Screw-in cartridge valves (SiCVs)

Introduction

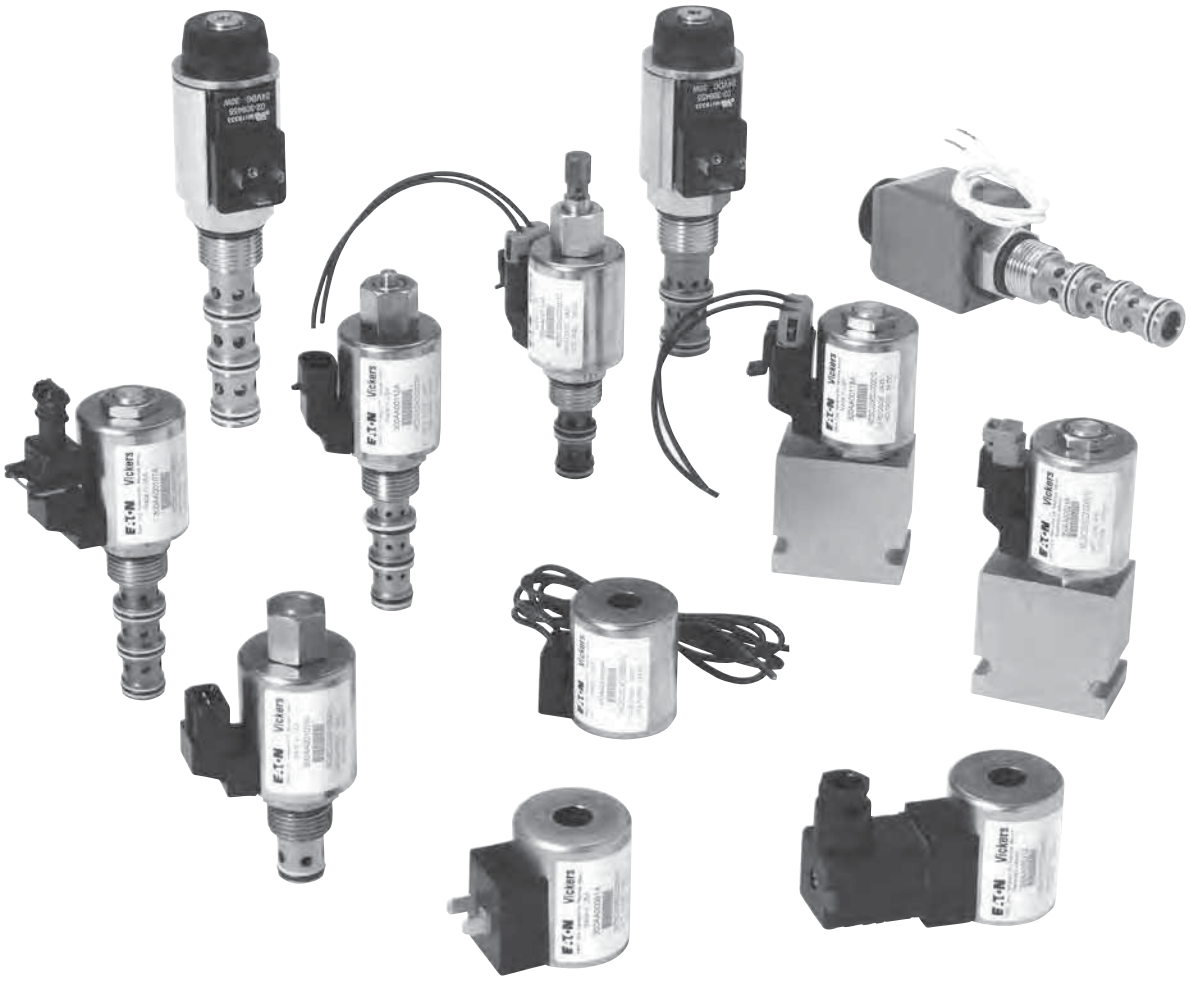

Powering Business Worldwide

Table of Contents

Introduction/ Valve Locator ..... **Ø-4 – Ø-63**
Solenoid Valves ..... **A-4 – A-206**
Proportional valves ..... **B-4 – A-89**
Coils & Electronic Controls ..... **C-5 – A-29**
Directional Controls ..... **D-4 – D-170**
Pressure Controls ..... **E-4 – E-130**
Motion Control Valves ..... **F-4 – F-140**
Check Valves ..... **G-4 – G-82**

Flow Controls ..... **H-4 – G-126**
Logic Elements ..... **I-4 – I-28**
Housing & Misc. Parts ..... **J-4 – J-33**
Circuit Makers ..... **K-4 – K-88**
Sandwich Valves ..... **L-4 – K-61**
Technical Reference ..... **M-4 – M-34**
Appendix ..... **N-4 – N-32**

Screw-in cartridge valves (SiCVs)

Screw-in cartridge valves (SiCVs) Ø-4
General information Ø-5
Hydraulic integrated circuits Ø-6
Aluminum and steel manifold packages Ø-8
Solenoid valves Ø-9
Proportional valves Ø-14
Directional controls Ø-17
Pressure controls Ø-22
Motion controls Ø-27
Check valves Ø-31
Flow controls Ø-33
Logic elements Ø-36
Circuit maker solutions Ø-37
Pressure control functions Ø-42
Check & pilot check functions Ø-45
Check and flow control functions Ø-46
Flow control functions Ø-47
Flow control & solenoid control functions Ø-48
Solenoid control functions Ø-49
Solenoid control & load control functions Ø-54
Spacer/blanking/linking plates Ø-55
Pressure control functions Ø-56
Check functions Ø-58
Flow control functions Ø-59
Solenoid control functions Ø-60
Load control functions Ø-62
Blanking and linking plates Ø-63

Screw-in cartridge valves (SiCVs)

Introduction

For over seventy years, the Vickers and Integrated Hydraulics brands have provided its customers with quality products and innovative solutions for all their power and motion control needs. The products featured in this catalog represent the very best in screw-in cartridge valve technology. Eaton is committed to maintaining this position by offering the most comprehensive range of cartridge valves for stationary and on/off highway equipment. This catalog gives detailed specifications for the entire line of Eaton's screw-in cartridge valves. Its purpose is to provide a quick, convenient reference tool when choosing cartridge valves or designing a system using these components. It is divided into sections according to valve function.

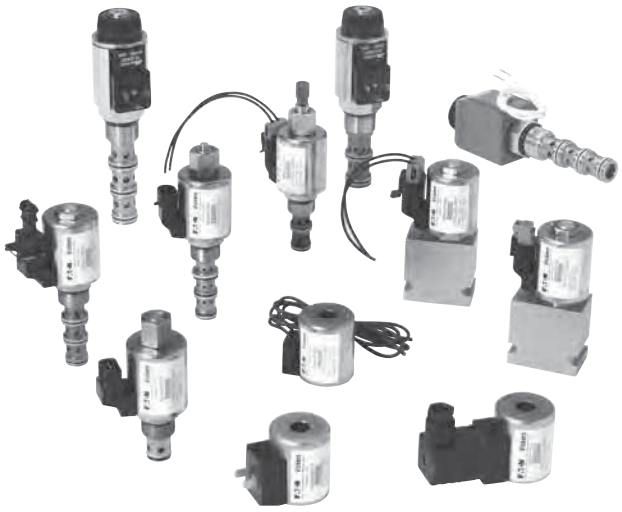

Hydraulic integrated circuits

Hydraulic Integrated Circuits (HICs) are valve packages containing combinations of screw-in cartridge valves in a manifold block. The package is dedicated to the hydraulic control of a particular application. HICs can be as extensive as necessary to meet the most complex applications or as simple as two or three cartridges in a basic single manifold.

All HIC packages are designed and manufactured by Eaton to customer specifications. Manifolds can be designed to hold the requisite cartridges, pilot pistons, orifice discs, or any other components needed for individual applications and integrated with other Eaton components. Standard cavity tooling provides precision machining of standard cartridge cavities.

Global support

Eaton's world-wide distribution and service network is quick, reliable, and responsive to the customer's needs. Our customers can rest assured that no matter where they're located, Eaton will be there with unrivaled products and technical expertise.

Technical support

Quality products are only part of Eaton's commitment to our customers. We also provide advisory, planning and design services specifically geared to your application and backed by on-time delivery.

Features and benefits

Eaton's screw-in cartridge valves provide many advantages over traditional hydraulic valves. While offering the same control functions as traditional hydraulic valves, screw-in cartridge valves are compact, reliable, and economical.

The concept of combining multiple cartridge valves in a common manifold offers both the mobile and industrial user substantial cost-saving advantages that cannot be achieved with traditional valving. Here are some of the advantages of Eaton cartridge valves:

- Response times and efficiency gains, by eliminating many of the hoses, tubes and fittings necessary in traditional installations
- Fewer potential leakage points than with conventional valves ensuring cleaner, safer application environments
- Compact and neat assemblies for economy of space and weight
- Increased ability to withstand vibration, giving optimum machine reliability and performance
- Multiple mounting configurations offers maximum design flexibility
- Greater contamination tolerance
- Faster cycle times
- Lower noise levels
- Faster on-sight servicing and troubleshooting
- Resistance to fluid contamination
- Hardened ground steel operating parts

Where measurements are critical request certified drawings. We reserve the right to change specifications without notice.

Materials

Cartridge bodies are manufactured from high grade cold drawn steel bar, with the internal working parts hardened and ground for maximum performance and durability. Our line bodies, Hydraulic Integrated Circuit blocks and special bodies are manufactured from high strength, wrought aluminum bar and mild steel or stainless steel, dependant upon the exact requirements of individual applications. Various specialized coatings/ finishes are obtainable for when environmentally unfriendly conditions are a consideration. For complete specifications and compatibilities, please consult our technical department.

It is recommended that for pressures above 210 bar (3000 psi) steel bodies are used. Whilst in most cases the aluminum bodies are strong enough, if transient peak pressures are encountered frequently, there is a possibility of fatigue.

Ports

The ports on all our bodies are BSP (parallel) and SAE O-ring and range in size from 1/4" to 1-1/4". NPT ports are available on request.

Seals

We use Nitrile as standard for temperatures of -30° C to +90° C (unless otherwise stated). Viton seals are available on request. Polyurethane seals are also available on some valves but care must be taken in their application with regard to fluid compatibility.

Temperature ranges

Temperature ranges quoted throughout this catalog relate to the seal material only. The viscosity index of the fluid should also be taken into account when selecting a valve. If in doubt please contact our technical department.

Fluids

Recommended fluid is mineral oil.

Note: All our test performances are carried out by using hydraulic oil with a viscosity of 21.8 or 32 cSt at 40°C. For water based fluids, i.e., 95/5 and 60/40 emulsion consult factory.

Filtration

Our valves utilize precision hydraulic components and we recommend a filtration level of between 15 and 25 microns, to produce a cleanliness level of ISO4406:2000 Class 18/16/13, dependent on the type of valve used. Replace filter elements regularly, try to avoid filter bypass condition - special attention should also be paid to filtration when first commissioning the system or machine, when contamination levels are high.

Tamperproof devices

Various tamperproofing methods are available upon request for our range of cartridges and valves.

Cartridge valve installation

The correct machining of cavities to suit our range of cartridges is critical. Cavity tools are available for sale or hire and certified drawings are available upon request. All drawings and information contained within this catalog are for guidance only. Where dimensions and actual valve usage is critical, please consult our technical department for full specifications and compatibilities. We reserve the right to alter specifications without notice or incurring obligation.

Note: It is important that each designer analyses all aspects of their application including consequences of any failure and review the information concerning the product or system in the current product catalog. The responsibility for final selection rests with the customer.

Torque figures

The torque values stated in this catalog are for testing purposes only. Assembly tightening torque depends on many factors, including lubrication, coating and surface finish. Contact main office for further information.

Adjustment

The adjustment range and Max setting figures shown throughout this catalog give the design range for each valve, higher or lower values may be attainable but should not be used without first contacting our Engineering department. Setting must ALWAYS be carried out using an appropriate gauge and it must NOT be assumed that screwing an adjuster to its maximum or minimum position will yield the maximum or minimum stated design setting for that valve.

Pressure equipment directive

All our pressure control valves are designed to be "Pressure Accessories" in accordance with article 3 section 3 of the Pressure Equipment Directive and Sound Engineering Practice and sold in good faith as such. For "Safety Accessories" as defined in article 3 section 1.4 of the Pressure Equipment Directive.

Note for products intended to be sold in European Economic Area: Please note that "safety devices" or other safety functions mentioned in any product literature are not necessarily "safety components" as defined by the Machinery Directive 2006/42/EC, unless otherwise state together with the CE mark and specific reference to said directive.

Limited warranty

Please see our website for details.

Hydraulic integrated circuits

High performance in one compact, efficient package

Customized solutions from a single source

Eaton is a major supplier of Hydraulic Integrated Circuits (HIC) manifold block systems. Application and use of HIC packages has spread across virtually every market and is a major growth area increasing at a rate 2 to 3 times the growth rate for the rest of the hydraulics industry.

Market trend forces are fueling growth away from line mounted valves to subplate mounted valves to, ultimately, HIC Manifold Valve Systems. Operating costs - reduced complexity, elimination of leakage, and improved serviceability - as well as initial installed cost factors - compact size, lower purchase cost, reduced customer engineering, fewer component parts and a higher level of integration - are contributing to this trend.

Market trends

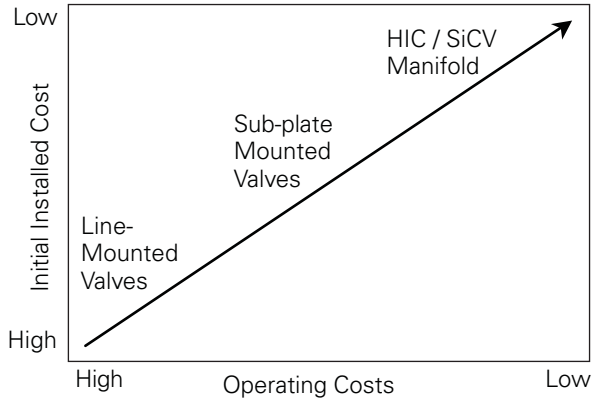

No leaks, no lines

HIC packages are created to meet specific circuit or installation requirements where two or more valves are required. The valves are packaged by hydraulic product suppliers, or OEMs, into either aluminum or steel blocks instead of using traditional cast iron individual in-line valve bodies. This permits the creation of compact, leak-free valve control system packages while eliminating the cost and time to connect the valves together with lines and fittings. This capability satisfies many application requirements where available space for hydraulic components is limited. HIC packages are ideally suited for a quick and easy, low cost hydraulic circuit which has repetitive applications. This requirement actually led to the development of the screw-in cartridge valve (SiCV) concept.

From screw-in cartridge valves to complete systems

SiCVs gained their initial market success and position in the agricultural equipment industry in the late 1960s. SiCV technology rapidly spread from the traditional basic valve control functions of flow pressure and direction to many specialty valve control functions that were not always practical or economical in the traditional cast iron housing configuration. From these modest but demanding beginnings in the agricultural vehicle and implement markets, the concept of packaging two or more valves to form a unique control system and/or subsystem quickly spread into other cost sensitive high volume markets. Examples include aerial work platforms, lift trucks, road pavers, road rollers, concrete pavers, small construct equipment vehicles, and mining equipment.

The evolution of the hic package

This technology has evolved from labor intensive, costly line and subplate mounted components to compact leakfree HIC packages.

Line mounted valves

Mounted sub-plate mounted

HIC package



Where measurements are critical request certified drawings. We reserve the right to change specifications without notice.

Hydraulic integrated circuits

High performance in one compact, efficient package

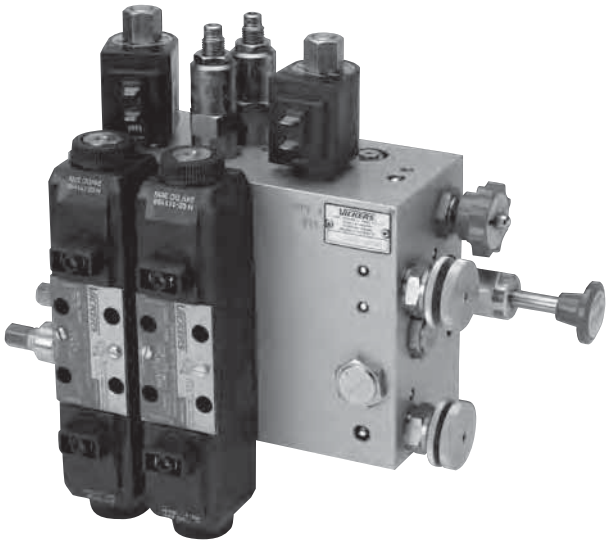

Better results in many applications

More industries are becoming aware of the advantages of HIC packages:

- Low installed cost
- Leak-free packaging
- Reduced hydraulic line clutter
- Smaller package size

As awareness increases, usage of HIC packages is spreading to specialty vehicles and machines including paper cutting machines, newspaper printing presses, tree removal/planting vehicles, and utility trucks.

As more and more HIC packages continue to appear in the marketplace the use has spread to encompass virtually every conceivable market where hydraulic systems can be applied.

Trouble-free installation and troubleshooting

The HIC package may be designed by Eaton or customers to satisfy specific performance or installation requirements. The key design feature is the combination of two or more control functions into a compact manifold block where internal passages eliminate the need for interconnecting lines and fittings between valves. The construction eliminates not only potential leakage points, but also the procurement, storage, handling and installation costs associated with traditional line mounted valve systems. The only lines and fittings required are those for the system inlet and return and the connections to the actuators being controlled. In addition, the HIC is a complete package with no time or procurement problems to complete the installation of the circuit due to the possible shortage of one or more valves. Conveniently located SICVs in a single manifold block provide faster field servicing and troubleshooting, maximizing machine utilization.

Features and benefits

- An efficient low maintenance system - the cartridge concept facilitates improved productivity from customized circuits
- Compact, unitized design-maximum savings on lines and fittings costs plus faster installation and system start up
- Fewer potential leakage points - ensure a cleaner, safer application environment
- Increase ability to withstand vibration - gives optimum machine reliability
- Faster response time and enhance efficiency - response time and power transmission efficiency gains by eliminating many of the hoses, tubes and fittings necessary in traditional installations
- Compact, neat assembly - provides space and weight savings
- Ability to manifold other valves such as Vickers Directional Controls DG valves & CMX valves - provides increased systems flexibility to control multiple and diverse actuators
- Components sourced from a single supplier - simplifies procurement processing and reduces acquisition costs



Where measurements are critical request certified drawings. We reserve the right to change specifications without notice.

Aluminum and steel manifold packages

with direct port stc connections

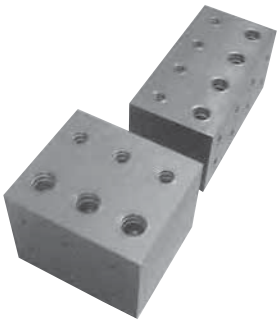

STC Ports in action

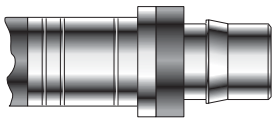

STC Hose/Connector

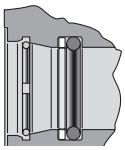

STC Port

Design features

- Positive round-wire style latching mechanism
- Swivels for installation, (in absence of pressure)
- Low profile, compact design
- Elastomeric o-ring seal –available in many materials
- Dual purpose dust seal/ release sleeve
- Simple stamped release tool for disconnecting
- Zinc plated steel construction

Benefits

- Fast reliable one-hand STC connections requiring no assembly tools
- Easy installation in confined areas
- Eliminates cross-threading, over-or under-torquing, and hose twisting
- Resists loosening when vibration is present
- Zero leak performance per SAE J1176
- Repairable seals for increased useful life
- Direct porting eliminates adapters to maximize cost savings
- Resists external contamination
- Design allows easy disconnection with release tool
- Ease of assembly for HICs with multiple ports in tight spaces

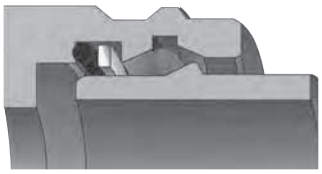

Male connector is inserted into the female connector. The male shoulder spreads the latch ring open.

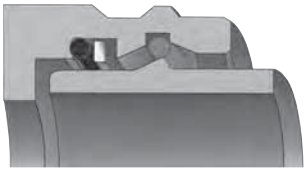

Latch ring is in its open position which allows the male shoulder to slide past the latch ring.

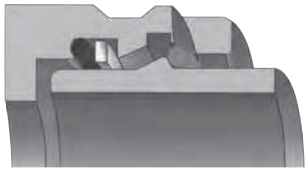

Male and female are locked into place. As fluid pressure is applied, the latch ring is wedged between the male shoulder and the female angle.

How to use STC

STC assembly action

Note: Always remember to verify that your STC connection has been made successfully by pulling the connection.

The proper connection and disconnection of STC is outlined in Bulletin JA535E.

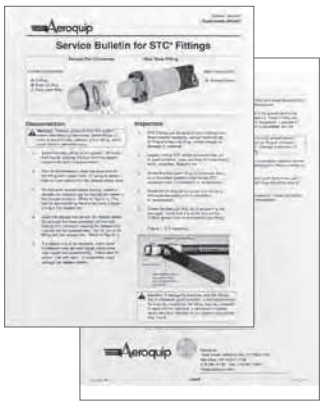

As the STC tool is inserted behind the release sleeve, the steel insert pushes the latching ring forward into a groove in the female half I.D., thus allowing the two halves to be pulled apart. The thickness of the tool moves the sleeve forward far enough to disconnect, so prying sideways with the tool is unnecessary.

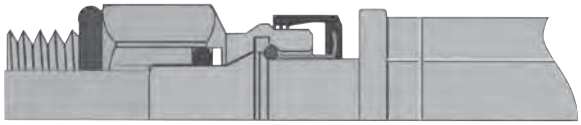

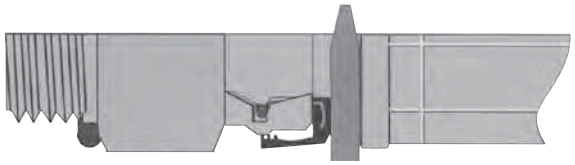

Where measurements are critical request certified drawings. We reserve the right to change specifications without notice.

Functional symbol

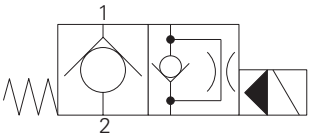

Model	Cavity	Flow rating	Typical pressure	Page
Solenoid 2/2, NC, poppet		**L/min (USgpm)**	**bar (psi)**	
SV5-8-C	C-8-2	23 (6)	210 (3000)	A-12
SV15-8-C	C-8-2	37 (10)	350 (5000)	A-14
SV1-10-C	C-10-2	45 (12)	210 (3000)	A-26
SV11-10-C	C-10-2	45 (12)	350 (5000)	A-28
SV12-10-C	C-10-2	23 (6)	350 (5000)	A-28

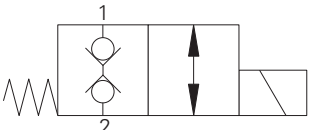

Model	Cavity	Flow rating	Typical pressure	Page
Solenoid 2/2, NC, bi-directional, poppet		**L/min (USgpm)**	**bar (psi)**	
SBV2-8-C	C-8-2	1 (0.25)	210 (3000)	A-16
SBV12-8-C	C-8-2	1 (0.25)	350 (5000)	A-18
S217A	A879	10 (2.6)	210 (3000)	A-20
S519A	A879	12 (3)	210 (3000)	A-22

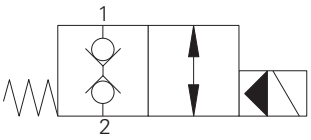

Model	Cavity	Flow rating	Typical pressure	Page
Solenoid 2/2, NC, bi-directional, poppet		**L/min (USgpm)**	**bar (psi)**	
SBV11-8-C	C-8-2	60 (15)	350 (5000)	A-24
SBV1-10-C	C-10-2	76 (20)	210 (3000)	A-26
SBV11-10-C	C-10-2	76 (20)	350 (5000)	A-28
SBV1-12-C	C-12-2/2U	114 (30)	210 (3000)	A-44
SBV11-12-C	C-12-2/2U	114 (30)	350 (5000)	A-46

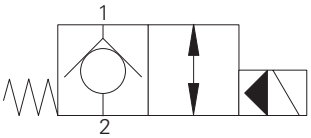

Model	Cavity	Flow rating	Typical pressure	Page
Solenoid 2/2, NC, poppet		**L/min (USgpm)**	**bar (psi)**	
SV3-8-C	C-8-2	23 (6)	210 (3000)	A-30
SV3-10-C	C-10-2	45 (12)	210 (3000)	A-32
SV13-10-C	C-10-2	45 (12)	350 (5000)	A-34
SV3-12-C	C-12-2	114 (30)	210 (3000)	A-40
SV13-12-C	C-12-2	114 (30)	350 (5000)	A-42
SV1-16-C	C-16-2	132 (35)	210 (3000)	A-48
SV13-16-C	C-16-2	132 (35)	350 (5000)	A-50
SV2-20-C	C-20-2	227 (60)	210 (3000)	A-52
SV13-20-C	C-20-2	227 (60)	350 (5000)	A-54

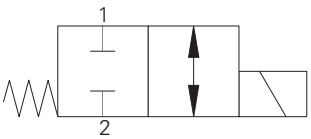

Model	Cavity	Flow rating	Typical pressure	Page
Solenoid 2/2, NC, spool		**L/min (USgpm)**	**bar (psi)**	
SV4-8-C	C-8-2	11 (3)	210 (3000)	A-56
SV14-8-C	C-8-2	11 (3)	350 (5000)	A-58
SV4-10-C	C-10-2	23 (6)	210 (3000)	A-60
SV14-10-C	C-10-2	23 (6)	350 (5000)	A-62

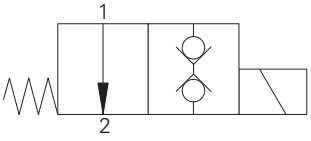

Model	Cavity	Flow rating	Typical pressure	Page
Solenoid 2/2, NO, poppet		**L/min (USgpm)**	**bar (psi)**	
S207	A879	1 (.25)	350 (5000)	A-64

Where measurements are critical request certified drawings. We reserve the right to change specifications without notice.

Solenoid valves

Valve locator

Functional symbol

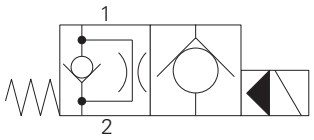

Model	Cavity	Flow rating	Typical pressure	Page
Solenoid 2/2, NO, poppet		**L/min (USgpm)**	**bar (psi)**	
SV5-8-0	C-8-2	23 (6)	210 (3000)	A-66
SV15-8-0	C-8-2	37 (10)	350 (5000)	A-68
SV5-10-0	C-10-2	45 (12)	210 (3000)	A-76
SV15-10-0	C-10-2	45 (12)	350 (5000)	A-78

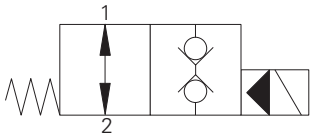

Model	Cavity	Flow rating	Typical pressure	Page
Solenoid 2/2, NO, bi-directional, poppet		**L/min (USgpm)**	**bar (psi)**	
SBV11-8-0	C-8-2	60 (15)	350 (5000)	A-70
SBV11-10-0	C-10-2	76 (20)	350 (5000)	A-82
SBV11-12-0	C-12-2/2U	114 (30)	350 (5000)	A-88

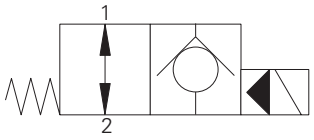

Model	Cavity	Flow rating	Typical pressure	Page
Solenoid 2/2, NO, poppet		**L/min (USgpm)**	**bar (psi)**	
SV3-8-0	C-8-2	23 (6)	210 (3000)	A-72
SV3-10-0	C-10-2	45 (12)	210 (3000)	A-74
SV13-10-0	C-10-2	45 (12)	350 (5000)	A-80
SV3-12-0	C-12-2/2U	114 (30)	210 (3000)	A-84
SV13-12-0	C-12-2/2U	114 (30)	350 (5000)	A-86
SV3-16-0	C-16-2	132 (35)	210 (3000)	A-90
SV13-16-0	C-16-2	132 (35)	350 (5000)	A-92
SV3-20-0	C-20-2	227 (60)	210 (3000)	A-94
SV13-20-0	C-20-2	227 (60)	350 (5000)	A-96

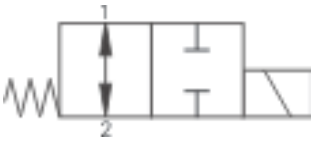

Model	Cavity	Flow rating	Typical pressure	Page
Solenoid 2/2, NO, spool		**L/min (USgpm)**	**bar (psi)**	
SV4-8-0	C-8-2	13 (4)	210 (3000)	A-98
SV14-8-0	C-8-2	13 (4)	350 (5000)	A-100
SV4-10-0	C-10-2	23 (6)	210 (3000)	A-102
SV14-10-0	C-10-2	23 (6)	350 (5000)	A-104

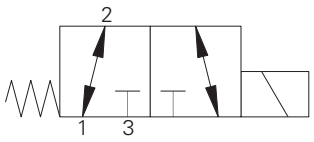

Model	Cavity	Flow rating	Typical pressure	Page
Solenoid 3/2, spool		**L/min (USgpm)**	**bar (psi)**	
SV4-8-3	C-8-3	13 (4)	210 (3000)	A-110
SV4-10-3	C-10-3	23 (6)	210 (3000)	A-128
S521N	C-10-3	44 (11)	210 (3000)	A--
SV4A/B-12-3	C-12-3	42 (11)	210 (3000)	A--
SV14A/B-12-3	C-12-3	42 (11)	350 (5000)	A-141

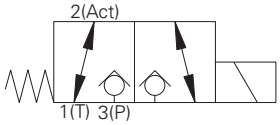

Model	Cavity	Flow rating	Typical pressure	Page
Solenoid 3/2, poppet		**L/min (USgpm)**	**bar (psi)**	
S229	A3531	12 (3)	210 (3000)	A-112

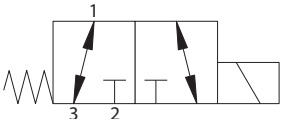

Model	Cavity	Flow rating	Typical pressure	Page
Solenoid 3/2, spool		**L/min (USgpm)**	**bar (psi)**	
S520H	C-10-3	40 (10)	210 (3000)	A-114

Where measurements are critical request certified drawings. We reserve the right to change specifications without notice.

Functional symbol

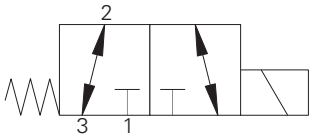

Model	Cavity	Flow rating	Typical pressure	Page
Solenoid 3/2, spool		**L/min (USgpm)**	**bar (psi)**	
S525H	C-10-3	30 (8)	210 (3000)	A-118

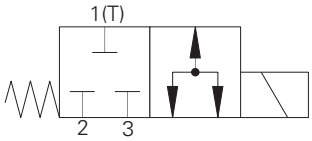

Model	Cavity	Flow rating	Typical pressure	Page
Solenoid 3/2, spool		**L/min (USgpm)**	**bar (psi)**	
S526N-2	C-10-3	35 (9)	210 (3000)	A-120

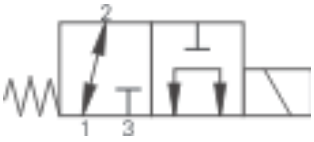

Model	Cavity	Flow rating	Typical pressure	Page
Solenoid 3/2, spool		**L/min (USgpm)**	**bar (psi)**	
SV1-8-3	C-8-3	11 (3)	210 (3000)	A-106
SV11-8-3	C-8-3	11 (3)	350 (5000)	A-108
SV1-10-3	C-10-3	23 (6)	210 (3000)	A-122
SV11-10-3	C-10-3	23 (6)	350 (5000)	A-124

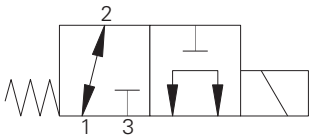

Model	Cavity	Flow rating	Typical pressure	Page
Solenoid 3/2, spool		**L/min (USgpm)**	**bar (psi)**	
SV11A/B-10-3	C-10-3	23 (6)	350 (5000)	A-126
SV1A/B-12-3	C-12-3	38-42 (10-11)	210 (3000)	A--
SV11A/B-12-3	C-12-3	38 (10)	350 (5000)	A--

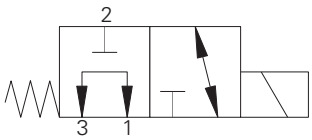

Model	Cavity	Flow rating	Typical pressure	Page
Solenoid 3/2, spool		**L/min (USgpm)**	**bar (psi)**	
SV2A/B-12-3	C-12-3	30-38 (8-10)	210 (3000)	A--
SV12A/B-12-3	C-12-3	30 (8)	350 (5000)	A--

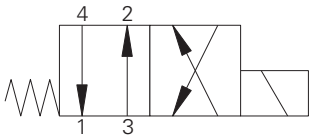

Model	Cavity	Flow rating	Typical pressure	Page
Solenoid 4/2, spool		**L/min (USgpm)**	**bar (psi)**	
SV1-8-4	C-8-4	11 (3)	210 (3000)	A-142
SV11-8-4	C-8-4	11 (3)	350 (5000)	A-144
SV1-10-4	C-10-4	23 (6)	210 (3000)	A-150
SV11-10-4	C-10-4	23 (6)	350 (5000)	A-154
S542	C-10-4	25 (9)	210 (3000)	A-152

Where measurements are critical request certified drawings. We reserve the right to change specifications without notice.

Solenoid valves

Valve locator

Functional symbol

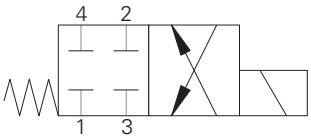

Model	Cavity	Flow rating	Typical pressure	Page
Solenoid 4/2, spool		**L/min (USgpm)**	**bar (psi)**	
SV2-8-4	C-8-4	13 (4)	210 (3000)	A-146
SV12-8-4	C-8-4	13 (4)	350 (5000)	A-148
SV2-10-4	C-10-4	23 (6)	210 (3000)	A-158
SV2A/B-12-4	C-12-4	42 (11)	210 (3000)	A--
SV12A/B-12-4	C-12-4	42 (11)	350 (5000)	A--
S541	C-10-4	30 (8)	210 (3000)	A-156

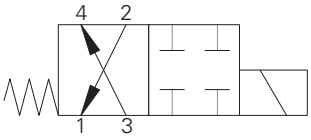

Model	Cavity	Flow rating	Typical pressure	Page
Solenoid 4/2, spool		**L/min (USgpm)**	**bar (psi)**	
SV3-10-4	C-10-4	23 (6)	210 (3000)	A-160
SV3A/B-12-4	C-12-4	53 (14)	210 (3000)	A--
SV13A/B-12-4	C-12-4	35 (14)	350 (5000)	A--

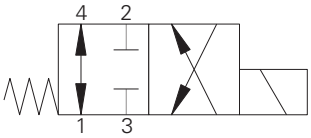

Model	Cavity	Flow rating	Typical pressure	Page
Solenoid 4/2, spool		**L/min (USgpm)**	**bar (psi)**	
SV4-10-4	C-10-4	23 (6)	210 (3000)	A-162

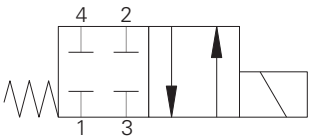

Model	Cavity	Flow rating	Typical pressure	Page
Solenoid 4/2, spool		**L/min (USgpm)**	**bar (psi)**	
SV5-10-4	C-10-4	23 (6)	210 (3000)	A-164
SV5A/B-12-4	C-12-4	46 (12)	210 (3000)	A-178
SV15A/B-12-4	C-12-4	53 (14)	350 (5000)	A-180

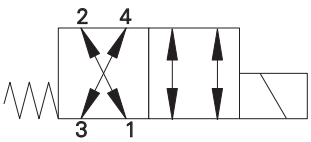

Model	Cavity	Flow rating	Typical pressure	Page
Solenoid 4/2, spool		**L/min (USgpm)**	**bar (psi)**	
SV17A/B-10-4	C-10-4	23 (6)	350 (5000)	A-184

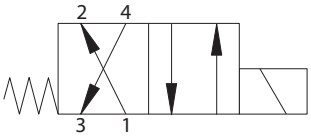

Model	Cavity	Flow rating	Typical pressure	Page
Solenoid 4/2, spool		**L/min (USgpm)**	**bar (psi)**	
SV7-10-4	C-10-4	17 (5)	210 (3000)	A-166
SV7A/B-12-4	C-12-4	46 (12)	210 (3000)	A-182
SV17A/B-12-4	C-12-4	46 (12)	350 (5000)	A-184

Where measurements are critical request certified drawings. We reserve the right to change specifications without notice.

Functional symbol

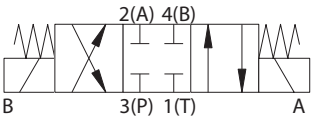

Model	Cavity	Flow rating	Typical pressure	Page
Solenoid 4/3, spool		**L/min (USgpm)**	**bar (psi)**	
SV9-8-E	C-8-4	13 (4)	210 (3000)	A-190
SV9-10-E	C-10-4	19(5)	210(3000)	A-194
SV9A-10-E	C-10-4	22 (5.8)	210 (3000)	A-198

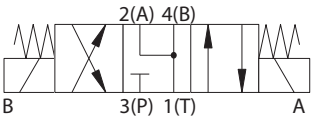

Model	Cavity	Flow rating	Typical pressure	Page
Solenoid 4/3, spool		**L/min (USgpm)**	**bar (psi)**	
SV9-8-F	C-8-4	13 (4)	210 (3000)	A-187
SV9-10-F	C-10-4	23 (6)	210 (3000)	A-195
SV9A-10-F	C-10-4	25 (6.5)	210 (3000)	A-199

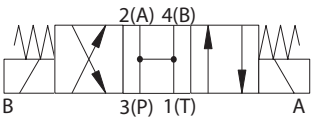

Model	Cavity	Flow rating	Typical Pressure	Page
Solenoid 4/3, spool		**L/min (USgpm)**	**bar (psi)**	
SV9-8-B	C-8-4	13.2 (3.5)	210 (3000)	A-188
SV9-10-B	C-10-4	23 (6)	210 (3000)	A-193
SV9A-10-B	C-10-4	34 (8.9)	210 (3000)	A-200

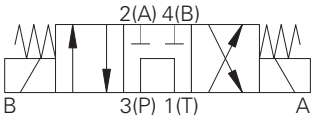

Model	Cavity	Flow rating	Typical pressure	Page
Solenoid 4/3, spool		**L/min (USgpm)**	**bar (psi)**	
SV9-8-A	C-8-4	11.0 (3.0)	210 (3000)	A-189
SV9-10-A	C-10-4	19 (5)	210 (3000)	A-192
SV9A-10-A	C-10-4	25 (6.5)	210 (3000)	A-201

Where measurements are critical request certified drawings. We reserve the right to change specifications without notice.

Proportional valves

Valve locator/section contents

Note: Proportional valve solenoid coils and electronic valve drivers are covered in section C of this Catalog.

Functional symbol

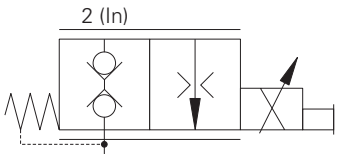

Model	Cavity	Flow rating	Typical pressure	Page
Proportional bi-directional poppet		**L/min (USgpm)**	**bar (psi)**	
PFR21H	A879	18 (5)	210 (3000)	B-8

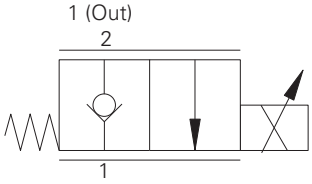

Model	Cavity	Flow rating	Typical pressure	Page
Proportional bi-directional poppet		**L/min (USgpm)**	**bar (psi)**	
EPV10	C-10-2	0-30 (0-8)	350 (5000)	B-10

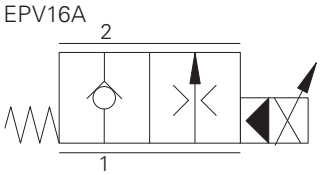

Model	Cavity	Flow rating	Typical pressure	Page
Proportional flow control, NC, poppet		**L/min (USgpm)**	**bar (psi)**	
EPV16A	C-16-3SU (undercut)	0-160	280 (4000)	B-17
EPV16B	C-16-3SU (undercut)	0-160	280 (4000)	B-18

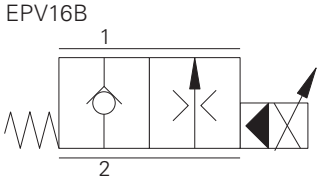

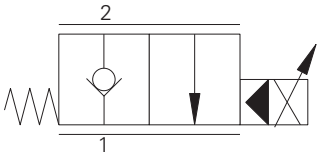

Model	Cavity	Flow rating	Typical pressure	Page
Proportional flow control, NC, poppet		**L/min (USgpm)**	**bar (psi)**	
ESV1-8-C	C-8-2	31 (9)	210 (3000)	B-20
ESV1-10-C	C-10-2	70 (19)	210 (3000)	B-22
ESV1-12-C	C-12-2	104 (27)	210 (3000)	B-24

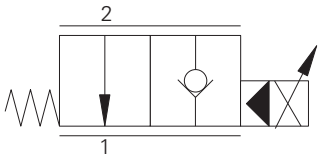

Model	Cavity	Flow rating	Typical pressure	Page
Proportional flow control, NO, poppet		**L/min (USgpm)**	**bar (psi)**	
ESV1-8-O	C-8-2	31 (9)	210 (3000)	B-26
ESV1-10-O	C-10-2	70 (19)	210 (3000)	B-28
ESV1-12-O	C-12-2	104 (27)	210 (3000)	B-30

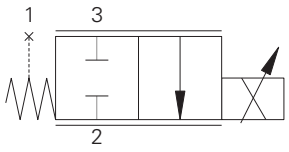

Model	Cavity	Flow rating	Typical pressure	Page
Proportional flow control, NC, spool		**L/min (USgpm)**	**bar (psi)**	
EFV1-10-C	C-10-3	38 (10)	210 (3000)	B-32
EFV1-12-C	C-12-3	77 (20)	210 (3000)	B-36

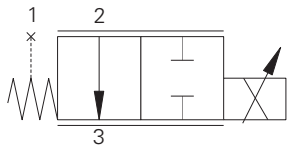

Model	Cavity	Flow rating	Typical pressure	Page
Proportional flow control, NO, spool		**L/min (USgpm)**	**bar (psi)**	
EFV1-10-O	C-10-3	30 (10)	210 (3000)	B-40
EFV1-12-O	C-12-3	104 (28)	210 (3000)	B-44

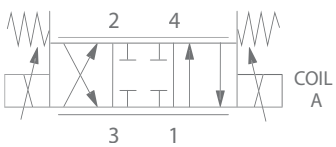

Model	Cavity	Flow rating	Typical pressure	Page
Proportional 4-way, 3-position flow control, NO, spool		**L/min (USgpm)**	**bar (psi)**	
ESV9-8				B-50
ESV9-10-E	C-10-4	22 (5.8)	250 (3600)	B-52

Where measurements are critical request certified drawings. We reserve the right to change specifications without notice.

Functional symbol

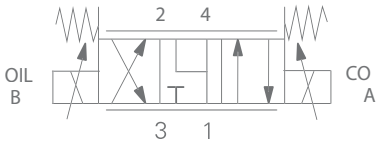

Model	Cavity	Flow rating	Typical pressure	Page
Proportional 4-way, 3-position flow control, NC, spool		**L/min (USgpm)**	**bar (psi)**	
ESV9-10-F	C-10-4	22 (5.8)	250 (3600)	B-52

E

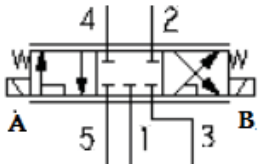

Model	Cavity	Flow rating	Typical pressure	Page
Proportional flow Control, NC, spool		**L/min (USgpm)**	**bar (psi)**	
ESVL9-10-E	C-10-5S	23 (2.9)	250 (3600)	B-53
ESVL9-10-F	C-10-5S	23 (2.9)	250 (3600)	B-54

F

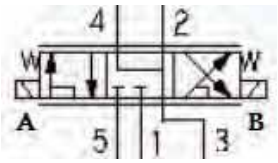

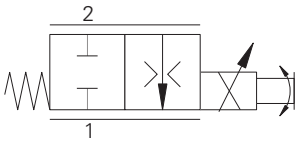

Model	Cavity	Flow rating	Typical pressure	Page
Proportional flow		**L/min (USgpm)**	**bar (psi)**	
PFR24A	A6701	18 (5)	210 (3000)	B-57

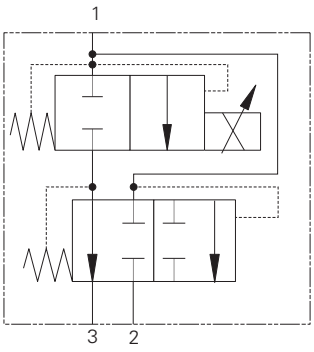

Model	Cavity	Flow rating	Typical pressure	Page
Proportional flow, NC, spool		**L/min (USgpm)**	**bar (psi)**	
EFV2-12-C	C-12-3	<114 (30)	210 (3000)	B-59

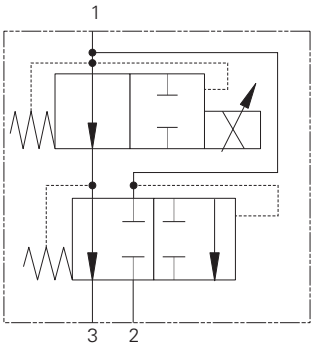

Model	Cavity	Flow rating	Typical pressure	Page
Proportional flow, NO, spool		**L/min (USgpm)**	**bar (psi)**	
EFV2-12-O	C-12-3	<114 (<30)	210 (3000)	B-63

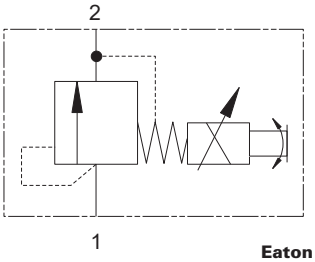

Model	Cavity	Flow rating	Typical pressure	Page
Proportional relief		**L/min (USgpm)**	**bar (psi)**	
PDR21A	A879	1.5 (.3)	350 (5000)	B-67

Where measurements are critical request certified drawings. We reserve the right to change specifications without notice.

Proportional valves

Valve locator/section contents

Functional symbol

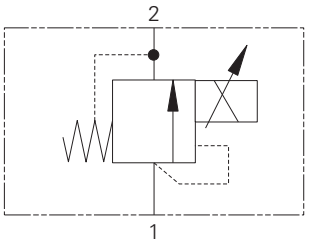

Model	Cavity	Flow rating	Typical pressure	Page
Proportional inverse relief, poppet		**L/min (USgpm)**	**bar (psi)**	
IRV1-10	C-10-2	1 (.25)	210 (3000)	B-69
IRV2-10	C-10-2	57 (15)	240 (3500)	B-71

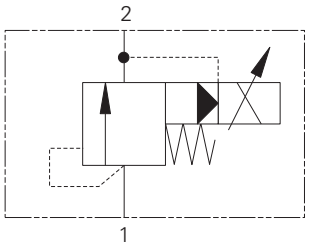

Model	Cavity	Flow rating	Typical pressure	Page
Proportional relief, spool		**L/min (USgpm)**	**bar (psi)**	
ERV1-10	C-10-2	<60 (15)	210 (3000)	B-73
ERV1-16	C-16-2	<132 (<39)	210 (3000)	B-75
EPPV5	TC06025	8 (2.1)	50 (725)	B-81
EPPV6	TC06023	8 (2.1)	50 (725)	B-83

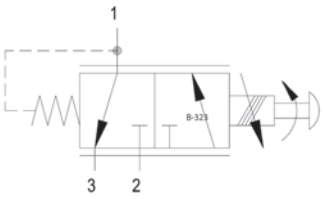

Model	Cavity	Flow rating	Typical pressure	Page
Proportional reducing/relief, spool		**L/min (USgpm)**	**bar (psi)**	
PPD22A	A879	20 (5)	210 (3000)	B-77
EPRV2-8	C-8-3	7.6 (2)	35 (500)	B-79

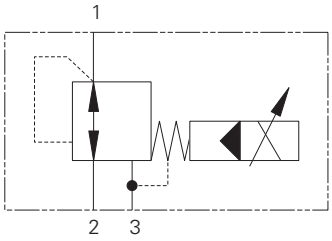

Model	Cavity	Flow rating	Typical pressure	Page
Proportional reducing/relief, spool		**L/min (USgpm)**	**bar (psi)**	
EPRV1-10	C-10-3	8 (2)	35 (500)	B-85
EPRV3-10	C-10-3	30 (8)	210 (3000)	B-87
EPRV1-16	C-16-3	7.6 (2)	35 (500)	B-89

Where measurements are critical request certified drawings. We reserve the right to change specifications without notice.

Functional symbol

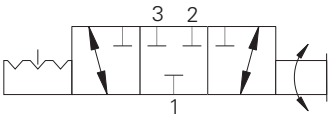

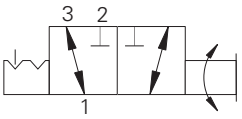

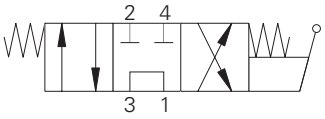

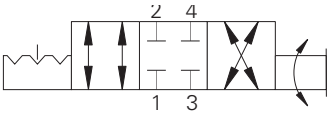

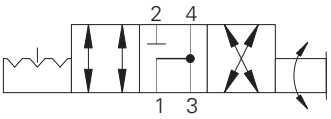

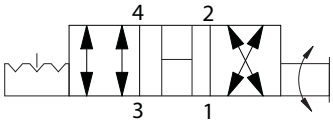

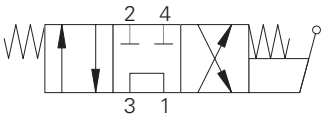

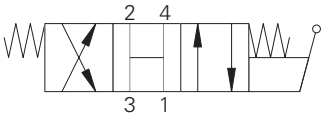

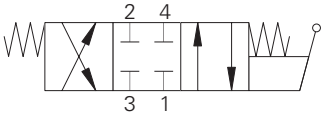

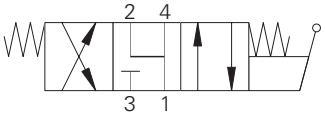

Model	Cavity	Flow rating	Typical pressure	Page
Manual rotary valve		**L/min (USgpm)**	**bar (psi)**	
MRV3-10	C-10-3	23 (6)	210 (3000)	D-10
MRV13-10	C-10-3	23 (6)	350 (5000)	D-12
MRV13-12	C-12-3	46 (12)	350 (5000)	D-14
MRV3-16	C-16-3	64 (17)	210 (3000)	D-16
MRV13-16	C-16-3	64 (17)	350 (5000)	D-18

Model	Cavity	Flow rating	Typical pressure	Page
Manual rotary valve		**L/min (USgpm)**	**bar (psi)**	
MRV4-10	C-10-4	11 (3)	210 (3000)	D-20
MRV14-10	C-10-4	11 (3)	350 (5000)	D-22
MRV14-12	C-12-4	23 (6)	350 (5000)	D-24
MRV4-16	C-16-4	45 (12)	210 (3000)	D-26
MRV14-16	C-16-4	45 (12)	350 (5000)	D-28

Model	Cavity	Flow rating	Typical pressure	Page
Manual rotary valve		**L/min (USgpm)**	**bar (psi)**	
MRV5-10	C-10-4	11 (3)	210 (3000)	D-30
MRV15-10	C-10-4	11 (3)	350 (5000)	D-32
MRV15-12	C-12-4	23 (6)	350 (5000)	D-34
MRV5-16	C-16-4	45 (12)	210 (3000)	D-36
MRV15-16	C-16-4	45 (12)	350 (5000)	D-38

Model	Cavity	Flow rating	Typical pressure	Page
Manual rotary valve		**L/min (USgpm)**	**bar (psi)**	
MRV6-10	C-10-4	11 (3)	210 (3000)	D-40
MRV6-16	C-16-4	11 (3)	300 (5000)	D-42

Model	Cavity	Flow rating	Typical pressure	Page
Manual rotary valve		**L/min (USgpm)**	**bar (psi)**	
MRV7-10	C-10-4	11 (3)	210 (3000)	D-44

Model	Cavity	Flow rating	Typical pressure	Page
Manual lever valve, spool		**L/min (USgpm)**	**bar (psi)**	
MLV9-12-A	C-12-4	60 (13.9)	210 (3000)	D-46

Model	Cavity	Flow rating	Typical pressure	Page
Manual lever valve, spool		**L/min (USgpm)**	**bar (psi)**	
MLV9-12-B	C-12-4	60 (15.9)	210 (3000)	D-47

Model	Cavity	Flow rating	Typical pressure	Page
Manual lever valve, spool		**L/min (USgpm)**	**bar (psi)**	
MLV9-12-E	C-12-4	60 (15.9)	210 (3000)	D-48

Model	Cavity	Flow rating	Typical pressure	Page
Manual lever valve, spool		**L/min (USgpm)**	**bar (psi)**	
MLV9-12-F	C-12-4	60 (15.9)	210 (3000)	D-49

Where measurements are critical request certified drawings. We reserve the right to change specifications without notice.

Directional controls

Valve locator

Functional symbol

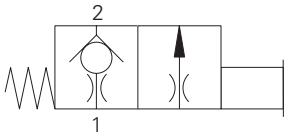

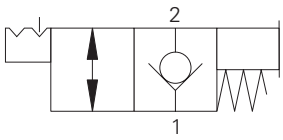

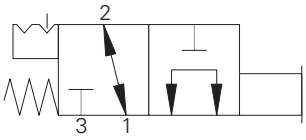

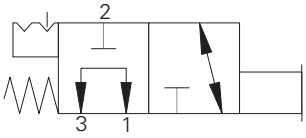

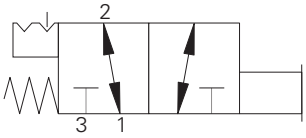

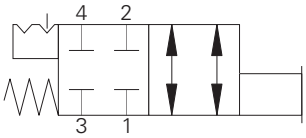

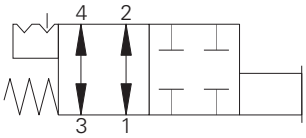

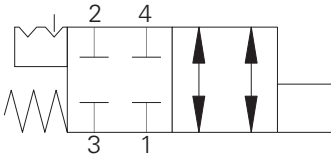

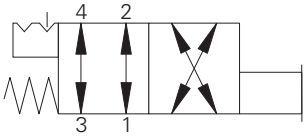

Model	Cavity	Flow rating	Typical pressure	Page
Check MO		**L/min (USgpm)**	**bar (psi)**	
3CP2	A879	5.5-15 (1.4-4)	210 (3000)	D-52

Model	Cavity	Flow rating	Typical pressure	Page
Manual pull valve, NC		**L/min (USgpm)**	**bar (psi)**	
MPV1-10	C-10-2	45 (12)	210 (3000)	D-54
MPV3-10	C-10-2	45 (12)	210 (3000)	D-56

Model	Cavity	Flow rating	Typical pressure	Page
Manual push valve		**L/min (USgpm)**	**bar (psi)**	
MSV1-12	C-12-3	41.8 (11)	210 (3000)	D-58
MSV11-10	C-10-3	23 (6)	350 (5000)	D-60
MSV11-12	C-12-3	30 (8)	350 (5000)	D-62
MSV12-12	C-12-3	38 (10)	350 (5000)	D-66

Model	Cavity	Flow rating	Typical pressure	Page
Manual push valve		**L/min (USgpm)**	**bar (psi)**	
MSV2-12	C-12-3	38 (10)	210 (3000)	D-64

Model	Cavity	Flow rating	Typical pressure	Page
Manual push valve		**L/min (USgpm)**	**bar (psi)**	
MSV5-12	C-12-3	41.8 (11)	210 (3000)	D-68
MSV15-12	C-12-3	41.8 (11)	350 (5000)	D-70

Model	Cavity	Flow rating	Typical pressure	Page
Manual push valve		**L/min (USgpm)**	**bar (psi)**	
MSV3-12	C-12-4	53.2 (14)	210 (3000)	D-72
MSV13-12	C-12-4	53.2 (14)	350 (5000)	D-74

Model	Cavity	Flow rating	Typical pressure	Page
Manual push valve		**L/min (USgpm)**	**bar (psi)**	
MSV4-12	C-12-4	53.2 (14)	210 (3000)	D-76
MSV14-12	C-12-4	53.2 (14)	350 (5000)	D-78

Model	Cavity	Flow rating	Typical pressure	Page
Manual push valve		**L/min (USgpm)**	**bar (psi)**	
MSV6-12	C-12-4	53.2 (14)	210 (3000)	D-80
MSV16-12	C-12-4	53.2 (14)	350 (5000)	D-82

Model	Cavity	Flow rating	Typical pressure	Page
Manual push valve		**L/min (USgpm)**	**bar (psi)**	
MSV17-10	C-12-4	20 (5.3)	350 (5000)	D-84
MSV7-12	C-12-4	45 (11.9)	210 (3000)	D-86
MSV17-12	C-12-4	20 (5)	350 (5000)	D-88

Where measurements are critical request certified drawings. We reserve the right to change specifications without notice.

Functional symbol

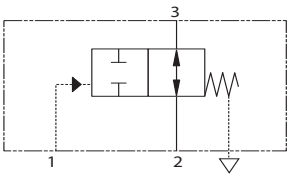

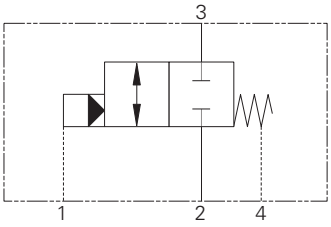

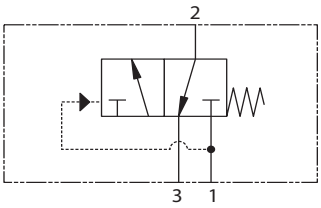

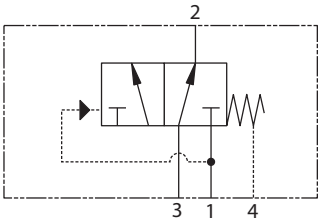

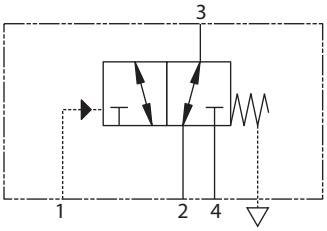

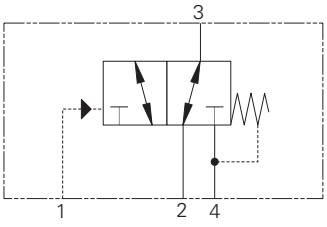

Model	Cavity	Flow rating	Typical pressure	Page
Pilot to shift 2/2 valve		**L/min (USgpm)**	**bar (psi)**	
PTS7-10	C-10-3	30 (8)	210 (3000)	D-90
PTS17-10	C-10-3	30 (8)	350 (5000)	D-92
PTS17-12	C-12-3	114 (30)	350 (5000)	D-94

Model	Cavity	Flow rating	Typical pressure	Page
Pilot to shift 2/2 valve		**L/min (USgpm)**	**bar (psi)**	
1RDS702	A21145	80 (20)	420 (6090)	D-100

Model	Cavity	Flow rating	Typical pressure	Page
Brake sequence		**L/min (USgpm)**	**bar (psi)**	
1SB10	A893	10 (2.5)	350 (5000)	D-96

Model	Cavity	Flow rating	Typical pressure	Page
Brake release shuttle		**L/min (USgpm)**	**bar (psi)**	
1SB304	A5302	30 (8)	350 (5000)	D-98

Model	Cavity	Flow rating	Typical pressure	Page
Pilot to shift valve		**L/min (USgpm)**	**bar (psi)**	
PTS1-10	C-10-4	30 (8)	210 (3000)	D-102
PTS11-12	C-12-4	76 (20)	350 (5000)	D-104
PTS11-10	C-10-4	30 (8)	350 (5000)	D-106
PTS1-16	C-16-4	132 (35)	210 (3000)	D-108
PTS11-16	C-16-4	132 (35)	350 (5000)	D-110
PTS1-20	C-20-4	265 (70)	210 (3000)	D-113

Model	Cavity	Flow rating	Typical pressure	Page
Pilot to shift valve		**L/min (USgpm)**	**bar (psi)**	
PTS12-10	C-10-4	30 (8)	350 (5000)	D-114
PTS12-12	C-12-4	114 (30)	350 (5000)	D-116
PTS2-16	C-16-4	132 (35)	210 (3000)	D-118
PTS12-16	C-16-4	132 (35)	350 (5000)	D-120
PTS2-20	C-20-4	265 (70)	210 (3000)	D-122

Where measurements are critical request certified drawings. We reserve the right to change specifications without notice.

Directional controls

Valve locator

Functional symbol

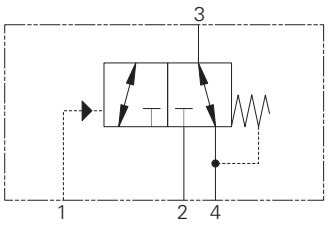

Model	Cavity	Flow rating	Typical pressure	Page
Pilot to shift valve		**L/min (USgpm)**	**bar (psi)**	
PTS13-10	C-10-4	30 (8)	350 (5000)	D-124
PTS13-12	C-12-4	114 (30)	350 (5000)	D-126
PTS3-16	C-16-4	132 (35)	210 (3000)	D-128
PTS13-16	C-16-4	132 (35)	350 (5000)	D-130
PTS3-20	C-20-4	265 (70)	210 (3000)	D-132
PTS6-16	C-16-4	132 (35)	210 (3000)	D-146
PTS16-16	C-16-4	132 (35)	350 (5000)	D-148

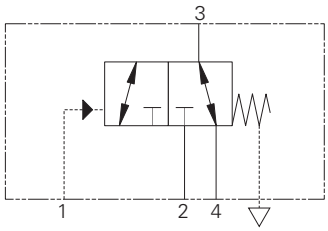

Model	Cavity	Flow rating	Typical pressure	Page
Pilot to shift valve		**L/min (USgpm)**	**bar (psi)**	
PTS14-12	C-12-4	114 (30)	350 (5000)	D-134
PTS14-16	C-16-4	132 (35)	350 (5000)	D-136
PTS5-16	C-16-4	132 (35)	210 (3000)	D-142
PTS15-16	C-16-4	132 (35)	350 (5000)	D-144

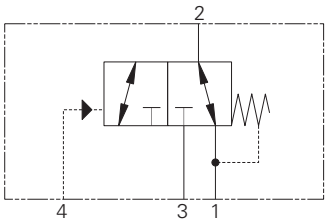

Model	Cavity	Flow rating	Typical pressure	Page
Pilot to shift valve		**L/min (USgpm)**	**bar (psi)**	
PTS5-10	C-10-3	11 (3)	210 (3000)	D-138
PTS15-12	C-12-3	105 (28)	350 (5000)	D-140

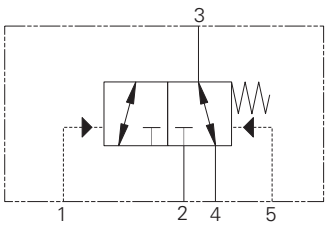

Model	Cavity	Flow rating	Typical pressure	Page
Pilot to shift valve		**L/min (USgpm)**	**bar (psi)**	
PTS9-8	C-8-5S	19 (5)	280 (4000)	D-150
PTS9-10	C-10-5S	38 (10)	280 (4000)	D-152
PTS9-12	C-12-5S	76 (20)	280 (4000)	D-154
PTS9-16	C-16-5S	151 (40)	280 (4000)	D-156
PTS9-20	C-20-5S	230 (60)	280 (4000)	D-158

Where measurements are critical request certified drawings. We reserve the right to change specifications without notice.

Functional symbol

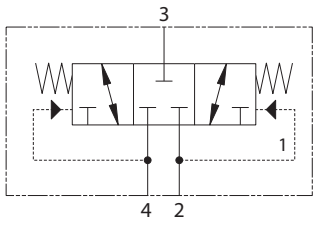

Model	Cavity	Flow rating	Typical pressure	Page
Sequence		**L/min (USgpm)**	**bar (psi)**	
DSV4-10	C-10-4	26 (6.9)	350 (5000)	D-160
DSV4-12	C-12-4	113 (29.9)	350 (5000)	D-162
DSV4-16	C-16-4	190 (50)	350 (5000)	D-164

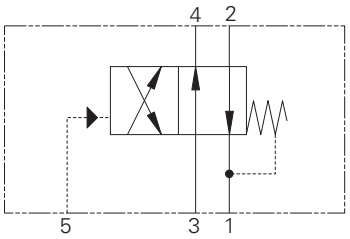

Model	Cavity	Flow rating	Typical pressure	Page
Pilot to shift valve		**L/min (USgpm)**	**bar (psi)**	
PTS6-10	C-10-4	23 (6)	210 (3000)	D-166
PTS16-10	C-10-4	23 (6)	350 (5000)	D-168
PTS16-12	C-12-4	76 (20)	350 (5000)	D-170

Where measurements are critical request certified drawings. We reserve the right to change specifications without notice.

Pressure controls

Valve locator

Functional symbol

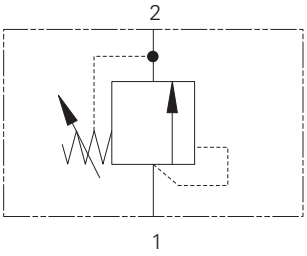

Model	Cavity	Flow rating	Typical pressure	Page
Relief valve, poppet		L/min (USgpm)	bar (psi)	
1DR2	A879	1.2 (0.3)	400 (5800)	E-10
1DR30	A879	30 (8)	400 (5800)	E-12
RV1-10	C-10-2	30 (8)	210 (3000)	E-14
RV1-12	C-12-2 (u)	114 (30)	350 (5000)	E-16

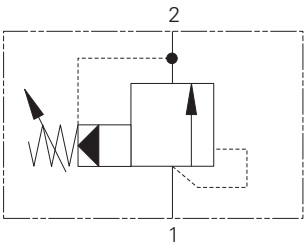

Model	Cavity	Flow rating	Typical pressure	Page
Relief valve, spool		L/min (USgpm)	bar (psi)	
RV5-10	C-10-2	114 (30)	350 (5000)	E-18
RV11-12	C-12-2 (u)	190 (50)	350 (5000)	E-20
1AR100	A881	150 (40)	400 (5800)	E-22
RV5-16	C-16-2	300 (80)	350 (5000)	E-24

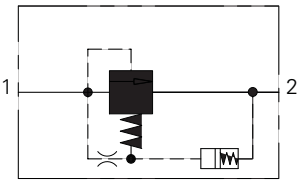

Model	Cavity	Flow rating	Typical pressure	Page
Shockless Relief Valve, Poppet		L/min (USgpm)	bar (psi)	
1ARD100	A881	100 (26)	210 (3000)	E-26

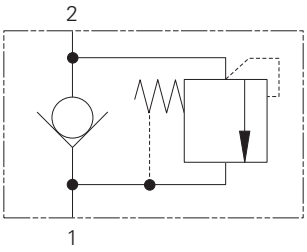

Model	Cavity	Flow Rating	Typical pressure	Page
Relief valve, poppet		L/min (USgpm)	bar (psi)	
RV4-10	C-10-2	1/45 (0.25/12)	350 (5000)	E-28

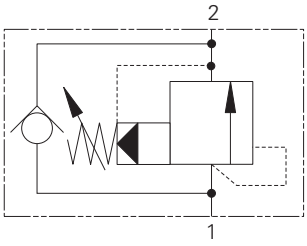

Model	Cavity	Flow rating	Typical pressure	Page
Relief valve, spool		L/min (USgpm)	bar (psi)	
RV2-10	C-10-2	12-114 (3-30)	350 (5000)	E-30
1ARC100	A881	150 (40)	400 (5800)	E-32

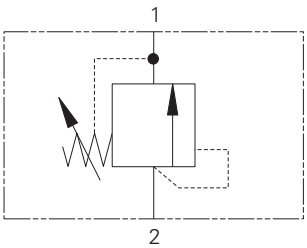

Model	Cavity	Flow rating	Typical pressure	Page
Relief valve, poppet		L/min (USgpm)	bar (psi)	
RV8-8	C-8-2	30 (8)	350 (5000)	E-34
RV3-10	C-10-2	76 (20)	250 (3600)	E-36
RV8-10	C-10-2	76 (20)	350 (5000)	E-38
RV3-12	C-12-2 (u)	132 (35)	350 (5000)	E-40
RV8-12	C-12-2 (u)	132 (35)	350 (5000)	E-42
RV8-16	C-16-2	300 (80)	350 (5000)	E-44
1LR300	A1126	380 (100)	350 (5000)	E-46

Where measurements are critical request certified drawings. We reserve the right to change specifications without notice.

Functional symbol

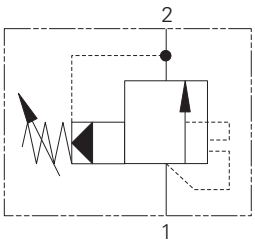

Model	Cavity	Flow rating	Typical pressure	Page
Relief valve, spool, unloading		L/min (USgpm)	bar (psi)	
1UAR100	A881	150 (40)	350 (5000)	E-48

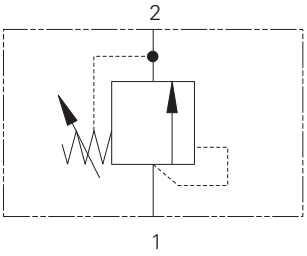

Model	Cavity	Flow rating	Typical pressure	Page
Relief valve, spool		L/min (USgpm)	bar (psi)	
1GR30	A881	30 (8)	160 (2300)	E-50
1GR60	CVA20-01-0	60 (16)	40 (600)	E-52
1GR100	A881	150 (40)	40 (600)	E-54

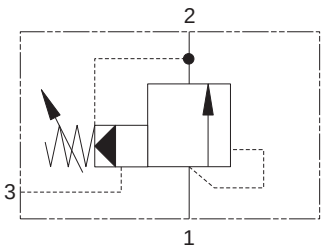

Model	Cavity	Flow rating	Typical pressure	Page
Relief ventable, spool		L/min (USgpm)	bar (psi)	
1VR100	A3146	100 (26)	350 (5000)	E-56
1VR200	A16102	200 (52)	350 (5000)	E-58

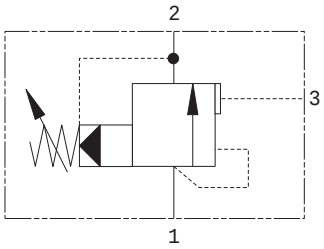

Model	Cavity	Flow rating	Typical pressure	Page
Unloading		L/min (USgpm)	bar (psi)	
1UL60	A3146	60 (16)	350 (5000)	E-60

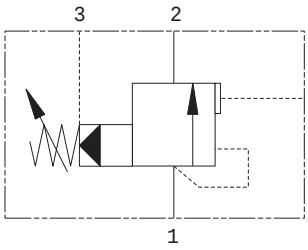

Model	Cavity	Flow rating	Typical pressure	Page
Unloading		L/min (USgpm)	bar (psi)	
1PUL60	A12088	60 (16)	350 (5000)	E-62
1PUL200	A3145	200 (52)	350 (5000)	E-64

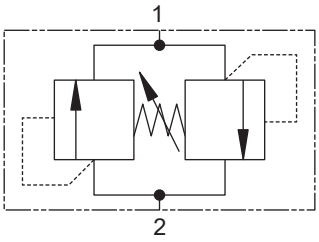

Model	Cavity	Flow rating	Typical pressure	Page
Relief dual		L/min (USgpm)	bar (psi)	
1CLLR50	C-10-2	50 (12)	250 (3625)	E-66
1CLLR100	A878	150 (40)	350 (5000)	E-68

Where measurements are critical request certified drawings. We reserve the right to change specifications without notice.

Pressure controls

Valve locator

Functional symbol

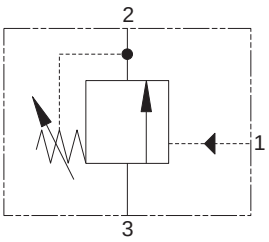

Model	Cavity	Flow rating	Typical pressure	Page
Pressure sequence valve, spool		**L/min (USgpm)**	**bar (psi)**	
PSV2-8	C-8-3	23 (6)	210 (3000)	E-70
PSV4-8	C-8-3	15 (4)	350 (5000)	E-72
PSV2-10	C-10-3	23 (6)	210 (3000)	E-78
PSV4-10	C-10-3	15 (4)	210 (3000)	E-80

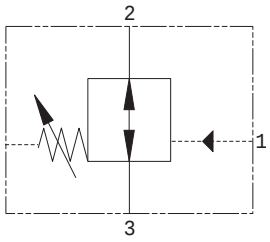

Model	Cavity	Flow rating	Typical pressure	Page
Series sequence valve, NO, spool		**L/min (USgpm)**	**bar (psi)**	
PSV8-10	C-10-4	23 (6)	210 (3000)	E-74

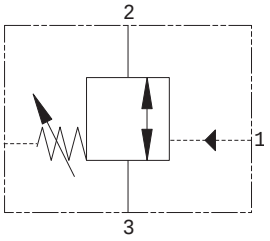

Model	Cavity	Flow rating	Typical pressure	Page
Series sequence valve, NC, spool		**L/min (USgpm)**	**bar (psi)**	
PSV10-10	C-10-4	23 (6)	210 (3000)	E-76

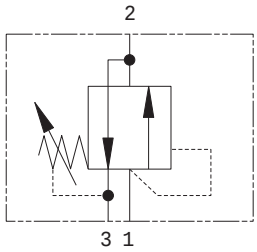

Model	Cavity	Flow rating	Typical pressure	Page
Series sequence valve, spool		**L/min (USgpm)**	**bar (psi)**	
PSV1-10	C-10-3	23 (6)	210 (3000)	E-82
PSV5-10	C-10-3	8 (2)	210 (3000)	E-84

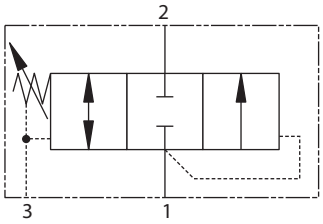

Model	Cavity	Flow rating	Typical pressure	Page
Series sequence valve, spool		**L/min (USgpm)**	**bar (psi)**	
PSV3-10	C-10-3	23 (6)	210 (3000)	E-86

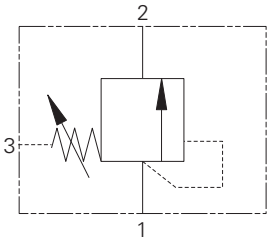

Model	Cavity	Flow rating	Typical pressure	Page
Series sequence valve, spool		**L/min (USgpm)**	**bar (psi)**	
PSV7-10	C-10-3	23 (6)	210 (3000)	E-88
1DS30	A880	30 (8)	140 (2000)	E-90
1DS60	CVA-22-06-0	60 (16)	40 (600)	E-92
1DS100	A880	150 (40)	40 (600)	E-94

Where measurements are critical request certified drawings. We reserve the right to change specifications without notice.

Functional symbol

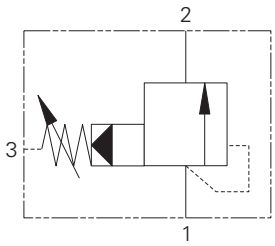

Model	Cavity	Flow rating	Typical pressure	Page
Series sequence valve, spool		L/min (USgpm)	bar (psi)	
1PS60	CVA-22-06-0	60 (16)	350 (5000)	E-96
1PS100	A880	150 (40)	350 (5000)	E-98
1PS200	A16102	250 (60)	350 (5000)	E-102
PSV11-16	C-16-3S	230 (60)	350 (5000)	E-104

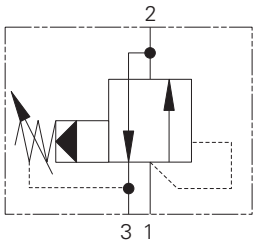

Model	Cavity	Flow rating	Typical pressure	Page
Series sequence valve, spool		L/min (USgpm)	bar (psi)	
PSV1-16	C-16-3	95 (25)	350 (5000)	E-100

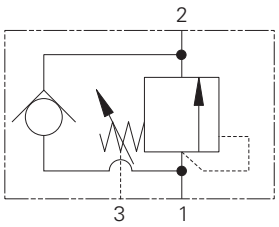

Model	Cavity	Flow rating	Typical pressure	Page
Series sequence valve, spool		L/min (USgpm)	bar (psi)	
1PSC30	A6610	30 (8)	350 (5000)	E-106

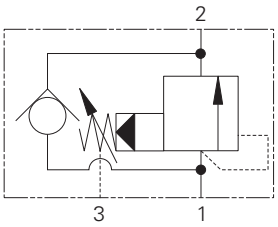

Model	Cavity	Flow rating	Typical pressure	Page
Series sequence valve, spool		L/min (USgpm)	bar (psi)	
1PSC100	A880	150 (40)	350 (5000)	E-108

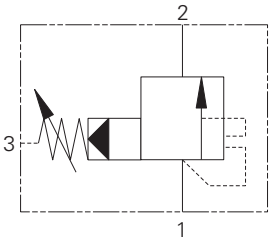

Model	Cavity	Flow rating	Typical pressure	Page
Series sequence valve, spool, unloading		L/min (USgpm)	bar (psi)	
1UPS100	A880	150 (40)	350 (5000)	E-110

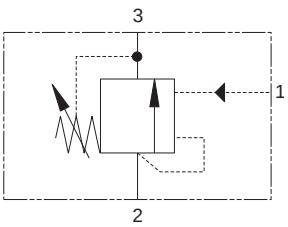

Model	Cavity	Flow rating	Typical pressure	Page
Pilot unloading valve		L/min (USgpm)	bar (psi)	
PUV3-10	C-10-3	4 (1)	210 (3000)	E-112

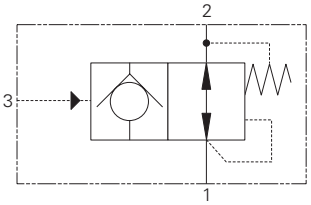

Model	Cavity	Flow Rating	Typical Pressure	Page
Accumulator discharge valve		L/min (USgpm)	bar (psi)	
ADV1-16	C-16-3S	30 (8)	210 (3000)	E-114

Where measurements are critical request certified drawings. We reserve the right to change specifications without notice.

Pressure controls

Valve locator

Functional symbol

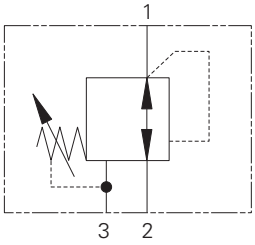

Model	Cavity	Flow rating	Typical pressure	Page
Pressure reducing valve, spool		**L/min (USgpm)**	**bar (psi)**	
PRV1-10	C-10-3	15 (4)	165 (2400)	E-116

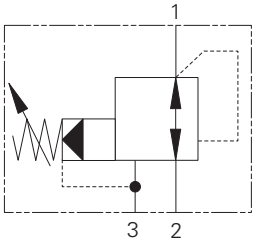

Model	Cavity	Flow rating	Typical pressure	Page
Pressure reducing valve, spool		**L/min (USgpm)**	**bar (psi)**	
PRV2-10	C-10-3	38 (10)	240 (3500)	E-118
PRV12-10	C-10-3	45 (12)	350 (5000)	E-120
PRV12-12	C-12-3	114 (30)	350 (5000)	E-122
PRV2-16	C-16-3	151 (40)	350 (5000)	E-126

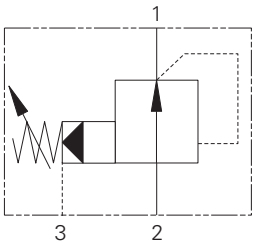

Model	Cavity	Flow rating	Typical pressure	Page
Pressure reducing valve, spool		**L/min (USgpm)**	**bar (psi)**	
1PA100	A880	100 (26)	10-350 (150-5000)	E-124
1PA200	A16102	200 (52)	350 (5000)	E-128

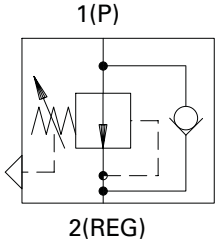

Model	Cavity	Flow rating	Typical pressure	Page
Pressure reducing valve with check		**L/min (USgpm)**	**bar (psi)**	
1PDC5	C-12-2	6 (1.5)	350 (5000)	E-130

Where measurements are critical request certified drawings. We reserve the right to change specifications without notice.

Functional symbol

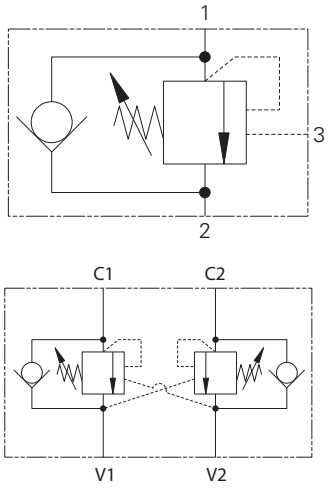

Model	Cavity	Flow rating	Typical pressure	Page
OCV standard		L/min (USgpm)	bar (psi)	
1CE20	A22903	20 (5)	270 (4000)	F-10
1CE30	A6610	30 (8)	270 (4000)	F-12
1CEH30	A6610	30 (8)	350 (5000)	F-14
1CE90	A12336	90 (23)	270 (4000)	F-30
1CEH90	A12336	90 (23)	350 (5000)	F-32
1CE120	A877	120 (32)	270 (4000)	F-48
1CE140	A20081	140 (37)	340 (4390)	F-58
1CE300	A6935	300 (80)	270 (4000)	F-64
1SE30	A20090-T11A	30 (8)	270 (4000)	F-76
1SE90	A20092-T2A	90 (23)	270 (4000)	F-84
1SE140	A20094-T17A	140 (37)	340 (4390)	F-92

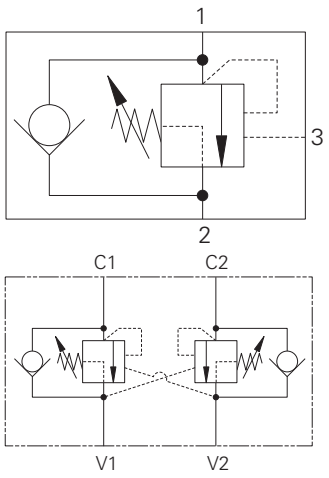

Model	Cavity	Flow rating	Typical pressure	Page
OCV part balanced		L/min (USgpm)	bar (psi)	
1CER30	A6610	30 (8)	270 (4000)	F-16
1CERH30	A6610	30 (8)	350 (5000)	F-18
1CER90	A12336	90 (23)	270 (4000)	F-34
1CERH90	A12336	90 (23)	350 (5000)	F-36
1CER140	A20081	140 (37)	340 (4390)	F-60
1SER30	A20090-T11A	30 (8)	270 (4000)	F-78
1SER90	A20092-T2A	90 (23)	270 (4000)	F-86
1SER140	A20094-T17A	140 (37)	340 (4390)	F-96

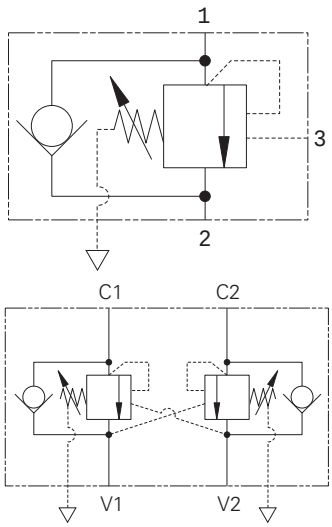

Model	Cavity	Flow rating	Typical pressure	Page
OCV fully balanced		L/min (USgpm)	bar (psi)	
1CEB30	A6610	30 (8)	270 (4000)	F-20
1CEB90	A12336	90 (23)	270 (4000)	F-38
1CEB120	A877	120 (32)	270 (4000)	F-50
1CEB300	A6935	300 (80)	270 (4000)	F-66
1SEB30	A20090-T11A	30 (8)	270 (4000)	F-80
1SEB90	A20092-T2A	90 (23)	270 (4000)	F-88

Where measurements are critical request certified drawings. We reserve the right to change specifications without notice.

Motion controls

Valve locatorh

Functional symbol

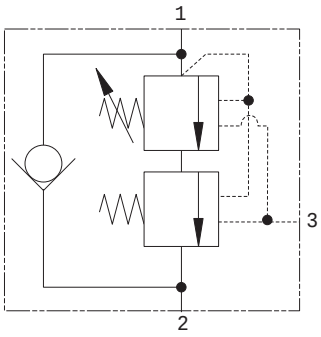

Model	Cavity	Flow rating	Typical pressure	Page
OCV counterbalanced		L/min (USgpm)	bar (psi)	
1CEL30	A6610	30 (8)	380 (5510)	F-24
1CEL90	A12336	90 (23)	380 (5510)	F-42
1CEL140	A20081	140 (37)	380 (5510)	F-62
1SEL30	A20090-T11A	30 (8)	380 (5510)	F-82
1SEL90	A20092-T2A	90 (23)	380 (5510)	F-90
1SEL140	A20094-T17A	140 (37)	380 (5310)	F-96

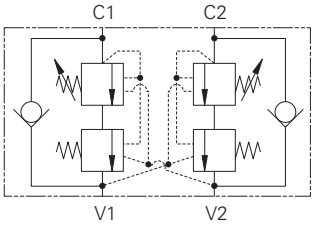

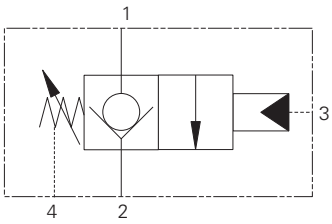

Model	Cavity	Flow rating	Typical pressure	Page
OCV zero differential		L/min (USgpm)	bar (psi)	
1CPBD30	AXP 20530	30 (8)	350 (5000)	F-26
1CPBD90	A12196	90 (23)	350 (5000)	F-44
1CPBD120	A6726	180 (47)	400 (5800)	F-54
1CPBD300	A13098	300 (80)	400 (5800)	F-70

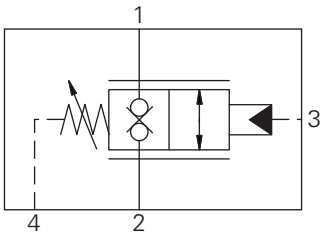

Model	Cavity	Flow rating	Typical pressure	Page
OCV normally closed zero differential		L/min (USgpm)	bar (psi)	
1CPPD90	A12196	90 (23)	350 (5000)	F-46
1CPPD300	A13098	300 (80)	350 (5000)	F-72

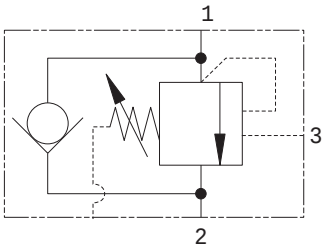

Model	Cavity	Flow rating	Typical pressure	Page
OCV fully balanced		L/min (USgpm)	bar (psi)	
1CEBD30	A20530	30 (8)	350 (5000)	F-22
1CEBD90	A12196	90 (23)	270 (4000)	F-40
1CEBD120	A6726	180 (47)	270 (4000)	F-52
1CEBD300	A13098	300 (80)	270 (4000)	F-68

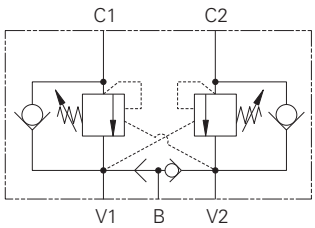

Model	Cavity			
Motion control valve, with brake shuttle		L/min (USgpm)	bar (psi)	Page
1CEESH35		30 (8)	270 (4000)	F-98
1CEESH95		90 (23)	270 (4000)	F-100
1CEESH150		150 (40)	270 (4000)	F-102
1CEESH350		300 (80)	270 (4000)	F-104

Where measurements are critical request certified drawings. We reserve the right to change specifications without notice.

Functional symbol

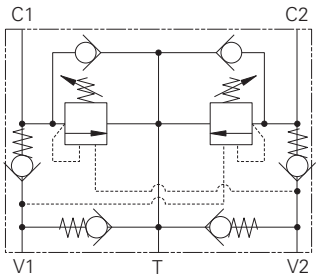

Model	Cavity	Flow rating	Typical pressure	Page
Motion control valve & lock		**L/min (USgpm)**	**bar (psi)**	
1CEEC35		30 (8)	270 (4000)	F-106
1CEEC95		95 (25)	270 (4000)	F-108
1CEEC150		150 (40)	270 (4000)	F-110
1CEEC350		300 (80)	270 (4000)	F-112

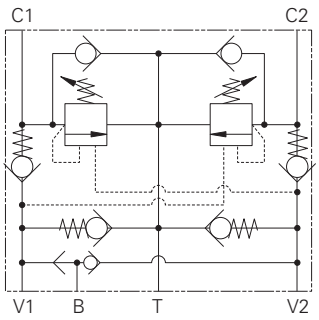

Model	Cavity	Flow rating	Typical pressure	Page
Motion control valve & lock with brake shuttle		**L/min (USgpm)**	**bar (psi)**	
1CEECSH35		30 (8)	270 (4000)	F-114
1CEECSH95		95 (25)	270 (4000)	F-116
1CEECSH150		150 (40)	270 (4000)	F-118
1CEECSH350		350 (80)	270 (4000)	F-120

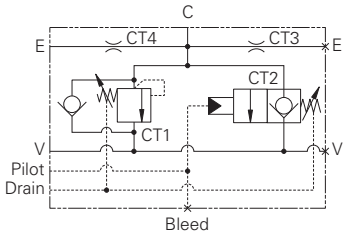

Model	Cavity	Flow rating	Typical pressure	Page
BoomLoc		**L/min (USgpm)**	**bar (psi)**	
1CEBL256		250 (66)	350 (5000)	F-124
1CEBL356		350 (92)	350 (5000)	F-126

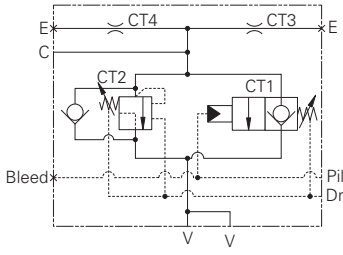

Model	Cavity	Flow rating	Typical pressure	Page
BoomLoc		**L/min (USgpm)**	**bar (psi)**	
1CEBL556		550 (145)	400 (5800)	F-128

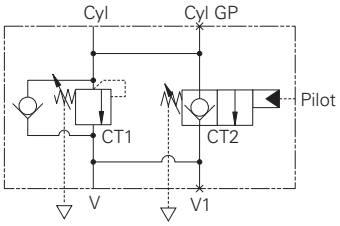

Model	Cavity	Flow rating	Typical pressure	Page
BoomLoc		**L/min (USgpm)**	**bar (psi)**	
1CEBL31F3W35P		30 (8)	350 (5000)	F-130

Where measurements are critical request certified drawings. We reserve the right to change specifications without notice.

Motion controls

Valve locator

Functional symbol

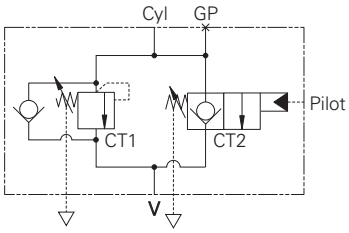

Model	Cavity	Flow rating	Typical pressure	Page
BoomLoc		L/min (USgpm)	bar (psi)	
1CEBL31F1/2635P		30 (8)	350 (5000)	F-133

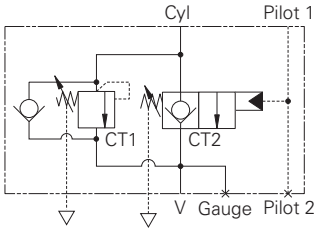

Model	Cavity	Flow rating	Typical pressure	Page
BoomLoc		L/min (USgpm)	bar (psi)	
1CEBL31F4W35P		30 (8)	350 (5000)	F-135

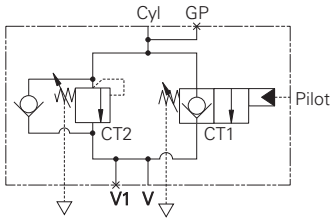

Model	Cavity	Flow rating	Typical pressure	Page
BoomLoc		L/min (USgpm)	bar (psi)	
1CEBL91F4W35P		90 (24)	350 (5000)	F-136

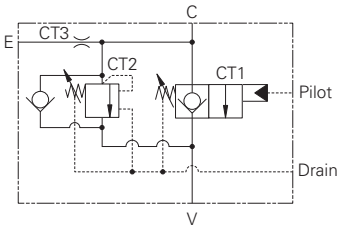

Model	Cavity	Flow rating	Typical pressure	Page
BoomLoc		L/min (USgpm)	bar (psi)	
1CEBL151F4W35P		150 (40)	350 (5000)	F-138

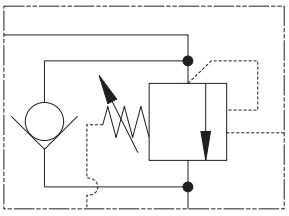

Model	Cavity	Flow rating	Typical pressure	Page
BoomLoc		L/min (USgpm)	bar (psi)	
1CEBL153F4W35P		150 (40)	350 (5000)	F-140

Where measurements are critical request certified drawings. We reserve the right to change specifications without notice.

Functional symbol

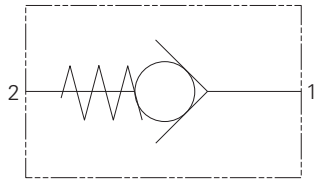

Model	Cavity	Flow rating	Typical pressure	Page
Check valve, direct		L/min (USgpm)	bar (psi)	
FPR1/4	Inline	12 (3)	350 (5000)	G-8
FPR3/8	Inline	30 (8)	350 (5000)	G-8
FPR1/2	Inline	45 (12)	350 (5000)	G-8
FPR3/4	Inline	85 (22)	300 (4300)	G-8
FPR1	Inline	140 (37)	250 (3600)	G-8
FPR11/4	Inline	220 (58)	250 (3600)	G-8
FPR11/2	Inline	310 (82)	210 (3000)	G-8
3CA20	A879	40 (10)	350 (5000)	G-10
CV3-4	C-4-2	7.6 (2)	350 (5000)	G-12
CV3-8	C-8-2	30 (8)	350 (5000)	G-14
CV3-10	C-10-2	76 (20)	210 (3000)	G-16
CV13-10	C-10-2	76 (20)	350 (5000)	G-16
CV11-12	C-12-2 (u)	114 (30)	350 (5000)	G-20
CV1-16	C-16-2	151 (40)	210 (3000)	G-22
CV11-16	C-16-2	151 (40)	350 (5000)	G-22
CV2-20	C-20-2	227 (60)	210 (3000)	G-24
3CA300	C-20-2	300 (80)	350 (5000)	G-26

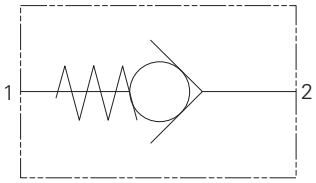

Model	Cavity	Flow rating	Typical pressure	Page
Check valve, direct		L/min (USgpm)	bar (psi)	
CV16-10	C-10-2	76 (20)	350 (5000)	G-30

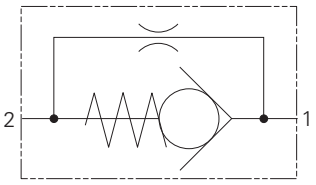

Model	Cavity	Flow rating	Typical pressure	Page
Check valve, with bypass orifice		L/min (USgpm)	bar (psi)	
CV6-4	C-4-2	7.5 (2)	350 (5000)	G-28
CV6-10	C-10-2	76 (20)	350 (5000)	G-30
CV6-16	C-16-2	151 (40)	210 (3000)	G-34

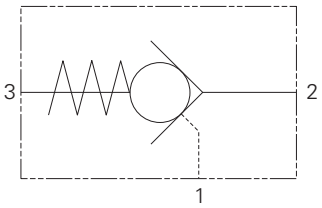

Model	Cavity	Flow rating	Typical pressure	Page
Check valve, pilot-to-open		L/min (USgpm)	bar (psi)	
SPC2-8	C-8-3	19 (5)	240 (3500)	G-38
SPC2-10	C-10-3	23 (6)	240 (3500)	G-40

Where measurements are critical request certified drawings. We reserve the right to change specifications without notice.

Check valves

Valve locator

Functional symbol

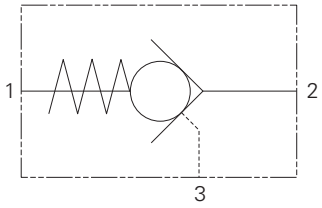

Model	Cavity	Flow rating	Typical pressure	Page
Check valve, pilot-to-open		**L/min (USgpm)**	**bar (psi)**	
4CK30	A6610	30 (8)	350 (5000)	G-42
4CK90	A12336	90 (24)	350 (5000)	G-44
4CKD90	A12336	90 (24)	420 (6000)	G-46
4CK120	A877	120 (32)	350 (5000)	G-48
4CK300	A6935	300 (80)	350 (5000)	G-50
4SK30	A20090-T11A	30 (8)	350 (5000)	G-54
4SK90	A20092-T2A	90 (24)	350 (5000)	G-56
4SK140	A20094-T17A	140 (37)	350 (5000)	G-58
4KD25	Inline	25 (6)	700 (10000)	G-64

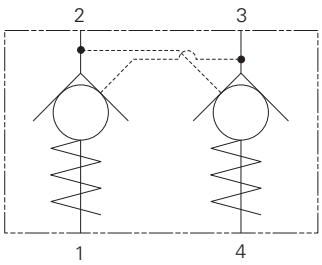

Model	Cavity	Flow rating	Typical pressure	Page
Dual pilot checks		**L/min (USgpm)**	**bar (psi)**	
DPC2-8	C-8-4	19 (5)	240 (3500)	G-60

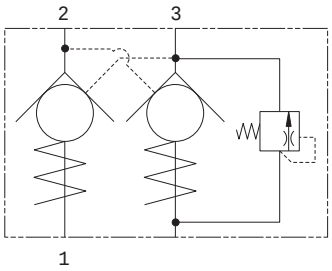

Model	Cavity	Flow rating	Typical pressure	Page
Dual pilot checks with thermal relief		**L/min (USgpm)**	**bar (psi)**	
4CKKT50	A12744	25 (6.6)	300 (4350)	G-62

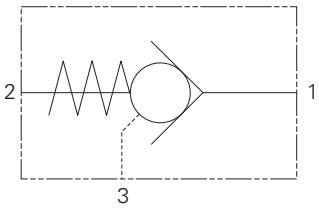

Model	Cavity	Flow rating	Typical pressure	Page
Check valve, pilot-to-close		**L/min (USgpm)**	**bar (psi)**	
5CK30	A6610	30 (8)	350 (5000)	G-66
5CK120	A877	120 (32)	350 (5000)	G-68
5CK300	A6935	250 (65)	350 (5000)	G-70

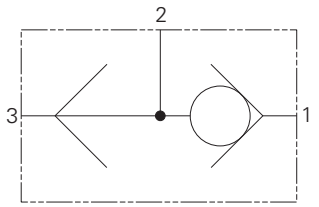

Model	Cavity	Flow rating	Typical pressure	Page
Shuttle		**L/min (USgpm)**	**bar (psi)**	
1SH10	A16927	20 (5)	350 (5000)	G-72
1SH60	C-I-M18-3	50 (13)	350 (5000)	G-74
DSV1-10	C-10-3	23 (6)	210 (3000)	G-76
DSV2-4	C-4-3	3 (.75)	240 (3500)	G-78
DSV2-8	C-8-3	23 (6)	240 (3500)	G-80
DSV3-XX-B	Inline	170 (45)	350 (5000)	G-82

Where measurements are critical request certified drawings. We reserve the right to change specifications without notice.

Functional symbol

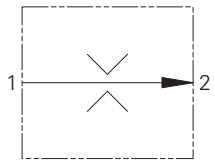

Model	Cavity	Flow rating	Typical pressure	Page
Flow regulator valve, fixed		L/min (USgpm)	bar (psi)	
FR5-8	C-8-2	10 (25)	280 (4000)	H-10
FR5-10	C-10-2	23 (6)	280 (4000)	H-12
FR1-16	C-16-2	114 (30)	210 (3000)	H-14
FR1-20	C-20-2	227 (60)	210 (3000)	H-16

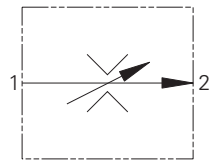

Model	Cavity	Flow rating	Typical pressure	Page
Flow regulator valve, adjustable		L/min (USgpm)	bar (psi)	
FR2-10	C-10-2	38 (10)	210 (3000)	H-18
FR2-16	C-16-2	114 (30)	210 (3000)	H-20

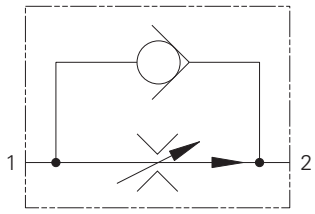

Model	Cavity	Flow rating	Typical pressure	Page
Flow regulator with check		L/min (USgpm)	bar (psi)	
2CFRC60	A7447	4-60 (1-16)	350 (5000)	H-22
FAR1-10	C-10-2	1-38 (0.25-10)	310 (4500)	H-24
FAR1-12	C-12-2(u)	1.5-95 (0.4-25)	310 (4500)	H-26
FAR1-16	C-16-2	3.8-114 (1-30)	310 (4500)	H-28

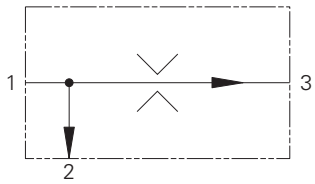

Model	Cavity	Flow rating	Typical pressure	Page
Priority flow regulator, bypass, fixed		L/min (USgpm)	bar (psi)	
PFR5-8	C-8-3	<10 (2.5)	280 (4000)	H-32
PFR5-10	C-10-3	<23 (6)	280 (4000)	H-34
PFR15-10	C-10-3	<38 (10)	350 (5000)	H-36
PFR11-12	C-12-3	<30 (8)	350 (5000)	H-38
PFR11-16	C-16-3	<114 (30)	350 (5000)	H-40

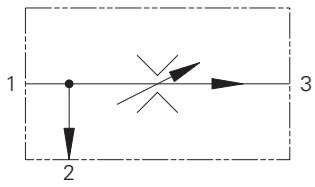

Model	Cavity	Flow rating	Typical pressure	Page
Priority flow regulator, bypass, adjustable		L/min (USgpm)	bar (psi)	
2CFP60	CVA-27-04-0	<60 (16)	350 (5000)	H-42
PFR2-10	C-10-3	<60 (15)	210 (3000)	H-30
PFR12-10	C-10-3	<64 (17)	350 (5000)	H-44
PFR12-12	C-12-3	<45 (12)	350 (5000)	H-46
PFR2-16	C-16-3	<114 (30)	210 (3000)	H-48
PFR12-16	C-16-3	<114 (30)	350 (5000)	H-50

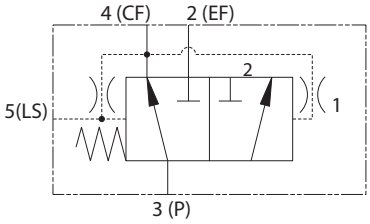

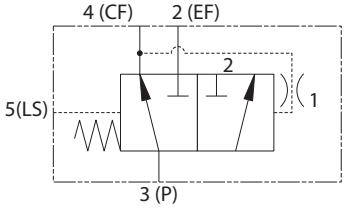

Model	Cavity	Flow rating	Typical pressure	Page
Priority flow regulator		L/min (USgpm)	bar (psi)	
PFRD/S-12	C-12-5S	76 (20)	280 (4000)	H-52
PFRD/S-16	C-16-5S	150 (40)	280 (4000)	H-54
PFRD/S-20	C-20-5S	230 (60)	240 (3500)	H-56

Where measurements are critical request certified drawings. We reserve the right to change specifications without notice.

Flow controls

Valve locator

Functional symbol

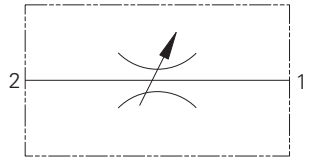

Model	Cavity	Flow rating	Typical pressure	Page
Manual rotary flow restrictor		L/min (USgpm)	bar (psi)	
MRV2-10	C-10-2	<56 (15)	210 (3000)	H-58
MRV2-16	C-16-2	<170.3 (45)	210 (3000)	H-60

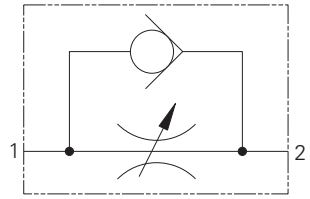

Model	Cavity	Flow rating	Typical pressure	Page
Needle valve		L/min (USgpm)	bar (psi)	
2CR80	A7447	<80 (20)	350 (5000)	H-62

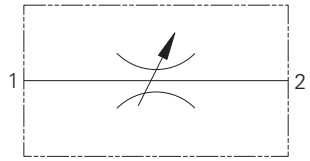

Model	Cavity	Flow rating	Typical pressure	Page
Needle valve		L/min (USgpm)	bar (psi)	
NV1-8	C-8-2	<45 (12)	280 (4000)	H-64
NV1-10	C-10-2	<45 (12)	210 (3000)	H-66
FCV7-10	C-10-2	<45 (12)	210 (3000)	H-72
FCV11-12	C-12-2(u)	<114 (30)	350 (5000)	H-74
FCV6-16	C-16-2	<208 (55)	210 (3000)	H-76

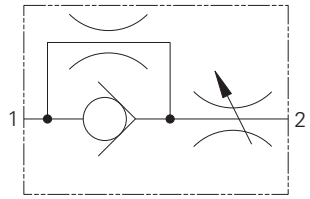

Model	Cavity	Flow rating	Typical pressure	Page
Needle valve		L/min (USgpm)	bar (psi)	
NV1-16	C-16-2	<151 (40)	210 (3000)	H-68
NV1-20	C-20-2	<265 (70)	210 (3000)	H-70

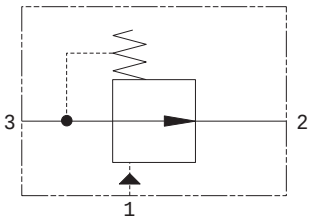

Model	Cavity	Flow rating	Typical pressure	Page
Pressure compensator, restrictive		L/min (USgpm)	bar (psi)	
PCS3-10	C-10-3	<38 (10)	210 (3000)	H-78
PCS13-10	C-10-3	<38 (10)	350 (5000)	H-80
PCS3-12	C-12-3	<58 (15)	240 (3500)	H-82
PCS13-12	C-12-3	<58 (15)	350 (5000)	H-84
PCS3-16	C-16-3	<114 (30)	210 (3000)	H-86
PCS13-16	C-16-3	<114 (30)	350 (5000)	H-88
PCS3-20	C-20-3	<189 (50)	210 (3000)	H-90

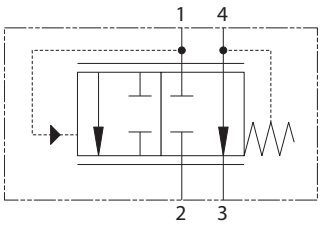

Model	Cavity	Flow rating	Typical pressure	Page
Pressure compensator bypass/priority		L/min (USgpm)	bar (psi)	
PCS4-10	C-10-4	<38 (10)	210 (3000)	H-92
PCS14-10	C-10-4	<38 (10)	350 (5000)	H-94
PCS4-12	C-12-4	<58 (15)	240 (3500)	H-96
PCS14-12	C-12-4	<58 (15)	350 (5000)	H-98
PCS4-16	C-16-4	<114 (30)	210 (3000)	H-100
PCS14-16	C-16-4	<114 (30)	350 (5000)	H-102
PCS4-20	C-20-4	<189 (50)	210 (3000)	H-104

Where measurements are critical request certified drawings. We reserve the right to change specifications without notice.

Functional symbol

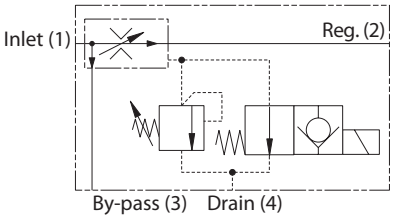

Model	Cavity	Flow rating	Typical pressure	Page
Flow regulator/diverter		L/min (USgpm)	bar (psi)	
2FPH55		<55 (14)	280 (4000)	H-106
2FPH95		<95 (25)	350 (5000)	H-106
2FPH195		<160 (42)	350 (5000)	H-106

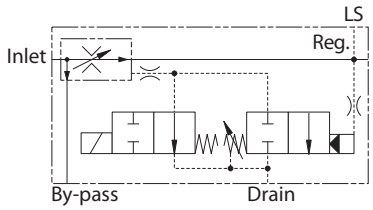

Model	Cavity	Flow rating	Typical pressure	Page
Flow regulator/diverter		L/min (USgpm)	bar (psi)	
2FPH250		<200 (52)	350 (5000)	H-106
2FPH350		<350 (92)	350 (5000)	H-106

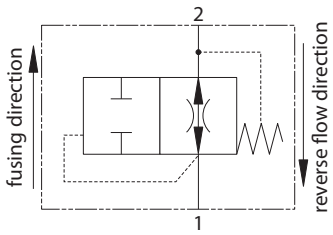

Model	Cavity	Flow rating	Typical pressure	Page
Flow fuse		L/min (USgpm)	bar (psi)	
VF1-10	C-10-2	23 (6)	210 (3000)	H-110
VF11-10	C-10-2	23 (6)	350 (5000)	H-110
VF1-16	C-16-2	114 (30)	210 (3000)	H-112

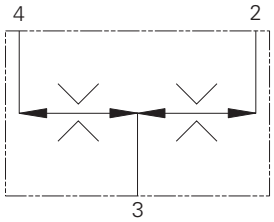

Model	Cavity	Flow rating	Typical pressure	Page
Flow divider/conbiner		L/min (USgpm)	bar (psi)	
FDC1-16	C-16-4	<178 (47)	210 (3000)	H-114
FDC11-16	C-16-4	<140 (37)	350 (5000)	H-116
2CFD50	A12744	<40 (10.5)	350 (5000)	H-118
2CFD200	CVB-42-04-0	<220 (58)	280 (4000)	H-120

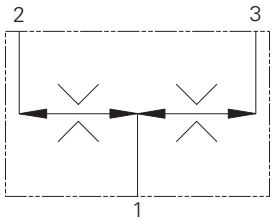

Model	Cavity	Flow rating	Typical pressure	Page
Flow divider/combiner		L/min (USgpm)	bar (psi)	
FDC1-20	Inline	<141 (37)	210 (3000)	H-122

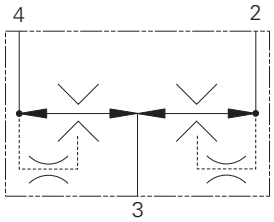

Model	Cavity	Flow rating	Typical pressure	Page
Flow divider/combiner, posi-traction		L/min (USgpm)	bar (psi)	
FDC3-16	C-16-4	<152 (40)	210 (3000)	H-124

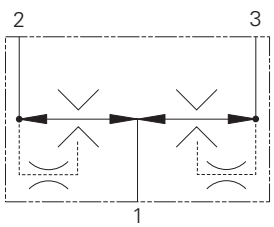

Model	Cavity	Flow rating	Typical pressure	Page
Flow divider/combiner, posi-traction		L/min (USgpm)	bar (psi)	
FDC3-20	Inline	<570 (150)	210 (3000)	H-126

Where measurements are critical request certified drawings. We reserve the right to change specifications without notice.

Logic elements

Valve locator

Functional symbol

Various

Model	Cavity	Flow rating	Typical pressure	Page
Logic element spool		**L/min (USgpm)**	**bar (psi)**	
DPS2-8	C-8-3S	30 (8)	350 (5000)	I-14
DPS2-10	C-10-3S	60 (15)	290 (4200)	I-16
DPS2-12	C-12-3S	114 (30)	350 (5000)	I-18
DPS2-16	C-16-3S	189 (50)	290 (4200)	I-20
DPS2-20	C-20-3S	303 (80)	290 (4200)	I-20

Model	Cavity	Rating	Pressure	Page
Logic element Poppet		**L/min (USgpm)**	**bar (psi)**	
DPS2-10	C-10-3S	60 (15)	350 (5000)	I-60
DPS2-12	C-12-3S	114 (30)	350 (5000)	I-18
DPS2-16	C-16-3S	189 (50)	350 (5000)	I-20
DPS2-20	C-20-3S	303 (80)	350 (5000)	I-22

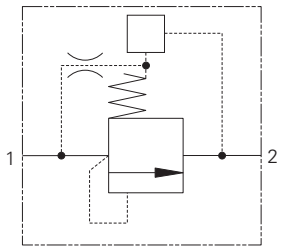

Model	Cavity	Flow rating	Typical pressure	Page
Logic element		**L/min (USgpm)**	**bar (psi)**	
LE402	C-20-2	350 (95)	350 (5000)	I-26

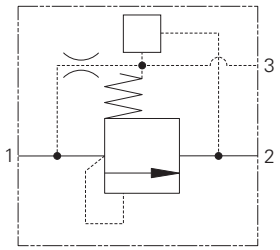

Model	Cavity	Flow rating	Typical pressure	Page
Logic element		**L/min (USgpm)**	**bar (psi)**	
LEV402	A21773	400 (100)	250 (3500)	I-28

Where measurements are critical request certified drawings. We reserve the right to change specifications without notice.

Functional symbol

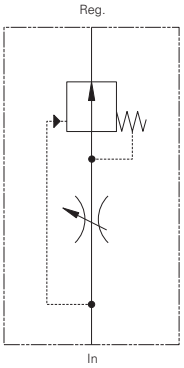

Model	Cavity	Flow rating	Typical pressure	Page
Flow control, full range adjustable		**L/min (USgpm)**	**bar (psi)**	
FC-1	Inline	36 (9)	210 (3000)	K-10
FC-2	Inline	57 (15)	210 (3000)	K-12
FC-3	Inline	114 (30)	210 (3000)	K-14
FC-4	Inline	190 (50)	210 (3000)	K-16

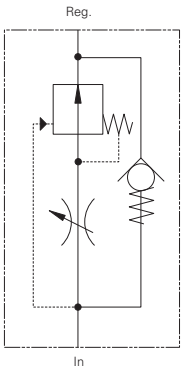

Model	Cavity	Flow rating	Typical pressure	Page
Flow control, full range adjustable		**L/min (USgpm)**	**bar (psi)**	
FRC-1	Inline	36 (9)	210 (3000)	K-18
FRC-2	Inline	57 (15)	210 (3000)	K-20
FRC-3	Inline	114 (30)	210 (3000)	K-22
FRC-4	Inline	190 (50)	210 (3000)	K-24

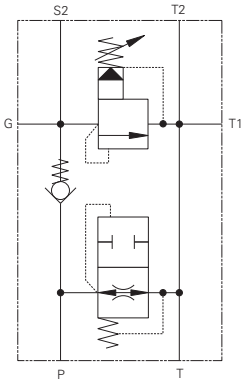

Model	Cavity	Flow rating	Typical pressure	Page
Pump control, single pump circulation		**L/min (USgpm)**	**bar (psi)**	
PCC1-12	Inline	114 (30)	210 (3000)	K-26
PCC1-16	Inline	228 (60)	210 (3000)	K-28

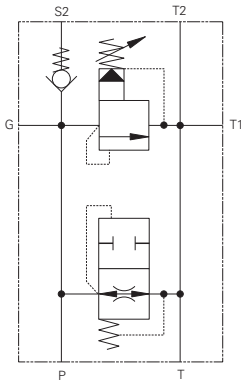

Model	Cavity	Flow rating	Typical pressure	Page
Pump control, single pump circulation		**L/min (USgpm)**	**bar (psi)**	
PCC2-12	Inline	114 (30)	5-210 (3000)	K-30
PCC2-16	Inline	228 (60)	10-210 (3000)	K-32

Where measurements are critical request certified drawings. We reserve the right to change specifications without notice.

Circuit maker solutions

Valve locator

Functional symbol

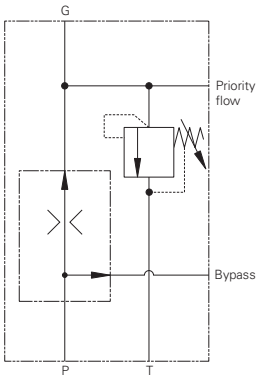

Model	Cavity	Flow rating	Typical pressure	Page
Flow control, relief on priority flow		**L/min (USgpm)**	**bar (psi)**	
PFRR-8	Inline	15 (4)	7-210 (3000)	K-34
PFRR-10	Inline	57 (15)	7-210 (3000)	K-36
PFRR-16	Inline	152 (40)	7-210 (3000)	K-38

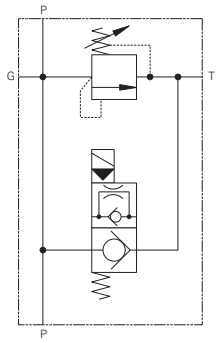

Model	Cavity	Flow rating	Typical pressure	Page
Relief valve, solenoid actuated		**L/min (USgpm)**	**bar (psi)**	
SRV-8	Inline	23 (6)	210 (3000)	K-40
SRV-10	Inline	57 (15)	210 (3000)	K-42
SRV-12	Inline	114 (30)	210 (3000)	K-44
SRV-16	Inline	225 (60)	210 (3000)	K-46
SRV-20	Inline	300 (80)	210 (3000)	K-48

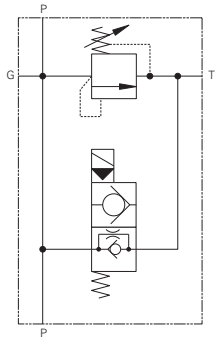

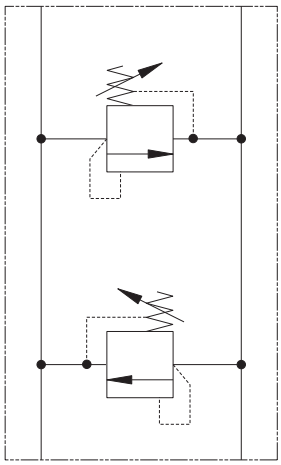

Model	Cavity	Flow rating	Typical pressure	Page
Cross port relief		**L/min (USgpm)**	**bar (psi)**	
CRV-10	Inline	26 (20)	210 (3000)	K-50
CRV-16	Inline	303 (80)	172 (2500)	K-52

Where measurements are critical request certified drawings. We reserve the right to change specifications without notice.

Functional symbol

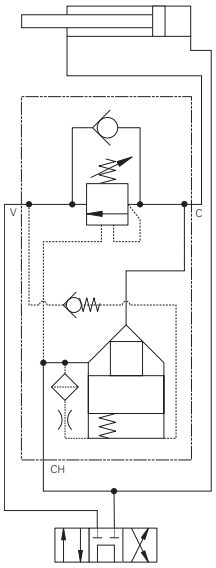

Model	Cavity	Flow rating	Typical pressure	Page
Regenerative valve, pressure		**L/min (USgpm)**	**bar (psi)**	
RGV-30	Inline	57 (15)	210 (3000)	K-54
RGV-90	Inline	114 (30)	210 (3000)	K-56

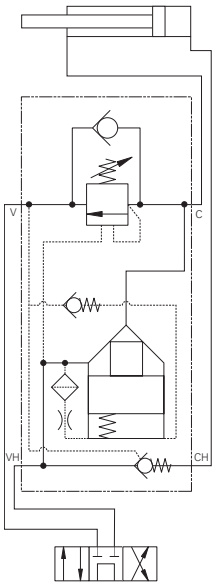

Model	Cavity	Flow rating	Typical pressure	Page
Regenerative valve, pressure		**L/min (USgpm)**	**bar (psi)**	
RLV-30	Inline	57 (15)	210 (3000)	K-58
RLV-90	Inline	114 (30)	210 (3000)	K-60

Where measurements are critical request certified drawings. We reserve the right to change specifications without notice.

Circuit maker solutions

Valve locator

Functional symbol

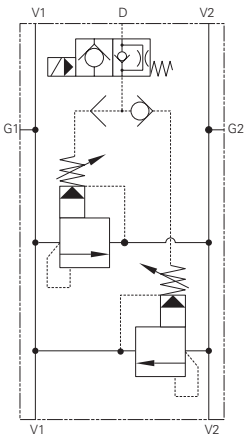

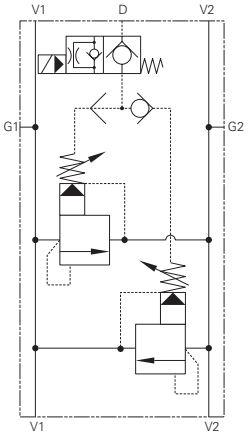

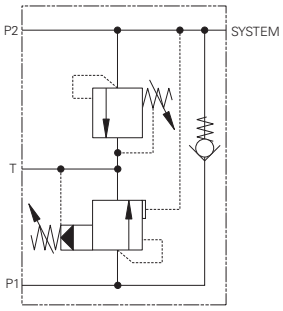

Model	Cavity	Flow rating	Typical pressure	Page
Relief valve, cross port solenoid		**L/min (USgpm)**	**bar (psi)**	
SCR-1		114 (30)	210 (3000)	K-62

Model	Cavity	Flow rating	Typical pressure	Page
Unloading valve		**L/min (USgpm)**	**bar (psi)**	
1UL255		200 (52)	350 (5000)	K-64

Where measurements are critical request certified drawings. We reserve the right to change specifications without notice.

Functional symbol

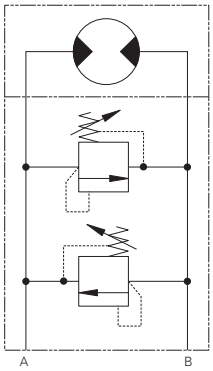

Model	Cavity	Flow rating	Typical pressure	Page
Motor mounted relief		**L/min (USgpm)**	**bar (psi)**	
H & T Motors		76 (20)	210 (3000)	K-68
2000 Motors		76 (20)	210 (3000)	K-69
OMP		150 (40)	350 (5000)	K-74
OMS		150 (40)	350 (5000)	K--

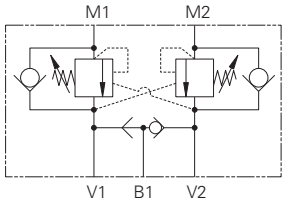

Model	Cavity	Flow rating	Typical pressure	Page
Motor mounted OCV with brake shuttle		**L/min (USgpm)**	**bar (psi)**	
H & T Motors		60 (15)	210 (3000)	K-70
2000 Motors		60 (15)	210 (3000)	K-72
OMP		30 (8)	270 (4000)	K-74
OMS		90 (23)	270 (4000)	K-76

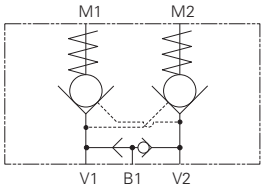

Model	Cavity	Flow rating	Typical pressure	Page
Motor mounted P.O. check with brake shuttle		**L/min (USgpm)**	**bar (psi)**	
H & T Motors		60 (15)	210 (3000)	K-78
2000 Motors		60 (15)	210 (3000)	K-80

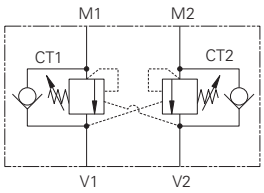

Model	Cavity	Flow rating	Typical pressure	Page
Motor mounted OCV		**L/min (USgpm)**	**bar (psi)**	
OMP		30 (8)	270 (4000)	K-83
OMS		90 (23)	270 (4000)	K-85

Where measurements are critical request certified drawings. We reserve the right to change specifications without notice.

Pressure control functions

Sandwich valves locator

ISO 4401-03/CETOP 03 series

⚠ Caution

Sandwich valve flow ratings are limited by the ratings of individual cartridges Consult cartridge valve literature.

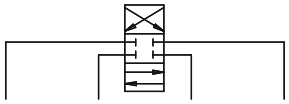

Function	Functional symbol	Model code	Housing kit	
Relief valve P-T	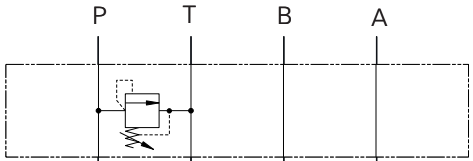	RV1 10 * * A321P **/**** 00	Model Part No. Cartridge Cartridge Data Sheet Cavity	A321P 02 185342 RV1-10 Section E C-10-2
Relief valve A-T	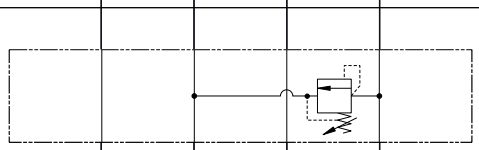	RV1 10* * A321A **/**** 00	Model Part No. Cartridge Cartridge Data Sheet Cavity	A321A 02-185340 RV1-10 Section E C-10-2
Relief valve B-T	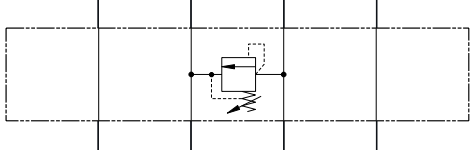	RV1 10* * A321B **/**** 00	Model Part No. Cartridge Cartridge Data Sheet Cavity	A321B 02-185341 RV1-10 Section E C-10-2
Proportional Relief valve P-T	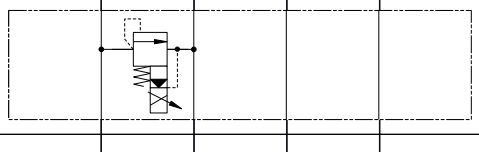	ERV1 10* *** A321P *** * 00	Model Part No. Cartridge Cartridge Data Sheet Cavity	A321P 02-185342 ERV1-10 Section B C-10-2
Proportional Relief valve A-T	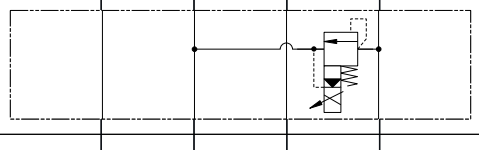	ERV1 10* *** A321A *** * 00	Model Part No. Cartridge Cartridge Data Sheet Cavity	A321A 02-185340 ERV1-10 Section B C-10-2
Proportional Relief valve B-T	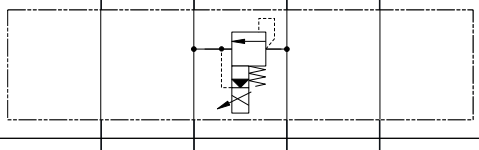	ERV1 10* *** A321B *** * 00	Model Part No. Cartridge Cartridge Data Sheet Cavity	A321B 02-185341 ERV1-10 Section B C-10-2
Relief valve P-T	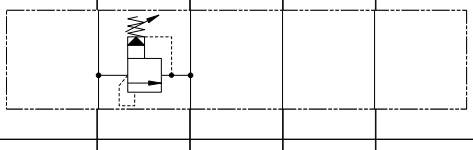	RV5 10* * A321P **/**** 00	Model Part No. Cartridge Cartridge Data Sheet Cavity	A321P 02-185342 RV5-10 Section B C-10-2
Relief valve A-T	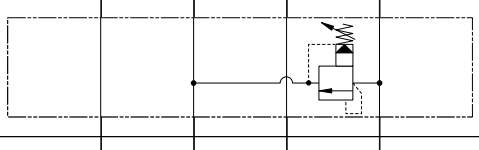	RV5 10* * A321A **/**** 00	Model Part No. Cartridge Cartridge Data Sheet Cavity	A321A 02-185340 RV5-10 Section E C-10-2
Relief valve B-T	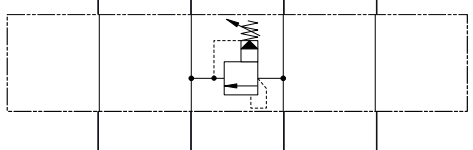	RV5 10* * A321B **/**** 00	Model Part No. Cartridge Cartridge Data Sheet Cavity	A321B 02-185341 RV5-10 Section E C-10-2

Where measurements are critical request certified drawings. We reserve the right to change specifications without notice.

⚠ Caution
Sandwich valve flow ratings are limited by the ratings of individual cartridges. Consult cartridge valve literature.

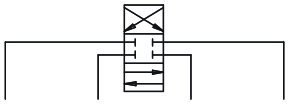

Function	Functional symbol	Model code	Housing kit	
Solenoid Controlled Relief Valve P-T Normally Opened	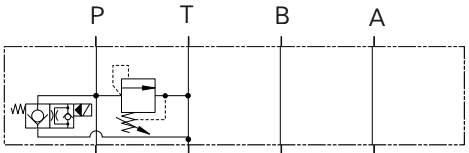	SRV 10 * 0 S A322P 35/ ** ** Refer to page L-20 for model code breakdown	Model Part No. Cartridge Cartridge Data Sheet Cavity	A322P 02 185344 SV5-8/RV-1-10 Section A/E C-8-2/C-10-2
Solenoid Controlled Relief Valve P-T Normally Closed	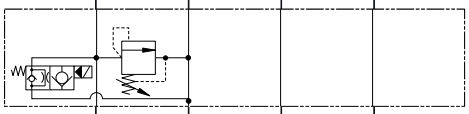	SRV 10 * C S A322P 35/*** ** Refer to page L-20 for model code breakdown	Model Part No. Cartridge Cartridge Data Sheet Cavity	A322P 02-185344 SV5-8-C/ RV1-10 Section A/E C-8-2/C-10-2
Dual Relief Valve A-T, B-T	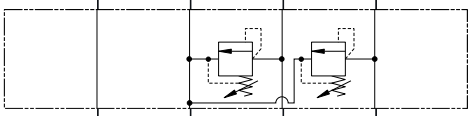	1DR30 * A311W A** *B** * Refer to page L-21 for model code breakdown	Model Part No. Cartridge Cartridge Data Sheet Cavity	A311W 02-185364 1DR30 qty 2 Section E C-8-2 qty. 2
Dual Relief valve A-T, B-T	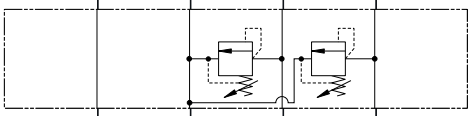	RVS 10 * * A312W A**/****B**/**** 00 Refer to page L-20 for model code breakdown	Model Part No. Cartridge Cartridge Data Sheet Cavity	A312W 02-185365 RV1-10 qty 2 Section E C-10-2 qty 2
Dual Relief valve A-T, B-T	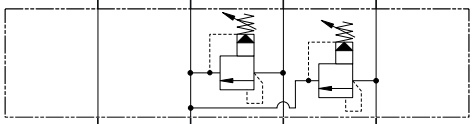	RV5 10 * * A312W A**/****B**/**** 00 Refer to page L-20 for model code breakdown	Model Part No. Cartridge Cartridge Data Sheet Cavity	A312W 02-185365 RV5-10 qty 2 Section E C-10-2 qty 2
Cross Port Relief Valve A-B	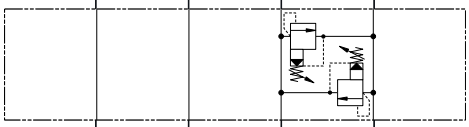	RV5A 10 ** A321W A**/****B**/****00 Refer to page L-20 for model code breakdown	Hsg kit: model Part No. Cartridge Cartridge Data Sheet Cavity	A321W 02-185343 RV3A-10 qty 2 Section E C-10-2 qty 2
Cross Port Relief Valve A-B	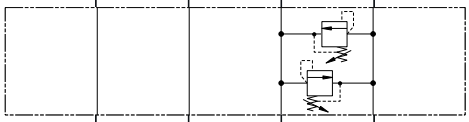	RV3A 10 * * A321W A**/****B**/**** 00 Refer to page L-20 for model code breakdown	Model Part No. Cartridge Cartridge Data Sheet Cavity	A321W 02-185343 RV5-10 qty 2 Section E C-10-2 qty 2
Sequence Valve In to P		PSV7 10 * * A316P **/**** 00 Refer to page L-21 for model code breakdown	Model Part No. Cartridge Cartridge Data Sheet Cavity	A316P 02-185374 PSV7-10 Section E C-10-3
Sequence Valve In to A Reverse FF Check		PSV7 10 * * A316A **/**** 00 Refer to page L-21 for model code breakdown	Model Part No. Cartridge Cartridge Data Sheet Cavity	A316A 02-185372 PSV7-10/ CV3-10 Section E/G C-10-3/C-10-2

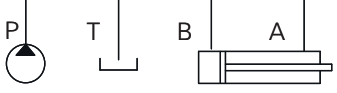

Where measurements are critical request certified drawings. We reserve the right to change specifications without notice.

Pressure control functions

⚠ Caution
Sandwich valve flow ratings are limited by the ratings of individual cartridges. Consult cartridge valve literature.

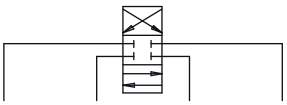

Function	Functional symbol	Model code	Housing kit
Sequence Valve Out of A Reverse FF Check	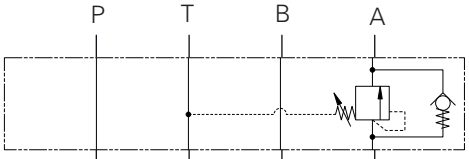	PSV7 10 * * A319A **/**** 00 Refer to page L-21 for model code breakdown	Model Part No. A319A 02-185377 Cartridge PSV7-10/CV3-10 Cartridge Data Sheet Section E/G Cavity C-10-3/C-10-2
Sequence Valve In to B Reverse FF Check	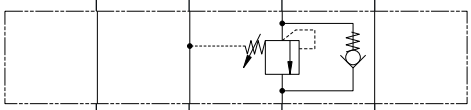	PSV7 10 * * A316B **/**** 00 Refer to page L-21 for model code breakdown	Model Part No. A316B 02-185373 Cartridge PSV7-10/CV3-10 Cartridge Data Sheet Section E/G Cavity C-10-3/C-10-2
Sequence Valve Out of B Reverse FF Check	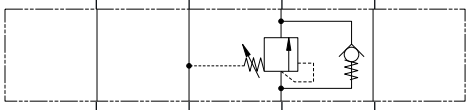	PSV7 10 * * A319B **/**** 00 Refer to page L-21 for model code breakdown	Model Part No. A319B 02-185378 Cartridge PSV7-10/CV3-10 Cartridge Data Sheet Section E /G Cavity C-10-3/C-10-2
Reducing Valve on (P) Drained to T	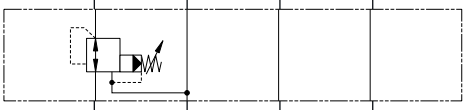	PRV2 10 * * A326P **/**** 00 Refer to page L-21 for model code breakdown	Model Part No. A326P 02-185353 Cartridge PRV2-10 Cartridge Data Sheet Section E Cavity C-10-3
Reducing on A Drained to T Reverse FF Check	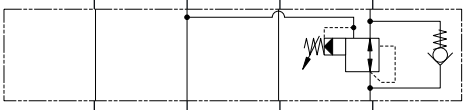	PRV2 10 * * A310A **/**** 00 Refer to page L-21 for model code breakdown	Model Part No. A310A 02-185362 Cartridge PRV2-10/CV3-10 Cartridge Data Sheet Section E/G Cavity C-10-3/C-10-2
Reducing on B Drained to T Reverse FF Check	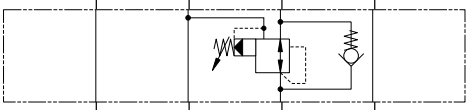	PRV2 10 * * A310B **/**** 00 Refer to page L-21 for model code breakdown	Hsg kit: model Part No. A310B 02-185363 Cartridge PRV2-10/CV3-10 Cartridge Data Sheet Section E/G Cavity C-10-3/C-10-2
Pressure Compensator Restrictive on P w/Shuttle Sense from A & B	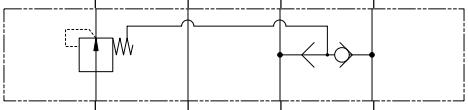	PCR 10 * A309P *** 00 Refer to page L-22 for model code breakdown	Model Part No. A309P 02-185381 Cartridge DPS2-10-F-F-0/DSV2-8 Cartridge Data Sheet Section L/G Cavity C-10-3S/C-8-3
Pressure Compensator Bypass to T w/Shuttle Sense from A & B	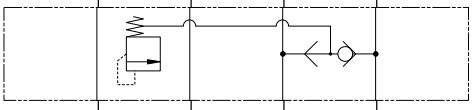	PCB 10 * * A319P *** 00 Refer to page L-22 for model code breakdown	Model Part No. A319P 02-185382 Cartridge DPS2-10-P-F-O/DSV2-8 Cartridge Data Sheet Section L/G Cavity C-8-3/C-10-3S

Where measurements are critical request certified drawings. We reserve the right to change specifications without notice.

⚠ Caution
Sandwich valve flow ratings are limited by the ratings of individual cartridges. Consult cartridge valve literature.

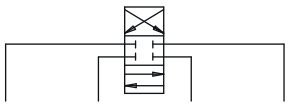

Function	Functional symbol	Model code	Housing kit
Pilot Operated Check Valve On A Pilot from B	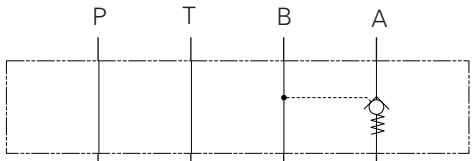	4CK30 * A323A *** 00	Model A323A Cartridge 4CK30 Cartridge Data Sheet Section G Cavity A6610
Pilot Operated Check Valve On B Pilot from A	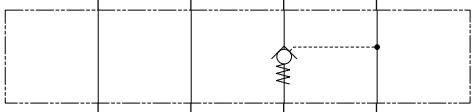	4CK30 * A323B *** 00	Model A323B Cartridge 4CK30 Cartridge Data Sheet Section G Cavity A6610
Pilot Operated Check Valve On A & B Cross Piloted	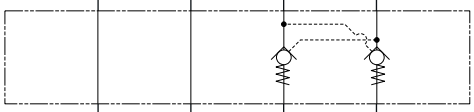	4CK30 * A323W *** 00	Model A323W Cartridge 4CK30 Cartridge Data Sheet Section G Cavity A6610
Check Valve On P		CV3 8 * P A307P *** 00	Model A307P Part No. 02-185356 Cartridge CV3-8 Cartridge Data Sheet Section G Cavity C-8-2
Check Valve On P		CV3 10 * P A324P *** 00	Model A324P Part No. 02-185350 Cartridge CV3-10 Cartridge Data Sheet Section G Cavity C-10-2
Check Valve on T	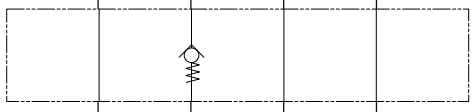	CV3 8 * P A307T *** 00	Hsg kit: model A307T Part No. 02-185357 Cartridge CV3-8 Cartridge Data Sheet Section G Cavity C-8-2
Check Valve On T	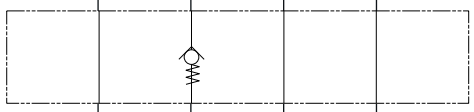	CV3 10 * P A308T *** 00	Model A308T Part No. 02-185360 Cartridge CV3-10 Cartridge Data Sheet Section G Cavity C-10-2
Check Valve On A Free Flow Out		CV3 8 * P A307A *** 00	Model A307A Part No. 02-185354 Cartridge CV3-8 Cartridge Data Sheet Section G Cavity C-8-2
Check Valve On A Free Flow Out	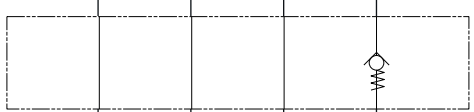	CV3 10 * P A314A *** 00	Model A314A Part No. 02-185367 Cartridge CV3-10 Cartridge Data Sheet Section G Cavity C-10-2

Where measurements are critical request certified drawings. We reserve the right to change specifications without notice.

Check and flow control functions

⚠ Caution
Sandwich valve flow ratings are limited by the ratings of individual cartridges. Consult cartridge valve literature.

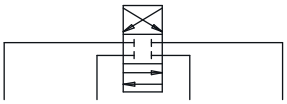

Function	Functional symbol	Model code	Housing kit
Check Valve On B Free Flow Out	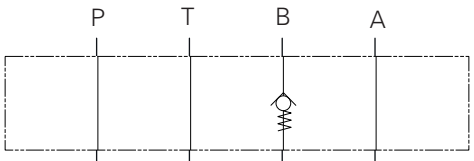	CV3 8 * P A307B *** 00	Model Part No. Cartridge Cartridge Data Sheet Cavity	A307B 02-185355 CV3-8 Section G C-8-2
Check Valve On B Free Flow Out	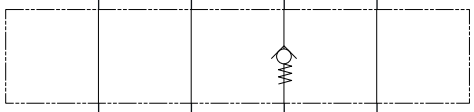	CV3 10 * P A314B *** 00	Model Part No. Cartridge Cartridge Data Sheet Cavity	A314B 02-185368 CV3-10 Section G C-10-2
Check Valve On T On A & B	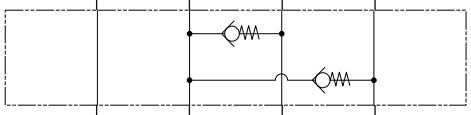	CV3 8 * P A320T *** 00	Model Part No. Cartridge Cartridge Data Sheet Cavity	A320T 02-185379 CV3-8 qty 2 Section G C-8-2 qty 2
Check Valve on T to A & B	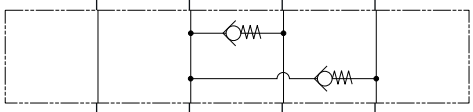	CV10 10 * P A317P *** 00	Model Part No. Cartridge Cartridge Data Sheet Cavity	A317T 02-185375 CV3-10 qty 2 Section G C-10-2 qty 2
Anti-Caviation Check P-T	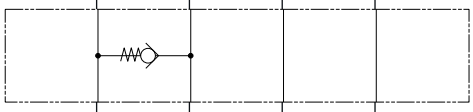	CV16 10 * P A321P *** 00	Model Part No. Cartridge Cartridge Data Sheet Cavity	A321P 02-185342 CV16-10-P-O-5 Section G C-10-2
Shuttle Valve A & B Output External	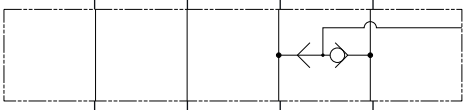	DSV2 8 * B A309W 00	Model Part No. Cartridge Cartridge Data Sheet Cavity	A309W 02-185361 DSV2-8-B-O Section G C-8-3
Flow Control Meter in P		NV1 10 * * A324P 00	Model Part No. Cartridge Cartridge Data Sheet Cavity	A324P 02-185350 NV1-10 Section H C-10-2
Flow Control & Check Meter in A		FCV7 10 * * A324A FF 00	Model Part No. Cartridge Cartridge Data Sheet Cavity	A324A 02-185348 FCV7-10 Section H C-10-2
Flow Control & Check Meter Out A		FCV7 10 * * A314A FF 00	Model Part No. Cartridge Cartridge Data Sheet Cavity	A314A 02-185367 FCV7-10 Section H C-10-2
Flow Control & Check Meter in B	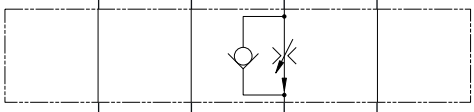	FCV7 10 * * A324B FF 00	Model Part No. Cartridge Cartridge Data Sheet Cavity	A324B 02-185349 FCV7-10 Section H C-10-2

Where measurements are critical request certified drawings. We reserve the right to change specifications without notice.

⚠ Caution
Sandwich valve flow ratings are limited by the ratings of individual cartridges. Consult cartridge valve literature.

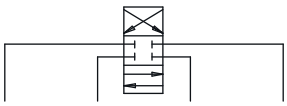

Function	Functional Symbol	Model Code	Housing Kit	
Flow Control & Check Meter Out B	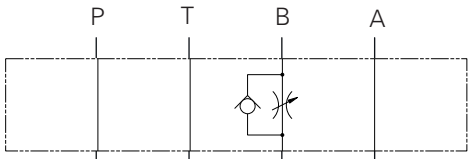	FCV7 10 * * A314B FF 00	Model Part No. Cartridge Cartridge Data Sheet Cavity	A314B 02-185368 FCV7-10 Section H C-10-2
Flow Control & Check Meter In A & B	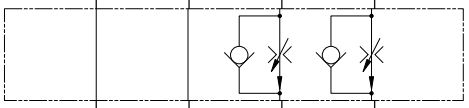	FCV7 10 * * A324W FF 00 Refer to page L-22 for model code breakdown	Model Part No. Cartridge Cartridge Data Sheet Cavity	A324W 02-185351 FCV7-10 qty 2 Section H C-10-2 qty 2
Flow Control & Check Meter Out A & B	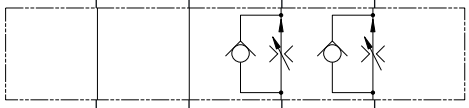	FCV7 10 * * A314W FF 00 Refer to page L-22 for model code breakdown	Model Part No. Cartridge Cartridge Data Sheet Cavity	A314W 02-185369 FCV7-10 qty 2 Section H C-8-2 qty 2
Flow Regulator Pressure Compensated and Check Meter in P		FAR1 10 * * A324P *** 00	Model Part No. Cartridge Cartridge Data Sheet Cavity	A324P 02-185350 FAR1-10 Section H C-10-2
Flow Regulator Pressure Compensated and Check Meter in A		FAR1 10 * * A314A *** 00	Model Part No. Cartridge Cartridge Data Sheet Cavity	A314A 02-185367 FAR1-10 Section H C-10-2
Flow Regulator Pressure Compensated and Check Meter Out A		FAR1 10 * * A324A *** 00	Hsg kit: model Part No. Cartridge Cartridge Data Sheet Cavity	A324A 02-185348 FAR1-10 Section H C-10-2
Flow Regulator Pressure Compensated and Check Meter in B	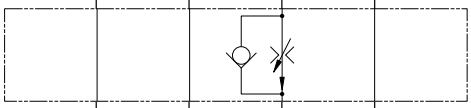	FAR1 10 * * A314B *** 00	Model Part No. Cartridge Cartridge Data Sheet Cavity	A314B 02-185368 FAR1-10 Section H C-10-2
Flow Regulator Pressure Compensated and Check Meter Out B	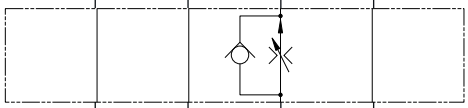	FAR1 10 * * A324B *** 00	Model Part No. Cartridge Cartridge Data Sheet Cavity	A324B 02-185349 FAR1-10 Section H C-10-2
Flow Regulator Pressure Compensated and Check Meter In A & B	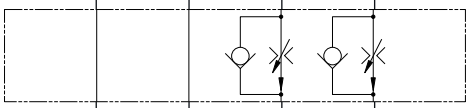	FAR1 10 * * A314W A***B*** 00	Model Part No. Cartridge Cartridge Data Sheet Cavity	A314W 02-185369 FAR1-10 qty 2 Section H C-10-2 qty 2

Where measurements are critical request certified drawings. We reserve the right to change specifications without notice.

Flow control & solenoid control functions

⚠ Caution
Sandwich valve flow ratings are limited by the ratings of individual cartridges. Consult cartridge valve literature.

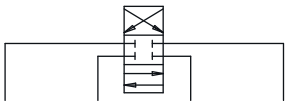

Function	Functional symbol	Model code	Housing kit
Flow Regulator Pressure Compensated and Check Meter Out A & B	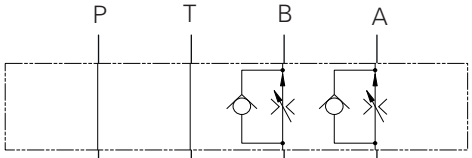	FAR1 10 * * A324W A***B*** 00	Model Part No. A324W 02-185351 Cartridge FAR1-10 qty 2 Cartridge Data Sheet Section H Cavity C-10-2 qty 2
Proportional Flow Control Pressure Compensation on P		EPV 10 * * A313P *** * * 00 Refer to page L-23 for model code breakdown	Model Part No. A313P 02-185366 Cartridge EPV-10, DPS2-10 Cartridge Data Sheet Section I & B Cavity C-10-2/C-10-3S
Solenoid 2 Way Poppet Type (P-T), N/C	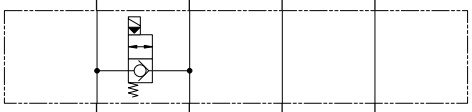	SV3 10 * C A325P *** * 00	Model Part No. A325P 02-185352 Cartridge SV3-10-C Cartridge Data Sheet Section A Cavity C-10-2
Solenoid 2 Way Poppet Type (P-T), N/O		SV3 10 * O A325P *** * 00	Model Part No. A325P 02-185352 Cartridge SV3-10-0 Cartridge Data Sheet Section A Cavity C-10-2
Solenoid 2 Way Spool type (P-T), N/C	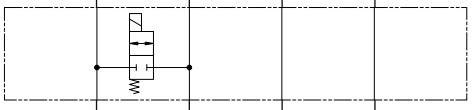	SV4 10 * C A325P *** * 00	Model Part No. A325P 02-185352 Cartridge SV4-10-C Cartridge Data Sheet Section A Cavity C-10-2
Solenoid 2 Way Spool Type (P-T), N/O	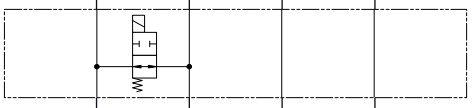	SV4 10 * O A325P *** * 00	Model Part No. A325P 02-185352 Cartridge SV4-10-0 Cartridge Data Sheet Section A Cavity C-10-2
Solenoid 2 Way Poppet Type Blocked on A Normally Closed		SV3 10 * C A324A *** * 00	Model Part No. A324A 02-185348 Cartridge SV3-10-C Cartridge Data Sheet Section A Cavity C-10-2

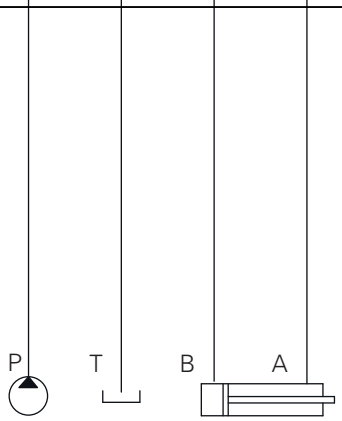

Where measurements are critical request certified drawings. We reserve the right to change specifications without notice.

Solenoid control functions

⚠ Caution
Sandwich valve flow ratings are limited by the ratings of individual cartridges. Consult cartridge valve literature.

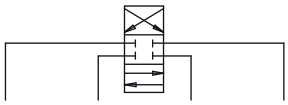

Function	Functional symbol	Model code	Housing kit
Poppet Type Blocked on A Normally Open	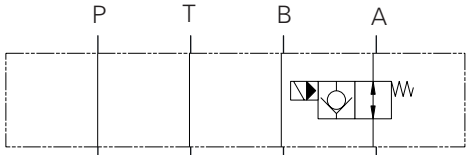	SV3 10 * O A324A *** * 00	Model Part No. Cartridge Cartridge Data Sheet Cavity A324A 02-185348 SV3-10-O Section A C-10-2
Spool Type Blocked on A Normally Closed		SV4 10 * C A324A *** * 00	Model Part No. Cartridge Cartridge Data Sheet Cavity A324A 02-185348 SV4-10-C Section A C-10-2
Spool Type Blocked on A Normally Open		SV4 10 * O A324A *** * 00	Model Part No. Cartridge Cartridge Data Sheet Cavity A324A 02-185348 SV4-10-O Section A C-10-2
Poppet Type Blocked on B Normally Closed	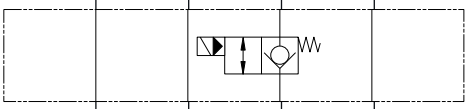	SV3 10 * C A324B *** * 00	Model Part No. Cartridge Cartridge Data Sheet Cavity A324B 02-185349 SVC3-10-C Section A C-10-2
Poppet Type Blocked on B Normally Open	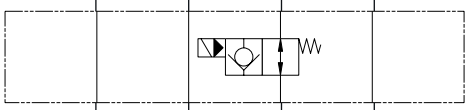	SV3 10 * O A324B *** * 00	Model Part No. Cartridge Cartridge Data Sheet Cavity A324B 02-185349 SV3-10-C Section A C-10-2
Spool Type Blocked on B Normally Closed	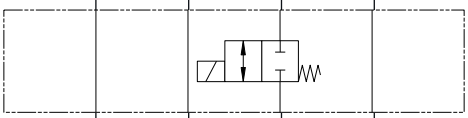	SV4 10 * C A324B *** * 00	Model Part No. Cartridge Cartridge Data Sheet Cavity A324B 02-185349 SV4-10-C Section A C-10-2
Spool Type Blocked on B Normally Open	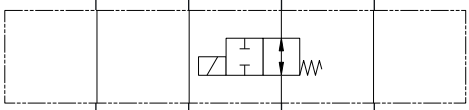	SV4 10 * O A324B *** * 00	Model Part No. Cartridge Cartridge Data Sheet Cavity A324B 02-185349 SV4-10-O Section A C-10-2
Poppet Type Blocked on A & B Normally Closed	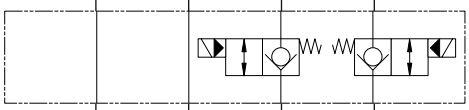	SV3 10 * C A324W *** * 00	Model Part No. Cartridge Cartridge Data Sheet Cavity A324W 02-185351 SV3-10-C qty 2 Section A C-10-2 qty 2
Poppet Type Blocked on A & B Normally Open	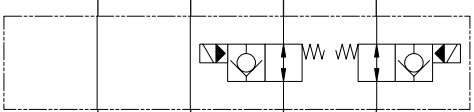	SV3 10 * O A324W *** * 00	Model Part No. Cartridge Cartridge Data Sheet Cavity A324W 02-185351 SV3-10-O qty 2 Section A C-10-2 qty 2

Where measurements are critical request certified drawings. We reserve the right to change specifications without notice.

Solenoid control functions

⚠ Caution
Sandwich valve flow ratings are limited by the ratings of individual cartridges. Consult cartridge valve literature.

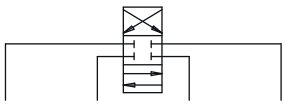

Function	Functional symbol	Model code	Housing kit
Spool Type Blocked On A & B Normally Closed	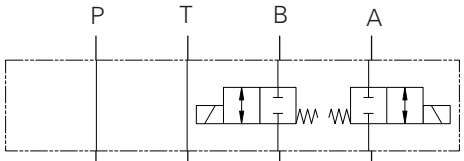	SV4 10 * C A324W *** * 00	Model A324W Part No. 02-185351 Cartridge SV4-10-C qty 2 Cartridge Data Sheet Section A Cavity C-10-2 qty 2
Spool Type Blocked on A & B Normally Open	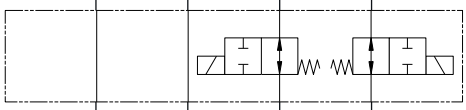	SV4 10 * O A324W *** * 00	Model A324W Part No. 02-185351 Cartridge SV4-10-O qty 2 Cartridge Data Sheet Section A Cavity C-10-2 qty 2
Poppet Type Load Holding On A Normally Closed		SV3 10 * C A314A *** * 00	Model A314A Part No. 02-185367 Cartridge SV3-10-C Cartridge Data Sheet Section A Cavity C-10-2
Poppet Type Load Holding on A Normally Open		SV3 10 * O A314A *** * 00	Model A314A Part No. 02-185367 Cartridge SV3-10-O Cartridge Data Sheet Section A Cavity C-10-2
Poppet Type Load Holding on B Normally Closed	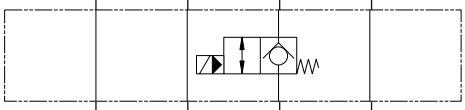	SV3 10 * C A314B *** * 00	Model A314B Part No. 02-185368 Cartridge SV3-10-C Cartridge Data Sheet Section A Cavity C-10-2
Poppet Type Load Holding on B Normally Open	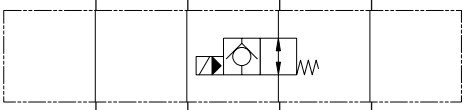	SV3 10 * O A314B *** * 00	Model A314B Part No. 02-185368 Cartridge SV3-10-O Cartridge Data Sheet Section A Cavity C-10-2
Poppet Type Load Holding on A & B Normally Closed	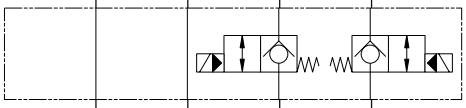	SV3 10 * C A314W *** * 00	Model A314W Part No. 02-185369 Cartridge SV3-10-C qty 2 Cartridge Data Sheet Section A Cavity C-10-2 qty 2
Poppet Type Load Holding on A & B Normally Open	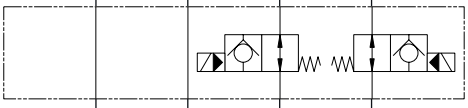	SV3 10 * O A314W *** * 00	Model A314W Part No. 02-185369 Cartridge SV3-10-O qty 2 Cartridge Data Sheet Section A Cavity C-10-2 qty 2

Where measurements are critical request certified drawings. We reserve the right to change specifications without notice.

⚠ Caution
Sandwich valve flow ratings are limited by the ratings of individual cartridges. Consult cartridge valve literature.

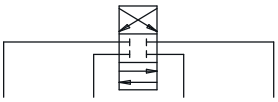

Function	Functional symbol	Model code	Housing kit
Poppet Type Bi-Directional Load Holding on A Normally Closed		SBV11 10 * C A314A *** * 00	Model A314A Part No. 02-185367 Cartridge SBV11-10-C Cartridge Data Sheet Section A Cavity C-10-2
Poppet Type Bi-Directional Load Holding on A Normally Open		SBV11 10 * O A314A *** * 00	Model A314A Part No. 02-185367 Cartridge SBV11-10-O Cartridge Data Sheet Section A Cavity C-10-2
Poppet Type Bi-Directional Load Holding on B Normally Closed		SBV11 10 * C A314B *** * 00	Model A314B Part No. 02-185368 Cartridge SBV11-10-C Cartridge Data Sheet Section A Cavity C-10-2
Poppet Type Bi-Directional Load Holding on B Normally Open		SBV11 10 * O A314B *** * 00	Model A314B Part No. 02-185368 Cartridge SBV11-10-O Cartridge Data Sheet Section A Cavity C-10-2
Poppet Type Bi-Directional Load Holding on A & B Normally Closed		SBV11 10 * C A314W *** * 00	Model A314W Part No. 02-185369 Cartridge SBV11-10-C qty 2 Cartridge Data Sheet Section A Cavity C-10-2 qty 2
Poppet Type Bi-Directional Load Holding on A & B Normally Open		SBV11 10 * O A314W *** * 00	Model A314W Part No. 02-185369 Cartridge SBV11-10-O qty 2 Cartridge Data Sheet Section A Cavity C-10-2 qty 2

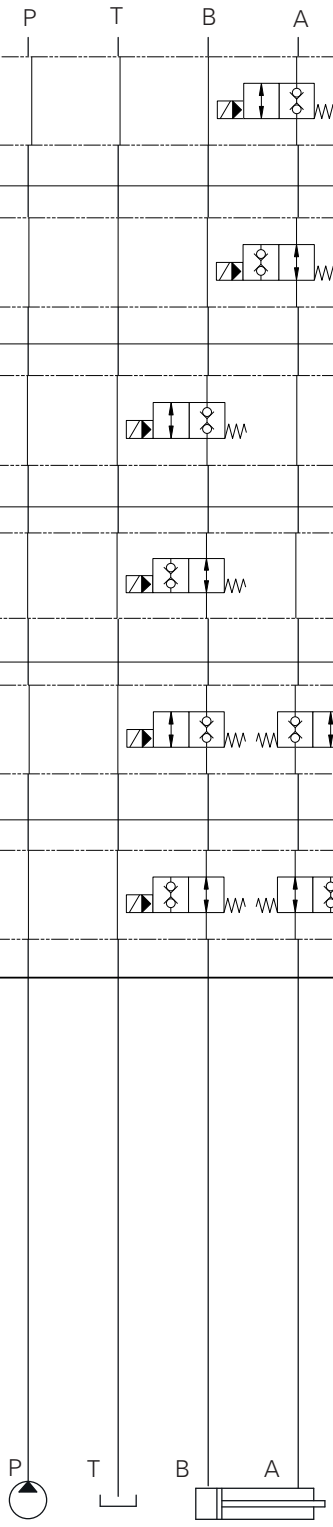

Where measurements are critical request certified drawings. We reserve the right to change specifications without notice.

Solenoid control functions

⚠ Caution
Sandwich valve flow ratings are limited by the ratings of individual cartridges. Consult cartridge valve literature.

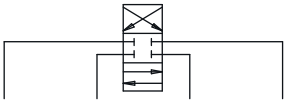

Function	Functional symbol	Model code	Housing kit
Poppet Type Unload A - T Normally Closed		SV3 10 * C A315A *** * 00	Model A315A Part No. 02-185370 Cartridge SV3-10-C Cartridge Data Sheet Section A Cavity C-10-2
Poppet Type Unload A - T Normally Open		SV3 10 * O A315A *** * 00	Model A315A Part No. 02-185370 Cartridge SV3-10-O Cartridge Data Sheet Section A Cavity C-10-2
Spool Type Unload A - T Normally Closed		SV4 10 * C A315A *** * 00	Model A315A Part No. 02-185370 Cartridge SV4-10-C Cartridge Data Sheet Section A Cavity C-10-2
Spool Type Unload A - T Normally Open		SV4 10 * O A315A *** * 00	Model A315A Part No. 02-185370 Cartridge SV4-10-O Cartridge Data Sheet Section A Cavity C-10-2
Poppet Type Unload B - T Normally Closed		SV3 10 * C A315B *** * 00	Model A315B Part No. 02-185371 Cartridge SV3-10-C Cartridge Data Sheet Section A Cavity C-10-2
Poppet Type Unload B - T Normally Open		SV3 10 * O A315B *** * 00	Model A315B Part No. 02-185371 Cartridge SV3-10-O Cartridge Data Sheet Section A Cavity C-10-2
Poppet Type Unload B - T Normally Closed		SV4 10 * C A315B *** * 00	Model A315B Part No. 02-185371 Cartridge SV4-10-C Cartridge Data Sheet Section A Cavity C-10-2

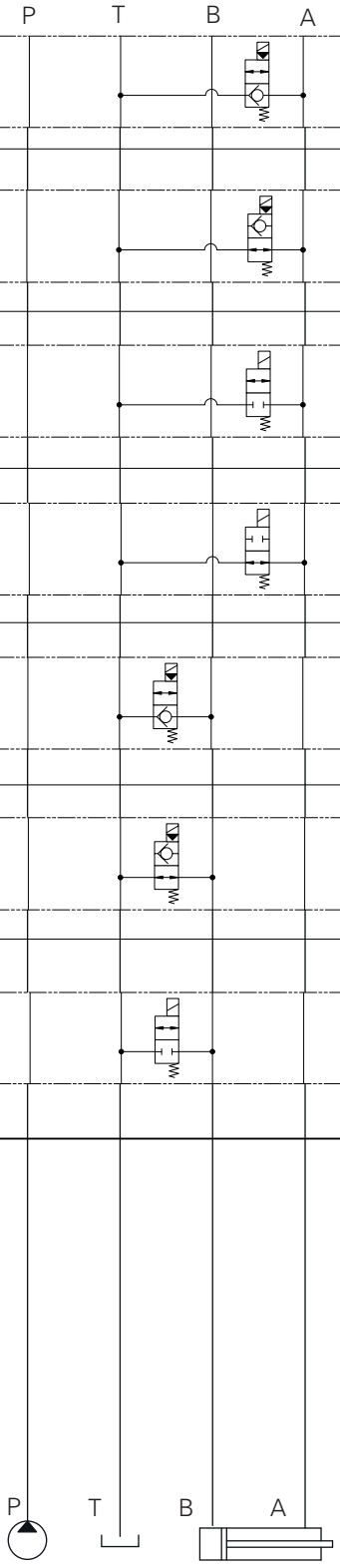

Where measurements are critical request certified drawings. We reserve the right to change specifications without notice.

⚠ Caution
Sandwich valve flow ratings are limited by the ratings of individual cartridges. Consult cartridge valve literature.

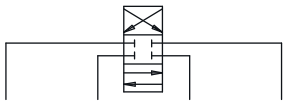

Function	Functional symbol	Model code	Housing kit
2 Way Spool Type Unload B - T Normally Open		SV4 10 * 0 A315B *** * 00	Model A315B Part No. 02-185371 Cartridge SV4-10-O Cartridge Data Sheet Section A Cavity C-10-2
2 Way Poppet Type Unload A & B - T Normally Closed		SV3 10 * C A317T *** * 00	Model A317T Part No. 02-185375 Cartridge SV3-10-C qty 2 Cartridge Data Sheet Section A Cavity C-10-2 qty 2
2 Way Poppet Type Unload A & B - T Normally Open		SV3 10 * O A317T *** * 00	Model A317T Part No. 02-185375 Cartridge SV3-10-O qty 2 Cartridge Data Sheet Section A Cavity C-10-2 qty 2
2 Way Spool Type Unload A & B - T Normally Closed		SV4 10 * C A317T *** * 00	Model A317T Part No. 02-185375 Cartridge SV4-10-C qty 2 Cartridge Data Sheet Section A Cavity C-10-2 qty 2
2 Way Spool Type Unload A & B - T Normally Open		SV4 10 * O A317T *** * 00	Model A317T Part No. 02-185375 Cartridge SV4-10-O qty 2 Cartridge Data Sheet Section A Cavity C-10-2 qty 2
Poppet Type Bi-Directional Blocked A - B & B - Normally Closed		SBV11 10 * C A318W *** * 00	Model A318W Part No. 02-185376 Cartridge SBV11-10-C Cartridge Data Sheet Section A Cavity C-10-2
Poppet Type Bi-Directional Blocked A - B & B - Normally Open		SBV11 10 * O A318W *** * 00	Model A318W Part No. 02-185376 Cartridge SBV11-10-O Cartridge Data Sheet Section A Cavity C-10-2

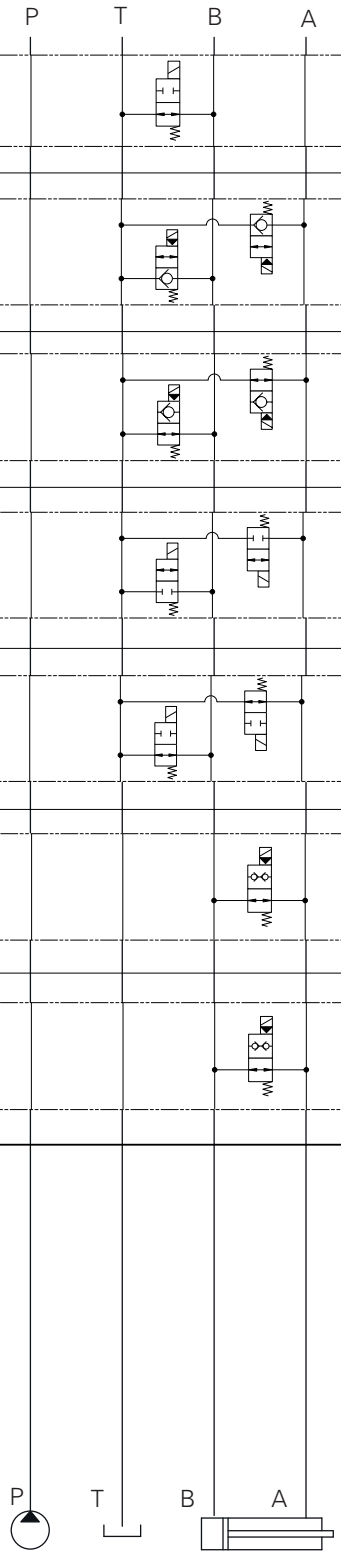

Where measurements are critical request certified drawings. We reserve the right to change specifications without notice.

Solenoid control & load control functions

⚠ Caution
Sandwich valve flow ratings are limited by the ratings of individual cartridges. Consult cartridge valve literature.

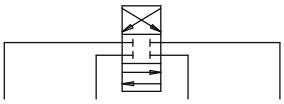

Function	Functional symbol	Model code	Housing kit
Solenoid Valve Spool Type Blocked A to B & B to A Normally Closed	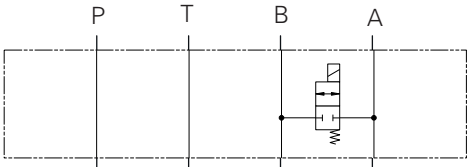	SV4 10 * C A318W *** * 00	Model A318W Part No. 02-185376 Cartridge SV4-10-C Cartridge Data Sheet Section A Cavity C-10-2
Solenoid Valve Spool Type Blocked A to B & B to A Normally Open		SV4 10 * O A318W *** * 00	Model A318W Part No. 02-185376 Cartridge SV4-10-O Cartridge Data Sheet Section A Cavity C-10-2
Solenoid 3-Way Selector on P	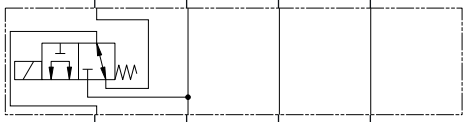	SV1 10 * 3 A326P *** * 00	Model A326P Part No. 02-185353 Cartridge SV1-10-3 Cartridge Data Sheet Section A Cavity C-10-3
Solenoid 3-Way Selector on P		SV4 10 * 3 A326P *** * 00	Model A326P Part No. 02-185353 Cartridge SV4-10-3 Cartridge Data Sheet Section A Cavity C-10-3
Manual Rotary Selector on P	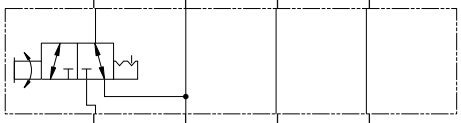	MRV3 10 * K A236P 00	Model A326P Part No. 02-185353 Cartridge MRV3-10-K-O Cartridge Data Sheet Section D Cavity C-10-3

Load control functions

Function	Functional symbol	Model code	Housing kit
Counterbalance Valve on A Pilot from B	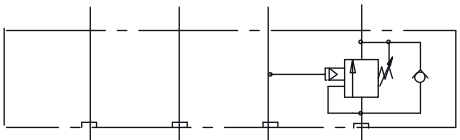	1CE30- * A323A-** * *	Model A323A Cartridge 1CE30 Cartridge Data Sheet Section F Cavity A6610
Counterbalance Valve on B Pilot from A	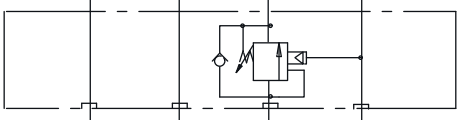	1CE30- * A323B-** * *	Model A323B Cartridge 1CE30 Cartridge Data Sheet Section F Cavity A6610
Counterbalance Valve On A & B Cross Piloted	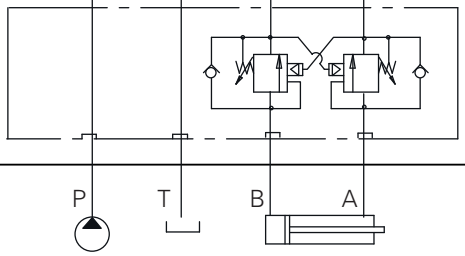	1CE30- * A323WA-** * */** ** Refer to page L-23 for model code breakdown	Model A323W Cartridge 1CE30 qty 2 Cartridge Data Sheet Section F Cavity A6610 qty 2

Where measurements are critical request certified drawings. We reserve the right to change specifications without notice.

Spacer/blanking/linking plates

⚠ Caution
Sandwich valve flow ratings are limited by the ratings of individual cartridges. Consult cartridge valve literature.

Note: O-Rings to be ordered separately.

Function	Functional symbol	Part number	
Spacer Plate 10 mm (.39) Thick	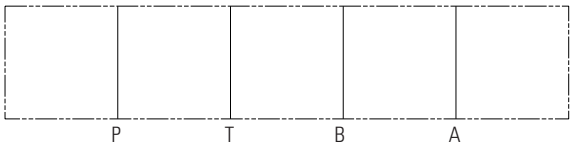	02-185273 Buna N O-Ring Kit Viton O-Ring Kit	 02-184951 02-185282
Blanking Plate	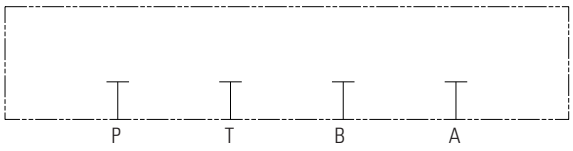	02-185274 Buna N O-Ring Kit Viton O-Ring Kit	 02-184951 02-185282
Linking Plate P to A with B & T Blocked	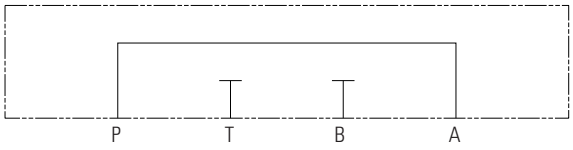	02-185275 Buna N O-Ring Kit Viton O-Ring Kit	 02-184951 02-185282
Linking Plate P to A & B to T	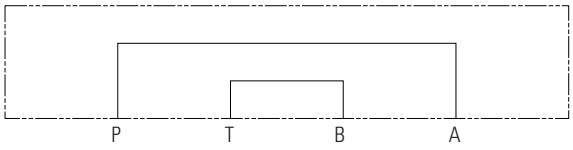	02-185276 Buna N O-Ring Kit Viton O-Ring Kit	 02-184951 02-185282
Linking Plate P to B & A to T	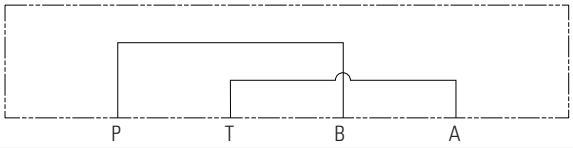	02-185277 Buna N O-Ring Kit Viton O-Ring Kit	 02-184951 02-185282
Linking Plate P to T with A & B Blocked	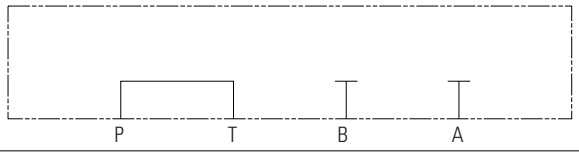	02-185278 Buna N O-Ring Kit Viton O-Ring Kit	 02-184951 02-185282
Linking Plate A to B with P & T Blocked	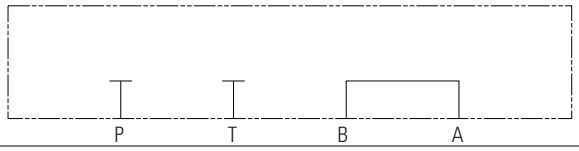	02-185279 Buna N O-Ring Kit Viton O-Ring Kit	 02-184951 02-185282
Linking Plate P to B with A & T Blocked	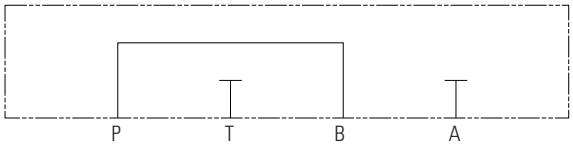	02-185280 Buna N O-Ring Kit Viton O-Ring Kit	 02-184951 02-185282
Linking Plate P to A & B with T Blocked	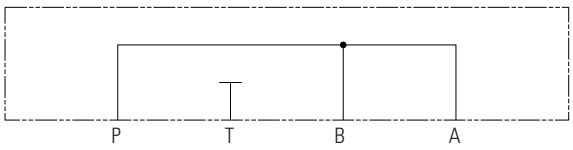	02-185281 Buna N O-Ring Kit Viton O-Ring Kit	 02-184951 02-185282

Viton® is a registered trademark of E.I.DuPont

Pressure control functions

Sandwich valves
ISO 05/DO5/NG 10/CETOP5 series

⚠ Caution
Sandwich valve flow ratings are limited by the ratings of individual cartridges. Consult cartridge valve literature.

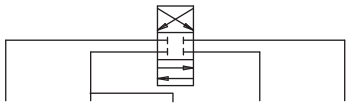

Function	Functional symbol	Model code	Housing kit	
Relief valve P-T	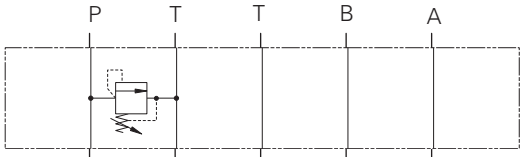	RV1-12**A521P**/****00	Model Part No. Cartridge Cartridge data sheet Cavity	A521P 6021302-001 RV1-12 Section E C-12-2
Relief valve A-T	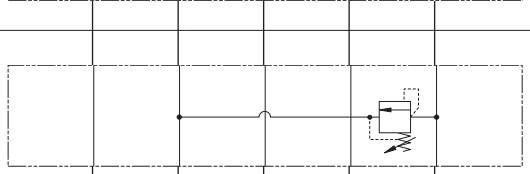	RV1-12**A521A**/****00	Model Part No. Cartridge Cartridge data sheet Cavity	A521A 6021299-001 RV1-12 Section E C-12-2
Relief valve B-T	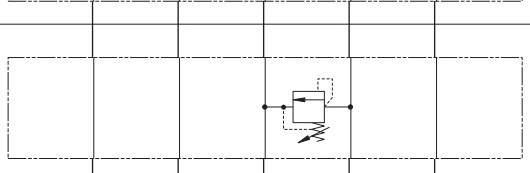	RV1-12**A521B**/****00	Model Part No. Cartridge Cartridge data sheet Cavity	A521B 6021295-001 RV1-12 Section E C-12-2
Relief valve P-T	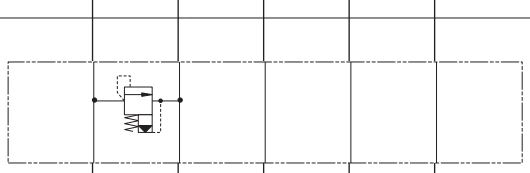	RV11-12**A521P**/***00	Model Part No. Cartridge Cartridge data sheet Cavity	A521P 6021302-001 RV11-12 Section E C-12-2
Relief valve A-T	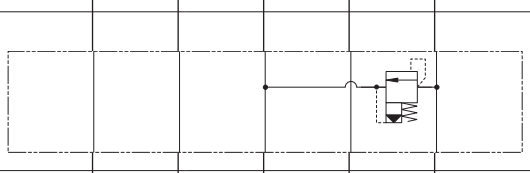	RV11-12**A521A**/***00	Model Part No. Cartridge Cartridge data sheet Cavity	A521A 6021299-001 RV11-12 Section E C-12-2
Relief valve B-T	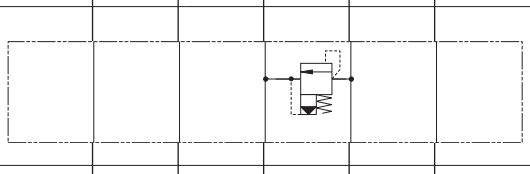	RV11-12**A521B**/***00	Model Part No. Cartridge Cartridge data sheet Cavity	A521B 6021295-001 RV11-12 Section E C-12-2
Dual Relief valve A-T, B-T	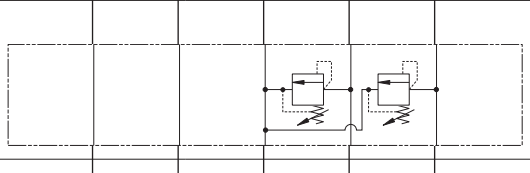	RV1-10**A511W A**/**B**/**	Model Part No. Cartridge Cartridge data sheet Cavity	A511W 6021337-001 RV1-10 [qty 2] Section E C-10-2 [qty 2]
Dual Relief valve A-T, B-T	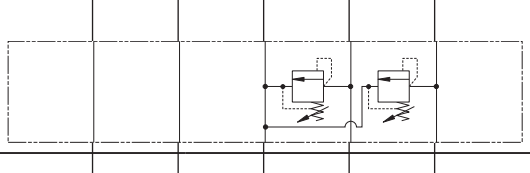	RV1-12**A512W A**/**B**/**	Model Part No. Cartridge Cartridge data sheet Cavity	A512W 6021184-001 RV1-12 [qty 2] Section E C-12-2 [qty 2]



Where measurements are critical request certified drawings. We reserve the right to change specifications without notice.

Pressure control functions

Sandwich valves
ISO 05/DO5/NG 10/CETOP5 series

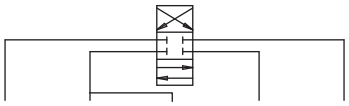

Function	Functional symbol	Model code	Housing kit	
Dual Relief Valve A-T, B-T	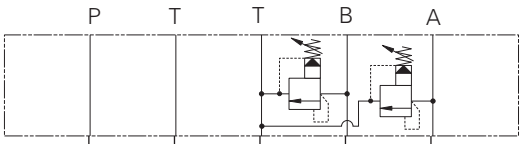	RV11-12**A512W A**/**B**/**	Model Part No. Cartridge Cartridge data sheet Cavity	A512W 6021184-001 RV11-12 [qty2] Section E C-12-2 [qty2]
Cross Port Relief Valve A-B		RV3-12**A521WA**/**B**/**	Model Part No. Cartridge Cartridge data sheet Cavity	A521W 6021158-001 RV3-12 [qty2] Section E C-12-2 [qty2]
Cross Port Relief Valve A-B		RV11-12**A521WA**/**B**/**	Model Part No. Cartridge Cartridge data sheet Cavity	A521W 6021158-001 RV11-12 [qty2] Section E C-12-2 [qty2]
Reducing Valve on P Drained to T		PRV12-12**A526P**/***00	Model Part No. Cartridge Cartridge data sheet Cavity	A526P 6021329-001 PRV12-12 Section E C-12-3
Reducing Valve on B Drained to T Reverse FF Check	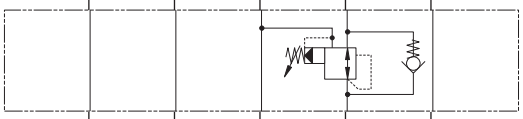	PRV12-12** A510B**/***00	Model Part No. Cartridge Cartridge data sheet Cavity	A510B 6021352-001 PRV12-12/CV11-12 Section E & G C-12-3/C-12-2

Where measurements are critical request certified drawings. We reserve the right to change specifications without notice.

Check functions

Sandwich valves
ISO 05/DO5/NG 10/CETOP5 series

⚠ Caution
Sandwich valve flow ratings are limited by the ratings of individual cartridges. Consult cartridge valve literature.

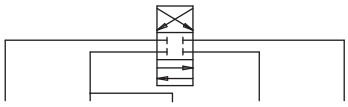

Function	Functional symbol	Model code	Housing kit	
Check Valve on P	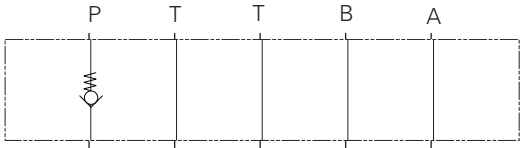	CV11-12*P A524P***00	Model Part No. Cartridge Cartridge data sheet Cavity	A524P 6021186-001 CV11-12 Section G C-12-2
Check Valve on A Free Flow Out	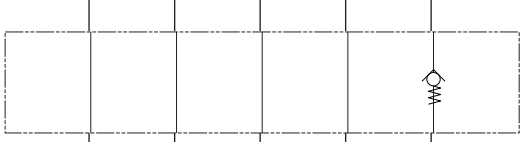	CV3-10*P A507A***00	Model Part No. Cartridge Cartridge data sheet Cavity	A507A 6021185-001 CV3-10 Section G C-10-2
Check Valve on A Free Flow out		CV11-12*P A514A ***00	Model Part No. Cartridge Cartridge data sheet Cavity	A514A 6021288-001 CV11-12 Section G C-12-2
Check in A Piloted from B		4CK90*A523A**00	Model Part No. Cartridge Cartridge data sheet Cavity	A523A 6021282-001 4CK90 Section G A12336
Check in A & B Cross Piloted	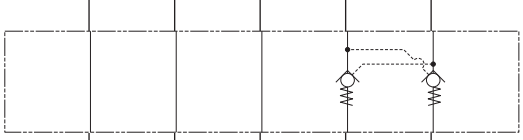	4CK90*A523W**00	Model Part No. Cartridge Cartridge data sheet Cavity	A523W 5999906-001 4CK90 (qty2) Section G A12336 (qty 2)
Check Valve on B Free Flow out		CV11-12*P A514B ***00	Model Part No. Cartridge Cartridge data sheet Cavity	A514B 6021273-001 CV11-12 Section G C-12-2
Shuttle Valve A and B Output External		DSV2-8*B A509W 00	Model Part No. Cartridge Cartridge data sheet Cavity	A509W 6021189-001 DSV2-8-B-0 Section G C-8-3

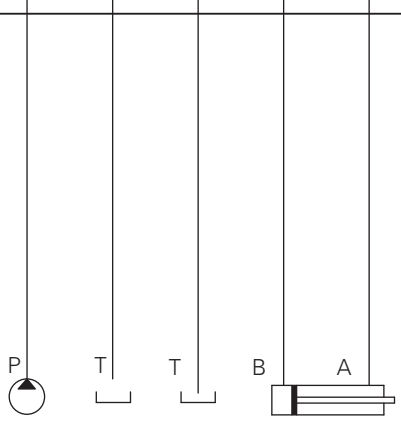

Where measurements are critical request certified drawings. We reserve the right to change specifications without notice.

Flow control functions

Sandwich valves
ISO 05/DO5/NG 10/CETOP5 series

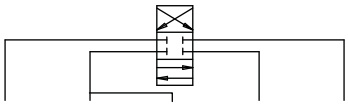

Function	Functional symbol	Model code	Housing kit	
Flow Regulator Pressure Compensated and Check Meter in P	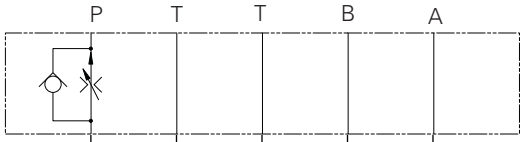	FAR1-12** A524P ***00	Model Part No. Cartridge Cartridge data sheet Cavity	A524P 6021186-001 FAR1-12 Section H C-12-2
Flow Regulator Pressure Compensated and Check Meter in A		FAR1-12** A514A ***00	Model Part No. Cartridge Cartridge data sheet Cavity	A514A 6021288-001 FAR1-12 Section H C-12-2
Flow Regulator Pressure Compensated and Check meter out A		FAR1-12** A524A ***00	Model Part No. Cartridge Cartridge data sheet Cavity	A524A 6021181-001 FAR1-12 Section H C-12-2
Flow Regulator Pressure Compensated and Check meter in B	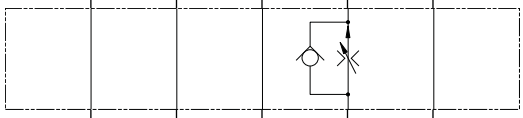	FAR1-12** A514B ***00	Model Part No. Cartridge Cartridge data sheet Cavity	A514B 6021273-001 FAR1-12 Section H C-12-2
Flow Regulator Pressure Compensated and Check meter out B	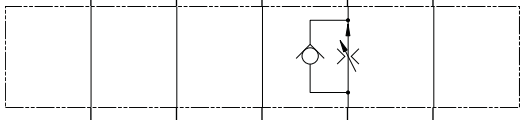	FAR1-12** A524B ***00	Model Part No. Cartridge Cartridge data sheet Cavity	A524B 6021182-001 FAR1-12 Section H C-12-2
Flow Regulator Pressure Compensated and Check meter in A & B	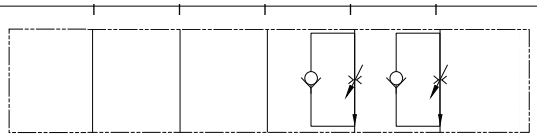	FAR1-12** A514W A***B***00	Model Part No. Cartridge Cartridge data sheet Cavity	A514W 4998388-001 FAR1-12 qty 2 Section H C-12-2 qty 2
Flow Regulator Pressure Compensated and Check meter out A & B	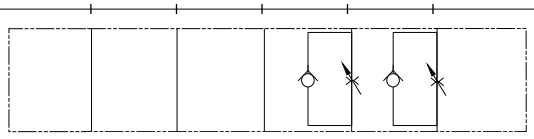	FAR1-12** A524W A***B***00	Model Part No. Cartridge Cartridge data sheet Cavity	A524W 4998389-001 FAR1-12 qty 2 Section H C-12-2 qty 2

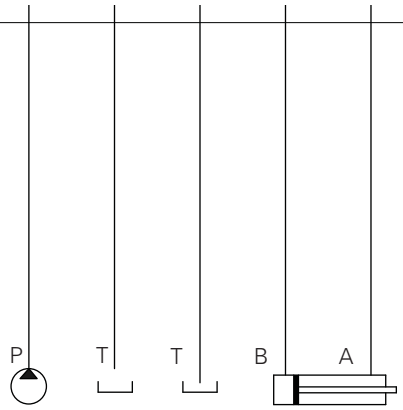

Where measurements are critical request certified drawings. We reserve the right to change specifications without notice.

Solenoid control functions

Sandwich valves
ISO 05/DO5/NG 10/CETOP5 series

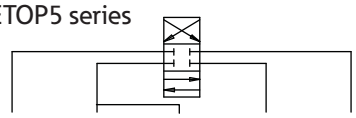

⚠ Caution
Sandwich valve flow ratings are limited by the ratings of individual cartridges. Consult cartridge valve literature.

Function	Functional symbol	Model code	Housing kit	
Solenoid 2/2 Poppet type (P-T) Normally Closed		SV3-12*C A525P *** *00	Model Part No. Cartridge Cartridge data sheet Cavity	A525P 6021293-001 SV3-12-C Section A C-12-2
Solenoid 2/2 Poppet type (P-T) Normally Open		SV3-12*0 A525P *** *00	Model Part No. Cartridge Cartridge data sheet Cavity	A525P 6021273-001 SV3-12-0 Section A C-12-2
Solenoid 2/2 Poppet type Blocked on A Normally Closed		SV3-12*C A524A *** *00	Model Part No. Cartridge Cartridge data sheet Cavity	A524A 6021181-001 SV3-12-C Section A C-12-2
Solenoid 2/2 Poppet type Blocked on A Normally Open		SV3-12*0A524A *** *00	Model Part No. Cartridge Cartridge data sheet Cavity	A524A 6021181-001 SV3-12-0 Section A C-12-2
Poppet type Blocked on B Normally Closed	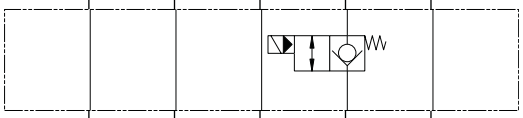	SV3-12*C A524B *** *00	Model Part No. Cartridge Cartridge data sheet Cavity	A524B 6021182-001 SV3-12-C Section A C-12-2
Poppet type Blocked on B Normally Open	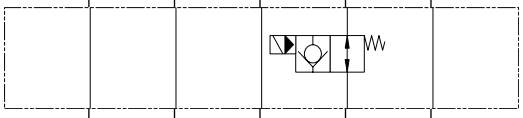	SV3-12*0 A524B *** *00	Model Part No. Cartridge Cartridge data sheet Cavity	A524B 6021182-001 SV3-10-0 Section A C-12-2
Poppet type Load Holding on A & B Normally Closed	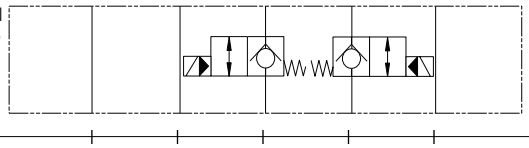	SV3-12*C A524W *** *00	Model Part No. Cartridge Cartridge data sheet Cavity	A524W 4998379-001 SV3-12-C qty 2 Section A C-12-2 qty 2
Poppet type Load Holding on A & B Normally Closed	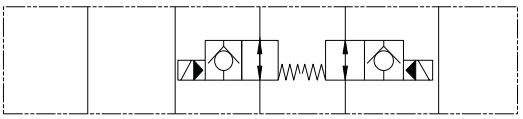	SV3-12*0 A524W*** *00	Model Part No. Cartridge Cartridge data sheet Cavity	A524W 4998379-001 SV3-12-0 qty 2 Section A C-12-2 qty 2
Poppet type Load Holding on A Normally Closed	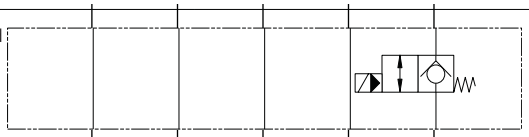	SV3-12*C A514A *** *00	Model Part No. Cartridge Cartridge data sheet Cavity	A514A 6021288-001 SV3-12-C Section A C-12-2
Poppet type Load Holding on A Normally Open	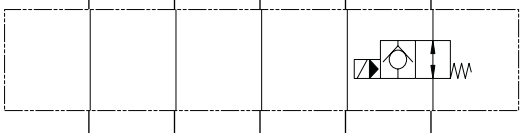	SV3-12*0 A514A *** *00	Model Part No. Cartridge Cartridge data sheet Cavity	A514A 6021288-001 SV3-12-0 Section A C-12-2
Poppet type Load Holding on B Normally Open	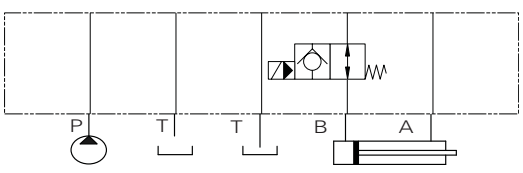	SV3-12*0 * A514A ***00	Model Part No. Cartridge Cartridge data sheet Cavity	A514A 6021288-001 SV3-10-0 Section A C-12-2

Where measurements are critical request certified drawings. We reserve the right to change specifications without notice.

⚠ Caution

Sandwich valve flow ratings are limited by the ratings of individual cartridges. Consult cartridge valve literature.

Function	Functional Symbol	Model Code	Housing Kit	
Poppet type Load Holding on B Normally Closed	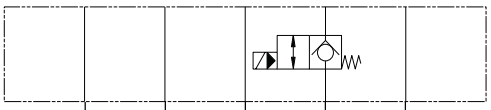	SV3-12-C A514B *** *00	Model Part No. Cartridge Cartridge data sheet Cavity	A514B 6021273-001 SV3-12-C Section A C-12-2
Poppet type Load Holding on B Normally Open	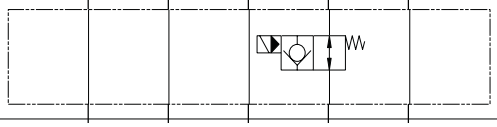	**SV3-12*0 A514B *** *00**	**Model Part No. Cartridge Cartridge data sheet Cavity**	**A514B 6021273-001 SV3-12-0 Section A C-12-2**
Poppet type Load Holding on A & B Normally Closed	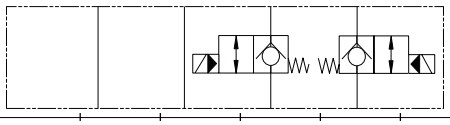	**SV3-12*C A514W *** *00**	**Model Part No. Cartridge Cartridge data sheet Cavity**	**A514W 4998388-001 SV3-12-C qty 2 Section A C-12-2 qty 2**
Poppet type Load Holding on A & B Normally Closed	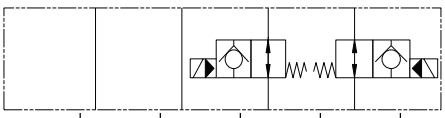	**SV3-12*0 A514W*** *00**	**Model Part No. Cartridge Cartridge data sheet Cavity**	**A514W 4998388-001 SV3-12-0 qty 2 Section A C-12-2 qty 2**
Poppet Bi-Directional Load Holding on A Normally Closed		SBV11-10*C A514A *** *00	Model Part No. Cartridge Cartridge data sheet Cavity	A514A 6021181-001 SBV11-12-C Section A C-12-2
Poppet Bi-Directional Load Holding on A Normally Open		SBV11-10*0 A514A *** *00	Model Part No. Cartridge Cartridge data sheet Cavity	A514A 6021181-001 SBV11-12-0 Section A C-12-2
Poppet Bi-Directional Load Holding on B Normally Closed	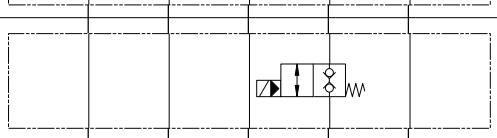	SBV11-10*C A514B *** *00	Model Part No. Cartridge Cartridge data sheet Cavity	A514B 6021273-001 SBV11-12-C Section A C-12-2
Poppet Bi-Directional Load Holding on B Normally Open	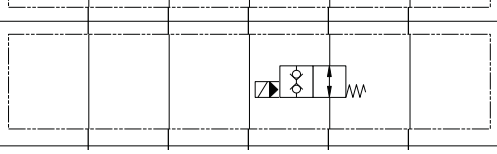	SBV11-10*0 A514B *** *00	Model Part No. Cartridge Cartridge data sheet Cavity	A514B 6021273-001 SBV11-12-0 Section A C-12-2
Poppet Bi-Directiona Load Holdinç on A & B Normally Clc	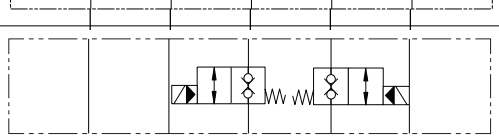	SBV11-12*C A514W *** *00	Model Part No. Cartridge Cartridge data sheet Cavity	A514W 4998388-001 SBV11-12-C qty 2 Section A C-12-2 qty 2
Poppet Bi-Directional Load Holding on A & B Normally Open	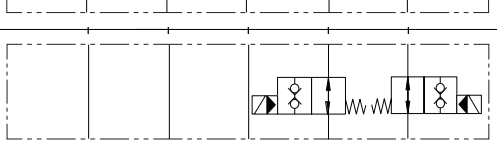	SBV11-12*0 A514W *** *00	Model Part No. Cartridge Cartridge data sheet Cavity	A514W 4998388-001 SBV11-12-0 qty 2 Section A C-12-2 qty 2
Poppet Bi-Directional Blocked A and B Normally Closed		SBV11-12*C A518W *** *00	Model Part No. Cartridge Cartridge data sheet Cavity	A518W 6021277-001 SBV11-12-C Section A C-12-2
Poppet Bi-Directional Blocked A and B Normally Open	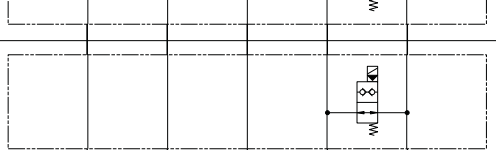	SBV11-12*0 A518W *** *00	Model Part No. Cartridge Cartridge data sheet Cavity	A518W 6021277-001 SBV11-12-0 Section A C-12-2
Solenoid 3-Way Selector on P	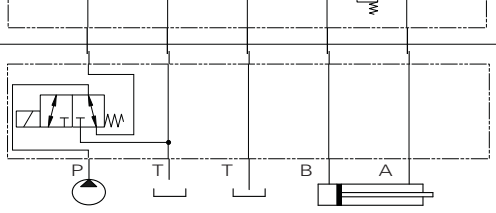	SV11-12*3 A526P *** *00	Model Part No. Cartridge Cartridge data sheet Cavity	A526P 6021329-001 SV11-12-3 Section A C-12-3

Where measurements are critical request certified drawings. We reserve the right to change specifications without notice.

Load control functions

⚠ Caution
Sandwich valve flow ratings are limited by the ratings of individual cartridges. Consult cartridge valve literature.

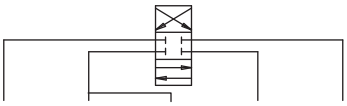

Function	Functional symbol	Model code	Housing kit
Overcenter in A Pilot from B	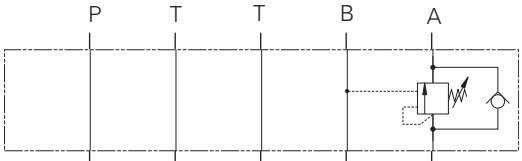	1CE90 * A523AA 20S/*B20S/** **	Model A523A Part No. 6021282-001 Cartridge 1CE90 Cartridge Data Sheet Section F Cavity A12336
Overcenter in A & B Cross Piloted	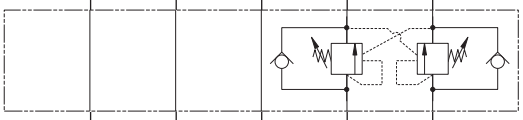	1CE90 * A523WA 20S/*B20S/** **	Model A523W Part No. 5999906-001 Cartridge 1CE90 qty 2 Cartridge Data Sheet Section F Cavity A12336 qty 2

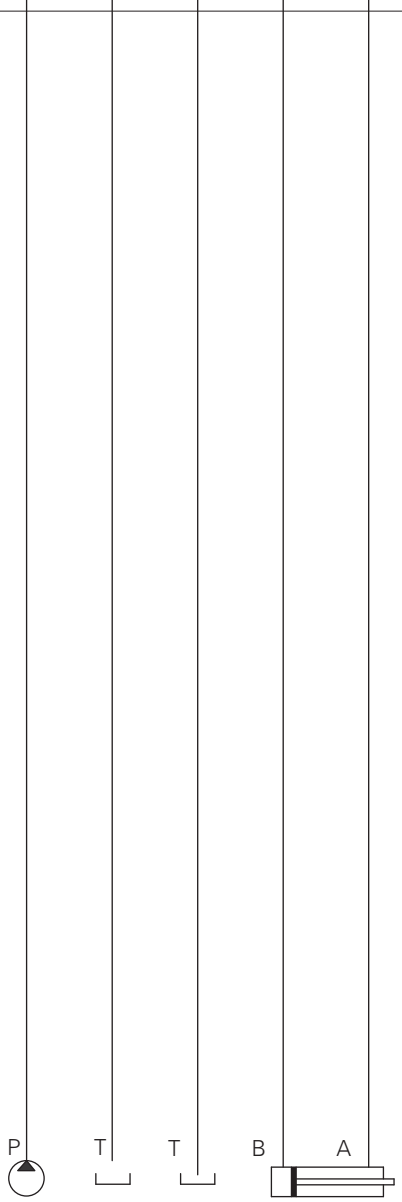

Where measurements are critical request certified drawings. We reserve the right to change specifications without notice.

Blanking and linking plates

⚠ Caution
Sandwich valve flow ratings are limited by the ratings of individual cartridges. Consult cartridge valve literature.

Note: O-Rings to be ordered separately.

Function	Functional symbol	Part number
Blanking Plate	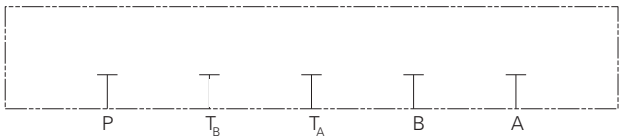	6030861-001 Buna N O-Ring Kit 9900941-000 Viton O-Ring Kit 9900942-000
Linking Plate P to A with B & T Blocked	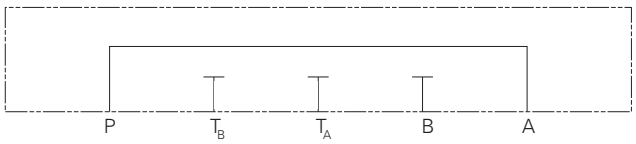	6030883-001 Buna N O-Ring Kit 9900941-000 Viton O-Ring Kit 9900942-000
Linking Plate P to A & B to T	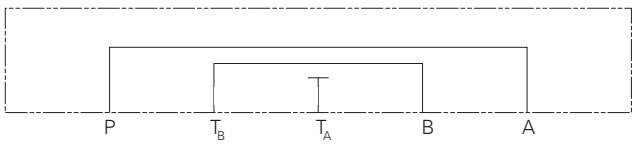	6030885-001 Buna N O-Ring Kit 9900941-000 Viton O-Ring Kit 9900942-000
Linking Plate P to B & A to T	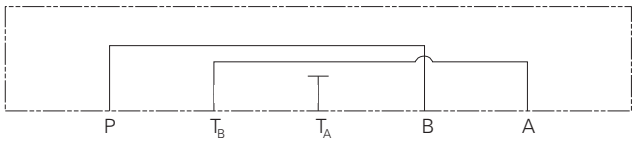	6030887-001 Buna N O-Ring Kit 9900941-000 Viton O-Ring Kit 9900942-000
Linking Plate P to T with A & B Blocked	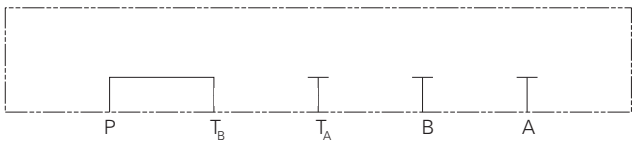	6030889-001 Buna N O-Ring Kit 9900941-000 Viton O-Ring Kit 9900942-000
Linking Plate A to B with P & T Blocked	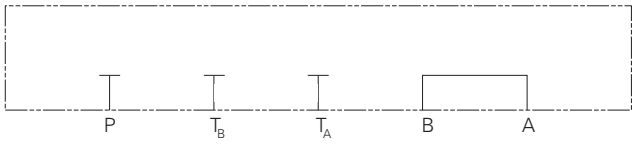	6030891-001 Buna N O-Ring Kit 9900941-000 Viton O-Ring Kit 9900942-000
Linking Plate P to B with A & T Blocked	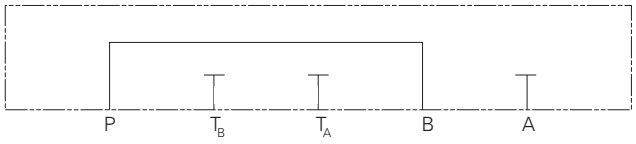	6030893-001 Buna N O-Ring Kit 9900941-000 Viton O-Ring Kit 9900942-000
Linking Plate P to A & B with T Blocked	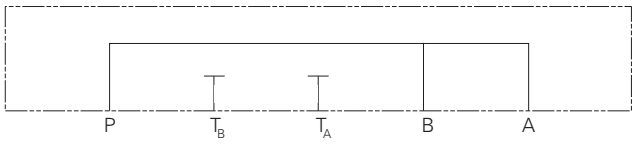	6030895-001 Buna N O-Ring Kit 9900941-000 Viton O-Ring Kit 9900942-000

Viton® is a registered trademark of E.I.DuPont

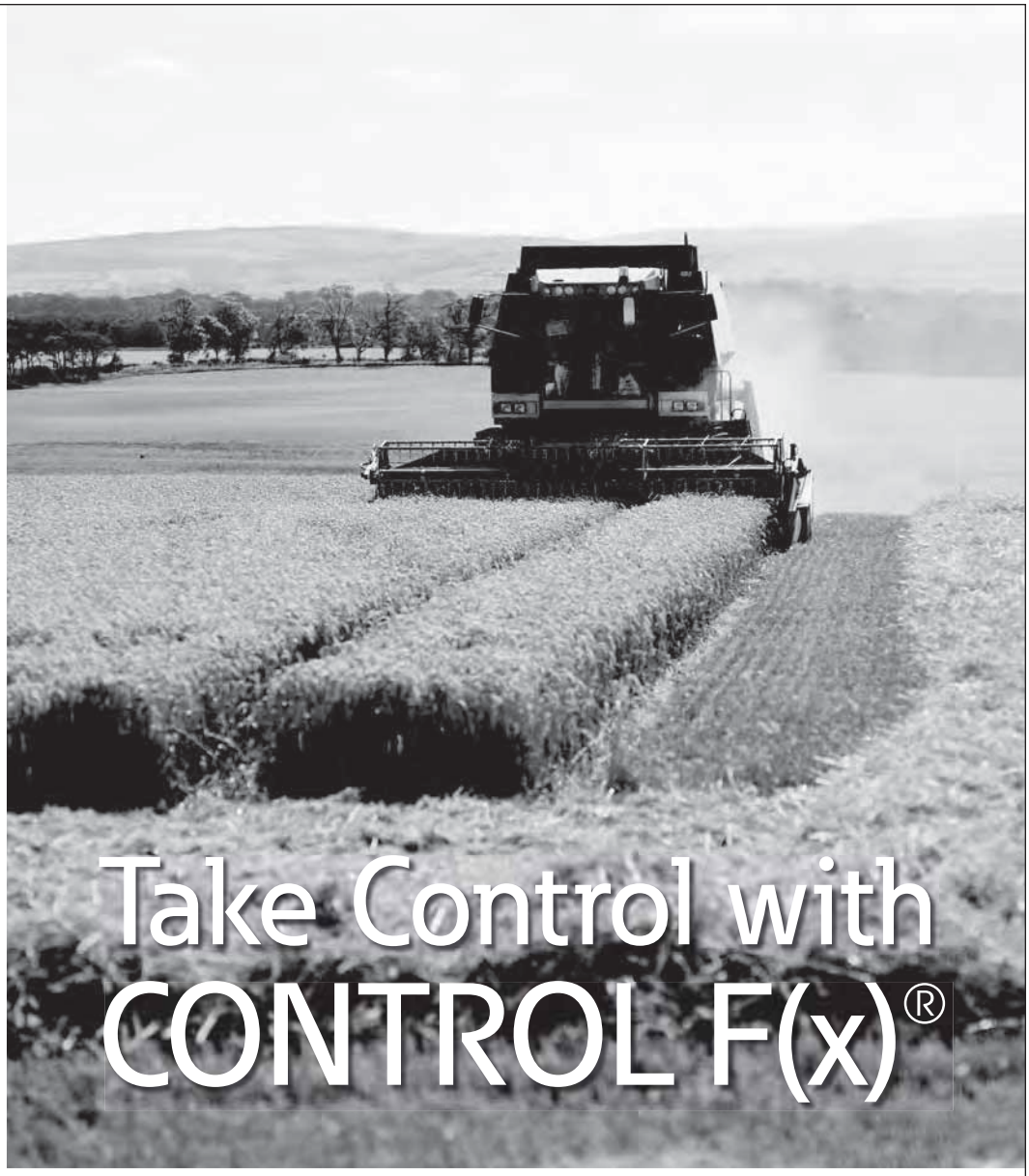

Take Control with CONTROL F(x)®



CONTROL F(x)®
Programming Software



EFX Electronic
Controllers



SFX & VFX High Performance
Controllers



VFX LCD Display

EATON
Powering Business Worldwide

EATON
Powering Business Worldwide

F(x)™ Software and Electronics

Eaton CONTROL F(x)® software and EFX, SFX and VFX controllers and displays let you develop programs for controlling electrohydraulic systems. With the CONTROL F(x) graphical interface, you can create, debug, and monitor control logic using industry standards and Eaton supplied functions. This means you can integrate electrohydraulic systems easily and efficiently. You get reliable results while saving process time—and money.

Solenoid valves

Poppet and Spool type solenoid actuated valves for applications up to 350 bar (5000 psi) and 227 L/min (60 USgpm)

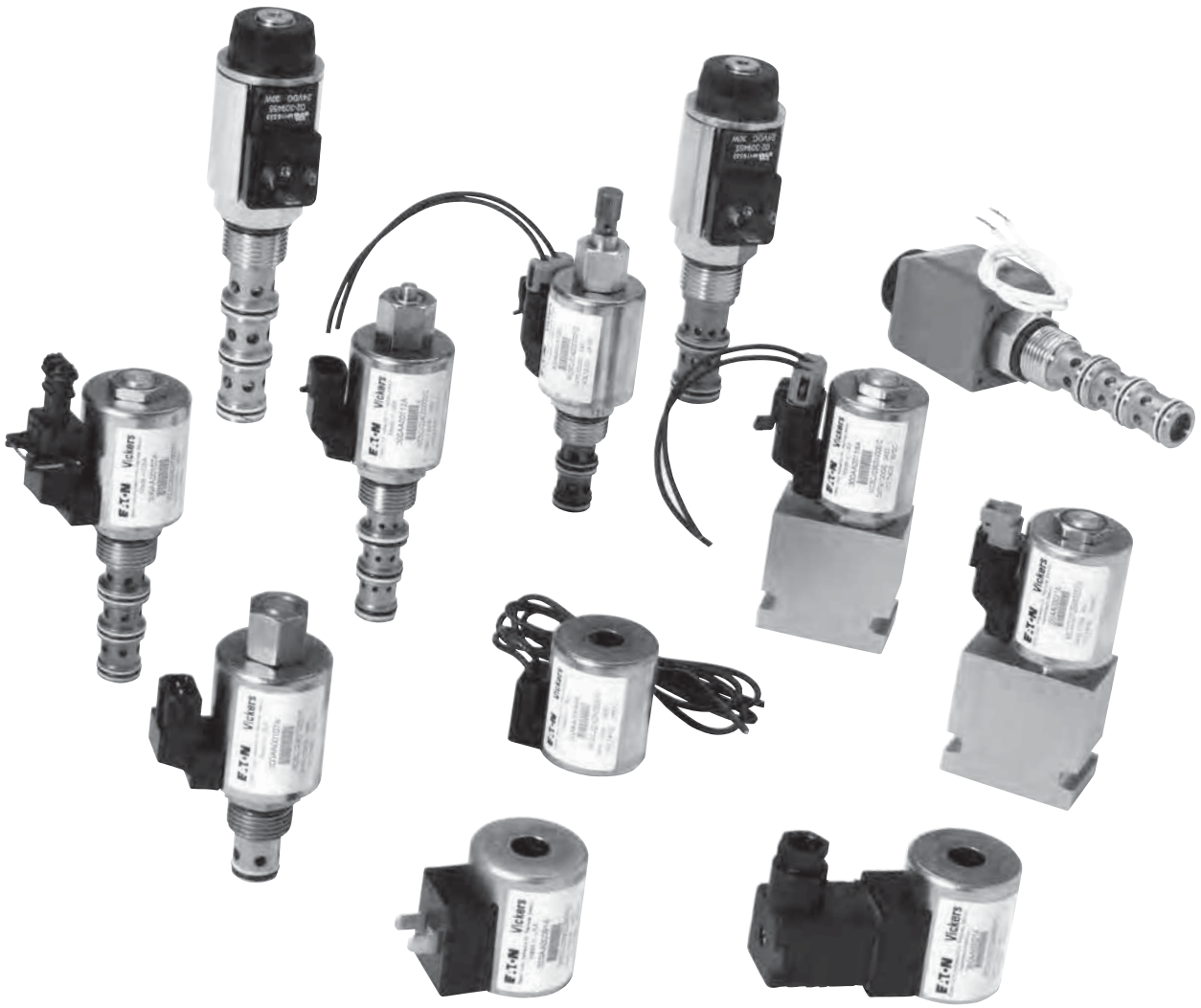

Powering Business Worldwide

Solenoid valves

SOLENOID VALVES....A-4

SV5-8-C/CM - SOLENOID VALVE....A-12

SV15-8-C/CM - SOLENOID VALVE....A-14

SBV2-8-C - SOLENOID BI-DIRECTIONAL VALVE....A-16

SBV12-8-C/CM - SOLENOID BI-DIRECTIONAL VALVE....A-18

S217A - DIRECTIONAL CONTROL VALVE....A-20

S519 - DIRECTIONAL CONTROL VALVE....A-22

SBV11-8-C/CM - SOLENOID BI-DIRECTIONAL VALVE....A-24

SV1-10-C/CM/CR - SOLENOID VALVE....A-26

SV11-10-C/CM - SOLENOID VALVE....A-28

SV3-8-C/CM - SOLENOID VALVE....A-30

SV3-10-C/CM/CR - SOLENOID VALVE....A-32

SV13-10-C/CM - SOLENOID VALVE....A-34

SBV1-10-C - SOLENOID VALVE....A-36

SBV11-10-C - SOLENOID VALVE....A-38

SV3-12-C/CM/CR - SOLENOID VALVE....A-40

SV13-12-C/CM - SOLENOID VALVE....A-42

SBV1-12-C - SOLENOID VALVE....A-44

SBV11-12-C - SOLENOID VALVE....A-46

SV1-16-C/CM/CR - SOLENOID VALVE....A-48

SV13-16-C/CM - SOLENOID VALVE....A-50

SV2-20-C/CM/CR - SOLENOID VALVE....A-52

SV13-20-C/CM - SOLENOID VALVE....A-54

SV4-8-C/CM - SOLENOID VALVE....A-56

SV14-8-C/CM - SOLENOID VALVE....A-58

SV4-10-C/CM/CR - SOLENOID VALVE....A-60

SV14-10-C/CM - SOLENOID VALVE....A-62

S207 - SOLENOID VALVE....A-64

SV5-8-O/OP/OS - SOLENOID VALVE....A-66

SV15-8-O/OP/OS - SOLENOID VALVE....A-68

SBV11-8-O - SOLENOID BI-DIRECTIONAL VALVE....A-70

SV3-8-O/OP/OS - SOLENOID VALVE....A-72

SV3-10-O/OP/OS - SOLENOID VALVE....A-74

SV5-10-O/OP/OS - SOLENOID VALVE....A-76

SV15-10-O/OP/OS - SOLENOID VALVE....A-78

SV13-10-O/OP/OS - SOLENOID VALVE....A-80

SBV11-10-O - SOLENOID BI-DIRECTIONAL VALVE....A-82

SV3-12-O/OP/OS - SOLENOID VALVE....A-84

SV13-12-O/OP/OS - SOLENOID VALVE....A-86

SBV11-12-O - SOLENOID VALVE....A-88

SV3-16-O/OP/OS - SOLENOID VALVE....A-90

SV13-16-O/OP/OS - SOLENOID VALVE....A-92

SV3-20-O/OP/OS - SOLENOID VALVE....A-94

SV13-20-O/OP/OS - SOLENOID VALVE....A-96

SV4-8-O/OM - SOLENOID VALVE....A-98

SV14-8-O/OM - SOLENOID VALVE....A-100

SV4-10-O/OM/OR - SOLENOID VALVE....A-102

SV14-10-O/OM - SOLENOID VALVE....A-104

SV1-8-3/3M - SOLENOID VALVE....A-106

SV11-8-3/3M - SOLENOID VALVE....A-108

SV4-8-3/3P - SOLENOID VALVE....A-110

S229 - SOLENOID VALVE....A-112

S520(H) - SOLENOID VALVE....A-114

S521(H) - SOLENOID VALVE....A-116

S525(H) - SOLENOID VALVE....A-118

S526 - SOLENOID VALVE....A-120

SV1-10-3/3M/3R - SOLENOID VALVE....A-122

SV11-10-3/3M - SOLENOID VALVE....A-124

SV11A/B-10-3 - SOLENOID VALVE....A-126

SV4-10-3/3P/3S - SOLENOID VALVE....A-128

SV1M-12-3 - SOLENOID VALVE....A-130

SV11M-12-3 - SOLENOID VALVE....A-132

SV2M-12-3P - SOLENOID VALVE....A-134

SV12M-12-3 - SOLENOID VALVE....A-136

SV4M-12-3P - SOLENOID VALVE A-138
SV14M-12-3 - SOLENOID VALVE A-140
SV14A/B-12-3 - SOLENOID VALVE.....A-141
SV1-8-4/4M - SOLENOID VALVE.....A-142
SV11-8-4/4M - SOLENOID VALVE A-144
SV2-8-4/4M - SOLENOID VALVE A-146
SV12-8-4/4M - SOLENOID VALVE A-148
SV1-10-4/4M/4R - SOLENOID VALVE.....A-150
S542 - SOLENOID VALVE A-152
SV11-10-4/4M - SOLENOID VALVE A-154
S541 - SOLENOID VALVE A-156
SV2-10-4/4M/4R - SOLENOID VALVE.....A-158
SV3-10-4/4M/4R - SOLENOID VALVE.....A-160
SV4-10-4/4M/4R - SOLENOID VALVE.....A-162
SV5-10-4/4M/4R - SOLENOID VALVE.....A-164
SV7-10-4/4P/4S - SOLENOID VALVE A-166
SV17M-10-4P - SOLENOID VALVE A-168
SV2M-12-4 - SOLENOID VALVE A-170
SV12M-12-4 - SOLENOID VALVE A-172
SV3M-12-4 - SOLENOID VALVE A-174
SV13M-12-4 - SOLENOID VALVE A-176
SV5M-12-4 - SOLENOID VALVE A-178
SV15M-12-4 - SOLENOID VALVE A-180
SV7M-12-4 - SOLENOID VALVE A-182
SV17M-12-4 - SOLENOID VALVE A-184
SV9-8-E - SOLENOID VALVE A-186
SV9-8-F - SOLENOID VALVE A-187
SV9-8-B - SOLENOID VALVE A-188
SV9-8-A - SOLENOID VALVE.....A-189
SV9-8 - SOLENOID VALVE.....A-190
SV9-10-A - SOLENOID VALVE A-192
SV9-10-B - SOLENOID VALVE A-193
SV9-10-E - SOLENOID VALVE A-194
SV9-10-F - SOLENOID VALVE.....A-195
SV9-10 - SOLENOID VALVE A-196
SV9M-10-E - SOLENOID VALVE A-198
SV9M-10-F - SOLENOID VALVE A-199
SV9M-10-B - SOLENOID VALVE..... A-200
SV9M-10-A - SOLENOID VALVE.....A-201
SV9M-10 - SOLENOID VALVE A-202
S SERIES - MANUAL OVERRIDES.....A-204
MANUAL OVERRIDE OPTIONS A-206

Solenoid valves

Section contents/valve locator

A

Functional symbol

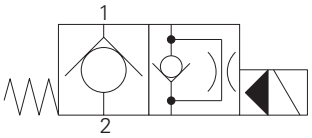

Model	Cavity	Flow rating	Typical pressure	Page
Solenoid 2/2, NC, poppet		L/min (USgpm)	bar (psi)	
SV5-8-C	C-8-2	23 (6)	210 (3000)	A-12
SV15-8-C	C-8-2	37 (10)	350 (5000)	A-14
SV1-10-C	C-10-2	45 (12)	210 (3000)	A-26
SV11-10-C	C-10-2	45 (12)	350 (5000)	A-28
SV12-10-C	C-10-2	23 (6)	350 (5000)	A-28

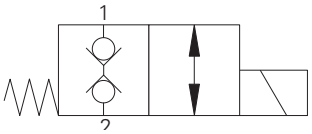

Model	Cavity	Flow rating	Typical pressure	Page
Solenoid 2/2, NC, bi-directional, poppet		L/min (USgpm)	bar (psi)	
SBV2-8-C	C-8-2	1 (0.25)	210 (3000)	A-16
SBV12-8-C	C-8-2	1 (0.25)	350 (5000)	A-18
S217A	A879	10 (2.6)	210 (3000)	A-20
S519A	A879	12 (3)	210 (3000)	A-22

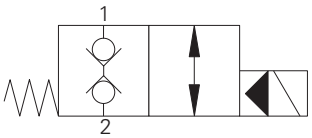

Model	Cavity	Flow rating	Typical pressure	Page
Solenoid 2/2, NC, bi-directional, poppet		L/min (USgpm)	bar (psi)	
SBV11-8-C	C-8-2	60 (15)	350 (5000)	A-24
SBV1-10-C	C-10-2	76 (20)	210 (3000)	A-26
SBV11-10-C	C-10-2	76 (20)	350 (5000)	A-28
SBV1-12-C	C-12-2/2U	114 (30)	210 (3000)	A-44
SBV11-12-C	C-12-2/2U	114 (30)	350 (5000)	A-46

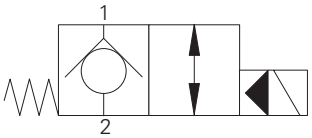

Model	Cavity	Flow rating	Typical pressure	Page
Solenoid 2/2, NC, poppet		L/min (USgpm)	bar (psi)	
SV3-8-C	C-8-2	23 (6)	210 (3000)	A-30
SV3-10-C	C-10-2	45 (12)	210 (3000)	A-32
SV13-10-C	C-10-2	45 (12)	350 (5000)	A-34
SV3-12-C	C-12-2	114 (30)	210 (3000)	A-40
SV13-12-C	C-12-2	114 (30)	350 (5000)	A-42
SV1-16-C	C-16-2	132 (35)	210 (3000)	A-48
SV13-16-C	C-16-2	132 (35)	350 (5000)	A-50
SV2-20-C	C-20-2	227 (60)	210 (3000)	A-52
SV13-20-C	C-20-2	227 (60)	350 (5000)	A-54

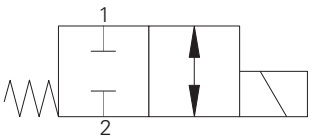

Model	Cavity	Flow rating	Typical pressure	Page
Solenoid 2/2, NC, spool		L/min (USgpm)	bar (psi)	
SV4-8-C	C-8-2	11 (3)	210 (3000)	A-56
SV14-8-C	C-8-2	11 (3)	350 (5000)	A-58
SV4-10-C	C-10-2	23 (6)	210 (3000)	A-60
SV14-10-C	C-10-2	23 (6)	350 (5000)	A-62

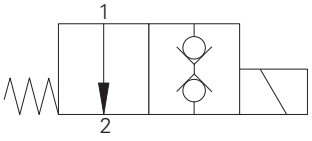

Model	Cavity	Flow rating	Typical pressure	Page
Solenoid 2/2, NO, poppet		L/min (USgpm)	bar (psi)	
S207	A879	1 (.25)	350 (5000)	A-64

Functional symbol

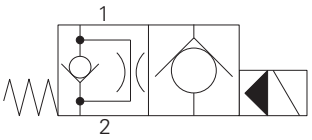

Model	Cavity	Flow rating	Typical pressure	Page
Solenoid 2/2, NO, poppet		L/min (USgpm)	bar (psi)	
SV5-8-0	C-8-2	23 (6)	210 (3000)	A-66
SV15-8-0	C-8-2	37 (10)	350 (5000)	A-68
SV5-10-0	C-10-2	45 (12)	210 (3000)	A-76
SV15-10-0	C-10-2	45 (12)	350 (5000)	A-78

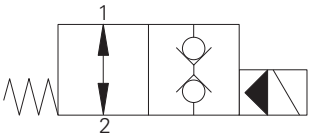

Model	Cavity	Flow rating	Typical pressure	Page
Solenoid 2/2, NO, bi-directional, poppet		L/min (USgpm)	bar (psi)	
SBV11-8-0	C-8-2	60 (15)	350 (5000)	A-70
SBV11-10-0	C-10-2	76 (20)	350 (5000)	A-82
SBV11-12-0	C-12-2/2U	114 (30)	350 (5000)	A-88

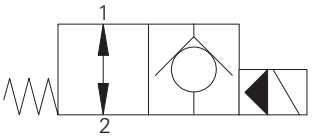

Model	Cavity	Flow rating	Typical pressure	Page
Solenoid 2/2, NO, poppet		L/min (USgpm)	bar (psi)	
SV3-8-0	C-8-2	23 (6)	210 (3000)	A-72
SV3-10-0	C-10-2	45 (12)	210 (3000)	A-74
SV13-10-0	C-10-2	45 (12)	350 (5000)	A-80
SV3-12-0	C-12-2/2U	114 (30)	210 (3000)	A-84
SV13-12-0	C-12-2/2U	114 (30)	350 (5000)	A-86
SV3-16-0	C-16-2	132 (35)	210 (3000)	A-90
SV13-16-0	C-16-2	132 (35)	350 (5000)	A-92
SV3-20-0	C-20-2	227 (60)	210 (3000)	A-94
SV13-20-0	C-20-2	227 (60)	350 (5000)	A-96

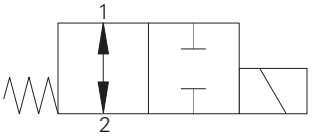

Model	Cavity	Flow rating	Typical pressure	Page
Solenoid 2/2, NO, spool		L/min (USgpm)	bar (psi)	
SV4-8-0	C-8-2	13 (4)	210 (3000)	A-98
SV14-8-0	C-8-2	13 (4)	350 (5000)	A-100
SV4-10-0	C-10-2	23 (6)	210 (3000)	A-102
SV14-10-0	C-10-2	23 (6)	350 (5000)	A-104

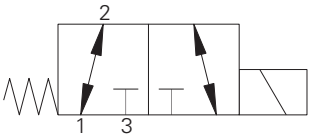

Model	Cavity	Flow rating	Typical pressure	Page
Solenoid 3/2, spool		L/min (USgpm)	bar (psi)	
SV4-8-3	C-8-3	13 (4)	210 (3000)	A-110
SV4-10-3	C-10-3	23 (6)	210 (3000)	A-128
S521N	C-10-3	44 (11)	210 (3000)	A--
SV4A/B-12-3	C-12-3	42 (11)	210 (3000)	A--
SV14A/B-12-3	C-12-3	42 (11)	350 (5000)	A-141

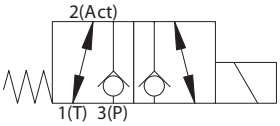

Model	Cavity	Flow rating	Typical pressure	Page
Solenoid 3/2, poppet		L/min (USgpm)	bar (psi)	
S229	A3531	12 (3)	210 (3000)	A-112

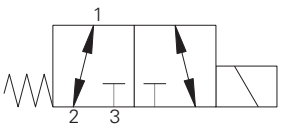

Model	Cavity	Flow rating	Typical pressure	Page
Solenoid 3/2, spool		L/min (USgpm)	bar (psi)	
S520H	C-10-3	40 (10)	210 (3000)	A-114

Solenoid valves

Valve locator

A

Functional symbol

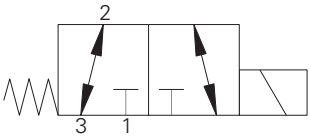

Model	Cavity	Flow rating	Typical pressure	Page
Solenoid 3/2, spool		L/min (USgpm)	bar (psi)	
S525H	C-10-3	30 (8)	210 (3000)	A-118

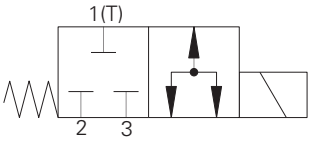

Model	Cavity	Flow rating	Typical pressure	Page
Solenoid 3/2, spool		L/min (USgpm)	bar (psi)	
S526N-2	C-10-3	35 (9)	210 (3000)	A-120

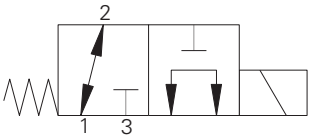

Model	Cavity	Flow rating	Typical pressure	Page
Solenoid 3/2, spool		L/min (USgpm)	bar (psi)	
SV1-8-3	C-8-3	11 (3)	210 (3000)	A-106
SV11-8-3	C-8-3	11 (3)	350 (5000)	A-108
SV1-10-3	C-10-3	23 (6)	210 (3000)	A-122
SV11-10-3	C-10-3	23 (6)	350 (5000)	A-124

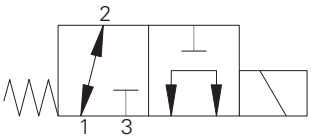

Model	Cavity	Flow rating	Typical pressure	Page
Solenoid 3/2, spool		L/min (USgpm)	bar (psi)	
SV11A/B-10-3	C-10-3	23 (6)	350 (5000)	A-126
SV1A/B-12-3	C-12-3	38-42 (10-11)	210 (3000)	A--
SV11A/B-12-3	C-12-3	38 (10)	350 (5000)	A--

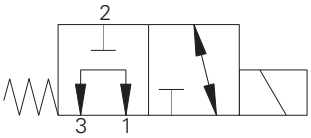

Model	Cavity	Flow rating	Typical pressure	Page
Solenoid 3/2, spool		L/min (USgpm)	bar (psi)	
SV2A/B-12-3	C-12-3	30-38 (8-10)	210 (3000)	A--
SV12A/B-12-3	C-12-3	30 (8)	350 (5000)	A--

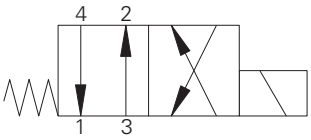

Model	Cavity	Flow rating	Typical pressure	Page
Solenoid 4/2, spool		L/min (USgpm)	bar (psi)	
SV1-8-4	C-8-4	11 (3)	210 (3000)	A-142
SV11-8-4	C-8-4	11 (3)	350 (5000)	A-144
SV1-10-4	C-10-4	23 (6)	210 (3000)	A-150
SV11-10-4	C-10-4	23 (6)	350 (5000)	A-154
S542	C-10-4	25 (9)	210 (3000)	A-152

Functional symbol

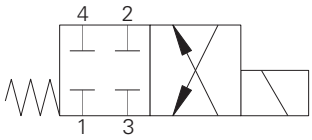

Model	Cavity	Flow rating	Typical pressure	Page
Solenoid 4/2, spool		**L/min (USgpm)**	**bar (psi)**	
SV2-8-4	C-8-4	13 (4)	210 (3000)	A-146
SV12-8-4	C-8-4	13 (4)	350 (5000)	A-148
SV2-10-4	C-10-4	23 (6)	210 (3000)	A-158
SV2A/B-12-4	C-12-4	42 (11)	210 (3000)	A--
SV12A/B-12-4	C-12-4	42 (11)	350 (5000)	A--
S541	C-10-4	30 (8)	210 (3000)	A-156

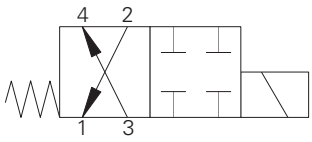

Model	Cavity	Flow rating	Typical pressure	Page
Solenoid 4/2, spool		**L/min (USgpm)**	**bar (psi)**	
SV3-10-4	C-10-4	23 (6)	210 (3000)	A-160
SV3A/B-12-4	C-12-4	53 (14)	210 (3000)	A--
SV13A/B-12-4	C-12-4	35 (14)	350 (5000)	A--

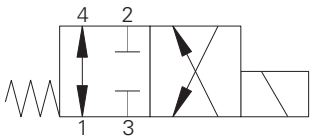

Model	Cavity	Flow rating	Typical pressure	Page
Solenoid 4/2, spool		**L/min (USgpm)**	**bar (psi)**	
SV4-10-4	C-10-4	23 (6)	210 (3000)	A-162

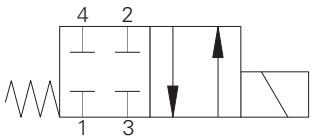

Model	Cavity	Flow rating	Typical pressure	Page
Solenoid 4/2, spool		**L/min (USgpm)**	**bar (psi)**	
SV5-10-4	C-10-4	23 (6)	210 (3000)	A-164
SV5A/B-12-4	C-12-4	46 (12)	210 (3000)	A-178
SV15A/B-12-4	C-12-4	53 (14)	350 (5000)	A-180

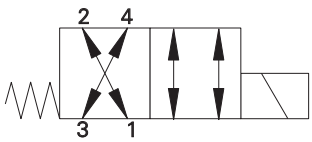

Model	Cavity	Flow rating	Typical pressure	Page
Solenoid 4/2, spool		**L/min (USgpm)**	**bar (psi)**	
SV17A/B-10-4	C-10-4	23 (6)	350 (5000)	A-184

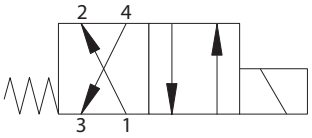

Model	Cavity	Flow rating	Typical pressure	Page
Solenoid 4/2, spool		**L/min (USgpm)**	**bar (psi)**	
SV7-10-4	C-10-4	17 (5)	210 (3000)	A-166
SV7A/B-12-4	C-12-4	46 (12)	210 (3000)	A-182
SV17A/B-12-4	C-12-4	46 (12)	350 (5000)	A-184

Solenoid valves

Valve locator

A

Functional symbol

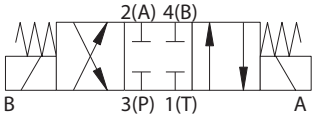

Model	Cavity	Flow rating	Typical pressure	Page
Solenoid 4/3, spool		**L/min (USgpm)**	**bar (psi)**	
SV9-8-E	C-8-4	13 (4)	210 (3000)	A-190
SV9-10-E	C-10-4	19(5)	210(3000)	A-194
SV9A-10-E	C-10-4	22 (5.8)	210 (3000)	A-198

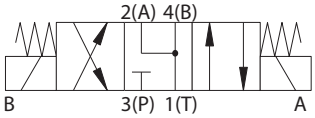

Model	Cavity	Flow rating	Typical pressure	Page
Solenoid 4/3, spool		**L/min (USgpm)**	**bar (psi)**	
SV9-8-F	C-8-4	13 (4)	210 (3000)	A-187
SV9-10-F	C-10-4	23 (6)	210 (3000)	A-195
SV9A-10-F	C-10-4	25 (6.5)	210 (3000)	A-199

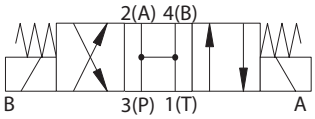

Model	Cavity	Flow rating	Typical Pressure	Page
Solenoid 4/3, spool		**L/min (USgpm)**	**bar (psi)**	
SV9-8-B	C-8-4	13.2 (3.5)	210 (3000)	A-188
SV9-10-B	C-10-4	23 (6)	210 (3000)	A-193
SV9A-10-B	C-10-4	34 (8.9)	210 (3000)	A-200

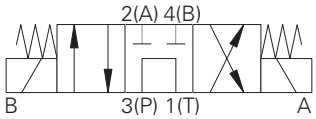

Model	Cavity	Flow rating	Typical pressure	Page
Solenoid 4/3, spool		**L/min (USgpm)**	**bar (psi)**	
SV9-8-A	C-8-4	11.0 (3.0)	210 (3000)	A-189
SV9-10-A	C-10-4	19 (5)	210 (3000)	A-192
SV9A-10-A	C-10-4	25 (6.5)	210 (3000)	A-201

Quality products and innovative solutions

This catalog gives basic specifications for the full line of Eaton's Integrated Hydraulics screw-in cartridge solenoid valves. Its purpose is to provide a quick, convenient reference tool when choosing Eaton's Integrated Hydraulics cartridge valves or designing a system using these components.

Two pressure ratings are shown for all products featured in this catalog - typical application pressure and fatigue pressure. The typical application pressure rating is the maximum recommended operating pressure for the valve in a given system.

The fatigue pressure rating is the pressure for the valve to be free for infinite life from metal fatigue.

Eaton's Integrated Hydraulics solenoid valves are offered with the widest choice of flow paths and position options to satisfy most requirements. These options include:

- 2-way, 2-position, normally open and normally closed spool and poppet valves
- 3-way, 2-position spool valves
- 4-way, 2-position spool valves
- 4-way, 3-position spool valves

Valve features and benefits

- Products in this catalog have been fatigue tested for one million cycles at 132% or 10 million cycles at 115% of rated pressure
- Rated flows up to 227 L/min (60 USgpm)
- Poppet and spool designs
- Standard cartridge cavities
- All operating parts are hardened steel, ground and honed for long life and low leakage
- Cartridge design for maximum flexibility and minimal manifold space requirements
- Optional low-cost manual override is available on selected models
- All exposed surfaces are zinc dichromate plated to resist corrosion
- All aluminum manifolds are gold anodized to resist corrosion
- Reliable, economical and compact
- Manual override options are available on all solenoid valves except SBV series valves

Note: Solenoid valve coil details are shown in section C.

Solenoid valves

Coils

Coil features and benefits

The solenoid operated directional valves in this catalog are offered with a choice of standard voltages and several types of electrical connections. For other coil ratings and connections, consult your Eaton representative.

Standard AC coils are internally rectified to supply them with DC current, therefore they have no "inrush" current value.

- Coils are rated for continuous duty
- Coils are interchangeable for serviceability
- Variety of voltages and terminations
- Coils offer a one-piece weather-proof encapsulated design, eliminating the need for extra seals
- AC voltage coils are internally full-wave rectified for 50 to 60 cycle (Hz) applications

An arc suppression diode molded into the coil is available as a standard option on DC coils. Also available, are explosion-proof coils and cartridges that are CSA approved and recognized by the US Underwriters Laboratories.

Protection of internally rectified coils

The rectifiers used in these coils may require protection from high voltage surges in some electrical circuits containing highly inductive or capacitive components, These include certain types of motors, solenoids, relays, and transformers.

Protection is simple and inexpensive. It consists of installing a commercially available voltage surge suppressor like the General Electric MOV varistor V130LA20A for 115 volts AC or the V250LA20A for 230 volts AC, across the AC line supplying the rectified components. A single suppressor will normally protect all of the rectified components in the circuit, as shown in the surge suppressor circuit diagram below.

Surge suppressor circuit diagram

Note: Solenoid valve coil details are shown in section C.

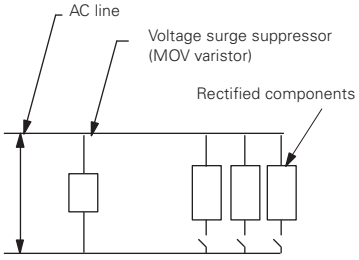

All voltage surge producing components must be installed on this side of suppressor.

Switches on relay contacts only. Relay coils must be connected on the line side of the surge suppressor.

No inductive or capacitive loads can be installed between the surge suppressor and rectified valves without additional precautions.

⚠ Caution

Coils may be hot to touch if used in continuous applications.

⚠ Warning

Maintain in 5-8 Nm (4-6 ft lbs) maximum torque on valve tube nut. Overtightening may cause valve or coil failure.

⚠ Warning

Application of these products beyond published performance specifications may cause valve malfunction which may result in personal injury and/or damage to the machine.

Don't Let Abrasion Stop You From Getting The Job Done.

Get Added Protection with Weatherhead® Spring Guard And Abrasion Sleeve From Eaton®

FPO

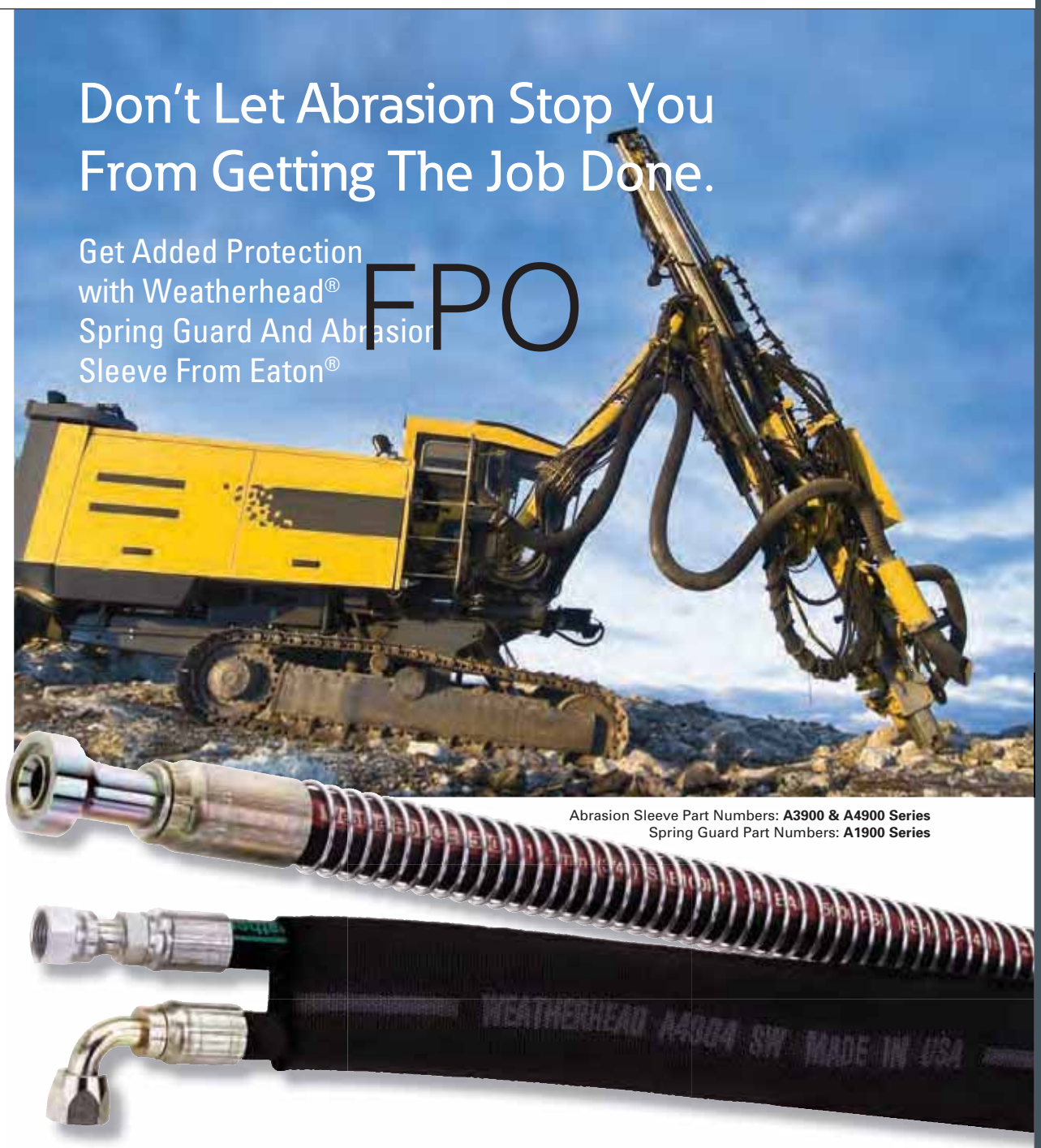

Abrasion Sleeve Part Numbers: **A3900 & A4900 Series**
Spring Guard Part Numbers: **A1900 Series**

EATON
Powering Business Worldwide

Spring Guard and Abrasion Sleeve Details

Features and Benefits

- Heavy duty defense against cuts and abrasion
- Sleeve can also be used to bundle two or more hose assemblies for protection and clean routing
- Guard helps prevent kinks and crushing of hose assemblies
- Prevents accidental damage and prolongs hose assembly life

Additional Information

For additional part number information please see the "Hose Sleeves and Guards" portion of the "Accessory" section of the Weatherhead® Hose Assembly Master Catalog, or contact your local Heavy Duty District Sales Manager today.

SV5-8-C/CM - Solenoid valve

Poppet type, normally closed solenoid valve
23 L/min (6 USgpm) • 210 bar (3000 psi)

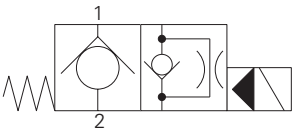

Operation

In the de-energized position the valve blocks flow from port 2 to 1 and free flow is allowed from port 1 to 2.

When the solenoid is energized the pilot poppet is pulled off the seat allowing the valve to open from port 2 to 1. in the reverse direction the flow is restricted by the pilot orifice.

Features

Hardened and ground working parts. Lapped seat for low leakage. IP69K Tough coil compatibility. Continuously rated. Compact design with low pressure drop.

Sectional view

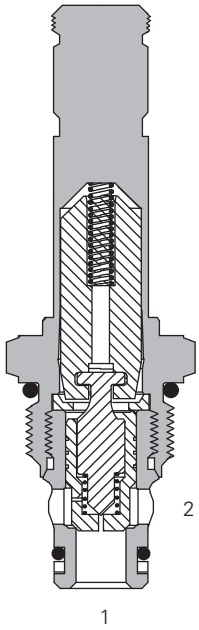

Performance data

Ratings and specifications

Performance data is typical with fluid at 21,8 cST (105 SUS) and 49°C (120°F)	
Typical application pressure (all ports)	210 bar (3000 psi)
Cartridge fatigue pressure (infinite life)	210 bar (3000 psi)
Rated flow	23 L/min (6 USgpm)
Internal leakage	less than 5 drops/min @ 210 bar (3000 psi)
Coil duty	Continuous from 85% to 110% of nominal voltage
Response times (100% rated voltage and flow)	Energize: 18 ms De-Energize: 46 ms
Temperature range	-40° to 120°C (-40° to 248°F)
Cavity	C-8-2
Fluids	All general purpose hydraulic fluids such as: MIL-H-5606, SAE 10, SAE 20 etc.
Filtration	Cleanliness code 18/**16/13**
Housing material (standard)	Aluminum
Weight including coil	0,28 kg (0.62 lbs)
Seal kit	02-165875 (Buna-N), 02-165877 (Viton®)

Viton is a registered trademark of E.I. DuPont

Description

This is a 2-way, 2-position, poppet type, pilot operated, normally closed solenoid valve. This valve is used in applications requiring low leakage, such as load holding applications or as a general purpose diverter or dump valve.

Pressure drop

Cartridge only

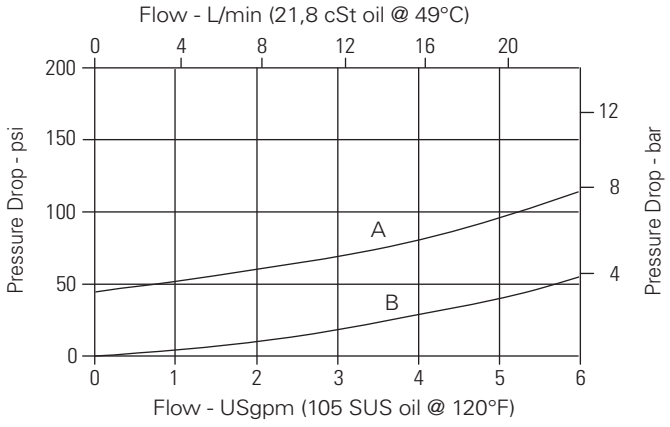

A - Port 1 to port 2 de-energized
B - Port 2 to port 1 energized

Where measurements are critical request certified drawings. We reserve the right to change specifications without notice.

SV5-8-C/CM - Solenoid valve

Poppet type, normally closed solenoid valve
23 L/min (6 USgpm) • 210 bar (3000 psi)

Model code

SV5	–	8	– (V)	C	– (M)	(F)	– (A)	**	– ****	*	S	– 00
1		2	3	4	5	6	7	8	9	10	11	12

1 Function
SV5 - Solenoid valve

2 Size
8 - 8 size

3 Seal material
Blank - Buna-N
V - Viton®

4 Style
C - Normally closed

5 Manual override option
Blank - No manual override
M - Knob type

For valve dimensions with manual override option installed see page A-980.

6 Filter option
Blank - None
F - Filter screen

7 Valve housing material
Omit for cartridge only
A - Aluminum

8 Port size

Code	Port size	Housing number
0	Cartridge only	
2G	1/4" BSPP	02-160727
3G	3/8" BSPP	02-160728
4T	SAE 4	02-160730
6T	SAE 6	02-160731
8T	SAE 8	02-160732

See section J for housing details.

9 Voltage rating
00 - No coil
12D - 12VDC
24D - 24VDC
36D - 36VDC
24 A - 24VAC
115A - 115VAC
230A - 230VAC
12B - 12VDC/w diode*
24B - 24VDC/w diode*
*Optional arc suppression diode.

10 Connector types
Blank - No coil
G - ISO 4400 DIN 43650
Q - Spade terminals
W - Flying lead
N - Deutsch (DC only)
Y - Amp JR (DC only)
D - Metripack 150 male (DC only)
J - Metripack 280 male (DC only)

11 Coil series
S - 8 series, 20 W

For coil part numbers and dimensions see section C.

12 Special features
00 - None

(Only required if valve has special features, omitted if "00".)

Dimensions
mm (inch)

Torque cartridge in aluminum housing 34-41 Nm (25-30 ft lbs)

Note: When solenoid valve is ordered as cartridge only, coil nut is included.

Cartridge only

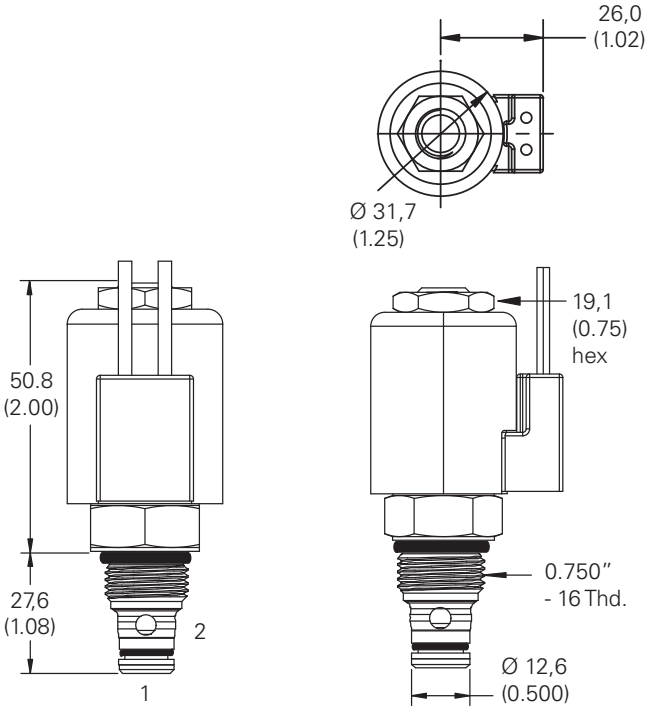

Installation drawing

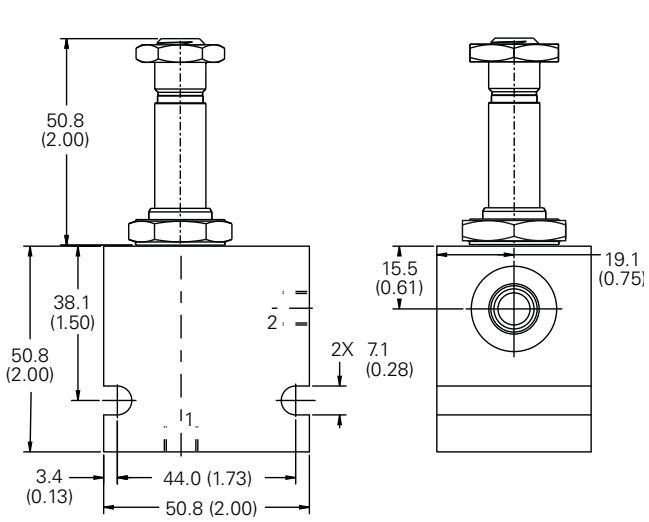

⚠ Warning

Maintain 5-8 Nm (4-6 ft lbs) maximum torque on valve tube nut.

Over tightening may cause valve failure.

Where measurements are critical request certified drawings. We reserve the right to change specifications without notice.

SV15-8-C/CM - Solenoid valve

Poppet type, normally closed solenoid valve
37 L/min (10 USgpm) • 350 bar (5000 psi)

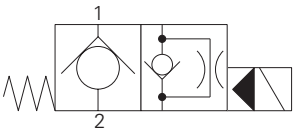

Operation

In the de-energized position the valve blocks flow from port 2 to 1 and free flow is allowed from port 1 to 2.

When the solenoid is energized the pilot poppet is pulled off the seat allowing the valve to open from port 2 to 1. in the reverse direction the flow is restricted by the pilot orifice.

Features

Hardened and ground working parts. Lapped seat for low leakage. IP69K Tough coil compatibility. Continuously rated. Compact design with low pressure drop. 350 bar working pressure.

Sectional view

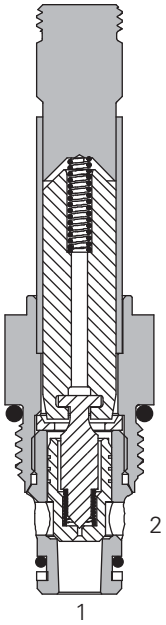

Performance data

Ratings and specifications

Performance data is typical with fluid at 21,8 cST (105 SUS) and 49°C (120°F)	
Typical application pressure (all ports)	350 bar (5000 psi)
Cartridge fatigue pressure (infinite life)	310 bar (4500 psi)
Rated flow	37 L/min (10 USgpm)
Internal leakage, port 2 to port 1	5 drops/min, max @ 210 bar (3000 psi)
Temperature range	-40° to 100°C (-40° to 212°F)
Coil duty	Continuous from 85% to 110% of nominal voltage
Cavity	C-8-2
Fluids	All general purpose hydraulic fluids such as: MIL-H-5606, SAE 10, SAE 20 etc.
Filtration	Cleanliness code 18/**16/13**
Housing material (standard)	Steel
Weight cartridge only	0,11 kg (0.25 lbs)
Seal kit	02-165875 (Buna-N), 02-165877 (Viton®)

Viton is a registered trademark of E.I. DuPont

Description

This is a 2-way, 2-position, poppet type, high pressure, pilot operated, normally closed solenoid valve. This valve is used in applications requiring low leakage, such as load holding applications or as a general purpose diverter or dump valve.

Pressure drop

Cartridge only

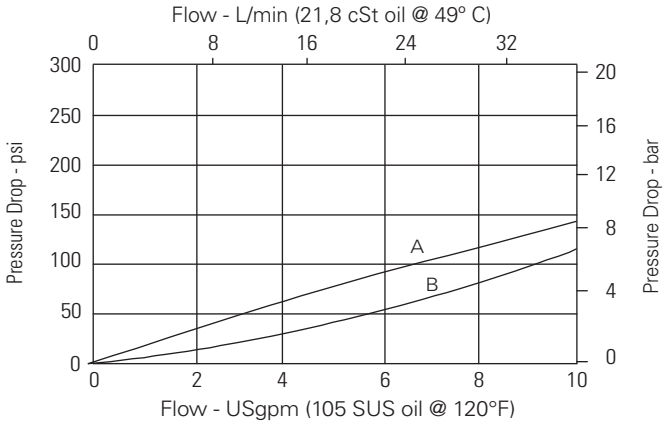

A - Port 1 to port 2
B - Port 2 to port 1

Where measurements are critical request certified drawings. We reserve the right to change specifications without notice.

SV15-8-C/CM - Solenoid valves

Poppet type, normally closed solenoid valve
37 L/min (10 USgpm) • 350 bar (5000 psi)

Model code

SV15	–	8	(V)	–	C	(M)	–	(S)	**	****	*	P	–	00
1		2	3		4	5		6	7	8	9	10		11

1 Function
SV15 - Solenoid valve

2 Size
8 - 8 size

3 Seal material
Blank - Buna-N
V - Viton®

4 Style
C - Normally closed

5 Manual override option
Blank - No manual override
M - Manual override

For valve dimensions with manual override option installed see page A-980.

6 Valve housing material
Blank - Cartridge only
S - Steel

7 Port size

Code	Port size	Housing number
0	Cartridge only	
2G	1/4" BSPP	02-160733
3G	3/8" BSPP	02-160734
4T	SAE 4	02-160736
6T	SAE 6	02-160737
8T	SAE 8	02-160738

See section J for housing details.

8 Voltage rating
00 - No coil
12D - 12VDC
24D - 24VDC
36D - 36VDC
24A - 24VAC
115A - 115VAC
230A - 230VAC
12B - 12VDC/w diode*
24B - 24VDC/w diode*

*Optional arc suppression diode.

9 Connector types
Blank - No coil
G - ISO 4400 DIN 43650
Q - Spade terminals
W - Flying lead
N - Deutsch (DC only)
Y - Amp JR (DC only)
D - Metripack 150 male (DC only)
J - Metripack 280 male (DC only)

10 Coil series
P - 8 series, 23 W

For coil part numbers and dimensions see section C.

11 Special features
00 - None
(Only required if valve has special features omitted if "00.")

Dimensions
mm (inch)

Cartridge only

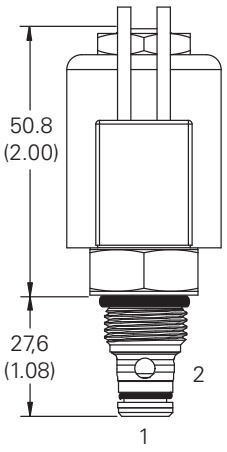

Torque cartridge in aluminum or steel housing 34-41 Nm (25-30 ft lbs)

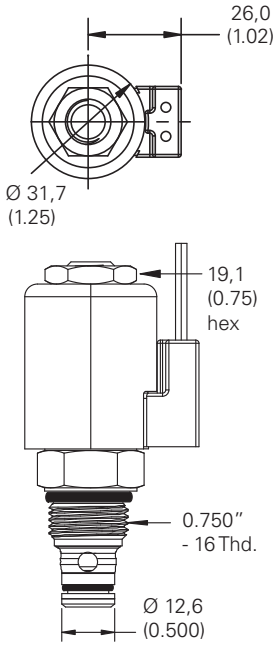

Note: When solenoid valve is ordered as cartridge only, coil nut is included.

Installation drawing

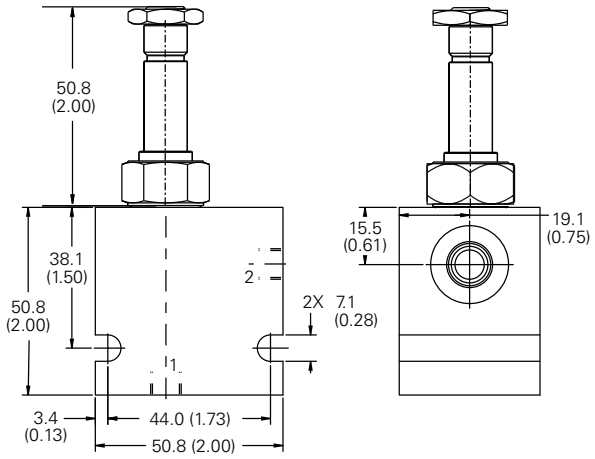

⚠ Warning
Maintain 5-8 Nm (4-6 ft lbs) maximum torque on valve tube nut.
Over tightening may cause valve failure.

Where measurements are critical request certified drawings. We reserve the right to change specifications without notice.

SBV2-8-C - Solenoid Bi-directional valve

Bi-directional, normally closed solenoid valve (low flow version)
1 L/min (0.25 USgpm) • 210 bar (3000 psi)

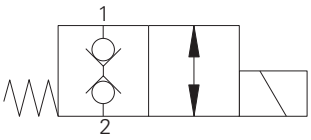

Operation

In the de-energized position the valve is blocked in both directions.

When the solenoid is energized the poppet is released from the seat allowing flow in both directions.

Features

Hardened and ground working parts. IP69K Tough coil compatibility. Continuously rated. Compact design with low pressure drop.

Sectional view

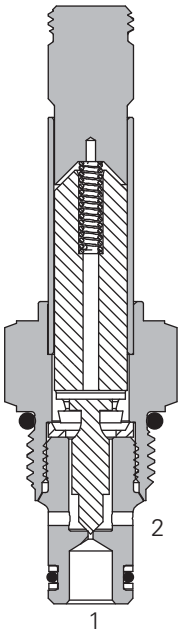

Performance data

Ratings and specifications

Performance data is typical with fluid at 21,8 cST (105 SUS) and 49°C (120°F)	
Typical application pressure (all ports)	210 bar (3000 psi)
Cartridge fatigue pressure (infinite life)	210 bar (3000 psi)
Rated flow	1 L/min (0.25 USgpm)
Internal leakage, port 1 to port 2 and port 2 to port 1	5 drops/min, max @ 350 bar (5000 psi)
Temperature range	-40° to 100°C (-40° to 212°F)
Coil duty	Continuous from 85% to 110% of nominal voltage
Cavity	C-8-2
Fluids	All general purpose hydraulic fluids such as: MIL-H-5606, SAE 10, SAE 20 etc.
Filtration	Cleanliness code 18/**16/13**
Housing material (standard)	Aluminum or steel
Weight cartridge only	0,120 kg (0.26 lbs)
Seal kit	02-160777 (Buna-N), 02-160778 (Viton®)

Viton is a registered trademark of E.I. DuPont

Description

This is a 2-way 2-position, low flow, high pressure bi-directional, normally closed poppet type screw in cartridge valve. The valve is ideal for isolating and holding actuators in position or blocking pilot lines.

Pressure drop

Cartridge only

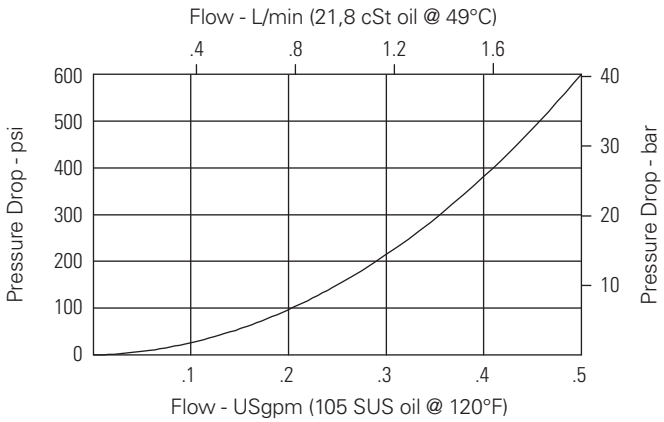

Where measurements are critical request certified drawings. We reserve the right to change specifications without notice.

SBV2-8-C - Solenoid Bi-directional valve

Bi-directional, normally closed solenoid valve (low flow version)
1 L/min (0.25 USgpm) • 210 bar (3000 psi)

Model code

SBV2	–	8	(*)	–	C	(*)	**	–	****	*	P	–	00
1		2	3		4	5	6		7	8	9		10

1 Function
SBV2 - Solenoid valve

2 Size
8 - 8 size

3 Seal material
Blank - Buna-N
V - Viton®

4 Style
C - Normally closed

5 Valve housing material
Blank - Cartridge only
A - Aluminum
S - Steel

6 Port size

Code	Port size	Housing number	
		Aluminium	Steel
0	Cartridge only		
2G	1/4" BSPP	02-160727	02-160733
3G	3/8" BSPP	02-160728	02-160734
4T	SAE 4	02-160730	02-160736
6T	SAE 6	02-160731	02-160737
8T	SAE 8	02-160732	02-160738

See section J for housing details.

7 Voltage rating
00 - No coil
12D - 12VDC
24D - 24VDC
36D - 36VDC
24A - 24VAC
115A - 115VAC
230A - 230VAC
12B - 12VDC/w diode*
24B - 24VDC/w diode*
*Optional arc suppression diode.

8 Connector types
Blank - No coil
G - ISO 4400 DIN 43650
Q - Spade terminals
W - Flying lead
N - Deutsch (DC only)
Y - Amp JR (DC only)
D - Metripack 150 male (DC only)
J - Metripack 280 male (DC only)

9 Coil series
P - 8 series, 23 W
For coil part numbers and dimensions see section C.

10 Special features
00 - None
(Only required if valve has special features omitted if "00".)

Note: When solenoid valve is ordered as cartridge only, coil nut is included.

Dimensions
mm (inch)

Torque cartridge in aluminum or steel housing 34-41 Nm (25-30 ft lbs).

Cartridge only

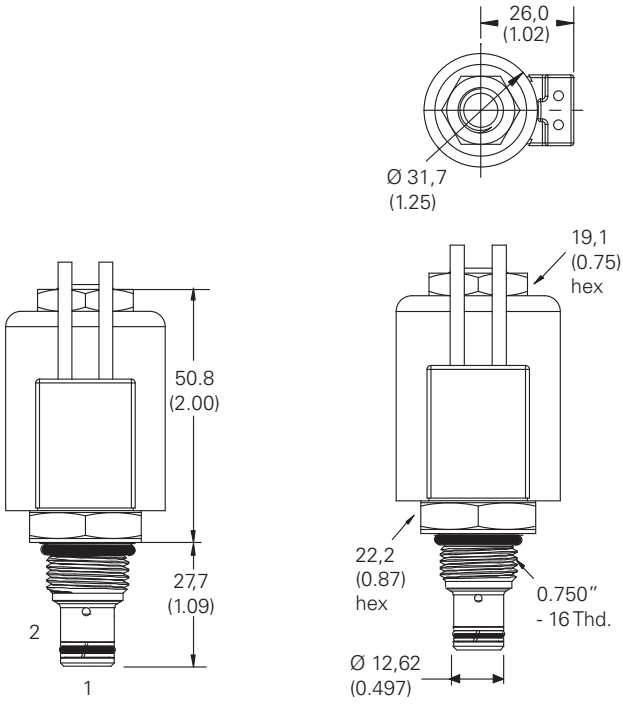

Installation drawing (Aluminum)

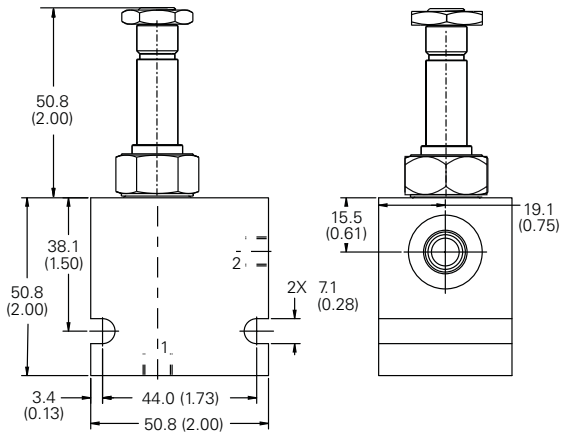

⚠ Warning
Maintain 5-8 Nm (4-6 ft lbs) maximum torque on valve tube nut.

Over tightening may cause valve failure.

⚠ Warning
Aluminum housings can be used for pressures up to 210 bar (3000 psi). Steel housings **must** be used for operating pressures **above** 210 bar (3000 psi).

Where measurements are critical request certified drawings. We reserve the right to change specifications without notice.

SBV12-8-C/CM - Solenoid Bi-directional valve

Bi-directional, normally closed solenoid valve (low flow version)
1 L/min (0.25 USgpm) • 350 bar (5000 psi)

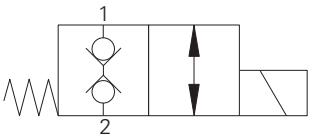

Operation

In the de-energized position the valve is blocked in both directions.

When the solenoid is energized the poppet is released from the seat allowing flow in both directions.

Features

Hardened and ground working parts. IP69K Tough coil compatibility. Continuously rated. Compact design with low pressure drop. 350bar working pressure.

Sectional view

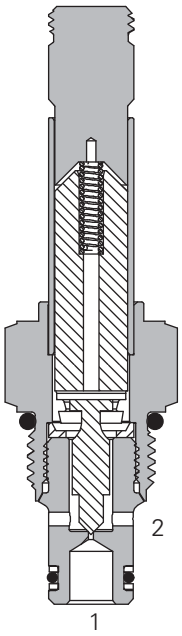

Performance data

Ratings and specifications

Performance data is typical with fluid at 21,8 cST (105 SUS) and 49°C (120°F)	
Typical application pressure (all ports)	350 bar (5000 psi)
Cartridge fatigue pressure (infinite life)	310 bar (4500 psi)
Rated flow	1 L/min (0.25 USgpm)
Internal leakage, port 1 to port 2 and port 2 to port 1	5 drops/min, max @ 350 bar (5000 psi)
Temperature range	-40° to 100°C (-40° to 212°F)
Coil duty	Continuous from 85% to 110% of nominal voltage
Cavity	C-8-2
Fluids	All general purpose hydraulic fluids such as: MIL-H-5606, SAE 10, SAE 20 etc.
Filtration	Cleanliness code 18/**16/13**
Housing material (standard)	Aluminum or steel
Weight cartridge only	0,120 kg (0.26 lbs)
Seal kit	02-160777 (Buna-N), 02-160778 (Viton®)

Viton is a registered trademark of E.I. DuPont

Description

This is a 2-way 2-position, low flow, high pressure bi-directional, normally closed poppet type screw in cartridge valve. The valve is ideal for isolating and holding actuators in position or blocking pilot lines.

Pressure drop

Cartridge only

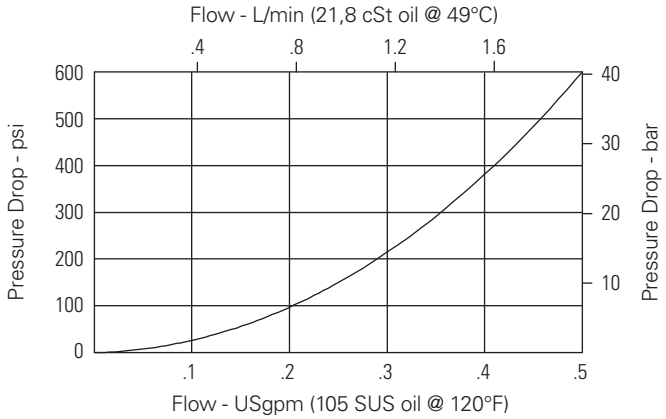

Where measurements are critical request certified drawings. We reserve the right to change specifications without notice.

SBV12-8-C/CM - Solenoid Bi-directional valve

Bi-directional, normally closed solenoid valve (low flow version)
1 L/min (0.25 USgpm) • 350 bar (5000 psi)

Model code

SBV12	–	8	(V)	–	C	(*)	–	(*)	**	–	****	*	P	–	00
1		2	3		4	5		6	7		8	9	10		11

1 Function
SBV12 - Solenoid valve

2 Size
8 - 8 size

3 Seal material
Blank - Buna-N
V - Viton®

4 Style
C - Normally closed

5 Manual override option
Blank - No manual override
M - Manual override

For valve dimensions with manual override option installed see page A-980.

6 Valve housing material
Blank - Cartridge only
A - Aluminum
S - Steel

7 Port size

Code	Port size	Housing number	
		Aluminium	Steel
0	Cartridge only		
2G	1/4" BSPP	02-160727	02-160733
3G	3/8" BSPP	02-160728	02-160734
4T	SAE 4	02-160730	02-160736
6T	SAE 6	02-160731	02-160737
8T	SAE 8	02-160732	02-160738

See section J for housing details.

8 Voltage rating
00 - No coil
12D - 12VDC
24D - 24VDC
36D - 36VDC
24A - 24VAC
115A - 115VAC
230A - 230VAC
12B - 12VDC/w diode*
24B - 24VDC/w diode*

*Optional arc suppression diode.

9 Connector types
Blank - No coil
G - ISO 4400 DIN 43650
Q - Spade terminals
W - Flying lead
N - Deutsch (DC only)
Y - Amp JR (DC only)
D - Metripack 150 male (DC only)
J - Metripack 280 male (DC only)

10 Coil series
P - 8 series, 23 W

For coil part numbers and dimensions see section C.

11 Special features
00 - None

(Only required if valve has special features omitted if "00.")

Dimensions
mm (inch)

Cartridge only

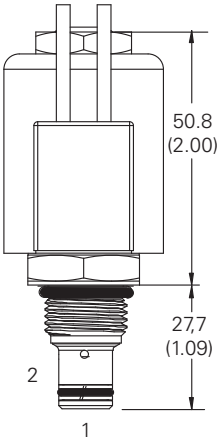

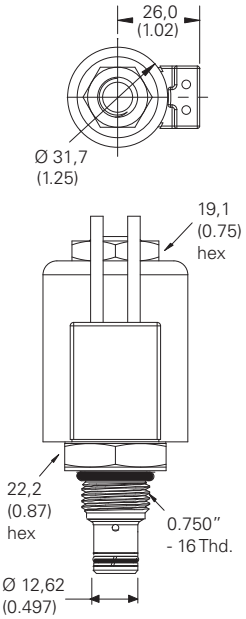

Torque cartridge in aluminum or steel housing 34-41 Nm (25-30 ft lbs).

Installation drawing (Steel)

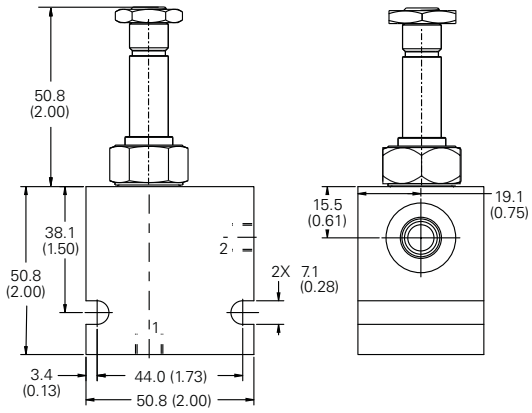

⚠ Warning
Maintain 5-8 Nm (4-6 ft lbs) maximum torque on valve tube nut.

Over tightening may cause valve failure.

Note: When solenoid valve is ordered as cartridge only, coil nut is included.

⚠ Warning
Aluminum housings can be used for pressures up to 210 bar (3000 psi). Steel housings **must** be used for operating pressures **above** 210 bar (3000 psi).

Where measurements are critical request certified drawings. We reserve the right to change specifications without notice.

S217A - Directional control valve

Bi-directional, normally closed poppet solenoid valve
Up to 10 L/min (2.6 USgpm) • Up to 210 bar (3000 psi)

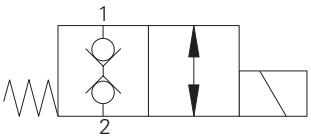

Operation

In the de-energized position the valve is blocked in both directions. When the solenoid is energized the poppet is pushed off the seat allowing flow in both directions.

Features

- Very low leakage poppet design.
- Standard valve bodies and common cavities.
- One-piece encapsulated coil with minimal amperage draw.
- Oil immersed armature solenoid.
- Various coil terminals and voltages.
- Coil interchangeability with valves of same series.
- Manual override, seal variations and other options available.
- Sealed coil arrangement to protect stem from corrosion.

Sectional view

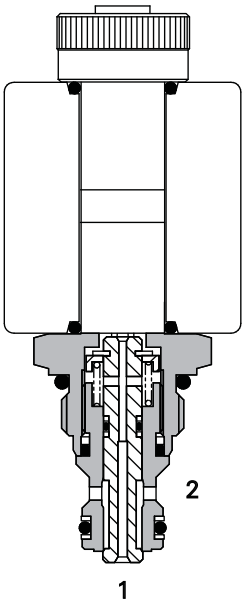

Description

This is a direct acting, electrically operated 2 way 2 position normally closed poppet style screw in cartridge valve. Ideal for load holding and load lowering applications.

Performance data

Ratings and specifications

Performance data is typical with fluid at Viscosity 32 cST (150 SSU)	
Typical application pressure	210 bar (3000 psi)
Rated flow	Up to 10 L/min (2.6 USgpm)
Nominal flow	10 L/min (2.6 USgpm)
Internal leakage	Less than 0.6 ml/min (10 dpm) 210 bar differential at 32 cSt
Temperature range	-30° to +120°C (-22° to +248°F)
Cavity	A879 (see Section M)
Electrical data	See coil data sheet
Torque cartridge into cavity	20 Nm (15 lbs ft)
Mounting position	Unrestricted
Fluids	All general purpose hydraulics fluids such as: MIL-H-5606, SAE 10, SAE 20 etc
Seal material	Standard nitrile with PTFE back up rings
Filtration	BS5540/4 Class 18/13 (25 micron or better)
Nominal viscosity range	15 to 250 cSt
Standard housing materials	Aluminium alloy
Coil weight	0.2 kg (0.4 lbs)
Cartridge weight	0.2 kg (0.4 lbs)
Seal kit	SK1043 (Nitrile) SK1043V (Viton)
Coil part number	C13-*-*/27
Coil voltage available	12, 24 VDC. 110, 220, VAC*

Viton is a registered trademark of E.I. DuPont
*AC coils must be used with a rectifying connector

Pressure drop

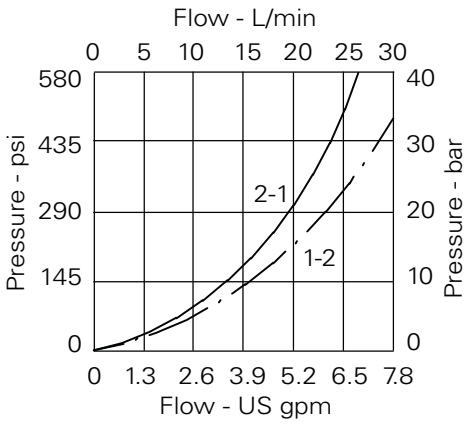

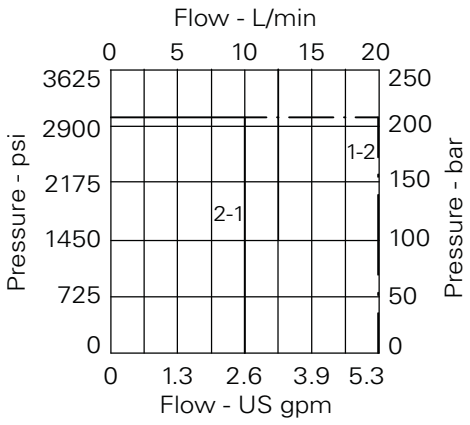

Where measurements are critical request certified drawings. We reserve the right to change specifications without notice.

S217A - Directional control valve

Bi-directional, normally closed poppet solenoid valve
Up to 10 L/min (2.6 USgpm) • Up to 210 bar (3000 psi)

Model code

S217A N * – 24 H – 3W

1 2 3 4 5 6

1 Function
S217A - Normally open

2 Seal material
N - Nitrile
V - Viton®

3 Manual Override
2 - Screw
3 - Push
(Consult factory for availability)
See page A-980.

4 Voltage
12 - 12 VDC
24 - 24 VDC
110 - 110 VAC
220 - 220 VAC

5 Coil Termination
H - ISO 4400 DIN 43650
F - Flying lead
DM - Deutsch moulded
Other terminations available on request.

6 Port sizes

Code	Port size	Housing number	
		Aluminium	Steel
2W	1/4" BSP	A1485	
3W	3/8" BSP	A1043	A14175
6T	3/8" SAE	A15676	A14843

Dimensions
mm (inch)

Cartridge only
Basic code
S217

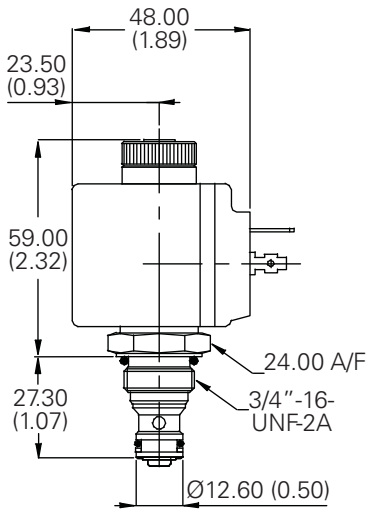

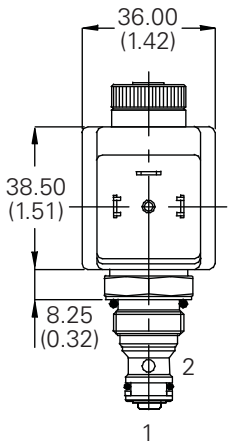

Installation drawing

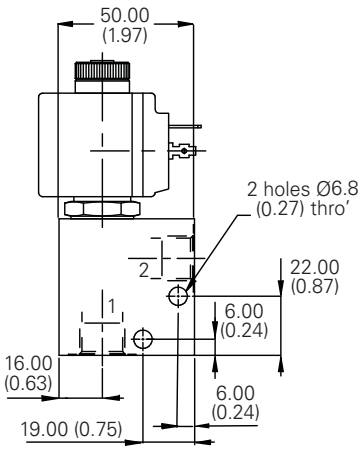

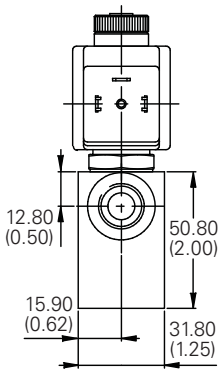

Where measurements are critical request certified drawings. We reserve the right to change specifications without notice.

S519 - Directional control valve

Bi-directional, normally closed poppet solenoid valve
Up to 12 L/min (3 USgpm) • Up to 210 bar (3000 psi)

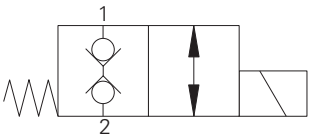

Operation

In the de-energized position the valve is blocked in both directions. When the solenoid is energized the poppet is pushed off the seat allowing flow in both directions.

Features

- Very low leakage poppet design.
- Standard valve bodies and common cavities.
- One-piece encapsulated coil with minimal amperage draw.
- Oil immersed armature solenoid.
- Various coil terminals and voltages.
- Coil interchangeability with valves of same series.
- Manual override, seal variations and other options available.
- Sealed coil arrangement to protect stem from corrosion.

Sectional view

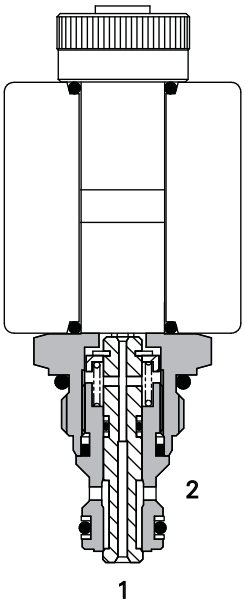

Description

This is a direct acting, electrically operated 2 way 2 position normally closed poppet style screw in cartridge valve. Ideal for load holding and load lowering applications.

Performance data

Ratings and specifications

Performance data is typical with fluid at Viscosity 32 cST (150 SSU)	
Typical application pressure	210 bar (3000 psi)
Rated flow	Up to 11 L/Min
Nominal flow	10 L/min (3 USgpm)
Internal leakage	Less than 0.6 ml/min (10 dpm) 210 bar differential at 32 cSt
Temperature range	-30° to +120°C (-22° to +248°F)
Cavity	AXP12370 (see Section M)
Electrical data	See coil data sheet
Torque cartridge into cavity	20 Nm (15 lbs ft)
Mounting position	Unrestricted
Fluids	All general purpose hydraulics fluids such as: MIL-H-5606, SAE 10, SAE 20 etc
Seal material	Standard nitrile with PTFE back up rings
Filtration	BS5540/4 Class 18/13 (25 micron or better)
Nominal viscosity range	15 to 250 cSt
Standard housing materials	Aluminum , Steel
Coil weight	0.2 kg (0.4 lbs)
Cartridge weight	0.2 kg (0.4 lbs)
Seal kit	SK1138 (Nitrile) SK1138V (Viton)
Coil part number	C16*-*/19
Coil voltage available	12, 24 VDC. 110, 230, VAC*

Viton is a registered trademark of E.I. DuPont
*AC coils must be used with a rectifying connector

Pressure drop

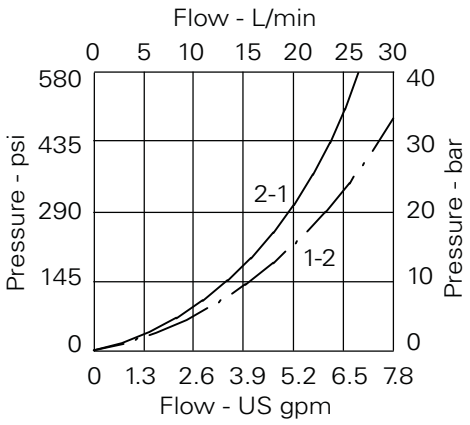

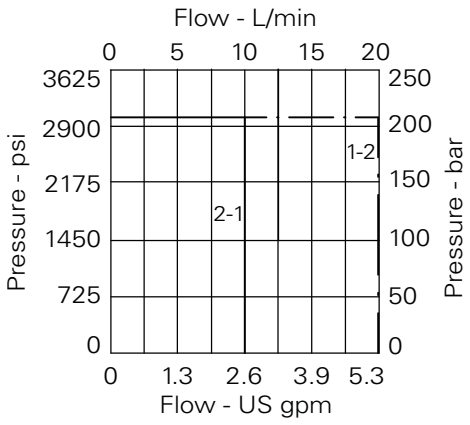

Where measurements are critical request certified drawings. We reserve the right to change specifications without notice.

S519 - Directional control valve

Bi-directional, normally closed poppet solenoid valve
Up to 12 L/min (3 USgpm) • Up to 210 bar (3000 psi)

Model code

S519	N	3	–	H	24	–	3W
1	2	3		4	5		6

1 Function
S519 - Normally closed

2 Seal material
N - Nitrile
V - Viton®

3 Manual override
Bank - No Manual Override
3 - Push
(Consult factory for availability)
See page A-980.

4 Voltage
12 - 12 VDC
24 - 24 VDC
110 - 110 VAC
230 - 230 VAC

5 Coil termination
H - ISO 4400 DIN 43650
F - Flying lead
A - Junior AMP
DM - Deutsch moulded

Other terminations available on request.

6 Port sizes

Code	Port size	Housing number	
		Aluminium	Steel
3W	8" BSP	BXP19053	BXP20598
4W	2" BSP	BXP19356	BXP20599
6T	3/8" SAE	BXP19401	BXP20601
8T	2" SAE	BXP19402	BXP20601

Dimensions
mm (inch)

Cartridge only
Basic code
S217

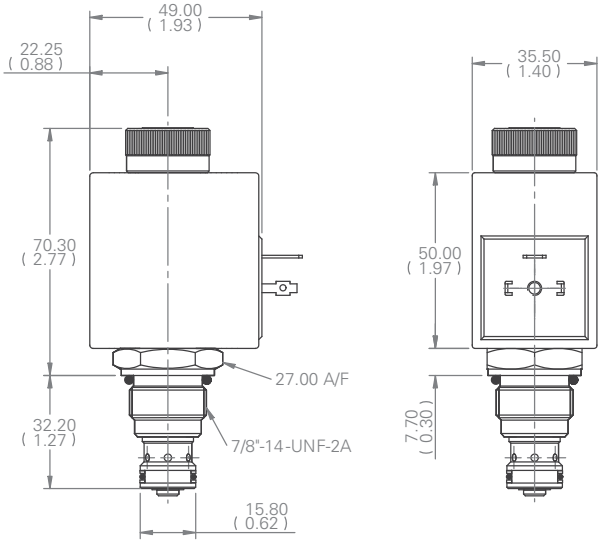

Installation drawing

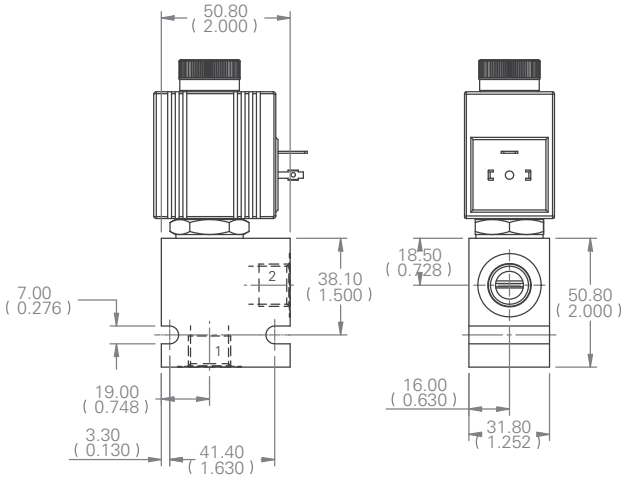

Where measurements are critical request certified drawings. We reserve the right to change specifications without notice.

SBV11-8-C/CM - Solenoid Bi-directional valve

Bi-directional, normally closed solenoid valve
60 L/min (15 USgpm) • 350 bar (5000 psi)

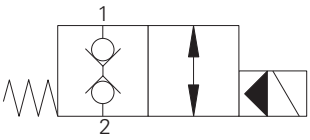

Operation

In the de-energized position the valve is blocked in both directions. When the solenoid is energized the pilot poppet is released from the seat allowing the main poppet to open.

A series of internal check valves allows full flow in both directions.

Features

Hardened and ground working parts. Lapped seat for low leakage. IP69K Tough coil compatibility. Continuously rated. Compact design with low pressure drop. 350 bar working pressure.

Sectional view

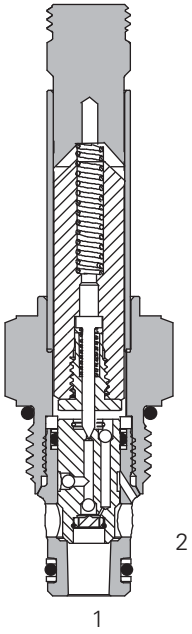

Performance data

Ratings and specifications

Performance data is typical with fluid at 21,8 cST (105 SUS) and 49°C (120°F)	
Typical application pressure (all ports)	350 bar (5000 psi)
Cartridge fatigue pressure (infinite life)	310 bar (4500 psi)
Rated flow	60 L/min (15 USgpm)
Internal leakage, port 1 to port 2 & port 2 to port 1	5 drops/min, max @ 350 bar (5000 psi)
Temperature range	-40° to 100°C (-40° to 212°F)
Coil duty	Continuous from 85% to 110% of nominal voltage
Cavity	C-8-2
Fluids	All general purpose hydraulic fluids such as: MIL-H-5606, SAE 10, SAE 20 etc.
Filtration	Cleanliness code 18/**16/13**
Housing material (standard)	Aluminum or steel
Weight cartridge only	0,12 kg (0.26 lbs)
Seal kit	02-160777 (Buna-N), 02-160778 (Viton®)

Viton is a registered trademark of E.I. DuPont

Description

This is a 2-way 2-position, high pressure bi-directional, pilot operated, normally closed poppet type screw in cartridge valve. The valve is ideal for isolating and holding actuators in position.

Pressure drop

Cartridge only

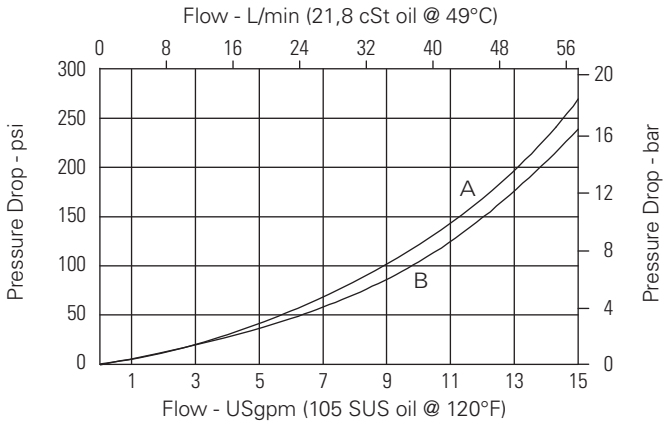

A - Port 1 to port 2
B - Port 2 to port 1

Where measurements are critical request certified drawings. We reserve the right to change specifications without notice.

SBV11-8-C/CM - Solenoid Bi-directional valve

Bi-directional, normally closed solenoid valve
60 L/min (15 USgpm) • 350 bar (5000 psi)

Model code

SBV11	–	8	(V)	–	C	(*)	–	(*)	**	–	****	*	P	–	00
1		2	3		4	5		6	7		8	9	10		11

1 Function
SBV11 - Solenoid valve

2 Size
8 - 8 size

3 Seal material
Blank - Buna-N
V - Viton®

4 Style
C - Normally closed

5 Manual override option
Blank - No manual override
M - Manual override

For valve dimensions with manual override option installed see page A-980.

6 Valve housing material
Blank - Cartridge only
A - Aluminum
S - Steel

7 Port size

Code	Port size	Housing number	
		Aluminium	Steel
0	Cartridge only		
2G	1/4" BSPP	02-160727	02-160733
3G	3/8" BSPP	02-160728	02-160734
4T	SAE 4	02-160730	02-160736
6T	SAE 6	02-160731	02-160737
8T	SAE 8	02-160732	02-160738

See section J for housing details.

8 Voltage rating
00 - No coil
12D - 12VDC
24D - 24VDC
36D - 36VDC
24A - 24VAC
115A - 115VAC
230A - 230VAC
12B - 12VDC/w diode*
24B - 24VDC/w diode*
*Optional arc suppression diode.

9 Connector types
Blank - No coil
G - ISO 4400 DIN 43650
Q - Spade terminals
W - Flying lead
N - Deutsch (DC only)
Y - Amp JR (DC only)
D - Metripack 150 male (DC only)
J - Metripack 280 male (DC only)

10 Coil series
P - 8 series, 23 W

For coil part numbers and dimensions see section C.

11 Special features
00 - None

(Only required if valve has special features omitted if "00.")

Dimensions
mm (inch)

Cartridge only

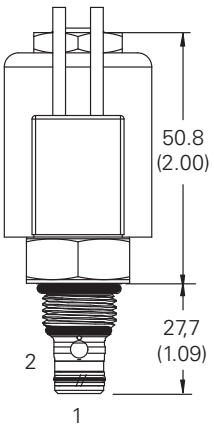

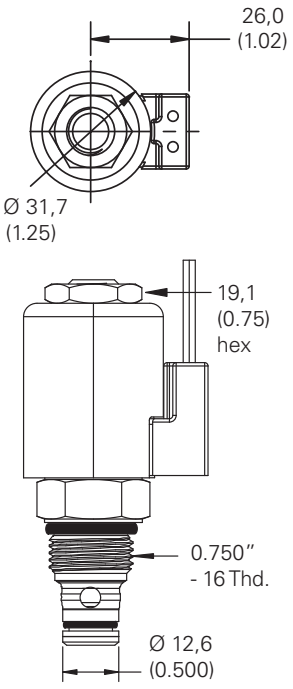

Torque cartridge in aluminum or steel housing 34-41 Nm (25-30 ft lbs)

Installation drawing (Steel)

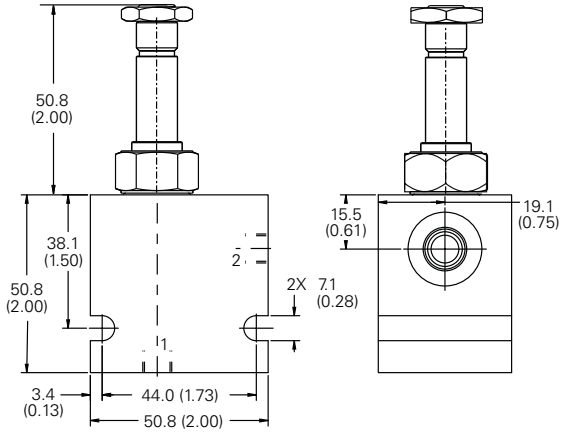

Note: When solenoid valve is ordered as cartridge only, coil nut is included.

⚠ Warning
Maintain 5-8 Nm (4-6 ft lbs) maximum torque on valve tube nut.

Over tightening may cause valve failure.

⚠ Warning
Aluminum housings can be used for pressures up to 210 bar (3000 psi). Steel housings **must** be used for operating pressures **above** 210 bar (3000 psi).

Where measurements are critical request certified drawings. We reserve the right to change specifications without notice.

SV1-10-C/CM/CR - Solenoid valve

Poppet type, normally closed solenoid valve
45 L/min (12 USgpm) • 210 bar (3000 psi)

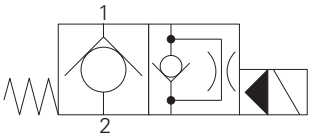

Operation

In the de-energized position the valve blocks flow from port 2 to 1 and free flow is allowed from port 1 to 2.

When the solenoid is energized the pilot poppet is pulled off the seat allowing the valve to open from port 2 to 1. in the reverse direction the flow is restricted by the pilot orifice.

Features

Hardened and ground working parts. Lapped seat for low leakage. IP69K Tough coil compatibility. Continuously rated. Compact design with low pressure drop.

Sectional view

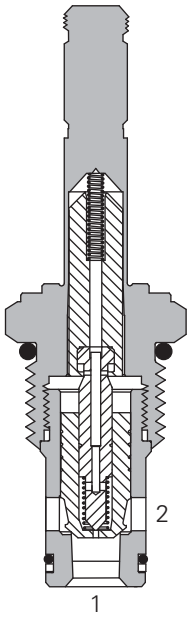

Performance data

Ratings and specifications

Performance data is typical with fluid at 21,8 cST (105 SUS) and 49°C (120°F)	
Typical application pressure (all ports)	210 bar (3000 psi)
Cartridge fatigue pressure (infinite life)	210 bar (3000 psi)
Rated flow	45 L/min (12 USgpm)
Internal leakage	Less than 5 drops/min. max @ 210 bar (3000 psi)
Coil duty	Continuous from 85% to 110% of nominal voltage
Response times (100% rated voltage and flow)	Energize: 18 ms, de-energize: 46 ms
Temperature range	-40° to 120°C (-40° to 248°F)
Cavity	C-10-2
Fluids	All general purpose hydraulic fluids such as: MIL-H-5606, SAE 10, SAE 20 etc.
Filtration	Cleanliness code 18/**16/13**
Housing material (standard)	Aluminum
Weight including coil	0,4 kg (0.087 lbs)
Seal kit	565803 (Buna-N), 566086 (Viton®)

Viton is a registered trademark of E.I. DuPont

Description

This is a 2-way, 2-position, poppet type, pilot operated, normally closed solenoid valve. This valve is used in applications requiring low leakage, such as load holding applications or as a general purpose diverter or dump valve.

Pressure drop

Cartridge only

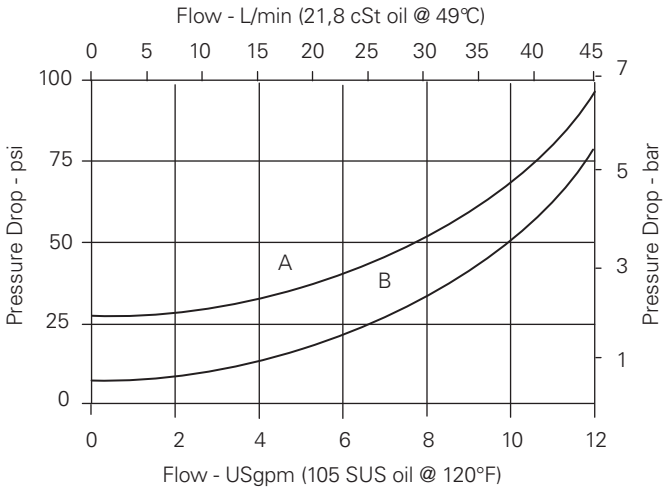

Pressure drop vs. Flow

A - Port 1 to port 2 de-energized

B - Port 2 to port 1 energized

Where measurements are critical request certified drawings. We reserve the right to change specifications without notice.

SV1-10-C/CM/CR - Solenoid valve

Poppet type, normally closed solenoid valve
45 L/min (12 USgpm) • 210 bar (3000 psi)

Model code

SV1	–	10	(V)	–	C	(*)	(F)	–	**	–	****	*	–	00
1		2	3		4	5	6		7		8	9		10

1 Function
SV1 - Solenoid valve

2 Size
10 - 10 size

3 Seal material
Blank - Buna-N
V - Viton®

4 Style
C - Normally closed

5 Manual override option
Blank - No manual override
M - Knob type
R - Cable type

For valve dimensions with manual override option installed see page A-980.

6 Filter option
Blank - None
F - Filter screen

7 Port size

Code	Port size	Housing number
0	Cartridge only	
3B	3/8" BSPP	02-175464*
6T	SAE 6	566151*
2G	1/4" BSPP	876702
3G	3/8" BSPP	876703
6H	SAE 6	876700
8H	SAE 8	876701

*Light duty housing.
See section J for housing details.

8 Voltage rating
00 - No coil
12D - 12VDC
24D - 24VDC
36D - 36VDC
24A - 24VAC
115A - 115VAC
230A - 230VAC
12B - 12VDC/w diode*
24B - 24VDC/w diode*
*Optional arc suppression diode.

9 Connector types
Blank - No coil
G - ISO 4400 DIN 43650
Q - Spade terminals
W - Flying lead
N - Deutsch (DC only)
Y - Amp JR (DC only)
D - Metripack 150 male (DC only)
J - Metripack 280 male (DC only)

For coil part numbers and dimensions see section C.

10 Special features
00 - None

(Only required if valve has special features, omitted if "00".)

Note: Use J series, 23 W coils with this solenoid valve.

Dimensions
mm (inch)

Cartridge only

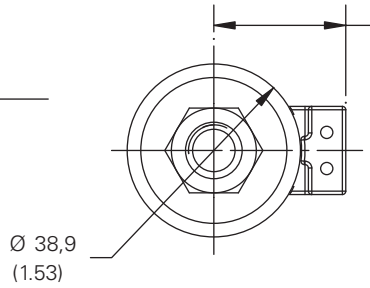

Torque cartridge in aluminum housing 47-54 Nm (35-40 ft lbs)

Note: When solenoid valve is ordered as cartridge only, coil nut is included.

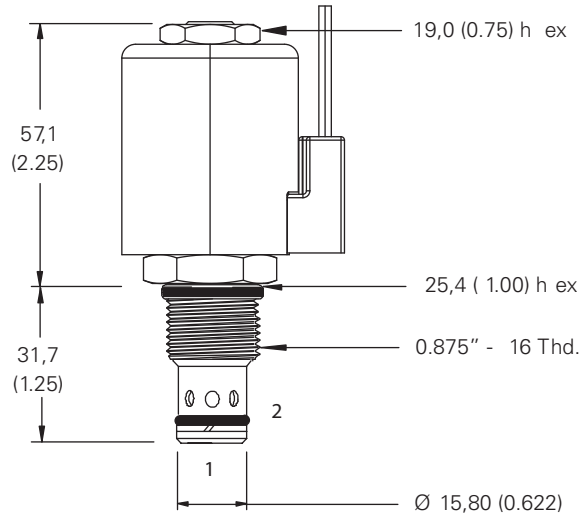

⚠ Warning
Maintain 5-8 Nm (4-6 ft lbs) maximum torque on valve tube nut.

Over tightening may cause valve failure.

Where measurements are critical request certified drawings. We reserve the right to change specifications without notice.

SV11-10-C/CM - Solenoid valve

Poppet type, normally closed solenoid valve
45 L/min (12 USgpm) • 350 bar (5000 psi)

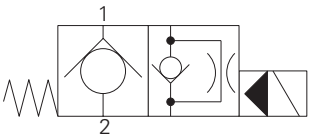

Operation

In the de-energized position the valve blocks flow from port 2 to 1 and free flow is allowed from port 1 to 2.

When the solenoid is energized the pilot poppet is pulled off the seat allowing the valve to open from port 2 to 1. in the reverse direction the flow is restricted by the pilot orifice.

Features

Hardened and ground working parts. Lapped seat for low leakage. IP69K Tough coil compatibility. Continuously rated. Compact design with low pressure drop. 350 bar working pressure.

Sectional view

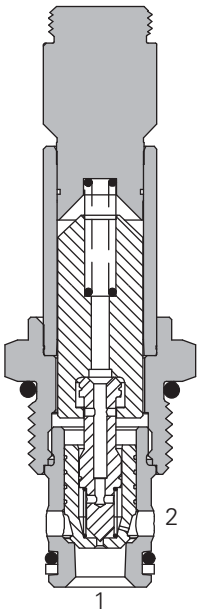

Performance data

Ratings and specifications

Performance data is typical with fluid at 21,8 cST (105 SUS) and 49°C (120°F)	
Typical application pressure (all ports)	350 bar (5000 psi)
Cartridge fatigue pressure (infinite life)	310 bar (4500 psi)
Rated flow	45 L/min (12 USgpm)
Internal leakage, port 2 to port 1	5 drops/min, max @ 350 bar (5000 psi)
Temperature range	-40° to 100°C (-40° to 212°F)
Coil duty	Continuous from 85% to 110% of nominal voltage
Cavity	C-10-2
Fluids	All general purpose hydraulic fluids such as: MIL-H-5606, SAE 10, SAE 20 etc.
Filtration	Cleanliness code 18/**16/13**
Housing material (standard)	Steel
Weight cartridge only	0,18 kg (0.39 lbs)
Seal kit	565803 (Buna-N), 566086 (Viton®)

Viton is a registered trademark of E.I. DuPont

Description

This is a 2-way, 2-position, poppet type, high pressure, pilot operated, normally closed solenoid valve. This valve is used in applications requiring low leakage, such as load holding applications or as a general purpose diverter or dump valve.

Pressure drop

Cartridge only

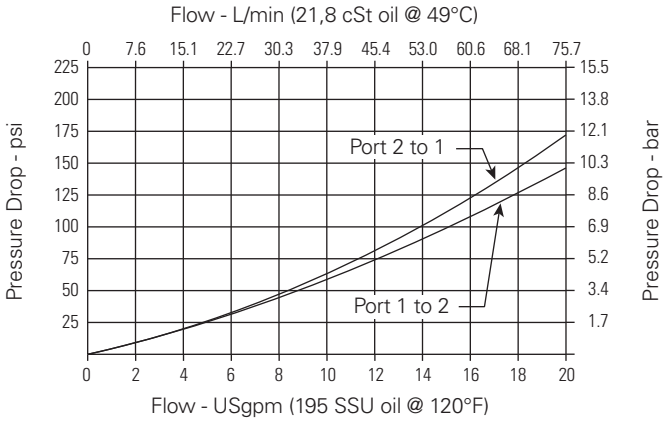

A - Port 1 to port 2 de-energized

B - Port 2 to port 1 energized

Where measurements are critical request certified drawings. We reserve the right to change specifications without notice.

SV11-10-C/CM - Solenoid valve

Poppet type, normally closed solenoid valve
45 L/min (12 USgpm) • 350 bar (5000 psi)

Model code

SV11	– 10	(V) – C	(M) – (S)	** – ****	*	H – 00
1	2	3 4	5 6	7 8	9	10 11

1 Function
SV11 - Solenoid valve

2 Size
10 - 10 size

3 Seal material
Blank - Buna-N
V - Viton®

4 Style
C - Normally closed

5 Manual override option
Blank - No manual override
M - Manual override

For valve dimensions with manual override option installed see page A-980.

6 Valve housing material
Blank - Cartridge only
S - Steel

7 Port size

Code	Port size	Housing number
0	Cartridge only	
2G	1/4" BSPP	02-175102
3G	3/8" BSPP	02-175103
6T	SAE 6	02-175100
8T	SAE 8	02-175101

See section J for housing details.

8 Voltage rating
00 - No coil
12D - 12VDC
24D - 24VDC
36D - 36VDC
24A - 24VAC
115A - 115VAC
230A - 230VAC
12B - 12VDC/w diode*
24B - 24VDC/w diode*
*Optional arc suppression diode.

9 Connector types
Blank - No coil
G - ISO 4400 DIN 43650
Q - Spade terminals
W - Flying lead
N - Deutsch (DC only)
Y - Amp JR (DC only)
D - Metripack 150 male (DC only)
J - Metripack 280 male (DC only)

10 Coil series
H - 10 series, 29 W For coil part numbers and dimensions see section C.

11 Special features
00 - None

(Only required if valve has special features omitted if "00".)

Dimensions
mm (inch)

Torque cartridge in steel housing 68-75 Nm (50-55 ft. lbs)

Note: When solenoid valve is ordered as cartridge only, coil nut is included.

Cartridge only

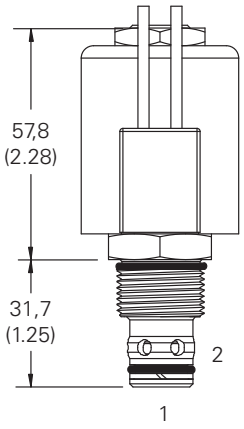

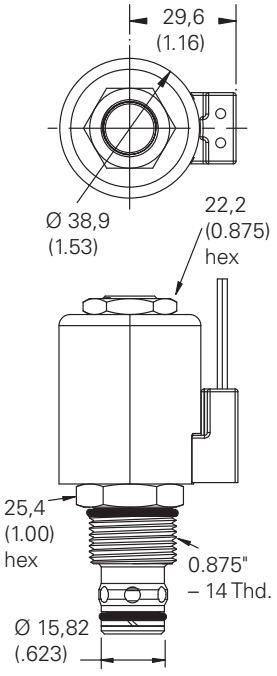

Installation drawings (Steel)

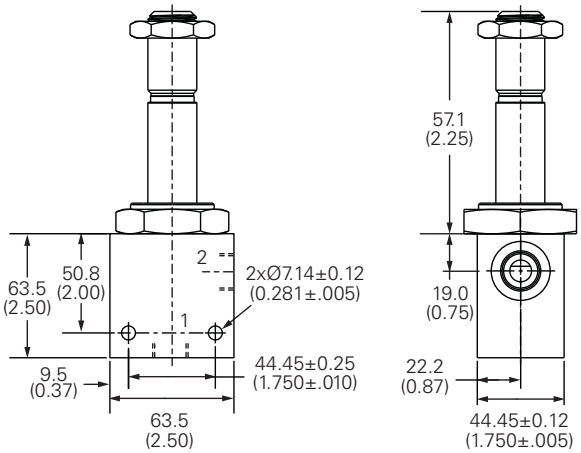

⚠ Warning
Maintain 5-8 Nm (4-6 ft lbs) maximum torque on valve tube nut.

Over tightening may cause valve failure.

Where measurements are critical request certified drawings. We reserve the right to change specifications without notice.

SV3-8-C/CM - Solenoid valve

Poppet type, normally closed solenoid valve
23 L/min (6 USgpm) • 210 bar (3000 psi)

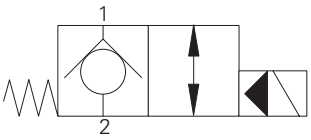

Operation

In the de-energized position the valve blocks flow from port 2 to 1 and free flow is allowed from port 1 to 2.

When the solenoid is energized the pilot poppet is pulled off the seat allowing the valve to open in both directions.

Features

Hardened and ground working parts. Lapped seat for low leakage. IP69K Tough coil compatibility. Continuously rated. Compact design with low pressure drop.

Sectional view

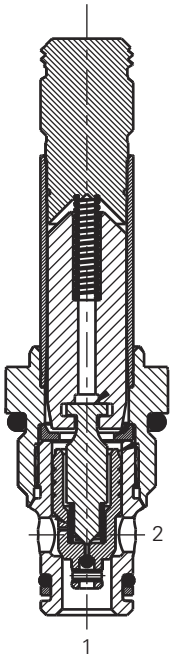

Performance data

Ratings and specifications

Performance data is typical with fluid at 21,8 cST (105 SUS) and 49°C (120°F)	
Typical application pressure (all ports)	210 bar (3000 psi)
Cartridge fatigue pressure (infinite life)	210 bar (3000 psi)
Rated flow	23 L/min (6 USgpm)
Internal leakage	less than 5 drops/min @ 210 bar (3000 psi)
Coil duty	Continuous from 85% to 110% of nominal voltage
Response times (100% rated voltage and flow)	Energize: 18 ms De-Energize: 46 ms
Temperature range	-40° to 120°C (-40° to 248°F)
Cavity	C-8-2
Fluids	All general purpose hydraulic fluids such as: MIL-H-5606, SAE 10, SAE 20 etc.
Filtration	Cleanliness code 18/**16/13**
Housing material (standard)	Aluminum
Weight including coil	0,28 kg (0.62 lbs)
Seal kit	02-165875 (Buna-N), 02-165877 (Viton®)

Viton is a registered trademark of E.I. DuPont

Description

This is a 2-way, 2-position, poppet type, pilot operated, normally closed solenoid valve. This valve is used in applications requiring low leakage, such as load holding applications or as a general purpose diverter or dump valve.

Pressure drop

Cartridge only

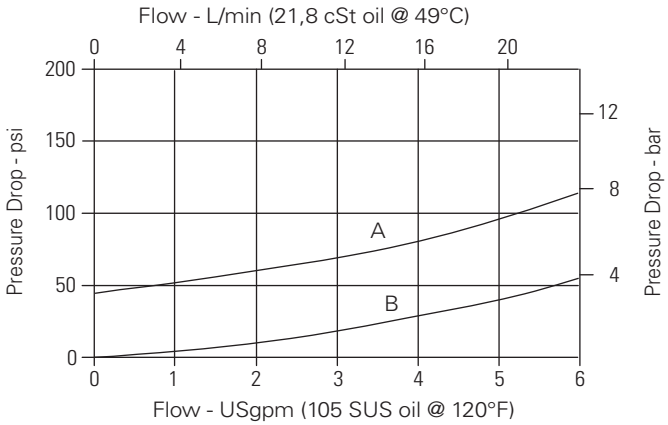

A - Port 1 to port 2 de-energized
B - Port 2 to port 1 energized

Where measurements are critical request certified drawings. We reserve the right to change specifications without notice.

SV3-8-C/CM - Solenoid valve

Poppet type, normally closed solenoid valve
23 L/min (6 USgpm) • 210 bar (3000 psi)

Model code

SV3	–	8	–	(V)	C	–	(M)	(F)	–	(A)	**	–	****	*	S	–	00
1		2		3	4		5	6		7	8		9	10	11		12

1 Function
SV3 - Solenoid valve

2 Size
8 - 8 size

3 Seal material
Blank - Buna-N
V - Viton®

4 Style
C - Normally closed

5 Manual override option
Blank - No manual override
M - Knob type

For valve dimensions with manual override option installed see page A-980.

6 Filter option
Blank - None
F - Filter screen

7 Valve housing material
Omit for cartridge only
A - Aluminum

8 Port size

Code	Port size	Housing number
0	Cartridge only	
2G	1/4" BSPP	02-160727
3G	3/8" BSPP	02-160728
4T	SAE 4	02-160730
6T	SAE 6	02-160731
8T	SAE 8	02-160732

See section J for housing details.

9 Voltage rating
00 - No coil
12D - 12VDC
24D - 24VDC
36D - 36VDC
24A - 24VAC
115A - 115VAC
230A - 230VAC
12B - 12VDC/w diode*
24B - 24VDC/w diode*

*Optional arc suppression diode.

10 Connector types
Blank - No coil
G - ISO 4400 DIN 43650
Q - Spade terminals
W - Flying lead
N - Deutsch (DC only)
Y - Amp JR (DC only)
D - Metripack 150 male (DC only)
J - Metripack 280 male (DC only)

11 Coil series
S - 8 series, 20 W

For coil part numbers and dimensions see section C.

12 Special features
00 - None

(Only required if valve has special features, omitted if "00".)

Dimensions
mm (inch)

Torque cartridge in aluminum housing 34-41 Nm (25-30 ft lbs)

Note: When solenoid valve is ordered as cartridge only, coil nut is included.

Cartridge only

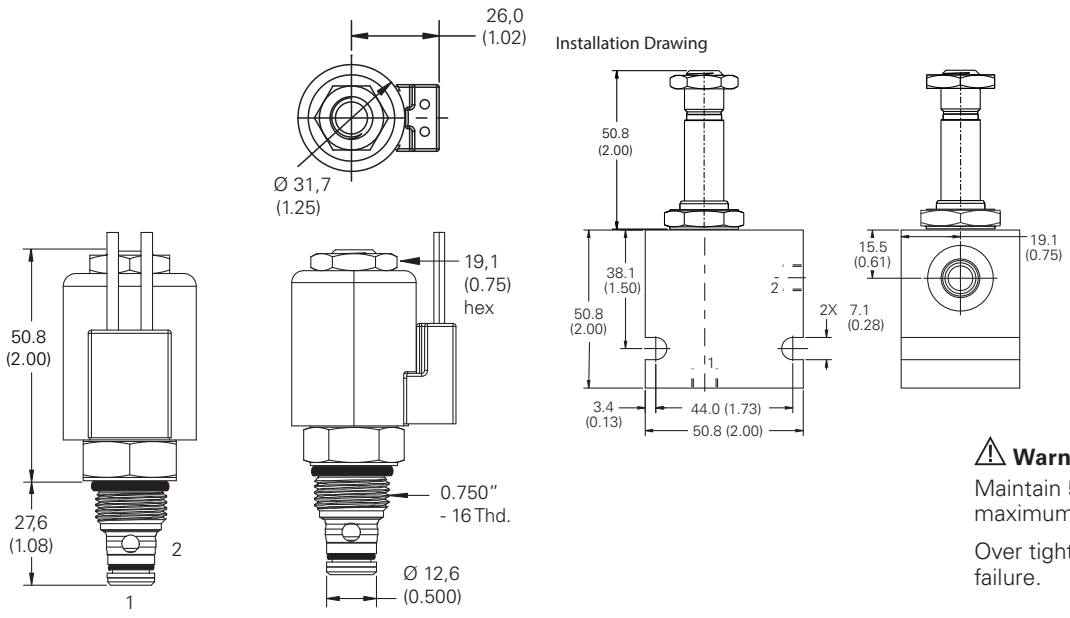

⚠ Warning
Maintain 5-8 Nm (4-6 ft lbs) maximum torque on valve tube nut.

Over tightening may cause valve failure.

Where measurements are critical request certified drawings. We reserve the right to change specifications without notice.

SV3-10-C/CM/CR - Solenoid valve

2-way, 2-position, normally closed, poppet type solenoid valve
45 L/min (12 USgpm) • 210 bar (3000 psi)

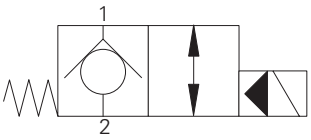

Operation

In the de-energized position the valve blocks flow from port 2 to 1 and free flow is allowed from port 1 to 2.

When the solenoid is energized the pilot poppet is pulled off the seat allowing the valve to open in both directions.

Features

Hardened and ground working parts. Lapped seat for low leakage. IP69K Tough coil compatibility. Continuously rated. Compact design with low pressure drop.

Sectional view

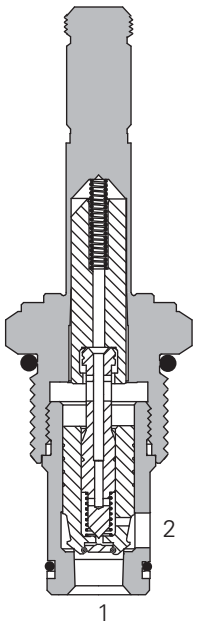

Performance data

Ratings and specifications

Performance data is typical with fluid at 21,8 cST (105 SUS) and 49°C (120°F)	
Typical application pressure (all ports)	210 bar (3000 psi)
Cartridge fatigue pressure (infinite life)	210 bar (3000 psi)
Rated flow	45 L/min (12 USgpm)
Internal leakage	less than 5 drops/min, max @ 210 bar (3000 psi)
Temperature range	-40° to 120°C (-40° to 248°F)
Coil duty	Continuous from 85% to 110% of nominal voltage
Cavity	C-10-2
Fluids	All general purpose hydraulic fluids such as: MIL-H-5606, SAE 10, SAE 20 etc.
Filtration	Cleanliness code 18/**16/13**
Housing material (standard)	Aluminum
Weight cartridge only	0,4 kg (0.87 lbs)
Seal kit	565803 (Buna-N), 566086 (Viton®)

Viton is a registered trademark of E.I. DuPont

Description

This is a 2-way, 2-position, poppet type, pilot operated, normally closed solenoid valve. This valve is used in applications requiring low leakage, such as load holding applications or as a general purpose diverter or dump valve.

Pressure drop curves

Cartridge only

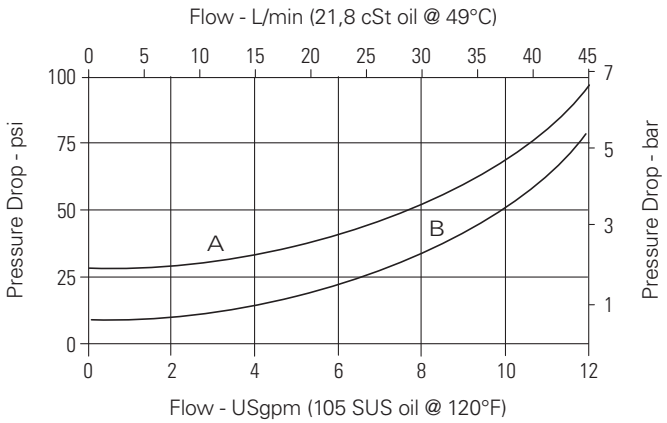

A - Port 1 to port 2 de-energized
B - Port 2 to port 1 energized

Where measurements are critical request certified drawings. We reserve the right to change specifications without notice.

SV3-10-C/CM/CR - Solenoid valve

2-way, 2-position, normally closed, poppet type solenoid valve
45 L/min (12 USgpm) • 210 bar (3000 psi)

Model code

SV3	–	10	(V)	–	C	(*)	(F)	–	**	–	****	*	–	00
1		2	3		4	5	6		7		8	9		10

1 Function
SV3 - Solenoid valve

2 Size
10 - 10 size

3 Seal material
Blank - Buna-N
V - Viton®

4 Style
C - Normally closed

5 Manual override option
Blank - No manual override
M - Knob type
R - Cable type

For valve dimensions with manual override option installed see page A-980.

6 Filter options
Blank - None
F - Filter screen

7 Port size

Code	Port size	Housing number
0	Cartridge only	
3B	3/8" BSPP	02-175462*
2G	1/4" BSPP	876702
3G	3/8" BSPP	876703
6T	SAE 6	566151*
6H	SAE 6	876700
8H	SAE 8	876701

See section J for housing details.
*Light duty housing

8 Voltage rating
00 - No coil
12D - 12VDC
24D - 24VDC
36D - 36VDC
24A - 24VAC
115A - 115VAC
230A - 230VAC
12B - 12VDC/w diode*
24B - 24VDC/w diode*

*Optional arc suppression diode.

9 Connector types
Blank - No coil
G - ISO 4400 DIN 43650
Q - Spade terminals
W - Flying lead
N - Deutsch (DC only)
Y - Amp JR (DC only)
D - Metripack 150 male (DC only)
J - Metripack 280 male (DC only)

For coil part numbers and dimensions see section C.

10 Special features
00 - None

(Only required if valve has special features, omitted if "00.")

Dimensions
mm (inch)

Cartridge only

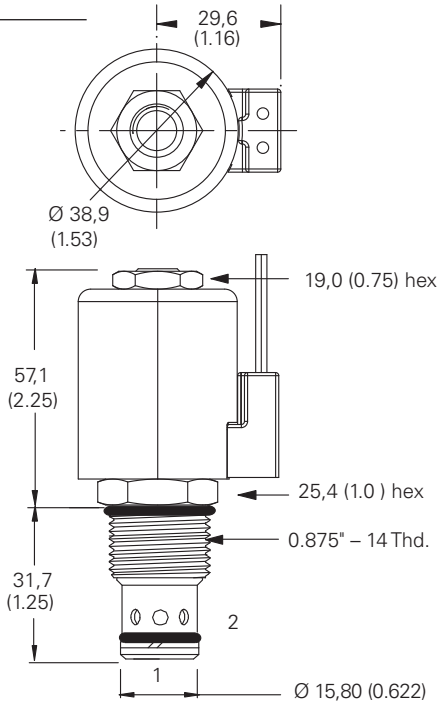

Torque cartridge in aluminum housing 47-54 Nm (35-40 ft lbs)

Note: When solenoid valve is ordered as cartridge only, coil nut is included.

Note: Use J series, 23 W coils with this solenoid valve.

Installation drawing

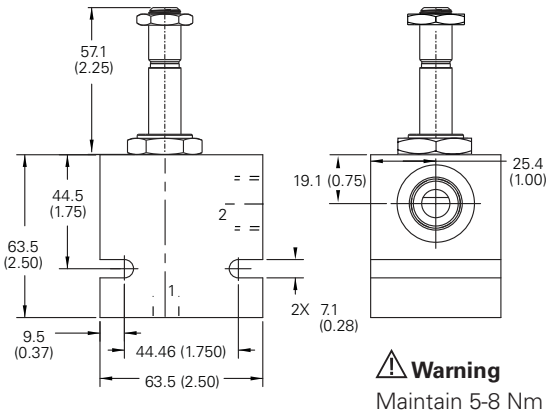

⚠ Warning
Maintain 5-8 Nm (4-6 ft lbs) maximum torque on valve tube nut.

Over tightening may cause valve failure.

Where measurements are critical request certified drawings. We reserve the right to change specifications without notice.

SV13-10-C/CM - Solenoid valve

Poppet type, normally closed solenoid valve, (free reverse flow)
45 L/min (12 USgpm) • 350 bar (5000 psi)

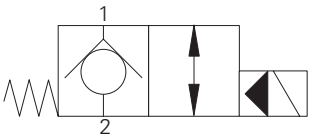

Operation

In the de-energized position the valve blocks flow from port 2 to 1 and free flow is allowed from port 1 to 2.

When the solenoid is energized the pilot poppet is pulled off the seat allowing the valve to open in both directions.

Features

Hardened and ground working parts. Lapped seat for low leakage. IP69K Tough coil compatibility. Continuously rated. Compact design with low pressure drop. 350 bar working pressure.

Sectional view

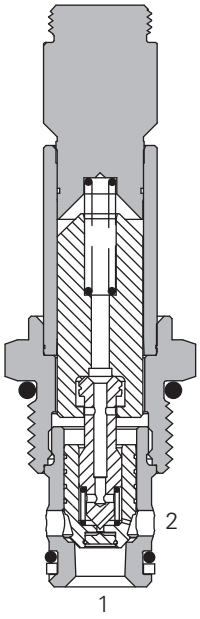

Performance data

Ratings and specifications

Performance data is typical with fluid at 21,8 cST (105 SUS) and 49°C (120°F)	
Typical application pressure (all ports)	350 bar (5000 psi)
Cartridge fatigue pressure (infinite life)	310 bar (4500 psi)
Rated flow	45 L/min (12 USgpm)
Internal leakage, port 2 to port 1	5 drops/min, max @ 350 bar (5000 psi)
Temperature range	-40° to 100°C (-40° to 212°F)
Coil duty	Continuous from 85% to 110% of nominal voltage
Cavity	C-10-2
Fluids	All general purpose hydraulic fluids such as: MIL-H-5606, SAE 10, SAE 20 etc
Filtration	Cleanliness code 18/**16/13**
Housing material (standard)	Steel
Weight cartridge only	0,18 kg (0.39 lbs)
Seal kit	565803 (Buna-N), 566086 (Viton®)

Viton is a registered trademark of E.I. DuPont

Description

This is a 2-way, 2-position, poppet type, high pressure, pilot operated, normally closed solenoid valve. This valve is used in applications requiring low leakage, such as load holding applications or as a general purpose diverter or dump valve.

Pressure drop

Cartridge only

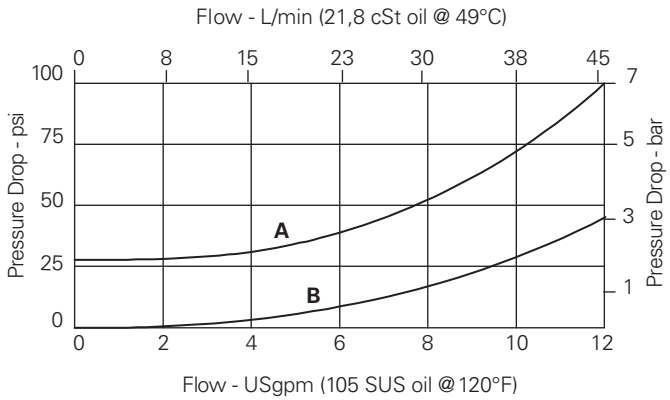

A - Port 1 to port 2
B - Port 2 to port 1 energized

Where measurements are critical request certified drawings. We reserve the right to change specifications without notice.

SV13-10-C/CM - Solenoid valve

Poppet type, normally closed solenoid valve, (free reverse flow)
45 L/min (12 USgpm) • 350 bar (5000 psi)

Model code

SV13	–	10	(V)	–	C	(M)	–	(S)	**	–	****	*	H	–	00
1		2	3		4	5		6	7		8	9	10		11

1 Function
SV13 - Solenoid valve

2 Size
10 - 10 size

3 Seal material
Blank - Buna-N
V - Viton®

4 Style
C - Normally closed

5 Manual override option
Blank - No manual override
M - Manual override

For valve dimensions with manual override option installed see page A-980.

6 Valve housing material
Blank - Cartridge only
S - Steel

7 Port size

Code	Port size	Housing number
0	Cartridge only	
2G	1/4" BSPP	02-175102
3G	3/8" BSPP	02-175103
6T	SAE 6	02-175100
8T	SAE 8	02-175101

See section J for housing details.

8 Voltage rating
00 - No coil
12D - 12VDC
24D - 24VDC
36D - 36VDC
24A - 24VAC
115A - 115VAC
230A - 230VAC
12B - 12VDC/w diode*
24B - 24VDC/w diode*

*Optional arc suppression diode.

9 Connector types
Blank - No coil
G - ISO 4400 DIN 43650
Q - Spade terminals
W - Flying lead
N - Deutsch (DC only)
Y - Amp JR (DC only)
D - Metripack 150 male (DC only)
J - Metripack 280 male (DC only)

10 Coil series
H - 10 Series, 29 W

For coil part numbers and dimensions see section C.

11 Special features
00 - None

(Only required if valve has special features, omitted if "00".)

Dimensions
mm (inch)

Torque cartridge in steel housing 68-75 Nm (50-55 ft lbs)

Note: When solenoid valve is ordered as cartridge only, coil nut is included.

Cartridge only

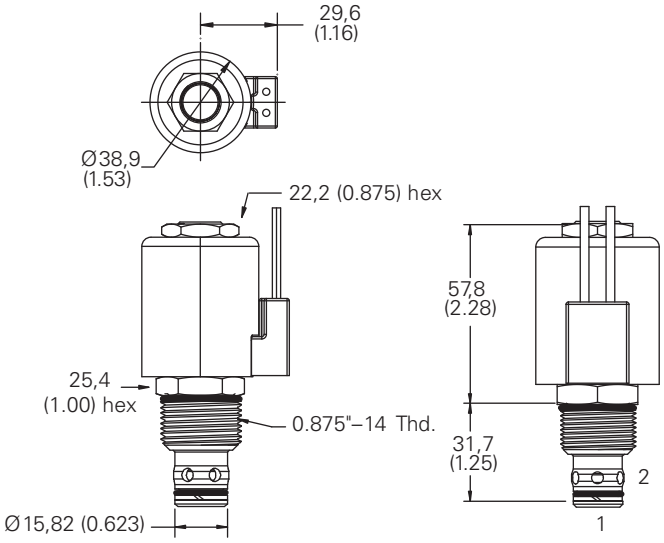

⚠ Warning
Maintain 5-8 Nm (4-6 ft lbs) maximum torque on valve tube nut.

Over tightening may cause valve failure.

Where measurements are critical request certified drawings. We reserve the right to change specifications without notice.

SBV1-10-C - Solenoid valve

2-way, 2-position, normally closed, bi-directional, poppet type solenoid valve
76 L/min (20 USgpm) • 210 bar (3000 psi)

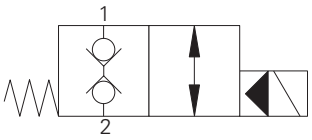

Operation

In the de-energized position the valve is blocked in both directions.

When the solenoid is energized the pilot poppet is released from the seat allowing the main poppet to open. A series of internal check valves allows full flow in both directions.

Features

Hardened and ground working parts. Lapped seat for low leakage. IP69K Tough coil compatibility. Continuously rated. Compact design with low pressure drop. 210 bar working pressure.

Sectional view

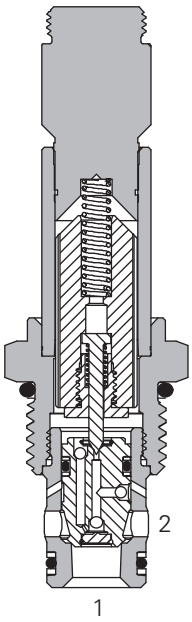

Performance data

Ratings and specifications

Performance data is typical with fluid at 21,8 cST (105 SUS) and 49°C (120°F)	
Typical application pressure (all ports)	210 bar (3000 psi)
Cartridge fatigue pressure (infinite life)	210 bar (3000 psi)
Rated flow	76 L/min (20 USgpm)
Internal leakage	5 drops/min, max @ 210 bar (3000 psi)
Temperature range	-40° to 100°C (-40° to 212°F)
Coil duty	Continuous from 85% to 110% of nominal voltage
Cavity	C-10-2
Fluids	All general purpose hydraulic fluids such as: MIL-H-5606, SAE 10, SAE 20 etc.
Filtration	Cleanliness code 18/16/13
Housing material (standard)	Aluminum or steel
Weight cartridge only	0,18 kg (0.39 lbs)
Seal kit	565806 (Buna-N), 889627 (Viton®)

Viton is a registered trademark of E.I. DuPont

Description

This is a 2-way 2-position, high pressure bi-directional, pilot operated, normally closed poppet type screw in cartridge valve. The valve is ideal for isolating and holding actuators in position.

Pressure drop

Cartridge only

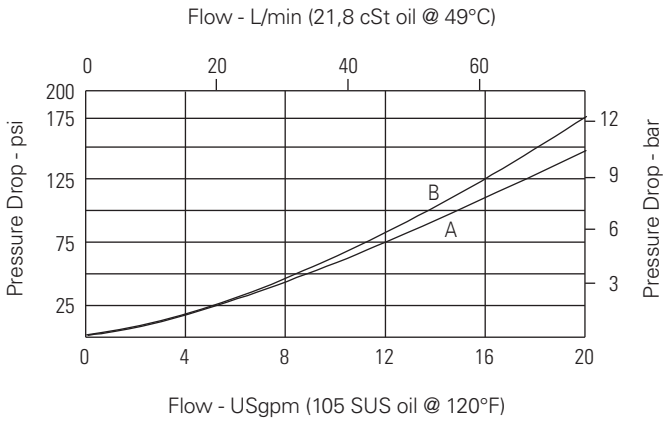

A - Port 1 to port 2
B - Port 2 to port 1

Where measurements are critical request certified drawings. We reserve the right to change specifications without notice.

SBV1-10-C - Solenoid valve

2-way, 2-position, normally closed, bi-directional, poppet type solenoid valve
76 L/min (20 USgpm) • 210 bar (3000 psi)

Model code

SBV1	10	(V)	C	(*)	**	****	*	J	00
1	2	3	4	5	6	7	8	9	10

1 Function
SBV1 - Solenoid bi-directional valve

2 Size
10 - 10 size

3 Seal material
Blank - Buna-N
V - Viton®

4 Style
C - Normally closed

5 Valve housing material
Blank - Cartridge only
A - Aluminum
S - Steel

6 Port size

Code	Port size	Housing number	
		Aluminium	Steel
0	Cartridge only		
2G	1/4" BSPP	876702	02-175102
3G	3/8" BSPP	876703	02-175103
3B	3/8" BSPP	02-175462	–
6H	SAE 6	876700	–
6T	SAE 6	566151	02-175100
8H	SAE 8	876701	–
8T	SAE 8	–	02-175101

See section J for housing details.

7 Voltage rating
00 - No coil
12D - 12VDC
24D - 24VDC
36D - 36VDC
24A - 24VAC
115A - 115VAC
230A - 230VAC
12B - 12VDC/w diode*
24B - 24VDC/w diode*
*Optional arc suppression diode.

8 Connector types
Blank - No coil
G - ISO 4400 DIN 43650
Q - Spade terminals
W - Leadwire
N - Deutsch (DC only)
Y - Amp JR (DC only)
D - Metripack 150 male (DC only)
J - Metripack 280 male (DC only)

9 Coil series
J - 10 series, 23 W

For coil part numbers and dimensions see section C.

10 Special features
00 - None
(Only required if valve has special features, omitted if "00.")

Dimensions
mm (inch)

Torque cartridge in housing
A - 47-54 Nm (35-40 ft lbs)
S - 68-75 Nm (50-55 ft lbs)

Note: For applications above 210 bar please consult our technical department or use the steel body option.

Cartridge only

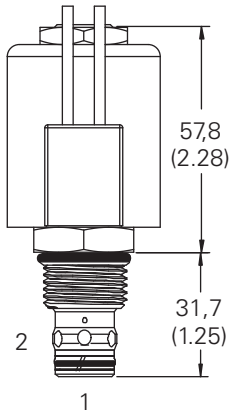

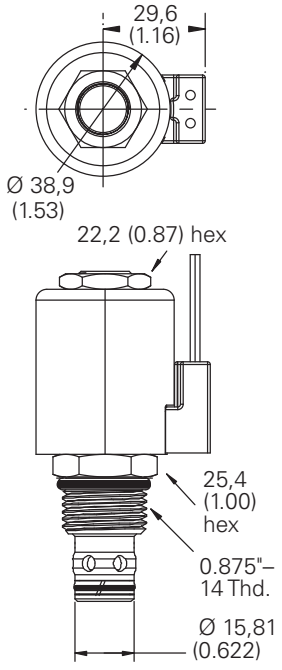

Installation drawing (Aluminum)

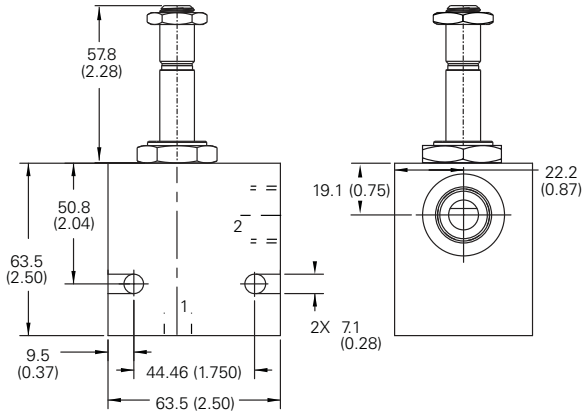

⚠ Warning
Maintain 5-8 Nm (4-6 ft lbs) maximum torque on valve tube nut.

Over tightening may cause valve failure.

⚠ Warning
Aluminum housings can be used for pressures up to 210 bar (3000 psi). Steel housings **must** be used for operating pressures **above** 210 bar (3000 psi).

Where measurements are critical request certified drawings. We reserve the right to change specifications without notice.

SBV11-10-C - Solenoid valve

2-way, 2-position, normally closed, bi-directional, poppet type solenoid valve
76 L/min (20 USgpm) • 350 bar (5000 psi)

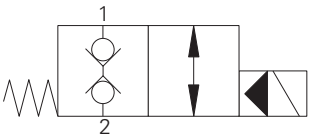

Operation

In the de-energized position the valve is blocked in both directions.

When the solenoid is energized the pilot poppet is released from the seat allowing the main poppet to open. A series of internal check valves allows full flow in both directions.

Features

Hardened and ground working parts. Lapped seat for low leakage. IP69K Tough coil compatibility. Continuously rated. Compact design with low pressure drop. 350 bar working pressure.

Sectional view

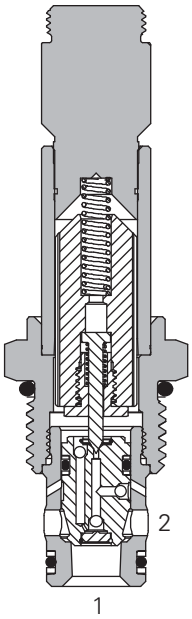

Performance data

Ratings and specifications

Performance data is typical with fluid at 21,8 cST (105 SUS) and 49°C (120°F)	
Typical application pressure (all ports)	350 bar (5000 psi)
Cartridge fatigue pressure (infinite life)	310 bar (4500 psi)
Rated flow	76 L/min (20 USgpm)
Internal leakage	5 drops/min, max @ 350 bar (5000 psi)
Temperature range	-40° to 100°C (-40° to 212°F)
Coil duty	Continuous from 85% to 110% of nominal voltage
Cavity	C-10-2
Fluids	All general purpose hydraulic fluids such as: MIL-H-5606, SAE 10, SAE 20 etc.
Filtration	Cleanliness code 18/**16/13**
Housing material (standard)	Aluminum or steel
Weight cartridge only	0,18 kg (0.39 lbs)
Seal kit	565806 (Buna-N), 889627 (Viton®)

Viton is a registered trademark of E.I. DuPont

Description

This is a 2-way 2-position, high pressure bi-directional, pilot operated, normally closed poppet type screw in cartridge valve. The valve is ideal for isolating and holding actuators in position.

Pressure drop

Cartridge only

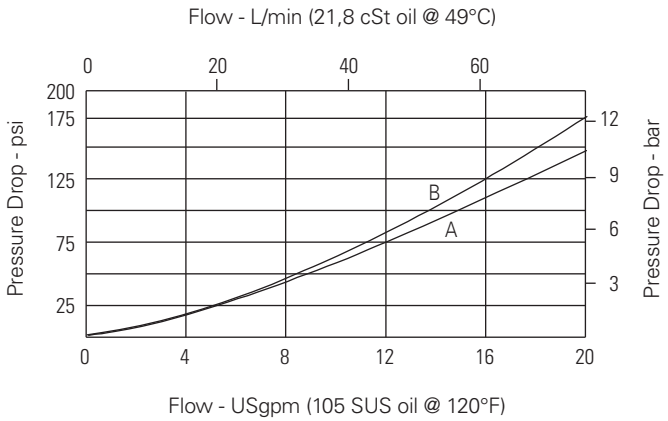

A - Port 1 to port 2
B - Port 2 to port 1

Where measurements are critical request certified drawings. We reserve the right to change specifications without notice.

SBV11-10-C - Solenoid valve

2-way, 2-position, normally closed, bi-directional, poppet type solenoid valve
76 L/min (20 USgpm) • 350 bar (5000 psi)

Model code

SBV11	10	(V)	C	(*)	**	****	*	H	– 00
1	2	3	4	5	6	7	8	9	10

1 Function
SBV11 - Solenoid bi-directional valve

2 Size
10 - 10 size

3 Seal material
Blank - Buna-N
V - Viton®

4 Style
C - Normally closed

5 Valve housing material
Blank - Cartridge only
A - Aluminum
S - Steel

6 Port size

Code	Port size	Housing number	
		Aluminium	Steel
0	Cartridge only		
2G	1/4" BSPP	876702	02-175102
3G	3/8" BSPP	876703	02-175103
3B	3/8" BSPP	02-175462	–
6H	SAE 6	876700	–
6T	SAE 6	566151	02-175100
8H	SAE 8	876701	–
8T	SAE 8	–	02-175101

See section J for housing details.

7 Voltage rating
00 - No coil
12D - 12VDC
24D - 24VDC
36D - 36VDC
24A - 24VAC
115A - 115VAC
230A - 230VAC
12B - 12VDC/w diode*
24B - 24VDC/w diode*

*Optional arc suppression diode.

8 Connector types
Blank - No coil
G - ISO 4400 DIN 43650
Q - Spade terminals
W - Flying lead
N - Deutsch (DC only)
Y - Amp JR (DC only)
D - Metripack 150 male (DC only)
J - Metripack 280 male (DC only)

9 Coil series
H - 10 series, 29 W
For coil part numbers and dimensions see section C.

10 Special features
00 - None
(Only required if valve has special features, omitted if "00.")

Dimensions
mm (inch)

Torque cartridge in housing
A - 47-54 Nm (35-40 ft lbs)
S - 68-75 Nm (50-55 ft lbs)

Note: For applications above 210 bar please consult our technical department or use the steel body option.

Cartridge only

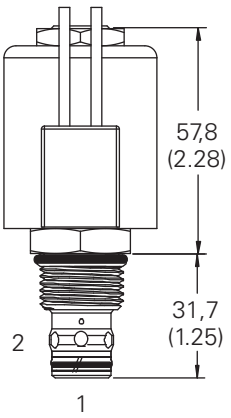

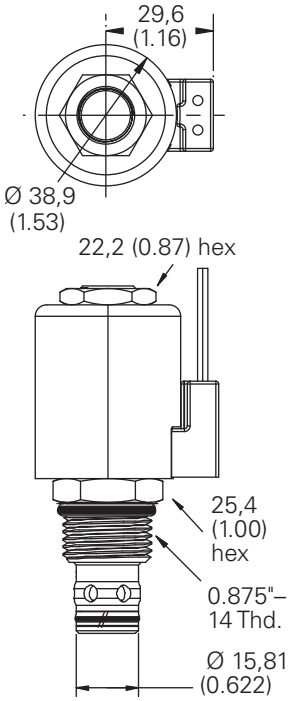

Installation drawing (Steel)

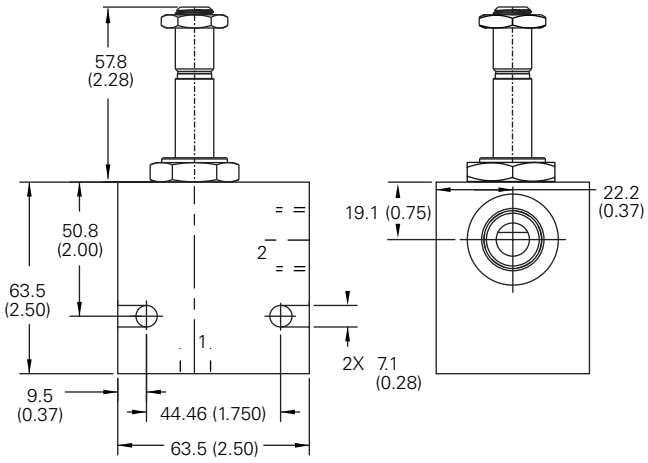

⚠ Warning
Maintain 5-8 Nm (4-6 ft lbs) maximum torque on valve tube nut.

Over tightening may cause valve failure.

⚠ Warning
Aluminum housings can be used for pressures up to 210 bar (3000 psi). Steel housings **must** be used for operating pressures **above** 210 bar (3000 psi).

Where measurements are critical request certified drawings. We reserve the right to change specifications without notice.

SV3-12-C/CM/CR - Solenoid valve

2-way, 2-position, normally closed, poppet type solenoid valve
114 L/min (30 USgpm) • 210 bar (3000 psi)

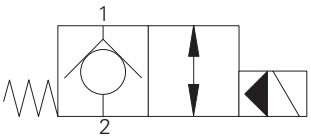

Operation

In the de-energized position the valve blocks flow from port 2 to 1 and free flow is allowed from port 1 to 2.

When the solenoid is energized the pilot poppet is pulled off the seat allowing the valve to open in both directions.

Features

Hardened and ground working parts. Lapped seat for low leakage. IP69K Tough coil compatibility. Continuously rated. Compact design with low pressure drop.

Sectional view

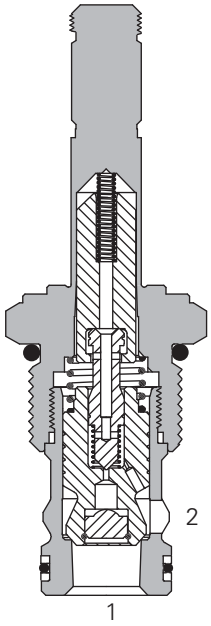

Performance data

Ratings and specifications

Performance data is typical with fluid at 21,8 cST (105 SUS) and 49°C (120°F)	
Typical application pressure (all ports)	210 bar (3000 psi)
Cartridge fatigue pressure (infinite life)	210 bar (3000 psi)
Rated flow	114 L/min (30 USgpm)
Internal leakage (port 2 to port 1)	less than 5 drops/min, max @ 210 bar (3000 psi)
Temperature range	-40° to 120°C (-40° to 248°F)
Coil duty	Continuous from 85% to 110% of nominal voltage
Response times (100% rated voltage and flow)	Energize: 75 ms De-Energize: 150 ms
Cavity	C-12-2 or C-12-2U Add "U" after number if undercut is required. If undercut is not specified, expect 10 psi @ 15 USgpm and 20 psi @ 30 USgpm higher pressure drop.
Fluids	All general purpose hydraulic fluids such as: MIL-H-5606, SAE 10, SAE 20 etc.
Filtration	Cleanliness code 18/**16/13**
Housing material (standard)	Aluminum
Weight including coil	0,336 kg (0.74 lbs)
Seal kit	02-165889 (Buna-N), 02-165888 (Viton®)

Viton is a registered trademark of E.I. DuPont

Description

This is a 2-way, 2-position, poppet type, pilot operated, normally closed solenoid valve. This valve is used in applications requiring low leakage, such as load holding applications or as a general purpose diverter or dump valve.

Pressure drop curves

Cartridge only

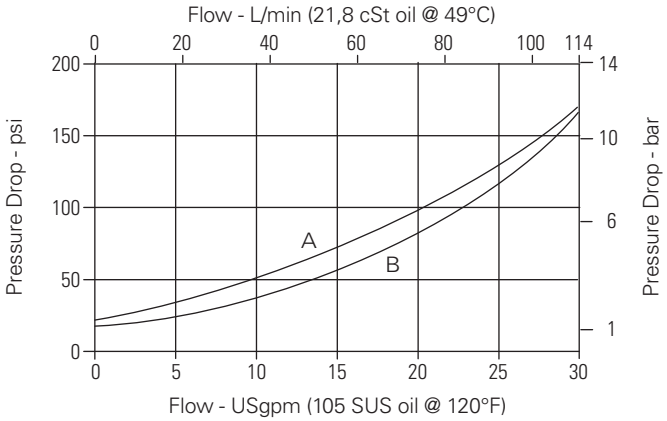

A - Port 1 to port 2 de-energized
B - Port 2 to port 1 energized

Where measurements are critical request certified drawings. We reserve the right to change specifications without notice.

SV3-12-C/CM/CR - Solenoid valve

2-way, 2-position, normally closed, poppet type solenoid valve
114 L/min (30 USgpm) • 210 bar (3000 psi)

Model code

SV3	–	12	(V)	–	C	(*)	–	(A)	–	***	–	****	*	–	00
1		2	3		4	5		6		7		8	9		10

1 Function
SV3 - Solenoid valve

2 Size
12 - 12 size

3 Seal material
Blank - Buna-N
V - Viton®

4 Style
C - Normally closed

5 Manual override option
Blank - No manual override
M - Knob type
R - Cable type

For valve dimensions with manual override option installed see page A-980.

6 Valve housing material
Omit for cartridge only
A - Aluminum (standard)
S - Steel

7 Port size

Code	Port size	Housing number	
		Aluminium	Steel
0	Cartridge only		
4G	1/2" BSPP	02-161118	02-172062
4GU	1/2" BSPP	02-161116	02-172512
6G	3/4" BSPP	02-161117	02-169665
6GU	3/4" BSPP	02-161115	02-162922
10T	SAE 10	02-160640	02-169744
10TU	SAE 10	02-160641	02-169817
12T	SAE 12	02-160644	02-169782
12TU	SAE 12	02-160645	02-169790

See section J for housing details.

8 Voltage rating
00 - No coil
12D - 12VDC
24D - 24VDC
36D - 36VDC
24A - 24VAC
115A - 115VAC
230A - 230VAC
12B - 12VDC/w diode*
24B - 24VDC/w diode*
*Optional arc suppression diode.

9 Connector types
Blank - No coil
G - ISO 4400 DIN 43650
Q - Spade terminals
W - Flying lead
N - Deutsch (DC only)
Y - Amp JR (DC only)
D - Metripack 150 male (DC only)
J - Metripack 280 male (DC only)

10 Special features
00 - None

(Only required if valve has special features, omitted if "00.")

Dimensions
mm (inch)

Torque cartridge in housing
A - 81-95 Nm (60-70 ft lbs)
S - 102-115 Nm (75-85 ft lbs)

Note: When solenoid valve is ordered as cartridge only, coil nut is included.

Note: Use J series, 23 W coils with this solenoid valve.

Cartridge only

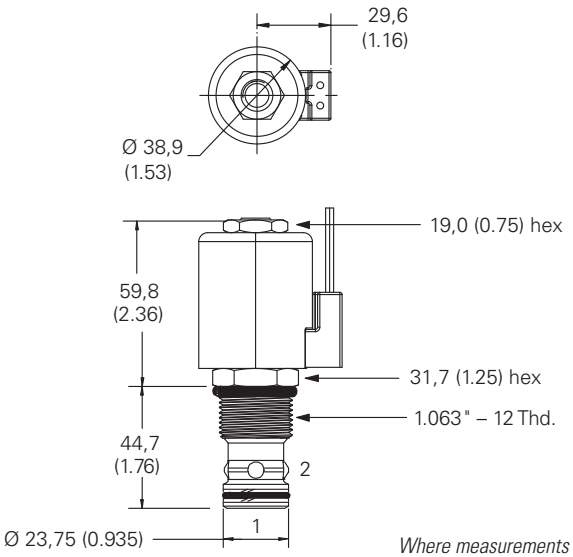

Installation drawing (Aluminum)

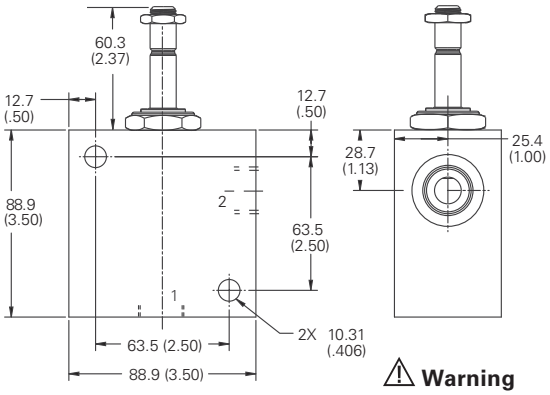

⚠ Warning
Maintain 5-8 Nm (4-6 ft lbs) maximum torque on valve tube nut.

Over tightening may cause valve failure.

Where measurements are critical request certified drawings. We reserve the right to change specifications without notice.

SV13-12-C/CM - Solenoid valve

2-way, 2-position, normally closed, poppet type solenoid valve
114 L/min (30 USgpm) • 350 bar (5000 psi)

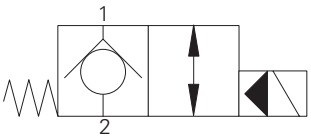

Operation

In the de-energized position the valve blocks flow from port 2 to 1 and free flow is allowed from port 1 to 2.

When the solenoid is energized the pilot poppet is pulled off the seat allowing the valve to open in both directions.

Features

Hardened and ground working parts. Lapped seat for low leakage. IP69K Tough coil compatibility. Continuously rated. Compact design with low pressure drop. 350 bar working pressure.

Sectional view

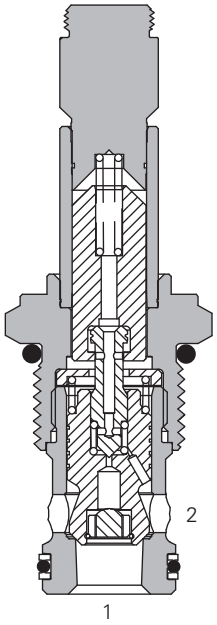

Performance data

Ratings and specifications

Performance data is typical with fluid at 21,8 cST (105 SUS) and 49°C (120°F)	
Typical application pressure (all ports)	350 bar (5000 psi)
Cartridge fatigue pressure (infinite life)	310 bar (4500 psi)
Rated flow	114 L/min (30 USgpm)
Internal leakage	less than 5 drops/min, max @ 350 bar (5000 psi)
Temperature range	-40° to 100°C (-40° to 212°F)
Coil duty	Continuous from 85% to 110% of nominal voltage
Cavity	C-12-2 or C-12-2U Add "U" after number if undercut is required. If undercut is not specified, expect 10 psi @ 15 USgpm and 20 psi @ 30 USgpm higher pressure drop.
Fluids	All general purpose hydraulic fluids such as: MIL-H-5606, SAE 10, SAE 20 etc.
Filtration	Cleanliness code 18/**16/13**
Housing material (standard)	Steel
Weight cartridge only	0,27 kg (0.59 lbs)
Seal kit	02-165889 (Buna-N), 02-165888 (Viton®)

Viton is a registered trademark of E.I. DuPont

Description

This is a 2-way, 2-position, poppet type, high pressure, pilot operated, normally closed solenoid valve. This valve is used in applications requiring low leakage, such as load holding applications or as a general purpose diverter or dump valve.

Pressure drop

Cartridge only

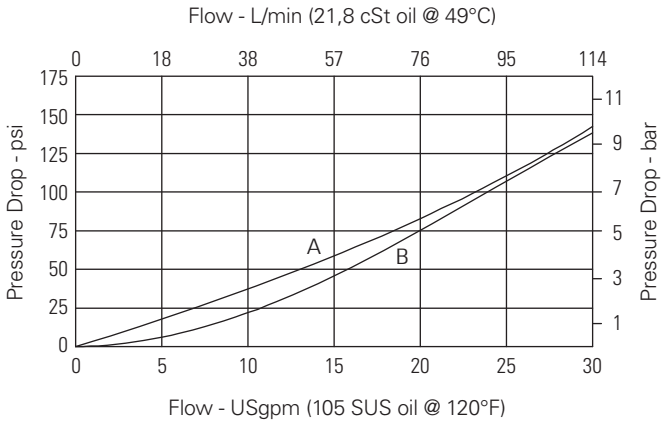

A - Port 1 to port 2
B - Port 2 to port 1 energized

Where measurements are critical request certified drawings. We reserve the right to change specifications without notice.

SV13-12-C/CM - Solenoid valve

2-way, 2-position, normally closed, poppet type solenoid valve
114 L/min (30 USgpm) • 350 bar (5000 psi)

Model code

SV13	–	12	(V)	–	C	(M)	–	(S)	**	–	****	*	H	–	00
1		2	3		4	5		6	7		8	9	10		11

1 Function
SV13 - Solenoid valve

2 Size
12 - 12 size

3 Seal material
Blank - Buna-N
V - Viton®

4 Style
C - Normally closed

5 Manual override option
Blank - No manual override
M - Manual override

For valve dimensions with manual override option installed see page A-980.

6 Valve housing material
Blank - Cartridge only
A - Aluminum
S - Steel (standard)

7 Port size

Code	Port size	Housing number	
		Aluminium	Steel
0	Cartridge only		
4G	1/2" BSPP	02-161118	02-172062
4GU	1/2" BSPP	02-161116	02-172512
6G	3/4" BSPP	02-161117	02-169665
6GU	3/4" BSPP	02-161115	02-162922
10T	SAE 10	02-160640	02-169744
10TU	SAE 10	02-160641	02-169817
12T	SAE 12	02-160644	02-169782
12TU	SAE 12	02-160645	02-169790

See section J for housing details.

8 Voltage rating
00 - No coil
12D - 12VDC
24D - 24VDC
36D - 36VDC
24A - 24VAC
115A - 115VAC
230A - 230VAC
12B - 12VDC/w diode*
24B - 24VDC/w diode*
*Optional arc suppression diode.

9 Connector types
Blank - No coil
G - ISO 4400 DIN 43650
Q - Spade terminals
W - Flying lead
N - Deutsch (DC only)
Y - Amp JR (DC only)
D - Metripack 150 male (DC only)
J - Metripack 280 male (DC only)

10 Coil series
H - 10 series, 29 W

For coil part numbers and dimensions see section C.

11 Special features
00 - None

(Only required if valve has special features, omitted if "00.")

Dimensions
mm (inch)

Torque cartridge in housing
A - 81-95 Nm (60-70 ft lbs)
S - 102-115 Nm (75-85 ft lbs)

Cartridge only

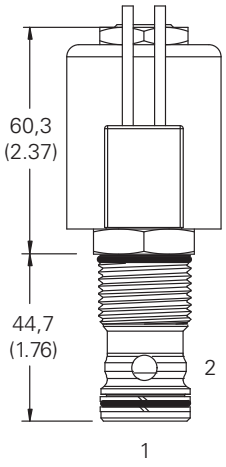

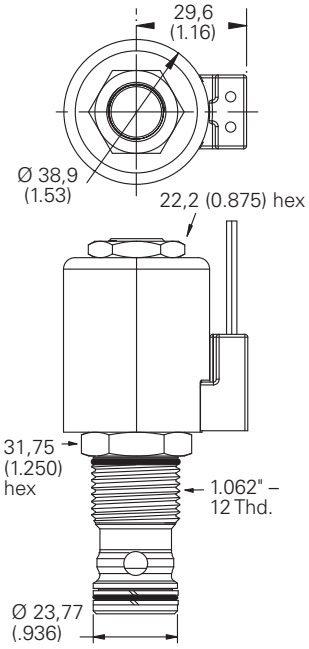

Note: When solenoid valve is ordered as cartridge only, coil nut is included.

Note: For applications above 210 bar please consult our technical department or use the steel body option.

Installation drawing (Steel)

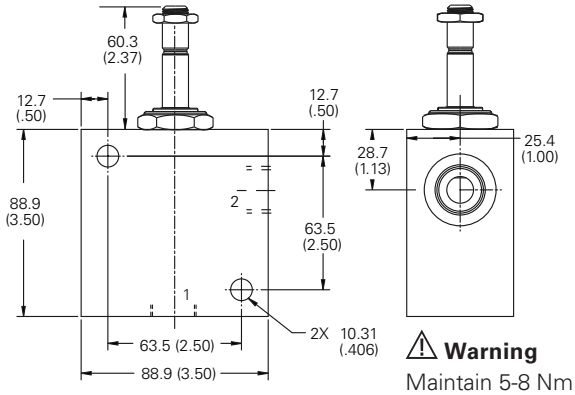

⚠ Warning
Maintain 5-8 Nm (4-6 ft lbs) maximum torque on valve tube nut.

Over tightening may cause valve failure.

Where measurements are critical request certified drawings. We reserve the right to change specifications without notice.

SBV1-12-C - Solenoid valve

2-way, 2-position, normally closed, bi-directional, poppet type solenoid valve
114 L/min (30 USgpm) • 210 bar (3000 psi)

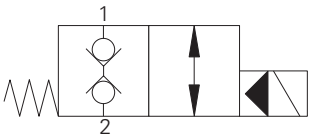

Operation

In the de-energized position the valve is blocked in both directions.

When the solenoid is energized the pilot poppet is released from the seat allowing the main poppet to open. A series of internal check valves allows full flow in both directions.

Features

Hardened and ground working parts. Lapped seat for low leakage. IP69K Tough coil compatibility. Continuously rated. Compact design with low pressure drop.

Sectional view

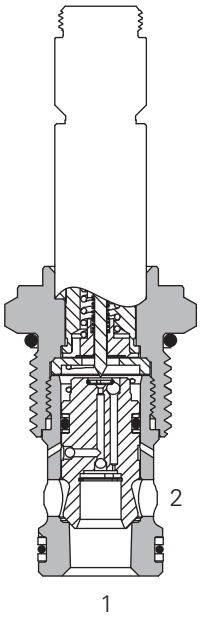

Performance data

Ratings and specifications

Performance data is typical with fluid at 21,8 cST (105 SUS) and 49°C (120°F)	
Typical application pressure (all ports)	210 bar (3000 psi)
Cartridge fatigue pressure (infinite life)	210 bar (3000 psi)
Rated flow	114 L/min (30 USgpm)
Internal leakage, port 1 to port 2 and port 2 to port 1	5 drops/min, max @ 210 bar (3000 psi)
Temperature range	-40° to 100°C (-40° to 212°F)
Coil duty	Continuous from 85% to 110% of nominal voltage
Cavity	C-12-2 or C-12-2U Add "U" after number if undercut is required. If undercut is not specified, expect 10 psi @ 15 USgpm and 20 psi @ 30 USgpm higher pressure drop.
Fluids	All general purpose hydraulic fluids such as: MIL-H-5606, SAE 10, SAE 20 etc.
Filtration	Cleanliness code 18/**16/13**
Housing material (standard)	Aluminum or steel
Weight cartridge only	0,27 kg (0.59 lbs)
Seal kit	02-165889 (Buna-N), 02-165888 (Viton®)

Viton is a registered trademark of E.I. DuPont

Description

This is a 2-way 2-position, bi-directional, pilot operated, normally closed poppet type screw in cartridge valve. The valve is ideal for isolating and holding actuators in position.

Pressure drop

Cartridge only

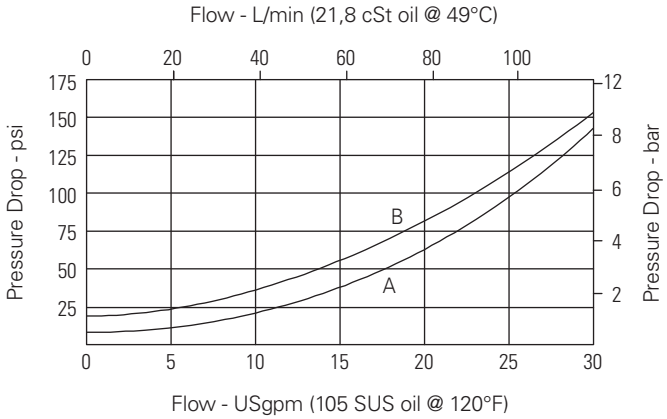

A - Port 1 to port 2
B - Port 2 to port 1

Where measurements are critical request certified drawings. We reserve the right to change specifications without notice.

SBV1-12-C - Solenoid valve

2-way, 2-position, normally closed, bi-directional, poppet type solenoid valve
114 L/min (30 USgpm) • 210 bar (3000 psi)

Model code

SBV1	–	12	(V)	–	C	–	(*)	**	–	****	*	J	–	00
1		2	3		4		5	6		7	8	9		10

1 Function
SBV1 - Solenoid bi-directional valve

2 Size
12 - 12 size

3 Seal material
Blank - Buna-N
V - Viton®

4 Style
C - Normally closed

5 Valve housing material
Blank - Cartridge only
A - Aluminum (standard)
S - Steel

6 Port size

Code	Port size	Housing number	
		Aluminium	Steel
0	Cartridge only		
4G	1/2" BSPP	02-161118	02-172062
4GU	1/2" BSPP	02-161116	02-172512
6G	3/4" BSPP	02-161117	02-169665
6GU	3/4" BSPP	02-161115	02-162922
10T	SAE 10	02-160640	02-169744
10TU	SAE 10	02-160641	02-169817
12T	SAE 12	02-160644	02-169782
12TU	SAE 12	02-160645	02-169790

See section J for housing details.

7 Voltage rating
00 - No coil
12D - 12VDC
24D - 24VDC
36D - 36VDC
24A - 24VAC
115A - 115VAC
230A - 230VAC
12B - 12VDC/w diode*
24B - 24VDC/w diode*
*Optional arc suppression diode.

8 Connector types
Blank - No coil
G - ISO 4400 DIN 43650
Q - Spade terminals
W - Flying lead
N - Deutsch (DC only)
Y - Amp JR (DC only)
D - Metripack 150 male (DC only)
J - Metripack 280 male (DC only)

9 Coil series
J - 10 series, 23 W

For coil part numbers and dimensions see section C.

10 Special features
00 - None

(Only required if valve has special features, omitted if "00.")

Torque cartridge in housing
A - 81-95 Nm (60-70 ft lbs)
S - 102-115 Nm (75-85 ft lbs)

Note: When solenoid valve is ordered as cartridge only, coil nut is included.

Dimensions
mm (inch)

Cartridge only

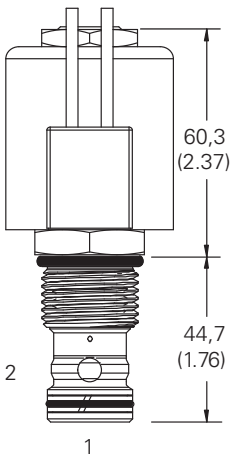

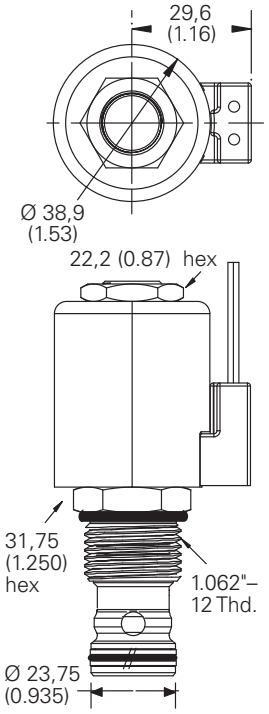

Installation drawing (Aluminum)

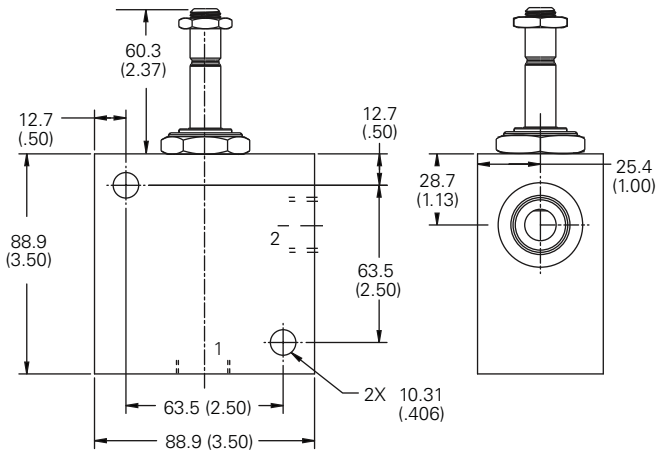

⚠ Warning
Maintain 5-8 Nm (4-6 ft lbs) maximum torque on valve tube nut.

Over tightening may cause valve failure.

⚠ Warning
Aluminum housings can be used for pressures up to 210 bar (3000 psi). Steel housings must be used for operating pressures above 210 bar (3000 psi).

Where measurements are critical request certified drawings. We reserve the right to change specifications without notice.

SBV11-12-C - Solenoid valve

2-way, 2-position, normally closed, bi-directional, poppet type solenoid valve
114 L/min (30 USgpm) • 350 bar (5000 psi)

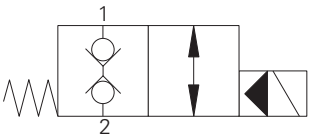

Operation

In the de-energized position the valve is blocked in both directions.

When the solenoid is energized the pilot poppet is released from the seat allowing the main poppet to open. A series of internal check valves allows full flow in both directions.

Features

Hardened and ground working parts. Lapped seat for low leakage. IP69K Tough coil compatibility. Continuously rated. Compact design with low pressure drop. 350 bar working pressure.

Sectional view

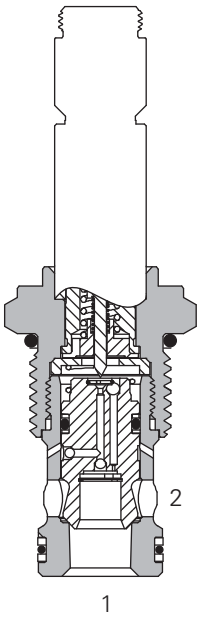

Performance data

Ratings and specifications

Performance data is typical with fluid at 21,8 cST (105 SUS) and 49°C (120°F)	
Typical application pressure (all ports)	350 bar (5000 psi)
Cartridge fatigue pressure (infinite life)	310 bar (4500 psi)
Rated flow	114 L/min (30 USgpm)
Internal leakage, port 1 to port 2 and port 2 to port 1	5 drops/min, max @ 350 bar (3000 psi)
Temperature range	-40° to 100°C (-40° to 212°F)
Coil duty	Continuous from 85% to 110% of nominal voltage
Cavity	C-12-2 or C-12-2U Add "U" after number if undercut is required. If undercut is not specified, expect 10 psi @ 15 USgpm and 20 psi @ 30 USgpm higher pressure drop.
Fluids	All general purpose hydraulic fluids such as: MIL-H-5606, SAE 10, SAE 20 etc.
Filtration	Cleanliness code 18/**16/13**
Housing material (standard)	Aluminum or steel
Weight cartridge only	0,27 kg (0.59 lbs)
Seal kit	02-165889 (Buna-N), 02-165888 (Viton®)

Viton is a registered trademark of E.I. DuPont

Description

This is a 2-way 2-position, high pressure bi-directional, pilot operated, normally closed poppet type screw in cartridge valve. The valve is ideal for isolating and holding actuators in position.

Pressure drop

Cartridge only

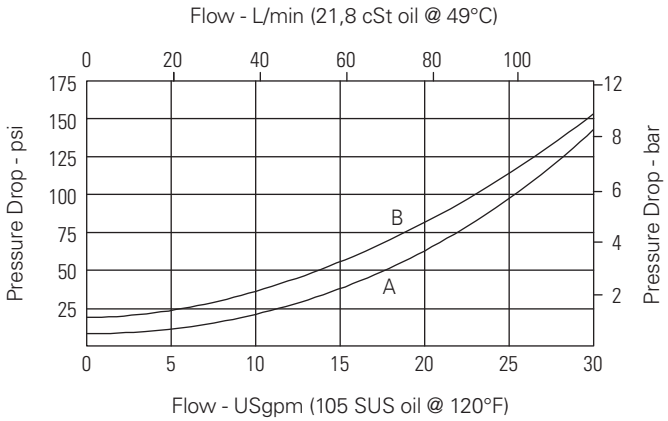

A - Port 1 to port 2
B - Port 2 to port 1

Where measurements are critical request certified drawings. We reserve the right to change specifications without notice.

SBV11-12-C - Solenoid valve

2-way, 2-position, normally closed, bi-directional, poppet type solenoid valve
114 L/min (30 USgpm) • 350 bar (5000 psi)

Model code

SBV11	–12	(V)	– C	–(*)	**	– ****	*	H	– 00
1	2	3	4	5	6	7	8	9	10

1 Function
SBV11 - Solenoid bi-directional valve

2 Size
12 - 12 size

3 Seal material
Blank - Buna-N
V - Viton®

4 Style
C - Normally closed

5 Valve housing material
Blank - Cartridge only
A - Aluminum
S - Steel

6 Port size

Code	Port size	Housing number	
		Aluminium	Steel
0	Cartridge only		
4G	1/2" BSPP	02-161118	02-172062
4GU	1/2" BSPP	02-161116	02-172512
6G	3/4" BSPP	02-161117	02-169665
6GU	3/4" BSPP	02-161115	02-162922
10T	SAE 10	02-160640	02-169744
10TU	SAE 10	02-160641	02-169817
12T	SAE 12	02-160644	02-169782
12TU	SAE 12	02-160645	02-169790

See section J for housing details.

7 Voltage rating
00 - No coil
12D - 12VDC
24D - 24VDC
36D - 36VDC
24A - 24VAC
115A - 115VAC
230A - 230VAC
12B - 12VDC/w diode*
24B - 24VDC/w diode*
*Optional arc suppression diode.

8 Connector types
Blank - No coil
G - ISO 4400 DIN 43650
Q - Spade terminals
W - Flying lead
N - Deutsch (DC only)
Y - Amp JR (DC only)
D - Metripack 150 male (DC only)
J - Metripack 280 male (DC only)

9 Coil series
H - 10 series, 29 W

For coil part numbers and dimensions see section C.

10 Special features
00 - None

(Only required if valve has special features, omitted if "00.")

Torque cartridge in housing
A - 81-95 Nm (60-70 ft lbs)
S - 102-115 Nm (75-85 ft lbs)

Note: When solenoid valve is ordered as cartridge only, coil nut is included.

Dimensions
mm (inch)

Cartridge only

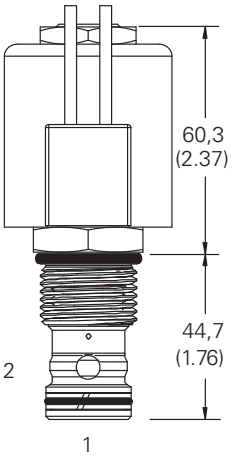

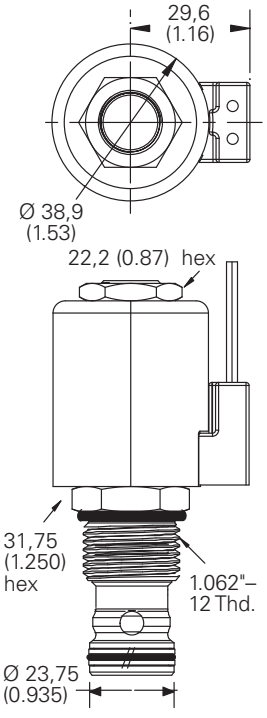

Installation drawing (Steel)

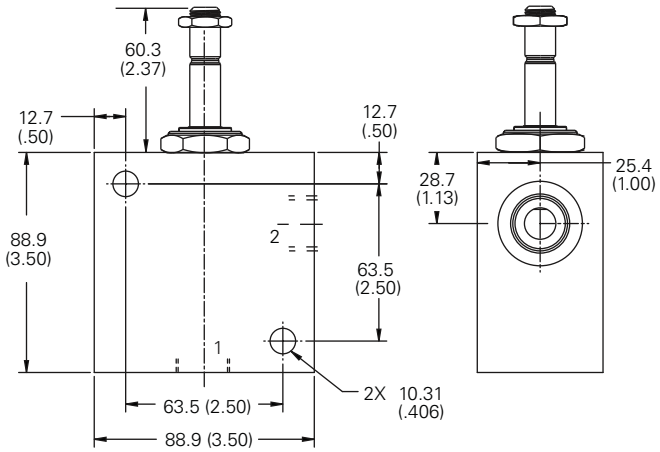

⚠ Warning
Maintain 5-8 Nm (4-6 ft lbs) maximum torque on valve tube nut.

Over tightening may cause valve failure.

⚠ Warning
Aluminum housings can be used for pressures up to 210 bar (3000 psi). Steel housings must be used for operating pressures above 210 bar (3000 psi).

Where measurements are critical request certified drawings. We reserve the right to change specifications without notice.

SV1-16-C/CM/CR - Solenoid valve

2-way, 2-position, normally closed, poppet type solenoid valve
132 L/min (35 USgpm) • 210 bar (3000 psi)

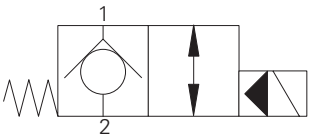

Operation

In the de-energized position the valve blocks flow from port 2 to 1 and free flow is allowed from port 1 to 2.

When the solenoid is energized the pilot poppet is pulled off the seat allowing the valve to open in both directions.

Features

Hardened and ground working parts. Lapped seat for low leakage. IP69K Tough coil compatibility. Continuously rated. Compact design with low pressure drop.

Sectional view

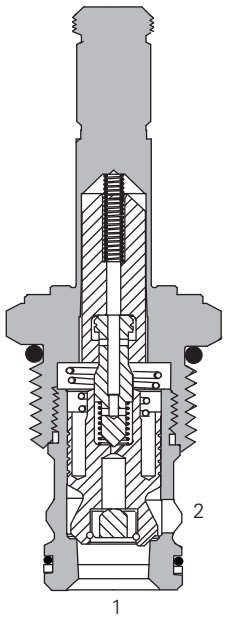

Performance data

Ratings and specifications

Performance data is typical with fluid at 21,8 cST (105 SUS) and 49°C (120°F)	
Typical application pressure (all ports)	210 bar (3000 psi)
Cartridge fatigue pressure (infinite life)	210 bar (3000 psi)
Rated flow	132 L/min (35 USgpm)
Internal leakage, port 2 to port 1	less than 5 drops/min, max @ 210 bar (3000 psi)
Temperature range	-40° to 120°C (-40° to 248°F)
Coil duty	Continuous from 85% to 110% of nominal voltage
Cavity	C-16-2
Fluids	All general purpose hydraulic fluids such as: MIL-H-5606, SAE 10, SAE 20 etc.
Filtration	Cleanliness code 18/**16/13**
Housing material (standard)	Aluminum
Weight including coil	1,15 kg (2.53 lbs)
Seal kit	565810 (Buna-N), 02-889609 (Viton®)

Viton is a registered trademark of E.I. DuPont

Description

This is a 2-way, 2-position, poppet type, pilot operated, normally closed solenoid valve. This valve is used in applications requiring low leakage, such as load holding applications or as a general purpose diverter or dump valve.

Pressure drop

Cartridge only

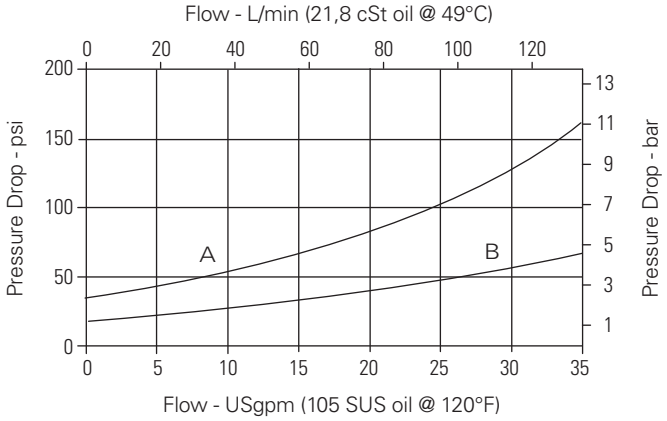

A - Port 2 to port 1 energized
B - Port 1 to port 2 de-energized

Where measurements are critical request certified drawings. We reserve the right to change specifications without notice.

SV1-16-C/CM/CR - Solenoid valve

2-way, 2-position, normally closed, poppet type solenoid valve
132 L/min (35 USgpm) • 210 bar (3000 psi)

Model code

SV1 – 16 (V) – C (*) – * – **** * – 00**

1 2 3 4 5 6 7 8 9

1 Function
SV1 - Solenoid valve

2 Size
16 - 16 size

3 Seal material
Blank - Buna-N
V - Viton®

4 Style
C - Normally closed

5 Manual override option
Blank - No manual override
M - Knob type
R - Cable type

For valve dimensions with manual override option installed see page A-980.

6 Port size

Code	Port size	Housing number
0	Cartridge only	
6B	3/4" BSPP	02-175463*
12T	SAE 12	566149*
6G	3/4" BSPP	876717
10H	SAE 10	876717
12H	SAE 12	566113

See section J for housing details.
*Light duty housing

7 Voltage rating
00 - No coil
12D - 12VDC
24D - 24VDC
36D - 36VDC
24A - 24VAC
115A - 115VAC
230A - 230VAC
12B - 12VDC/w diode*
24B - 24VDC/w diode*

*Optional arc suppression diode.

8 Connector types
Blank - No coil
G - ISO 4400 DIN 43650
Q - Spade terminals
W - Flying lead
N - Deutsch (DC only)
Y - Amp JR (DC only)
D - Metripack 150 male (DC only)
J - Metripack 280 male (DC only)

For coil part numbers and dimensions see section C.

9 Special features
00 - None

(Only required if valve has special features, omitted if "00.")

Dimensions
mm (inch)

Cartridge only

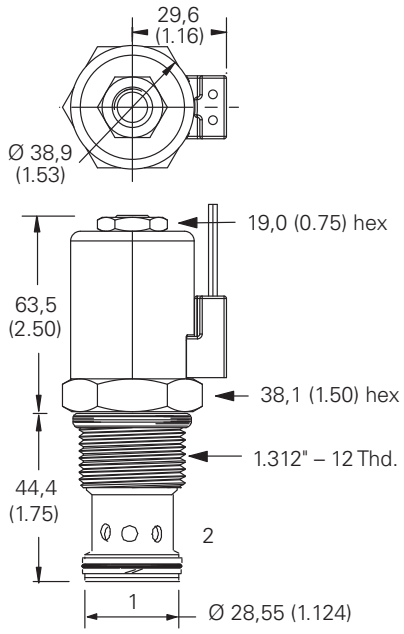

Torque cartridge in aluminum housing 108-122 Nm (80-90 ft lbs)

Note: When solenoid valve is ordered as cartridge only, coil nut is included.

Notes: Use J series, 23 W coils with this solenoid valve.

Installation drawings

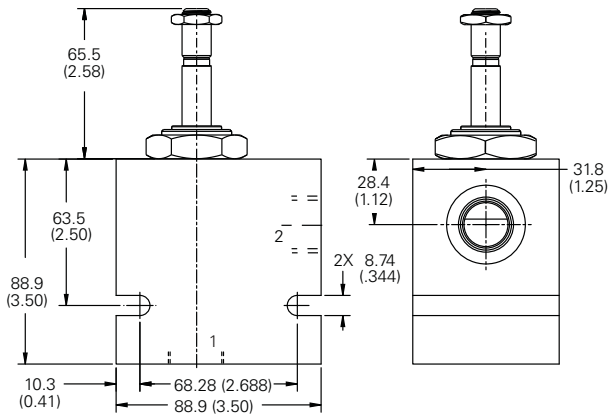

⚠ Warning
Maintain 5-8 Nm (4-6 ft lbs) maximum torque on valve tube nut.

Over tightening may cause valve failure.

Where measurements are critical request certified drawings. We reserve the right to change specifications without notice.

SV13-16-C/CM - Solenoid valve

Poppet type, normally closed solenoid valve, (free reverse flow)
132 L/min (35 USgpm) • 350 bar (5000 psi)

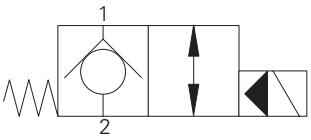

Operation

In the de-energized position the valve blocks flow from port 2 to 1 and free flow is allowed from port 1 to 2.

When the solenoid is energized the pilot poppet is pulled off the seat allowing the valve to open in both directions.

Features

Hardened and ground working parts. Lapped seat for low leakage. IP69K Tough coil compatibility. Continuously rated. Compact design with low pressure drop. 350 bar working pressure.

Sectional view

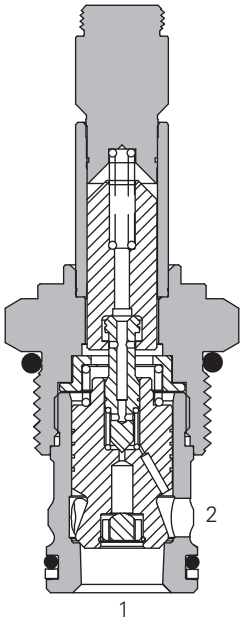

Performance data

Ratings and specifications

Performance data is typical with fluid at 21,8 cST (105 SUS) and 49°C (120°F)	
Typical application pressure (all ports)	350 bar (5000 psi)
Cartridge fatigue pressure (infinite life)	310 bar (4500 psi)
Rated flow	132 L/min (35 USgpm)
Internal leakage	less than 5 drops/min, max @ 350 bar (5000 psi)
Temperature range	-40° to 100°C (-40° to 212°F)
Coil duty	Continuous from 85% to 110% of nominal voltage
Cavity	C-16-2
Fluids	All general purpose hydraulic fluids such as: MIL-H-5606, SAE 10, SAE 20 etc
Filtration	Cleanliness code 18/**16/13**
Housing material (standard)	Steel
Weight cartridge only	0,39 kg (0.85 lbs)
Seal kit	565810 (Buna-N), 889609 (Viton®)

Viton is a registered trademark of E.I. DuPont

Description

This is a 2-way, 2-position, poppet type, high pressure, pilot operated, normally closed solenoid valve. This valve is used in applications requiring low leakage, such as load holding applications or as a general purpose diverter or dump valve.

Pressure drop

Cartridge only

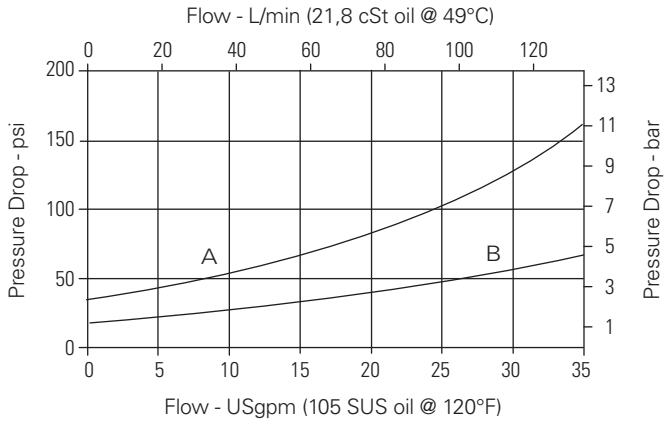

A - Port 2 to port 1 energized
B - Port 1 to port 2 de-energized

Where measurements are critical request certified drawings. We reserve the right to change specifications without notice.

SV13-16-C/CM - Solenoid valve

Poppet type, normally closed solenoid valve, (free reverse flow)
132 L/min (35 USgpm) • 350 bar (5000 psi)

Model code

SV13	–	16	(V)	–	C	(M)	–	(S)	**	–	****	*	H	–	00
1		2	3		4	5		6	7		8	9	10		11

1 Function
SV13 - Solenoid valve

2 Size
16 - 16 size

3 Seal material
Blank - Buna-N
V - Viton®

4 Style
C - Normally closed

5 Manual override option
Blank - No manual override
M - Manual override

For valve dimensions with manual override option installed see page A-980.

6 Valve housing material
Blank - Cartridge only
S - Steel

7 Port size

Code	Port size	Housing number
0	Cartridge only	
4G	1/2" BSPP	02-175106
6G	3/4" BSPP	02-175107
10T	SAE 10	02-175104
12T	SAE 12	02-175105

See section J for housing details.

8 Voltage rating
00 - No coil
12D - 12VDC
24D - 24VDC
36D - 36VDC
24A - 24VAC
115A - 115VAC
230A - 230VAC
12B - 12VDC/w diode*
24B - 24VDC/w diode*

*Optional arc suppression diode.

9 Connector types
Blank - No coil
G - ISO 4400 DIN 43650
Q - Spade terminals
W - Flying lead
N - Deutsch (DC only)
Y - Amp JR (DC only)
D - Metripack 150 male (DC only)
J - Metripack 280 male (DC only)

10 Coil series
H - 10 Series, 29 W

For coil part numbers and dimensions see section C.

11 Special features
00 - None

(Only required if valve has special features, omitted if "00".)

Dimensions
mm (inch)

Torque cartridge in steel housing 136-149 Nm (100-110 ft lbs)

Note: When solenoid valve is ordered as cartridge only, coil nut is included.

Cartridge only

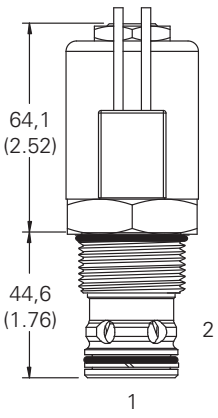

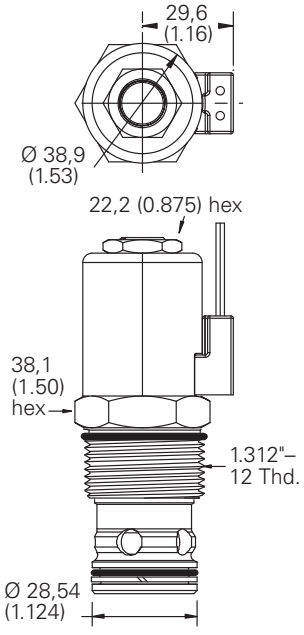

Installation drawing

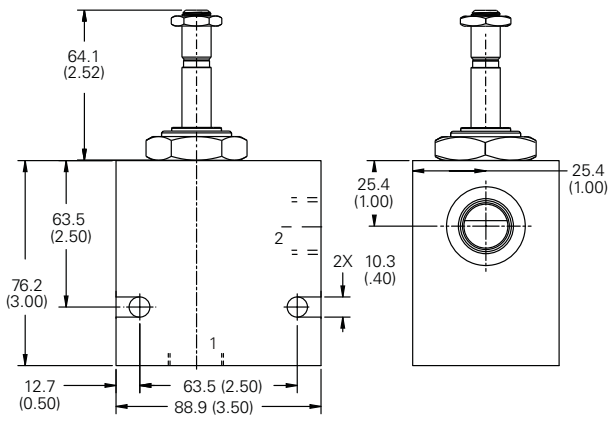

⚠ Warning
Maintain 5-8 Nm (4-6 ft lbs) maximum torque on valve tube nut.

Over tightening may cause valve failure.

Where measurements are critical request certified drawings. We reserve the right to change specifications without notice.

SV2-20-C/CM/CR - Solenoid valve

Poppet type, normally closed solenoid valve (free reverse flow)
227 L/min (60 USgpm) • 210 bar (3000 psi)

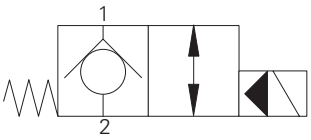

Operation

In the de-energized position the valve blocks flow from port 2 to 1 and free flow is allowed from port 1 to 2.

When the solenoid is energized the pilot poppet is pulled off the seat allowing the valve to open in both directions.

Features

Hardened and ground working parts. Lapped seat for low leakage. IP69K Tough coil compatibility. Continuously rated. Compact design with low pressure drop.

Sectional view

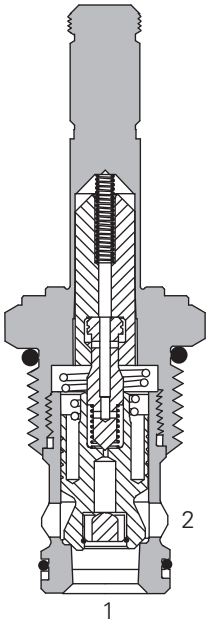

Performance data

Ratings and specifications

Performance data is typical with fluid at 21,8 cST (105 SUS) and 49°C (120°F)	
Typical application pressure (all ports)	210 bar (3000 psi)
Cartridge fatigue pressure (infinite life)	210 bar (3000 psi)
Rated flow	227 L/min (60 USgpm)
Internal leakage, port 2 to port 1	less than 5 drops/min, max @ 210 bar (3000 psi)
Temperature range	-40° to 120°C (-40° to 248°F)
Coil duty	Continuous from 85% to 110% of nominal voltage
Cavity	C-20-2
Fluids	All general purpose hydraulic fluids such as: MIL-H-5606, SAE 10, SAE 20 etc.
Filtration	Cleanliness code 18/**16/13**
Housing material (standard)	Aluminum
Weight including coil	1,2 kg (2.70 lbs)
Seal kit	889615 (Buna-N), 889619 (Viton®)

Viton is a registered trademark of E.I. DuPont

Description

This is a 2-way, 2-position, poppet type, pilot operated, normally closed solenoid valve. This valve is used in applications requiring low leakage, such as load holding applications or as a general purpose diverter or dump valve.

Pressure drop

Cartridge only

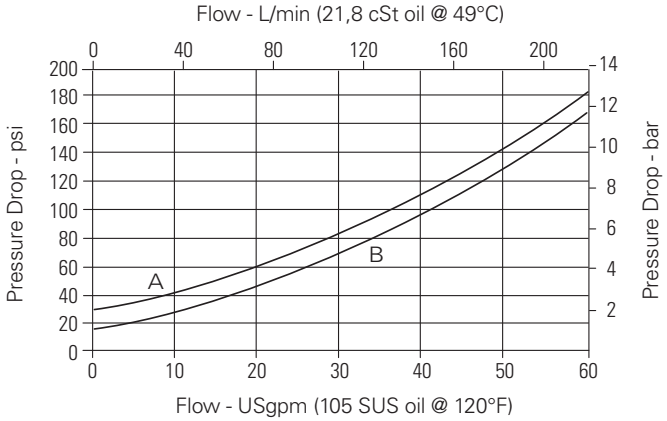

A - Port 1 to port 2 de-energized
B - Port 2 to port 1 energized

Where measurements are critical request certified drawings. We reserve the right to change specifications without notice.

SV2-20-C/CM/CR - Solenoid valve

Poppet type, normally closed solenoid valve (free reverse flow)
227 L/min (60 USgpm) • 210 bar (3000 psi)

Model code

SV2 – 20 (V) – C (*) – * – **** * – 00**

1 2 3 4 5 6 7 8 9

1 Function
SV2 - Solenoid valve

2 Size
20 - 20 size

3 Seal material
Blank - Buna-N
V - Viton®

4 Style
C - Normally closed

5 Manual override option
Blank - No manual override
M - Knob type
R - Cable type

For valve dimensions with manual override option installed see page A-980.

6 Port size

Code	Port size	Housing number
0	Cartridge only	
8B	1" BSPP	02-175464*
16T	SAE 16	566409*
6G	3/4" BSPP	876732
8G	1" BSPP	876734
12H	SAE 12	876733
16H	SAE 16	876735

*Light duty housing.
See section J for housing details.

7 Voltage rating
00 - No coil
12D - 12VDC
24D - 24VDC
36D - 36VDC
24A - 24VAC
115A - 115VAC
230A - 230VAC
12B - 12VDC/w diode*
24B - 24VDC/w diode*

*Optional arc suppression diode.

8 Connector types
Blank - No coil
G - ISO 4400 DIN 43650
Q - Spade terminals
W - Flying lead
N - Deutsch (DC only)
Y - Amp JR (DC only)
D - Metripack 150 male (DC only)
J - Metripack 280 male (DC only)

For coil part numbers and dimensions see section C.

9 Special features
00 - None

(Only required if valve has special features, omitted if "00".)

Dimensions
mm (inch)

Cartridge only

Torque cartridge in aluminum housing
128-155 Nm (95-115 ft lbs)

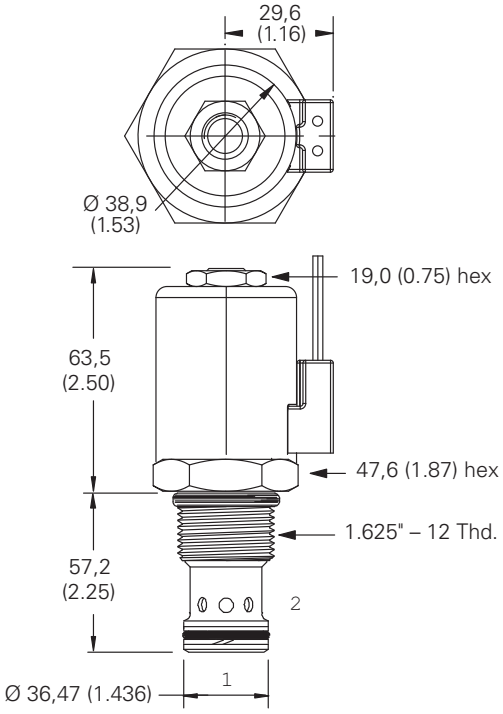

Note: When solenoid valve is ordered as cartridge only, coil nut is included.

Installation drawing

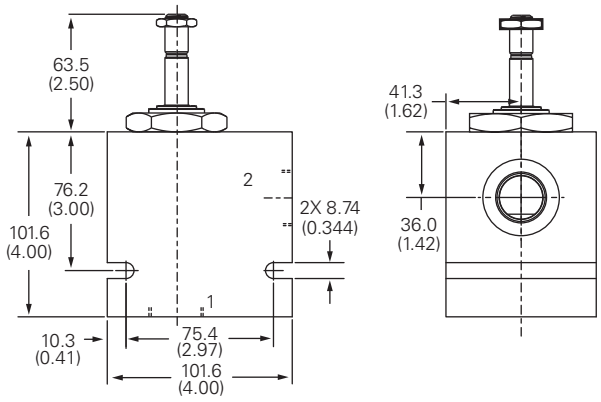

Note: Use J series, 23 W coils with this solenoid valve.

⚠ Warning
Maintain 5-8 Nm
(4-6 ft lbs) maximum torque on valve tube nut.

Over tightening may cause valve failure.

Where measurements are critical request certified drawings. We reserve the right to change specifications without notice.

SV13-20-C/CM - Solenoid valve

Poppet type, pilot operated solenoid valve
227 L/min (60 USgpm) • 350 bar (5000 psi)

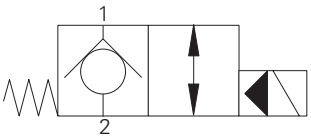

Operation

In the de-energized position the valve blocks flow from port 2 to 1 and free flow is allowed from port 1 to 2.

When the solenoid is energized the pilot poppet is pulled off the seat allowing the valve to open in both directions.

Features

Hardened and ground working parts. Lapped seat for low leakage. IP69K Tough coil compatibility. Continuously rated. Compact design with low pressure drop. 350 bar working pressure.

Sectional view

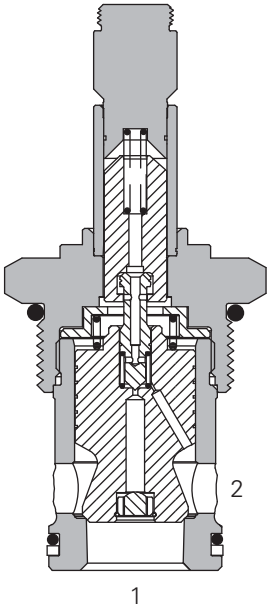

Performance data

Ratings and specifications

Performance data is typical with fluid at 21,8 cST (105 SUS) and 49°C (120°F)	
Typical application pressure (all ports)	350 bar (5000 psi)
Cartridge fatigue pressure (infinite life)	310 bar (4500 psi)
Rated flow	227 L/min (60 USgpm)
Internal leakage	less than 5 drops/min, max @ 350 bar (5000 psi)
Temperature range	-40° to 100°C (-40° to 212°F)
Coil duty	Continuous from 85% to 110% of nominal voltage
Cavity	C-20-2
Fluids	All general purpose hydraulic fluids such as: MIL-H-5606, SAE 10, SAE 20 etc
Filtration	Cleanliness code 18/**16/13**
Housing material (standard)	Steel
Weight cartridge only	0,62 kg (1.37 lbs)
Seal kit	889615 (Buna-N), 889619 (Viton®)

Viton is a registered trademark of E.I. DuPont

Description

This is a 2-way, 2-position, poppet type, high pressure, pilot operated, normally closed solenoid valve. This valve is used in applications requiring low leakage, such as load holding applications or as a general purpose diverter or dump valve.

Pressure drop

Cartridge only

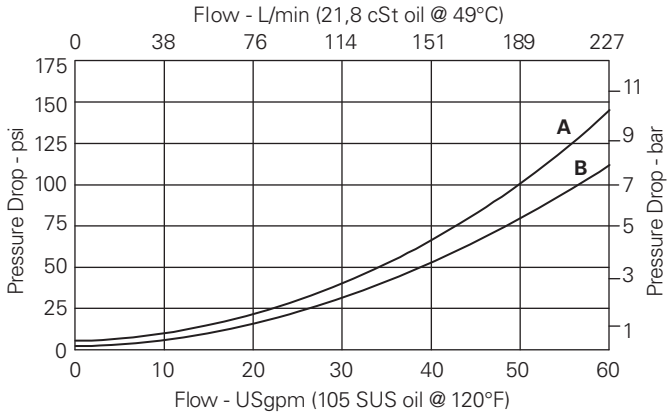

A - Port 2 to port 1 energized
B - Port 1 to port 2 de-energized

Where measurements are critical request certified drawings. We reserve the right to change specifications without notice.

SV13-20-C/CM - Solenoid valve

Poppet type, pilot operated solenoid valve
227 L/min (60 USgpm) • 350 bar (5000 psi)

Model code

SV13	–	20	(V)	–	C	(M)	–	(S)	**	–	****	*	H	–	00
1		2	3		4	5		6	7		8	9	10		11

1 Function
SV13 - Solenoid valve

2 Size
20 - 20 size

3 Seal material
Blank - Buna-N
V - Viton®

4 Style
C - Normally closed

5 Manual override option
Blank - No manual override
M - Manual override

For valve dimensions with manual override option installed see page A-980.

6 Valve housing material
Blank - Cartridge only
S - Steel

7 Port size

Code	Port size	Housing number
0	Cartridge only	
6G	3/4" BSPP	02-175110
8G	1" BSPP	02-175111
12T	SAE 12	02-175108
16T	SAE 16	02-175109

See section J for housing details.

8 Voltage rating
00 - No coil
12D - 12VDC
24D - 24VDC
36D - 36VDC
24A - 24VAC
115A - 115VAC
230A - 230VAC
12B - 12VDC/w diode*
24B - 24VDC/w diode*

*Optional arc suppression diode.

9 Connector types
Blank - No coil
G - ISO 4400 DIN 43650
Q - Spade terminals
W - Flying lead
N - Deutsch (DC only)
Y - Amp JR (DC only)
D - Metripack 150 male (DC only)
J - Metripack 280 male (DC only)

10 Coil series
H - 10 Series, 29 W

For coil part numbers and dimensions see section C.

11 Special features
00 - None

(Only required if valve has special features, omitted if "00".)

Dimensions
mm (inch)

Torque cartridge in steel housing 163-183 Nm (120-135 ft lbs)

Note: When solenoid valve is ordered as cartridge only, coil nut is included.

Cartridge only

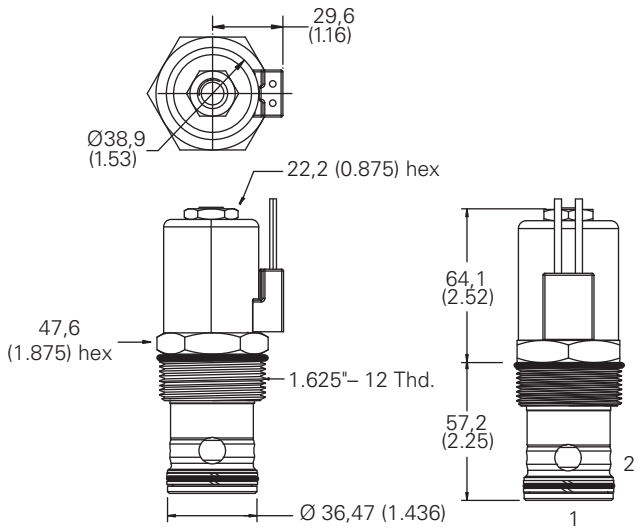

⚠ Warning
Maintain 5-8 Nm (4-6 ft lbs) maximum torque on valve tube nut.

Over tightening may cause valve failure.

Where measurements are critical request certified drawings. We reserve the right to change specifications without notice.

SV4-8-C/CM - Solenoid valve

Spool type, normally closed solenoid valve
11 L/min (3 USgpm) • 210 bar (3000 psi)

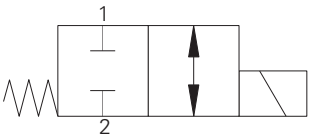

Operation

In the de-energized position the valve blocks flow in both directions.

When the solenoid is energized the spool moves allowing the valve to open in both directions.

Features

Hardened, ground and honed working parts to limit leakage. IP69 Tough coil compatibility. Continuously rated. Compact design with low pressure drop.

Sectional view

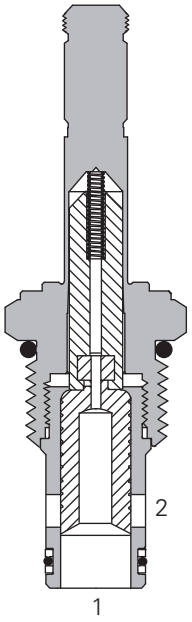

Description

This is a 2-way, 2-position, spool type, direct acting, normally closed solenoid valve. This valve is used in applications where the flow needs to be blocked in both directions when the solenoid is de-energized.

Performance data

Ratings and specifications

Performance data is typical with fluid at 21,8 cST (105 SUS) and 49°C (120°F)	
Typical application pressure (all ports)	210 bar (3000 psi)
Cartridge fatigue pressure (infinite life)	210 bar (3000 psi)
Rated flow	11 L/min (3 USgpm)
Internal leakage	82 cm^3/min (5 in^3/min) max @ 210 bar (3000 psi)
Temperature range	-40° to 120°C (-40° to 248°F)
Coil duty	Continuous from 85% to 110% of nominal voltage
Response times (100% rated voltage and flow)	Energize: 27 ms. De-Energize: 24 ms
Cavity	C-8-2
Fluids	All general purpose hydraulic fluids such as: MIL-H-5606, SAE 10, SAE 20 etc
Filtration	Cleanliness code 18/**16/13**
Housing material (standard)	Aluminum
Weight including coil	0,27 kg (0.60 lbs)
Seal kit	02-160777 (Buna-N), 02-160778 (Viton®)

Viton is a registered trademark of E.I. DuPont

Pressure drop

Cartridge only

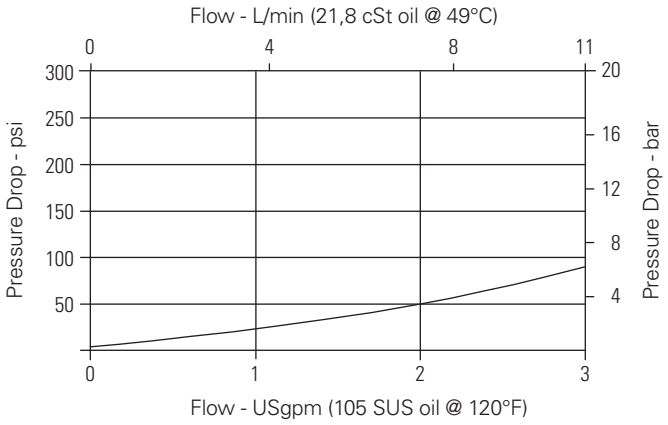

Port 1 to port 2 or port 2 to port 1 energized

Where measurements are critical request certified drawings. We reserve the right to change specifications without notice.

SV4-8-C/CM - Solenoid valve

Spool type, normally closed solenoid valve
11 L/min (3 USgpm) • 210 bar (3000 psi)

Model code

SV4	–	8	(V)	–	C	(M)	(F)	–	(A)	**	–	****	*	S	–	00
1		2	3		4	5	6		7	8		9	10	11		12

1 Function
SV4 - Solenoid valve

2 Size
8 - 8 size

3 Seal material
Blank - Buna-N
V - Viton®

4 Style
C - Normally closed

5 Manual override option
Blank - No manual override
M - Knob type

For valve dimensions with manual override option installed see page A-980.

6 Filter option
Blank - None
F - Filter screen

7 Valve housing material
Omit for cartridge only
A - Aluminum

8 Port size

Code	Port size	Housing number
0	Cartridge only	
2G	1/4" BSPP	02-160727
3G	3/8" BSPP	02-160728
4T	SAE 4	02-160730
6T	SAE 6	02-160731
8T	SAE 8	02-160732

See section J for housing details.

9 Voltage rating
00 - No coil
12D - 12VDC
24D - 24VDC
36D - 36VDC
24A - 24VAC
115A - 115VAC
230A - 230VAC
12B - 12VDC/w diode*
24B - 24VDC/w diode*

*Optional arc suppression diode.

10 Connector types
Blank - No coil
G - ISO 4400 DIN 43650
Q - Spade terminals
W - Flying lead
N - Deutsch (DC only)
Y - Amp JR (DC only)
D - Metripack 150 male (DC only)
J - Metripack 280 male (DC only)

11 Coil series
S - 8 series, 20 W

For coil part numbers and dimensions see section C.

12 Special features
00 - None

(Only required if valve has special features, omitted if "00".)

Dimensions
mm (inch)

Cartridge only

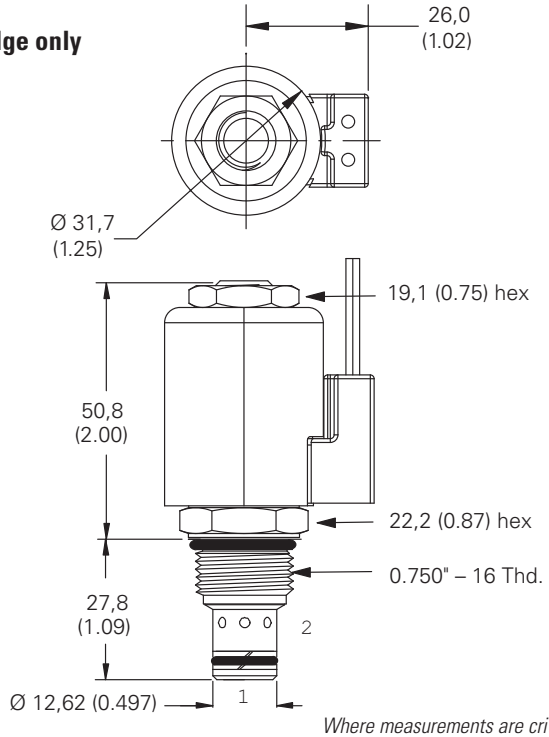

Installation drawing

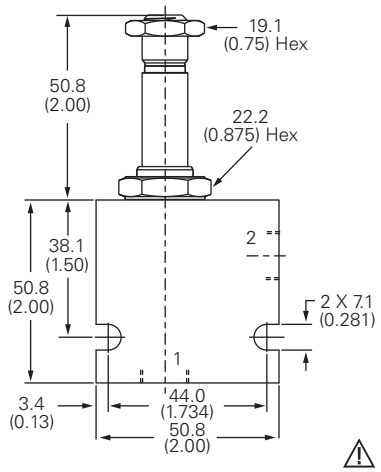

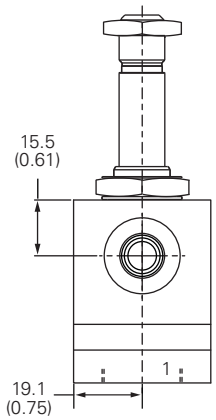

Torque cartridge in aluminum housing
34-41 Nm (25-30 ft lbs)

Note: When solenoid valve is ordered as cartridge only, coil nut is included.

⚠ Warning
Maintain 5-8 Nm (4-6 ft lbs) maximum torque on valve tube nut.

Over tightening may cause valve failure.

Where measurements are critical request certified drawings. We reserve the right to change specifications without notice.

SV14-8-C/CM - Solenoid valve

Spool type, normally closed solenoid valve, 350 bar
11 L/min (3 USgpm) • 350 bar (5000 psi)

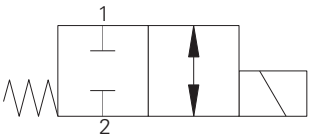

Operation

In the de-energized position the valve blocks flow in both directions.

When the solenoid is energized the spool moves allowing the valve to open in both directions.

Features

Hardened, ground and honed working parts to limit leakage. IP69 Tough coil compatibility. Continuously rated. Compact design with low pressure drop. 350 bar working pressure.

Sectional view

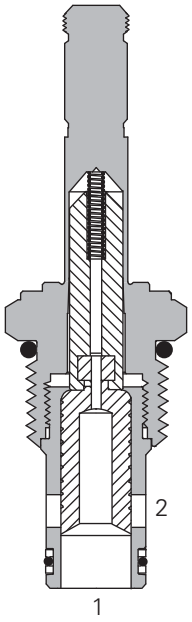

Performance data

Ratings and specifications

Performance data is typical with fluid at 21,8 cST (105 SUS) and 49°C (120°F)	
Typical application pressure (all ports)	350 bar (5000 psi)
Cartridge fatigue pressure (infinite life)	310 bar (4500 psi)
Rated flow	11 L/min (3 USgpm)
Internal leakage, port 2 to port 1	140cm³ (8.5in³/min) max @ 350 bar (5000 psi)
Temperature range	-40° to 100°C (-40° to 212°F)
Coil duty	Continuous from 85% to 110% of nominal voltage
Cavity	C-8-2
Fluids	All general purpose hydraulic fluids such as: MIL-H-5606, SAE 10, SAE 20 etc
Filtration	Cleanliness code 18/**16/13**
Housing material (standard)	Steel
Weight cartridge only	0,11 kg (.25 lbs)
Seal kit	02-160777 (Buna-N), 02-160778 (Viton®)

Viton is a registered trademark of E.I. DuPont

Description

This is a 2-way, 2-position, spool type, high pressure, direct acting, normally closed solenoid valve. This valve is used in applications where the flow needs to be blocked in both directions when the solenoid is de-energized.

Pressure drop

Cartridge only

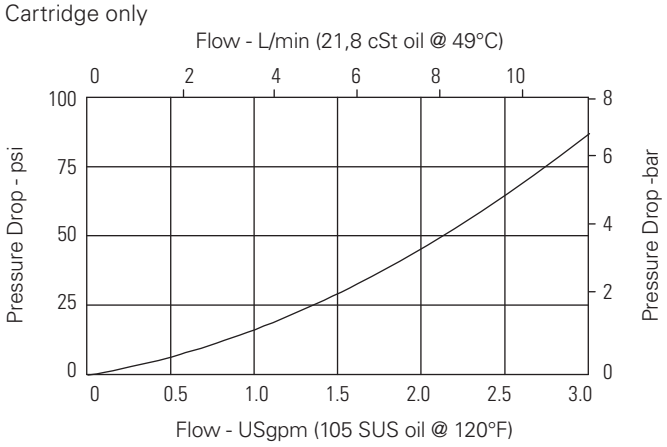

Port 1 to port 2 or port 2 to port 1 energized

Where measurements are critical request certified drawings. We reserve the right to change specifications without notice.

SV14-8-C/CM - Solenoid valve

Spool type, normally closed solenoid valve, 350 bar
11 L/min (3 USgpm) • 350 bar (5000 psi)

Model code

SV14	–	8	(V)	–	C	(M)	–	(S)	**	–	****	*	P	–	00
1		2	3		4	5		6	7		8	9	10		11

1 Function
SV14 - Solenoid valve

2 Size
8 - 8 size

3 Seal material
Blank - Buna-N
V - Viton®

4 Style
C - Normally closed

5 Manual override option
Blank - No manual override
M - Manual override

For valve dimensions with manual override option installed see page A-980.

6 Valve housing material
Blank - Cartridge only
S - Steel

7 Port size

Code	Port size	Housing number
0	Cartridge only	
2G	1/4" BSPP	02-160733
3G	3/8" BSPP	02-160734
4T	SAE 4	02-160736
6T	SAE 6	02-160737
8T	SAE 8	02-160738

See section J for housing details.

8 Voltage rating
00 - No coil
12D - 12VDC
24D - 24VDC
36D - 36VDC
24A - 24VAC
115A - 115VAC
230A - 230VAC
12B - 12VDC/w diode*
24B - 24VDC/w diode*

*Optional arc suppression diode.

9 Connector types
Blank - No coil
G - ISO 4400 DIN 43650
Q - Spade terminals
W - Flying lead
N - Deutsch (DC only)
Y - Amp JR (DC only)
D - Metripack 150 male (DC only)
J - Metripack 280 male (DC only)

10 Coil series
P - 8 series, 23 W

For coil part numbers and dimensions see section C.

11 Special features
00 - None

(Only required if valve has special features, omitted if "00".)

Dimensions
mm (inch)

Cartridge only

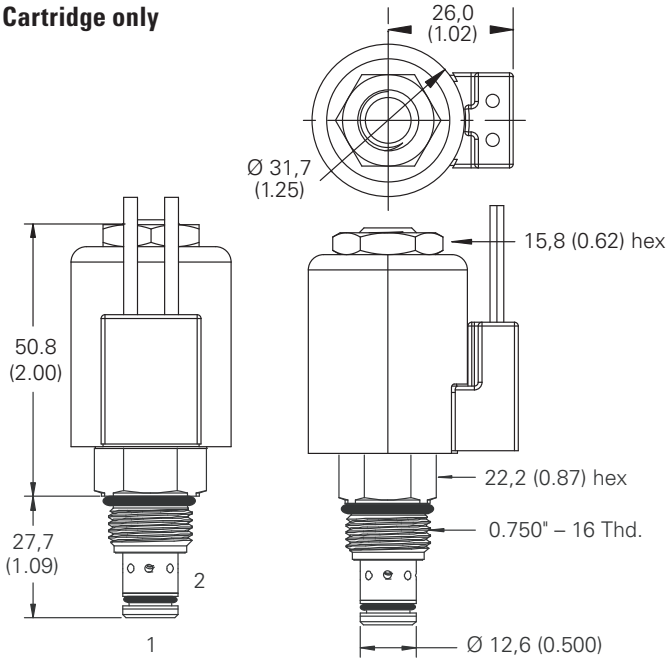

Torque cartridge in steel housing
34-41 Nm (25-30 ft lbs)

Installation drawing

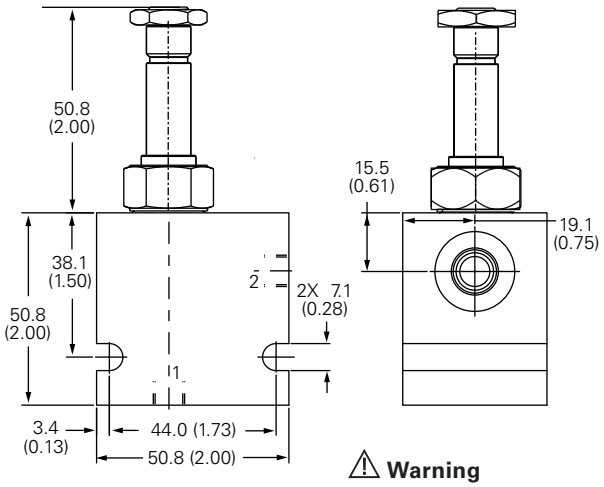

Note: When solenoid valve is ordered as cartridge only, coil nut is included.

⚠ Warning
Maintain 5-8 Nm (4-6 ft lbs) maximum torque on valve tube nut.

Over tightening may cause valve failure.

Where measurements are critical request certified drawings. We reserve the right to change specifications without notice.

SV4-10-C/CM/CR - Solenoid valve

Spool type, normally closed solenoid valve
23 L/min (6 USgpm) • 210 bar (3000 psi)

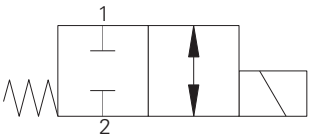

Operation

In the de-energized position the valve blocks flow in both directions.

When the solenoid is energized the spool moves allowing the valve to open in both directions.

Features

Hardened, ground and honed working parts to limit leakage. IP69 Tough coil compatibility. Continuously rated. Compact design with low pressure drop.

Sectional view

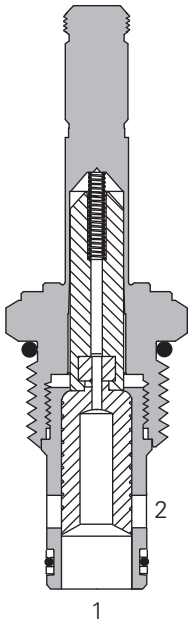

Performance data

Ratings and specifications

Performance data is typical with fluid at 21,8 cST (105 SUS) and 49°C (120°F)	
Typical application pressure (all ports)	210 bar (3000 psi)
Cartridge fatigue pressure (infinite life)	210 bar (3000 psi)
Rated flow	23 L/min (6 USgpm)
Internal leakage	82 cm^3/min (5 in^3/min) max @ 210 bar (3000 psi)
Temperature range	-40° to 120°C (-40° to 248°F)
Coil duty	Continuous from 85% to 110% of nominal voltage
Cavity	C-10-2
Fluids	All general purpose hydraulic fluids such as: MIL-H-5606, SAE 10, SAE 20 etc.
Filtration	Cleanliness code 18/**16/13**
Housing material (standard)	Aluminum
Weight including coil	0,4 kg (0.087 lbs)
Seal kit	565806 (Buna-N), 889627 (Viton®)

Viton is a registered trademark of E.I. DuPont

Description

This is a 2-way, 2-position, spool type, direct acting, normally closed solenoid valve. This valve is used in applications where the flow needs to be blocked in both directions when the solenoid is de-energized.

Pressure drop

Cartridge only

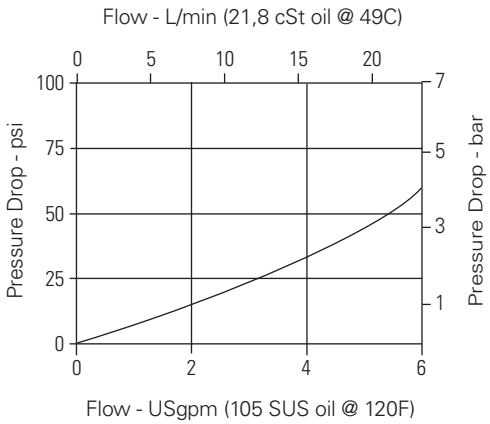

Pressure drop vs. Flow

Port 1 to port 2 or
port 2 to port 1 energized

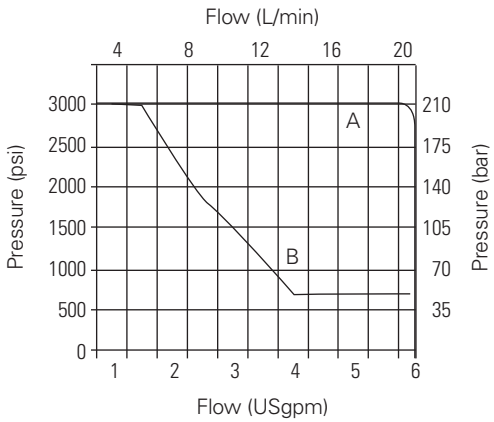

Operating Limits

A - Port 2 to port 1
B - Port 1 to port 2

Where measurements are critical request certified drawings. We reserve the right to change specifications without notice.

SV4-10-C/CM/CR - Solenoid valve

Spool type, normally closed solenoid valve
23 L/min (6 USgpm) • 210 bar (3000 psi)

Model code

SV4 – 10 (V) – C (*) (F) – ** – ** * – 00**

1 2 3 4 5 6 7 8 9 10

1 Function
SV4 - Solenoid valve

2 Size
10 - 10 size

3 Seal material
Blank - Buna-N
V - Viton®

4 Style
C - Normally closed

5 Manual override option
Blank - No manual override
M - Knob type
R - Cable type

For valve dimensions with manual override option installed see page A-980.

6 Filter option
Blank - None
F - Filter screen

7 Port size

Code	Port size	Housing number
0	Cartridge only	
3B	3/8" BSPP	02-175464*
6T	SAE 6	566151*
2G	1/4" BSPP	876702
3G	3/8" BSPP	876703
6H	SAE 6	876700
8H	SAE 8	876701

*Light duty housing.
See section J for housing details.

8 Voltage rating
00 - No coil
12D - 12VDC
24D - 24VDC
36D - 36VDC
24A - 24VAC
115A - 115VAC
230A - 230VAC
12B - 12VDC/w diode*
24B - 24VDC/w diode*

*Optional arc suppression diode.

9 Connector types
Blank - No coil
G - ISO 4400 DIN 43650
Q - Spade terminals
W - Flying lead
N - Deutsch (DC only)
Y - Amp JR (DC only)
D - Metripack 150 male (DC only)
J - Metripack 280 male (DC only)

For coil part numbers and dimensions see section C.

10 Special features
00 - None
(Only required if valve has special features, omitted if "00".)
Note: Use J series, 23 W coils with this solenoid valve.

Dimensions
mm (inch)

Cartridge only

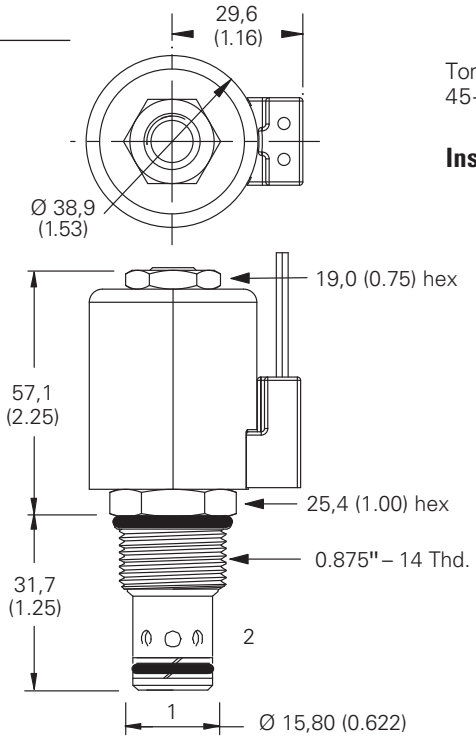

Torque cartridge in steel housing
45-54 Nm (35-40 ft lbs)

Note: When solenoid valve is ordered as cartridge only, coil nut is included.

Installation drawing

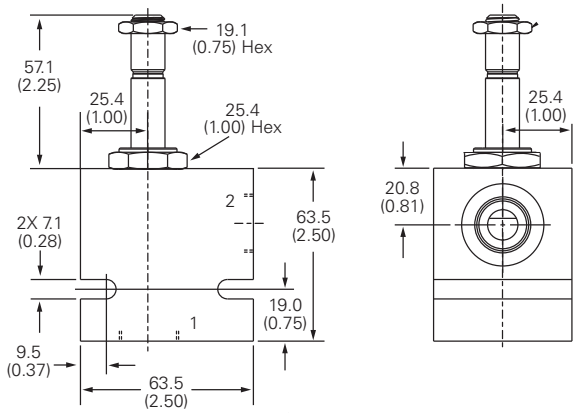

⚠ Warning
Maintain 5-8 Nm (4-6 ft lbs) maximum torque on valve tube nut.

Over tightening may cause valve failure.

Where measurements are critical request certified drawings. We reserve the right to change specifications without notice.

SV14-10-C/CM - Solenoid valve

Spool type, normally closed solenoid valve
23 L/min (6 USgpm) • 350 bar (5000 psi)

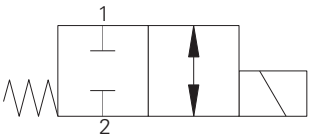

Operation

In the de-energized position the valve blocks flow in both directions.

When the solenoid is energized the spool moves allowing the valve to open in both directions.

Features

Hardened, ground and honed working parts to limit leakage. IP69 Tough coil compatibility. Continuously rated. Compact design with low pressure drop. 350 bar working pressure.

Sectional view

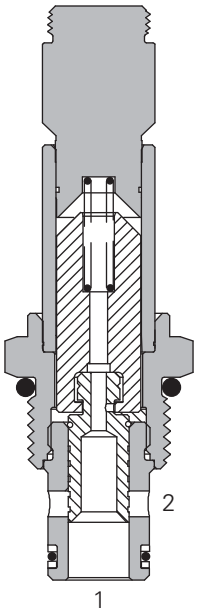

Performance data

Ratings and specifications

Performance data is typical with fluid at 21,8 cST (105 SUS) and 49°C (120°F)	
Typical application pressure (all ports)	350 bar (5000 psi)
Cartridge fatigue pressure (infinite life)	310 bar (4500 psi)
Rated flow	23 L/min (6 USgpm)
Internal leakage	140 cm^3/min (8.5 in^3/min) max @ 350 bar (5000 psi)
Temperature range	-40° to 100°C (-40° to 212°F)
Coil duty	Continuous from 85% to 110% of nominal voltage
Cavity	C-10-2
Fluids	All general purpose hydraulic fluids such as: MIL-H-5606, SAE 10, SAE 20 etc
Filtration	Cleanliness code 18/**16/13**
Housing material (standard)	Steel
Weight cartridge only	0,18 kg (0.39 lbs)
Seal kit	565806 (Buna-N), 889627 (Viton®)

Viton is a registered trademark of E.I. DuPont

Description

This is a 2-way, 2-position, spool type, high pressure, direct acting, normally closed solenoid valve. This valve is used in applications where the flow needs to be blocked in both directions when the solenoid is de-energized.

Pressure drop

Cartridge only

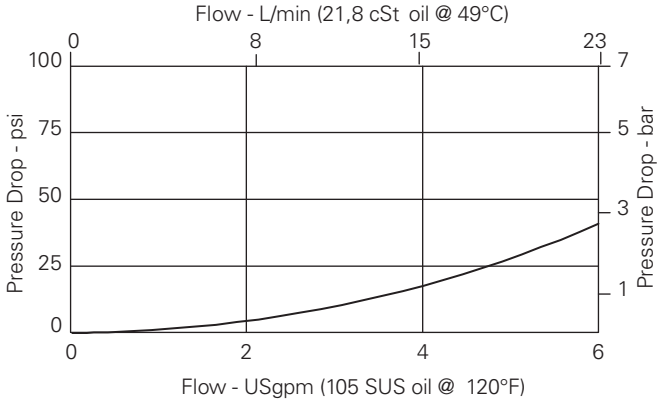

A - Port 2 to port 1 energized
B - Port 1 to port 2 de-energized

Where measurements are critical request certified drawings. We reserve the right to change specifications without notice.

SV14-10-C/CM - Solenoid valve

Spool type, normally closed solenoid valve
23 L/min (6 USgpm) • 350 bar (5000 psi)

Model code

SV14	–	10	(V)	–	C	(M)	–	(S)	**	–	****	*	H	–	00
1		2	3		4	5		6	7		8	9	10		11

1 Function
SV14 - Solenoid valve

2 Size
10 - 10 size

3 Seal material
Blank - Buna-N
V - Viton®

4 Style
C - Normally closed

5 Manual override option
Blank - No manual override
M - Manual override

For valve dimensions with manual override option installed see page A-980.

6 Valve housing material
Blank - Cartridge only
S - Steel

7 Port size

Code	Port size	Housing number
0	Cartridge only	
2G	1/4" BSPP	02-175102
3G	3/8" BSPP	02-175103
6T	SAE 6	02-175100
8T	SAE 8	02-175101

See section J for housing details.

8 Voltage rating
00 - No coil
12D - 12VDC
24D - 24VDC
36D - 36VDC
24A - 24VAC
115A - 115VAC
230A - 230VAC
12B - 12VDC/w diode*
24B - 24VDC/w diode*

*Optional arc suppression diode.

9 Connector types
Blank - No coil
G - ISO 4400 DIN 43650
Q - Spade terminals
W - Flying lead
N - Deutsch (DC only)
Y - Amp JR (DC only)
D - Metripack 150 male (DC only)
J - Metripack 280 male (DC only)

10 Coil series
H - 10 Series, 29 W

For coil part numbers and dimensions see section C.

11 Special features
00 - None

(Only required if valve has special features, omitted if "00".)

Dimensions
mm (inch)

Cartridge only

Torque cartridge in steel housing 68-75 Nm (50-55 ft lbs)

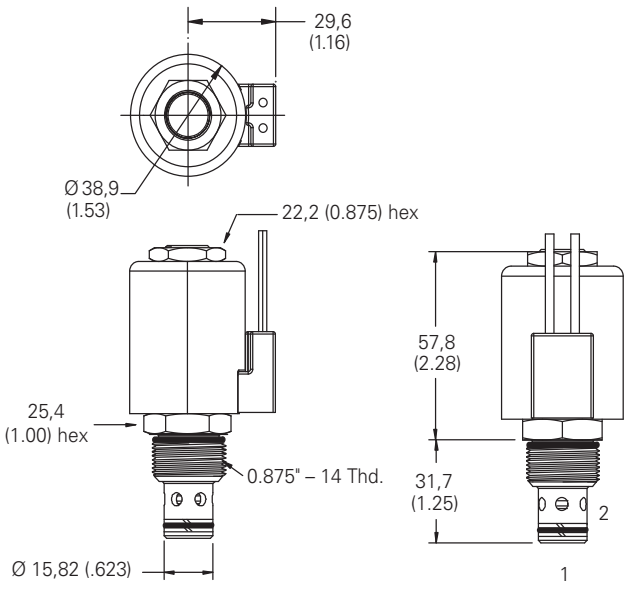

Note: When solenoid valve is ordered as cartridge only, coil nut is included.

⚠ Warning

Maintain 5-8 Nm (4-6 ft lbs) maximum torque on valve tube nut.

Over tightening may cause valve failure.

Where measurements are critical request certified drawings. We reserve the right to change specifications without notice.

S207 - Solenoid valve

Poppet type, normally open solenoid valve
Port 1 - 1 L/min (0.25 USgpm) • 350 bar (5000 psi)
Port 2 - 1 L/min (0.25 USgpm) • 210 bar (3000 psi)

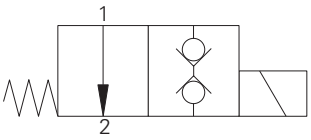

Operation

In the de-energized position the valve allows free flow from port 1 to 2. When the solenoid is energized the poppet closes the valve blocking flow from port 1 to 2 and 2 to 1.

Features

- High flow capacity with reduced space requirements.
- No dynamic seals.
- Standard valve bodies and common cavities.
- One-piece encapsulated coil with minimal amperage draw.
- Oil immersed armature solenoid.
- Various coil terminals and voltages.
- Coil interchangeability with valves of same series.
- Manual override, seal variations and other options available.
- Sealed coil arrangement to protect stem from corrosion.

Sectional view

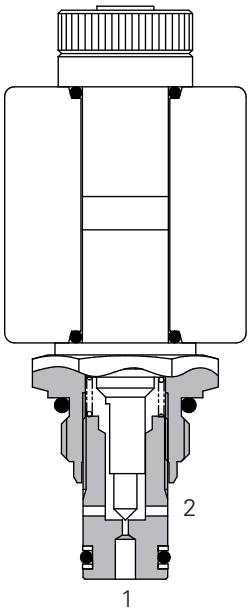

Performance data

Ratings and specifications

Performance data is typical with viscosity at 32 cST (150 SSU)	
Max working pressure	Port 2 210 bar (3000 psi) Port 1 350 bar (5000 psi)
Rated flow	1 L/min (0.25 USgpm)
Internal leakage	0.3 ml/min (5 dpm) when energized 210 bar differential at 32 est.
Temperature range	-30° to 120°C (-22° to +248°F)
Cavity	A879 (see Section M)
Torque cartridge into cavity	20 Nm (15 lbs ft)
Mounting position	Unrestricted
Fluids	All general purpose hydraulics fluids such as MIL-H-5606, SAE 10, SAE 20, etc
Seal material	Standard Viton with PTFE back up rings
Filtration	BS5540/4 Class 18/13 (25 micron or better)
Nominal viscosity range	15 to 250 cSt
Standard housing materials	Aluminium
Cartridge material	Working parts hardened and ground steel. External surfaces zinc plated.
Coil Weight	0.2 kg (0.4 lbs)
Weight	0.1 kg (0.2 lbs)
Seal kit	SK1043V (Viton)
Coil part number	C13-*-*/22
Coil voltage available	12, 24 VDC, 110, 220, VAC*

Viton is a registered trademark of E.I. DuPont
*AC coils must be used with a rectifying connector

Description

This is a 2-way, 2-position, poppet type, low flow, high pressure, normally open solenoid valve. This valve is used as a pilot valve to control pilot lines or as the pilot valve for logic elements. It can be used to vent systems up to 350 bar (5000psi) on the inlet port but the outlet port should be limited to 210 bar (3000psi).

Pressure drop

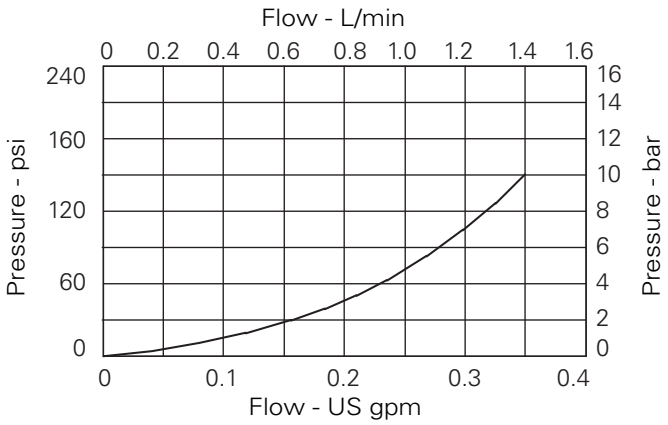

Where measurements are critical request certified drawings. We reserve the right to change specifications without notice.

S207 - Solenoid valve

Poppet type, normally open solenoid valve
Port 1 - 1 L/min (0.25 USgpm) • 350 bar (5000 psi)
Port 2 - 1 L/min (0.25 USgpm) • 210 bar (3000 psi)

Model code

S207 V – 24 H – 3W

1 2 3 4 5

1 Function
S207 - Normally open

2 Seal material
V - Viton®

3 Voltage
12 - 12 VDC
24 - 24 VDC
110 - 110 VAC
220 - 220 VAC

4 Coil Termination
H - DIN43650
F - Flying lead
DM - Deutsch moulded

Other terminations available on request.

5 Port sizes

Code	Port size	Housing number - Body only	
		Aluminium	Steel
2W	1/4" BSP	A1485	
3W	3/8" BSP	A1043	A14175
6T	3/8" SAE	A15676	A14843

Dimensions
mm (inch)

Note: For applications above 210 bar please consult our technical department or use the steel body option.

Cartridge only

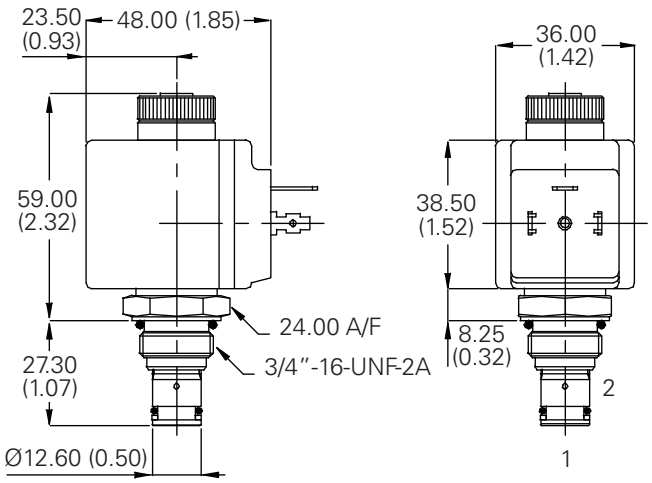

Installation drawing (Aluminum, steel)

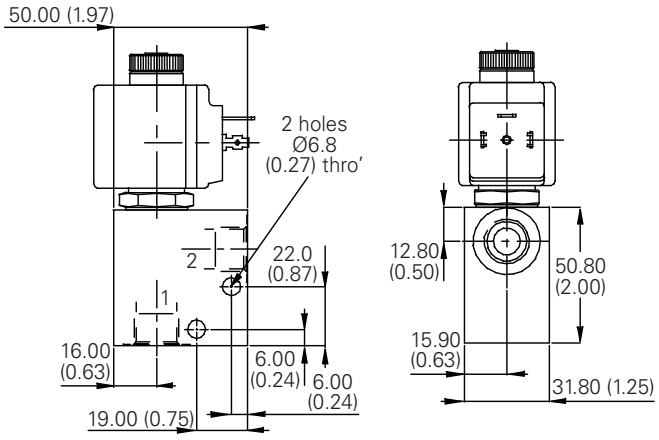

Where measurements are critical request certified drawings. We reserve the right to change specifications without notice.

SV5-8-O/OP/OS - Solenoid valve

Poppet type, normally open solenoid valve
23 L/min (6 USgpm) • 210 bar (3000 psi)

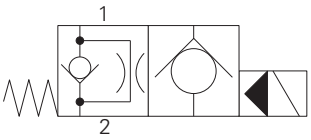

Operation

In the de-energized position the valve allows free flow from port 2 to 1 and a restricted flow through the pilot orifice from port 1 to 2.

When the solenoid is energized the pilot poppet closes the orifice and the valve closes blocking flow from port 2 to 1 while allowing free flow from port 1 to 2.

Features

Hardened and ground working parts. Lapped seat for low leakage. IP69K Tough coil compatibility. Continuously rated. Compact design with low pressure drop.

Sectional view

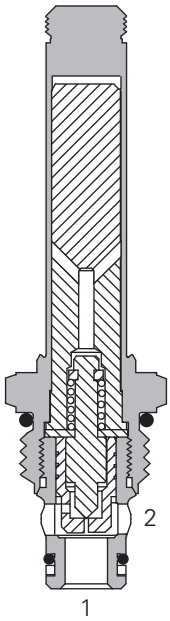

Performance data

Ratings and specifications

Performance data is typical with fluid at 21,8 cST (105 SUS) and 49°C (120°F)	
Typical application pressure (all ports)	210 bar (3000 psi)
Cartridge fatigue pressure (infinite life)	210 bar (3000 psi)
Rated flow	23 L/min (6 USgpm)
Internal leakage	less than 5 drops/min, max @ 210 bar (3000 psi) with valve energized
Temperature range	-40° to 120°C (-40° to 248°F)
Coil duty	Continuous from 85% to 110% of nominal voltage
Response times (100% rated voltage and flow)	Energize: 24 ms. De-Energize: 25 ms
Cavity	C-8-2
Fluids	All general purpose hydraulic fluids such as: MIL-H-5606, SAE 10, SAE 20 etc
Filtration	Cleanliness code 18/**16/13**
Housing material (standard)	Aluminum
Weight including coil	0,28 kg (0.62 lbs)
Seal kit	02-165875 (Buna-N), 02-165877 (Viton®)

Viton is a registered trademark of E.I. DuPont

Description

This is a 2-way, 2-position, poppet type, pilot operated, normally open solenoid valve. This valve is used in applications requiring low leakage, such as load holding applications or as a general purpose diverter or dump valve.

Pressure drop

Cartridge only

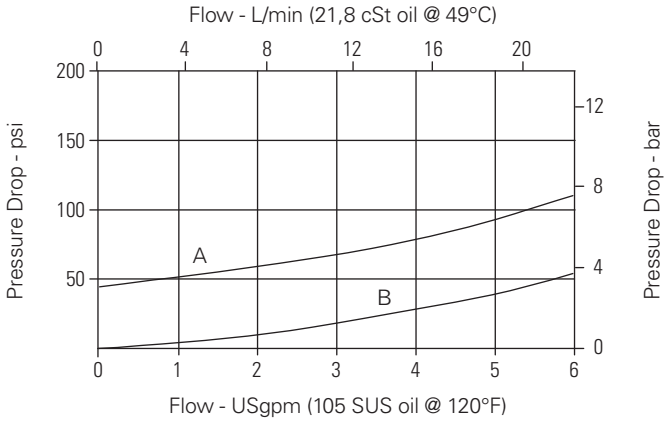

A - Port 1 to port 2 energized
B - Port 2 to port 1 de-energized

Where measurements are critical request certified drawings. We reserve the right to change specifications without notice.

SV5-8-O/OP/OS - Solenoid valve

Poppet type, normally open solenoid valve
23 L/min (6 USgpm) • 210 bar (3000 psi)

Model code

SV5	–	8	(V)	–	O	(*)	(F)	–	(A)	**	–	****	*	S	–	00
1		2	3		4	5	6		7	8		9	10	11		12

1 Function
SV5 - Solenoid valve

2 Size
8 - 8 size

3 Seal material
Blank - Buna-N
V - Viton®

4 Style
O - Normally open

5 Manual override option
Blank - No manual override
P - Push type
S - Screw type

For valve dimensions with manual override option installed see page A-980.

6 Filter option
Blank - None
F - Filter screen

8 Port size

Code	Port size	Housing number
0	Cartridge only	
2G	1/4" BSPP	02-160727
3G	3/8" BSPP	02-160728
4T	SAE 4	02-160730
6T	SAE 6	02-160731
8T	SAE 8	02-160732

See section J for housing details.

7 Valve housing material
Omit for cartridge only
A - Aluminum

9 Voltage rating
00 - No coil
12D - 12VDC
24D - 24VDC
36D - 36VDC
24A - 24VAC
115A - 115VAC
230A - 230VAC
12B - 12VDC/w diode*
24B - 24VDC/w diode*

*Optional arc suppression diode.

Torque cartridge in aluminum housing 34-41 Nm (25-30 ft lbs)

Note: When solenoid valve is ordered as cartridge only, coil nut is included.

10 Connector types
Blank - No coil
G - ISO 4400 DIN 43650
Q - Spade terminals
W - Flying lead
N - Deutsch (DC only)
Y - Amp JR (DC only)
D - Metripack 150 male (DC only)
J - Metripack 280 male (DC only)

11 Coil series
S - 8 series, 20 W

For coil part numbers and dimensions see section C.

12 Special features
00 - None

(Only required if valve has special features, omitted if "00".)

Dimensions
mm (inch)

Cartridge only

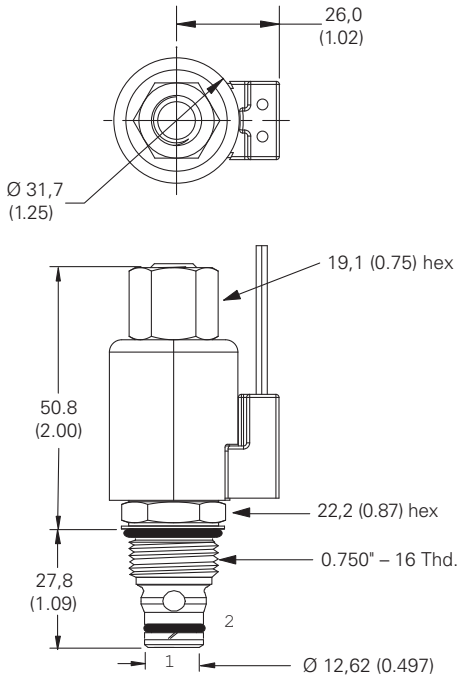

Installation drawing

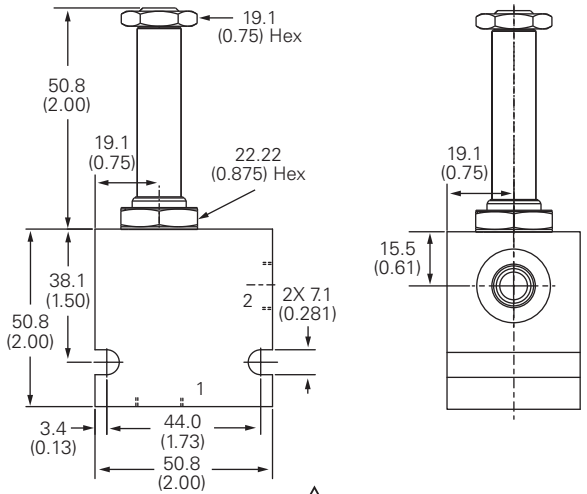

⚠ Warning
Maintain 5-8 Nm (4-6 ft lbs) maximum torque on valve tube nut.

Over tightening may cause valve failure.

Where measurements are critical request certified drawings. We reserve the right to change specifications without notice.

SV15-8-O/OP/OS - Solenoid valve

Poppet type, normally open solenoid valve
37 L/min (10 USgpm) • 350 bar (5000 psi)

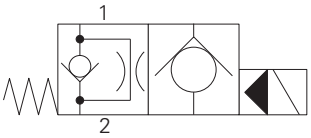

Operation

In the de-energized position the valve allows free flow from port 2 to 1 and a restricted flow through the pilot orifice from port 1 to 2.

When the solenoid is energized the pilot poppet closes the orifice and the valve closes blocking flow from port 2 to 1 while allowing free flow from port 1 to 2.

Features

Hardened and ground working parts. Lapped seat for low leakage. IP69K Tough coil compatibility. Continuously rated. Compact design with low pressure drop. 350 bar working pressure.

Sectional view

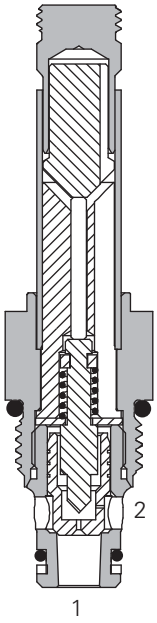

Performance data

Ratings and specifications

Performance data is typical with fluid at 21,8 cST (105 SUS) and 49°C (120°F)	
Typical application pressure (all ports)	350 bar (5000 psi)
Cartridge fatigue pressure (infinite life)	310 bar (4500 psi)
Rated flow	37 L/min (10 USgpm)
Internal leakage	5 drops/min, max @ 210 bar (3000 psi)
Temperature range	-40° to 100°C (-40° to 212°F)
Coil duty	Continuous from 85% to 110% of nominal voltage
Cavity	C-8-2
Fluids	All general purpose hydraulic fluids such as: MIL-H-5606, SAE 10, SAE 20 etc
Filtration	Cleanliness code 18/**16/13**
Housing material (standard)	Steel
Weight cartridge only	0,11 kg (0.25 lbs)
Seal kit	02-165875 (Buna-N), 02-165877 (Viton®)

Viton is a registered trademark of E.I. DuPont

Description

This is a 2-way, 2-position, poppet type, high pressure, pilot operated, normally open solenoid valve. This valve is used in applications requiring low leakage, such as load holding applications or as a general purpose diverter or dump valve.

Pressure drop

Cartridge only

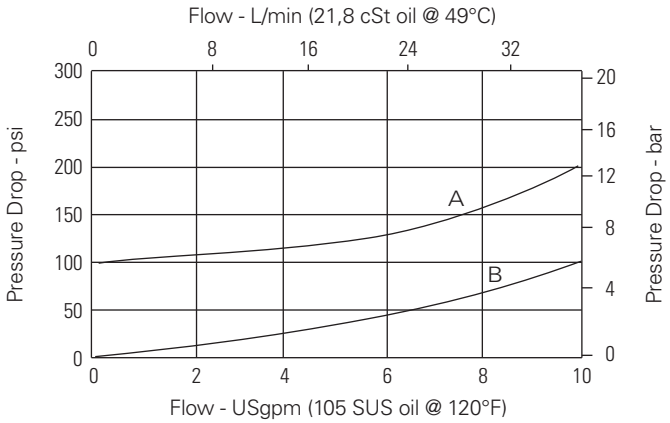

A - Port 1 to port 2 energized
B - Port 2 to port 1 de-energized

Where measurements are critical request certified drawings. We reserve the right to change specifications without notice.

SV15-8-O/OP/OS - Solenoid valve

Poppet type, normally open solenoid valve
37 L/min (10 USgpm) • 350 bar (5000 psi)

Model code

SV15	–	8	(V)	–	O	(*)	–	(S)	**	–	****	*	P	–	00
1		2	3		4	5		6	7		8	9	10		11

1 Function
SV15 - Solenoid valve

2 Size
8 - 8 size

3 Seal material
Blank - Buna-N
V - Viton®

4 Style
O - Normally open

5 Manual override option
Blank - No manual override
P - Push type
S - Screw type

For valve dimensions with manual override option installed see page A-980.

6 Valve housing material
Blank - Cartridge only
S - Steel

7 Port size

Code	Port size	Housing number
0	Cartridge only	
2G	1/4" BSPP	02-160733
3G	3/8" BSPP	02-160734
4T	SAE 4	02-160736
6T	SAE 6	02-160737
8T	SAE 8	02-160738

See section J for housing details.

8 Voltage rating
00 - No coil
12D - 12VDC
24D - 24VDC
36D - 36VDC
24A - 24VAC
115A - 115VAC
230A - 230VAC
12B - 12VDC/w diode*
24B - 24VDC/w diode*

*Optional arc suppression diode.

9 Connector types
Blank - No coil
G - ISO 4400 DIN 43650
Q - Spade terminals
W - Flying lead
N - Deutsch (DC only)
Y - Amp JR (DC only)
D - Metripack 150 male (DC only)
J - Metripack 280 male (DC only)

10 Coil series
P - 8 series, 23 W

For coil part numbers and dimensions see section C.

11 Special features
00 - None

(Only required if valve has special features, omitted if "00".)

Dimensions
mm (inch)

Cartridge only

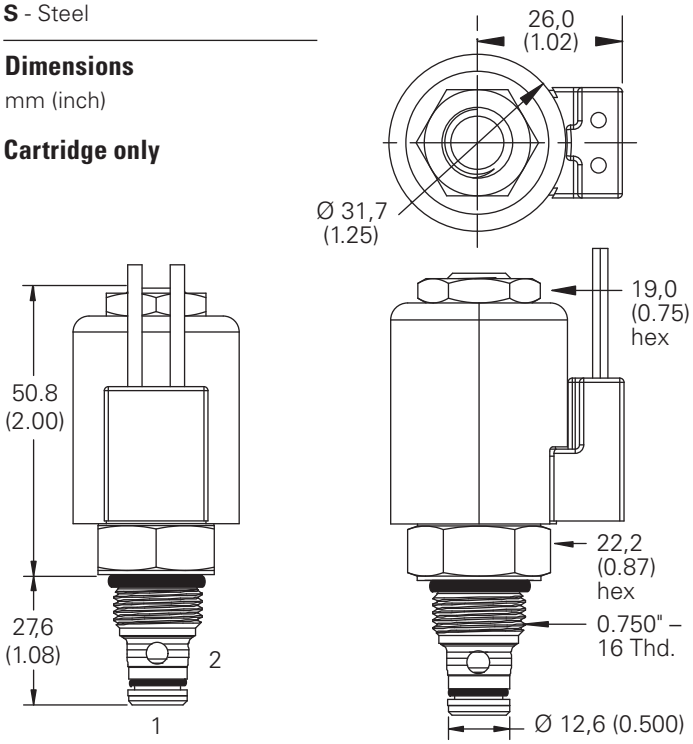

Torque cartridge in steel housing 34-41 Nm (25-30 ft lbs)

Note: When solenoid valve is ordered as cartridge only, coil nut is included.

Installation drawing

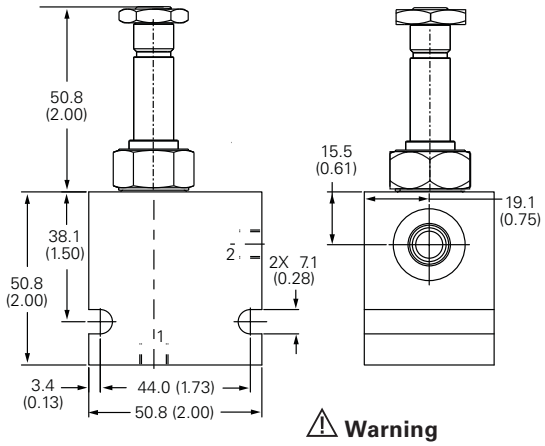

⚠ Warning

Maintain 5-8 Nm (4-6 ft lbs) maximum torque on valve tube nut.

Over tightening may cause valve failure.

Where measurements are critical request certified drawings. We reserve the right to change specifications without notice.

SBV11-8-O - Solenoid Bi-directional valve

Bi-directional, normally open solenoid valve
60 L/min (15 USgpm) • 350 bar (5000 psi)

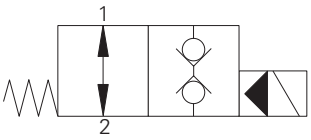

Operation

In the de-energized position the valve is open in both directions. A series of internal check valves allows full flow in both directions.

When the solenoid is energized the pilot poppet closes the pilot orifice causing the main poppet to close.

Features

Hardened and ground working parts. Lapped seat for low leakage. IP69K Tough coil compatibility. Continuously rated. Compact design with low pressure drop. 350 bar working pressure.

Sectional view

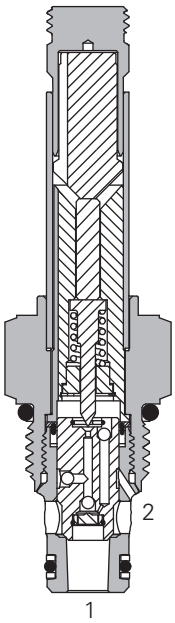

Performance data

Ratings and specifications

Performance data is typical with fluid at 21,8 cST (105 SUS) and 49° C (120° F)	
Typical application pressure (all ports)	350 bar (5000 psi)
Cartridge fatigue pressure (infinite life)	310 bar (4500 psi)
Rated flow	60 L/min (15 USgpm)
Internal leakage, port 1 to port 2 & port 2 to port 1	5 drops/min max @ 350 bar (5000 psi) when energized
Temperature range	-40° to 100° C (-40° to 212° F)
Coil duty	Continuous from 85% to 110% of nominal voltage
Cavity	C-8-2
Fluids	All general purpose hydraulics fluids such as: MIL-H-5606, SAE 10, SAE 20 etc.
Filtration	Cleanliness code 18/**16/13**
Housing material (standard)	Aluminum or steel
Weight cartridge only	0,12 kg (0.26 lbs)
Seal kit	02-160777 (Buna-N), 02-160778 (Viton®)

Viton is a registered trademark of E.I. DuPont

Description

This is a 2-way 2-position, high pressure bi-directional, pilot operated, normally open poppet type screw in cartridge valve. The valve is ideal for isolating and holding actuators in position.

Pressure drop

Cartridge only

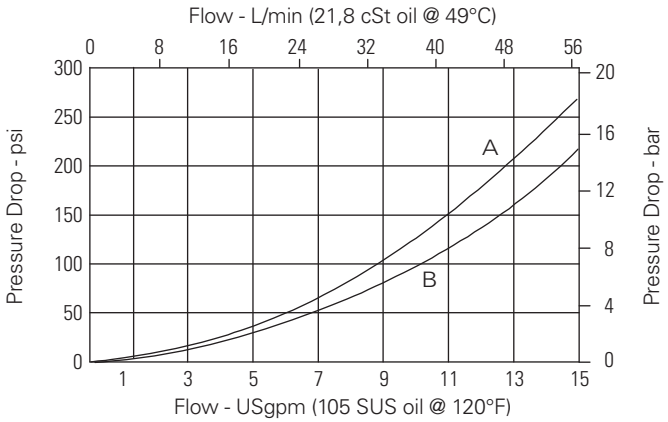

A - Port 1 to port 2
B - Port 2 to port 1

Where measurements are critical request certified drawings. We reserve the right to change specifications without notice.

SBV11-8-O - Solenoid Bi-directional valve

Bi-directional, normally open solenoid valve
60 L/min (15 USgpm) • 350 bar (5000 psi)

Model code

SBV11 – 8 (V) – O – (*) ** – ** * P – 00**

1 2 3 4 5 6 7 8 9 10

1 Function

SBV11 - Solenoid bi-directional valve

2 Size

8 - 8 size

3 Seal material

Blank - Buna-N
V - Viton®

4 Style

O - Normally open

5 Valve housing material

Blank - Cartridge only
A - Aluminum
S - Steel

6 Port size

Code	Port size	Housing number	
		Aluminium	Steel
0	Cartridge only		
2G	1/4" BSPP	02-160727	02-160733
3G	3/8" BSPP	02-160728	02-160734
4T	SAE 4	02-160730	02-160736
6T	SAE 6	02-160731	02-160737
8T	SAE 8	02-160732	02-160738

See section J for housing details.

7 Voltage rating

00 - No coil
12D - 12VDC
24D - 24VDC
36D - 36VDC
24A - 24VAC
115A - 115VAC
230A - 230VAC
12B - 12VDC/w diode*
24B - 24VDC/w diode*

*Optional arc suppression diode.

8 Connector types

Blank - No coil
G - ISO 4400 DIN 43650
Q - Spade terminals
W - Flying lead
N - Deutsch (DC only)
Y - Amp JR (DC only)
D - Metripack 150 male (DC only)
J - Metripack 280 male (DC only)

9 Coil series

P - 8 Series, 23 W

For coil part numbers and dimensions see section C.

10 Special features

00 - None

(Only required if valve has special features, omitted if "00".)

Dimensions

mm (inch)

Cartridge only

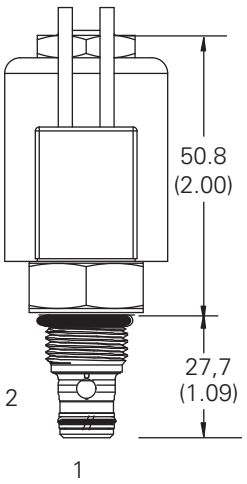

Torque cartridge in aluminum or steel housing 34-41 Nm (25-30 ft lbs)

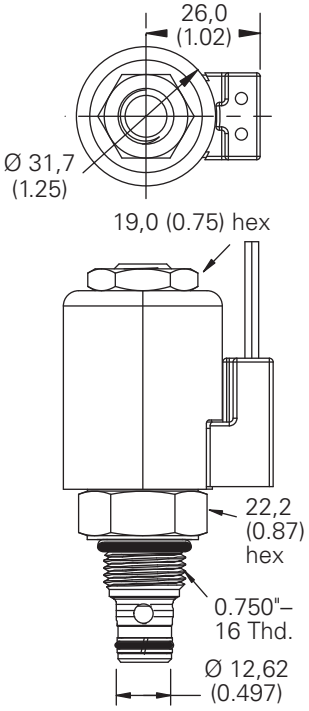

Note: When solenoid valve is ordered as cartridge only, coil nut is included.

Installation drawing (Steel)

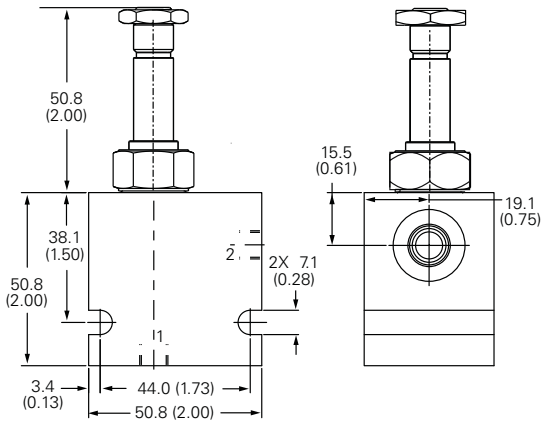

⚠ Warning

Maintain 5-8 Nm (4-6 ft lbs) maximum torque on valve tube nut.

Over tightening may cause valve failure.

⚠ Warning

Aluminum housings can be used for pressures up to 210 bar (3000 psi). Steel housings must be used for operating pressures above 210 bar (3000 psi).

Where measurements are critical request certified drawings. We reserve the right to change specifications without notice.

SV3-8-O/OP/OS - Solenoid valve

Poppet type, normally open solenoid valve
23 L/min (6 USgpm) • 210 bar (3000 psi)

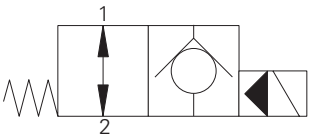

Operation

In the de-energized position the valve allows free flow in both directions.

When the solenoid is energized the pilot poppet closes the orifice and the valve closes blocking flow from port 2 to 1 while allowing free flow from port 1 to 2.

Features

Hardened and ground working parts. Lapped seat for low leakage. IP69K Tough coil compatibility. Continuously rated. Compact design with low pressure drop.

Sectional view

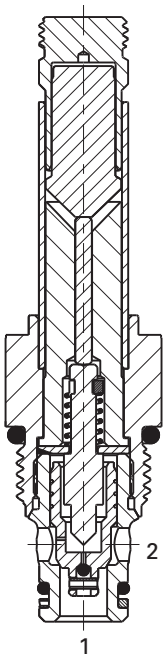

Performance data

Ratings and specifications

Performance data is typical with fluid at 21,8 cST (105 SUS) and 49° C (120° F)	
Typical application pressure (all ports)	210 bar (3000 psi)
Cartridge fatigue pressure (infinite life)	210 bar (3000 psi)
Rated flow	23 L/min (6 USgpm)
Internal leakage	less than 5 drops/min, max @ 210 bar (3000 psi) with valve energized
Temperature range	-40° to 120°C (-40° to 248°F)
Coil duty	Continuous from 85% to 110% of nominal voltage
Response times (100% rated voltage and flow)	Energize: 24 ms. De-Energize: 25 ms
Cavity	C-8-2
Fluids	All general purpose hydraulic fluids such as: MIL-H-5606, SAE 10, SAE 20 etc
Filtration	Cleanliness code 18/16/13
Housing material (standard)	Aluminum
Weight including coil	0,28 kg (0.62 lbs)
Seal kit	02-165875 (Buna-N) 02-165877 (Viton®)

Viton is a registered trademark of E.I. DuPont

Description

This is a 2-way, 2-position, poppet type, pilot operated, normally open solenoid valve. This valve is used in applications requiring low leakage, such as load holding applications or as a general purpose diverter or dump valve.

Pressure drop

Cartridge Only

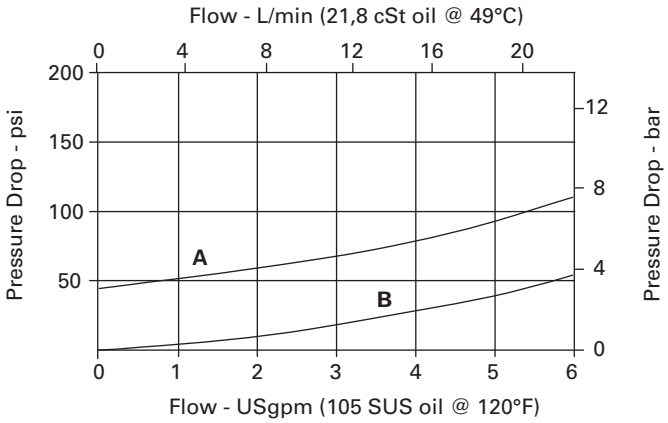

A - Port 1 to port 2 energized
B - Port 2 to port 1 de-energized

Where measurements are critical request certified drawings. We reserve the right to change specifications without notice.

SV3-8-O/OP/OS - Solenoid valve

Poppet type, normally open solenoid valve
23 L/min (6 USgpm) • 210 bar (3000 psi)

Model code

SV3	–	8	(V)	–	O	(*)	(F)	–	(A)	**	–	****	*	S	–	00
1		2	3		4	5	6		7	8		9	10	11		12

1 Function
SV3 - Solenoid valve

2 Size
8 - 8 size

3 Seal material
Blank - Buna-N
V - Viton®

4 Style
O - Normally open

5 Manual override option
Blank - No manual override
P - Push type
S - Screw type

For valve dimensions with manual override option installed see page A-980.

6 Filter option
Blank - None
F - Filter screen

8 Port size

Code	Port size	Housing number
0	Cartridge only	
2G	1/4" BSPP	02-160727
3G	3/8" BSPP	02-160728
4T	SAE 4	02-160730
6T	SAE 6	02-160731
8T	SAE 8	02-160732

See section J for housing details.

7 Valve housing material
Omit for cartridge only
A - Aluminum

9 Voltage rating
00 - No coil
12D - 12VDC
24D - 24VDC
36D - 36VDC
24A - 24VAC
115A - 115VAC
230A - 230VAC
12B - 12VDC/w diode*
24B - 24VDC/w diode*

*Optional arc suppression diode.

10 Connector types
Blank - No coil
G - ISO 4400 DIN 43650
Q - Spade terminals
W - Flying lead
N - Deutsch (DC only)
Y - Amp JR (DC only)
D - Metripack 150 male (DC only)
J - Metripack 280 male (DC only)

11 Coil series
S - 8 series, 20 W

For coil part numbers and dimensions see section C.

12 Special features
00 - None

(Only required if valve has special features, omitted if "00".)

Dimensions
mm (inch)

Torque cartridge in aluminum housing 34-41 Nm (25- 30 ft lbs)

Note: When solenoid valve is ordered as cartridge only, coil nut is included.

Cartridge only

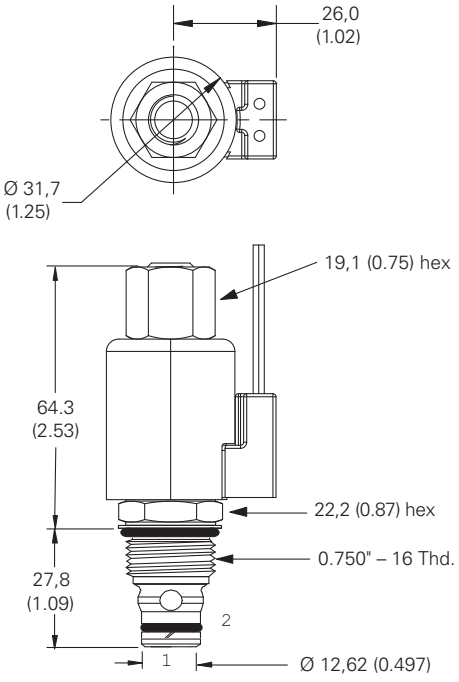

Installation drawing

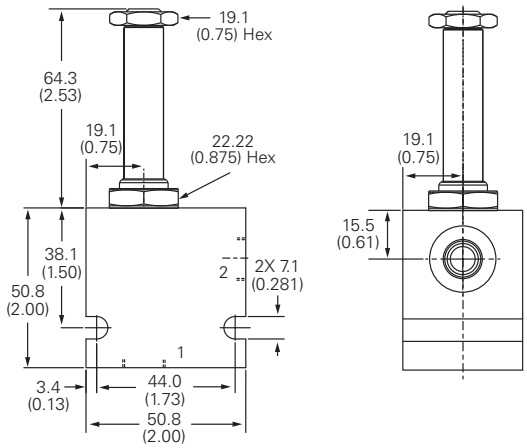

⚠ Warning

Maintain 5-8 Nm (4-6 ft lbs) maximum torque on valve tube nut.

Over tightening may cause valve failure.

Where measurements are critical request certified drawings. We reserve the right to change specifications without notice.

SV3-10-O/OP/OS - Solenoid valve

Poppet type, normally open solenoid valve (free reverse flow)
45 L/min (12 USgpm) • 210 bar (3000 psi)

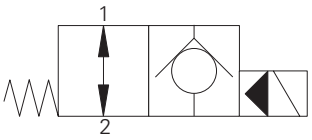

Operation

In the de-energized position the valve allows free flow in both directions.

When the solenoid is energized the pilot poppet closes the orifice and the valve closes blocking flow from port 2 to 1 while allowing free flow from port 1 to 2.

Features

Hardened and ground working parts. Lapped seat for low leakage. IP69K Tough coil compatibility. Continuously rated. Compact design with low pressure drop.

Sectional view

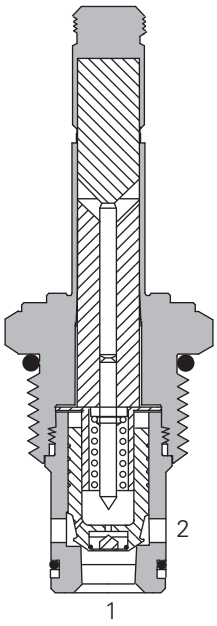

Performance data

Ratings and specifications

Performance data is typical with fluid at 21,8 cSt (105 SUS) and 49° C (120° F)	
Typical application pressure (all ports)	210 bar (3000 psi)
Cartridge fatigue pressure (infinite life)	210 bar (3000 psi)
Rated flow	45 L/min (12 USgpm)
Internal leakage, port 2 to port 1	less than 5 drops/min max @ 210 bar (3000 psi)
Temperature range	-40° to 120°C (-40° to 248°F)
Coil duty	Continuous from 85% to 110% of nominal voltage
Cavity	C-10-2
Fluids	All general purpose hydraulics fluids such as: MIL-H-5606, SAE 10, SAE 20 etc.
Filtration	Cleanliness code 18/**16/13**
Housing material (standard)	Aluminum
Weight including coil	0,4 kg (0.87 lbs)
Seal kit	565803 (Buna-N), 566086 (Viton®)

Viton is a registered trademark of E.I. DuPont

Description

This is a 2-way, 2-position, poppet type, pilot operated, normally open solenoid valve. This valve is used in applications requiring low leakage, such as load holding applications or as a general purpose diverter or dump valve.

Pressure drop

Cartridge only

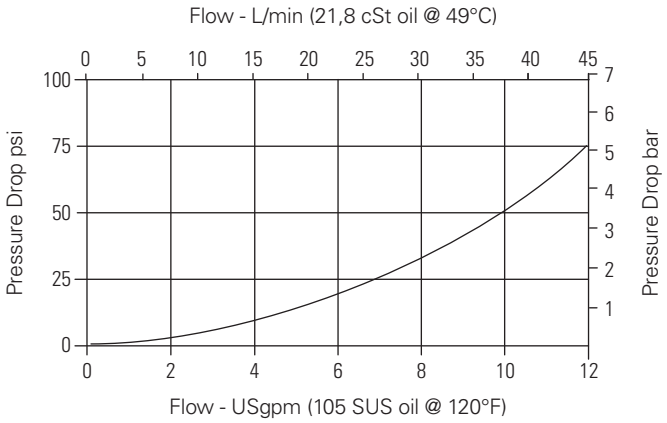

Port 1 to port 2 and port 2 to port 1 de-energized

Where measurements are critical request certified drawings. We reserve the right to change specifications without notice.

SV3-10-O/OP/OS - Solenoid valve

Poppet type, normally open solenoid valve (free reverse flow)
45 L/min (12 USgpm) • 210 bar (3000 psi)

Model code

SV3 – 10 (V) – O (*) (F) – ** – **** * – 00

1 2 3 4 5 6 7 8 9 10

1 Function

SV3 - Solenoid valve

2 Size

10 - 10 size

3 Seal material

Blank - Buna-N

V - Viton®

4 Style

O - Normally open

5 Manual override option

Blank - No manual override

P - Push type

S - Screw type

For valve dimensions with manual override option installed see page A-980.

6 Filter option

Blank - None

S - Filter Screen

7 Port size

Code	Port size	Housing number
0	Cartridge only	
3B	3/8" BSPP	02-175462*
6T	SAE 6	566151*
2G	1/4" BSPP	876702
3G	3/8" BSPP	876703
6H	SAE 6	876700
8H	SAE 8	876701

*Light duty housing.
See section J for housing details.

8 Voltage rating

00 - No coil

12D - 12VDC

24D - 24VDC

36D - 36VDC

24A - 24VAC

115A - 115VAC

230A - 230VAC

12B - 12VDC/w diode*

24A - 24VDC/w diode*

*Optional arc suppression diode.

9 Connector types

Blank - No coil

G - ISO 4400 DIN 43650

Q - Spade terminals

W - Flying lead

N - Deutsch (DC only)

Y - Amp JR (DC only)

D - Metripack 150 male (DC only)

J - Metripack 280 male (DC only)

For coil part numbers and dimensions see section C.

10 Special features

00 - None

(Only required if valve has special features, omitted if "00".)

Dimensions

mm (inch)

Cartridge only

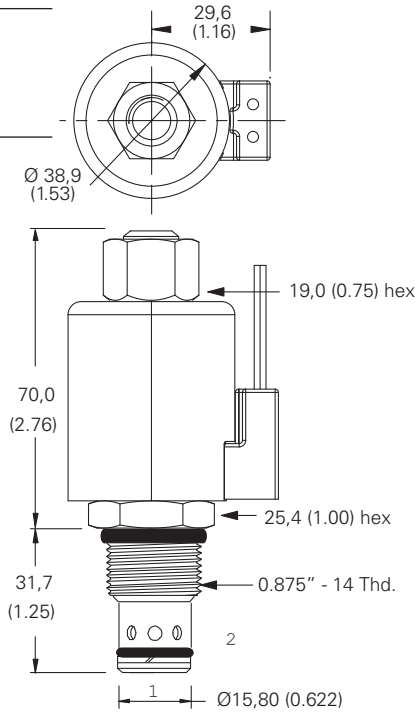

Torque cartridge in aluminum housing 47-54 Nm (35-40 ft lbs)

Note: Use J series, 23 W coils with this solenoid valve.

Installation drawing

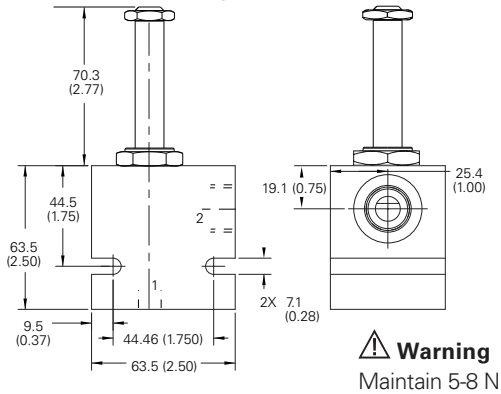

Note: When solenoid valve is ordered as cartridge only, coil nut is included.

⚠ Warning

Maintain 5-8 Nm (4-6 ft lbs) maximum torque on valve tube nut.

Over tightening may cause valve failure.

Where measurements are critical request certified drawings. We reserve the right to change specifications without notice.

SV5-10-O/OP/OS - Solenoid valve

Poppet type, normally open solenoid valve
45 L/min (12 USgpm) • 210 bar (3000 psi)

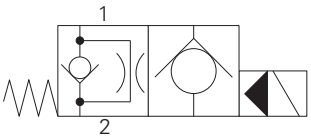

Operation

In the de-energized position the valve allows free flow from port 2 to 1 and a restricted flow through the pilot orifice from port 1 to 2.

When the solenoid is energized the pilot poppet closes the orifice and the valve closes blocking flow from port 2 to 1 while allowing free flow from port 1 to 2.

Features

Hardened and ground working parts. Lapped seat for low leakage. IP69K Tough coil compatibility. Continuously rated. Compact design with low pressure drop.

Sectional view

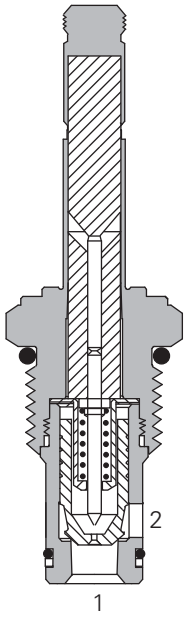

Performance data

Ratings and specifications

Performance data is typical with fluid at 21,8 cST (105 SUS) and 49°C (120°F)	
Typical application pressure (all ports)	210 bar (3000 psi)
Cartridge fatigue pressure (infinite life)	210 bar (3000 psi)
Rated flow	45 L/min (12 USgpm)
Internal leakage, port 2 to port 1	Less than 5 drops/min max @ 210 bar (3000 psi)
Temperature range	-40° to 120°C (-40° to 248°F)
Coil duty	Continuous from 85% to 110% of nominal voltage
Cavity	C-10-2
Fluids	All general purpose hydraulic fluids such as: MIL-H-5606, SAE 10, SAE 20 etc.
Filtration	Cleanliness code 18/**16/13**
Housing material (standard)	Aluminum
Weight including coil	0,4 kg (0.087 lbs)
Seal kit	565806 (Buna-N), 566086 (Viton®)

Viton is a registered trademark of E.I. DuPont

Description

This is a 2-way, 2-position, poppet type, pilot operated, normally open solenoid valve. This valve is used in applications requiring low leakage, such as load holding applications or as a general purpose diverter or dump valve.

Pressure drop

Cartridge only

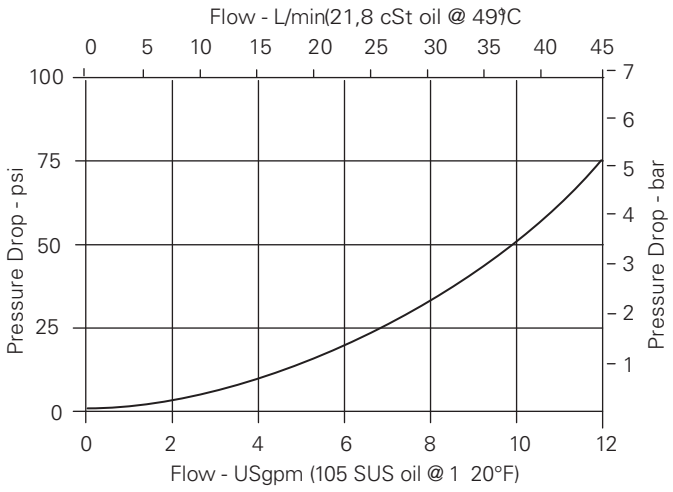

Port 2 to port 1 de-energized

Where measurements are critical request certified drawings. We reserve the right to change specifications without notice.

SV5-10-O/OP/OS - Solenoid valve

Poppet type, normally open solenoid valve
45 L/min (12 USgpm) • 210 bar (3000 psi)

Model code

SV5 – 10 (V) – O (*) (F) – ** – ** * – 00**

1 2 3 4 5 6 7 8 9 10

1 Function

SV5 - Solenoid valve

2 Size

10 - 10 size

3 Seal material

Blank - Buna-N

V - Viton®

4 Style

O - Normally open

5 Manual override option

Blank - No manual override
P - Push type
S - Screw type

For valve dimensions with manual override option installed see page A-980.

6 Filter option

Blank - None

F - Filter screen

7 Port size

Code	Port size	Housing number
0	Cartridge only	
3B	3/8" BSPP	02-175464*
6T	SAE 6	566151*
2G	1/4" BSPP	876702
3G	3/8" BSPP	876703
6H	SAE 6	876700
8H	SAE 8	876701

*Light duty housing.
See section J for housing details.

8 Voltage rating

00 - No coil
12D - 12VDC
24D - 24VDC
36D - 36VDC
24A - 24VAC
115A - 115VAC
230A - 230VAC
12B - 12VDC/w diode*
24B - 24VDC/w diode*

*Optional arc suppression diode.

9 Connector types

Blank - No coil
G - ISO 4400 DIN 43650
Q - Spade terminals
W - Flying lead
N - Deutsch (DC only)
Y - Amp JR (DC only)
D - Metripack 150 male (DC only)
J - Metripack 280 male (DC only)

For coil part numbers and dimensions see section C.

10 Special features

00 - None

(Only required if valve has special features, omitted if "00".)

Note: Use J series, 23 W coils with this solenoid valve.

Dimensions

mm (inch)

Cartridge only

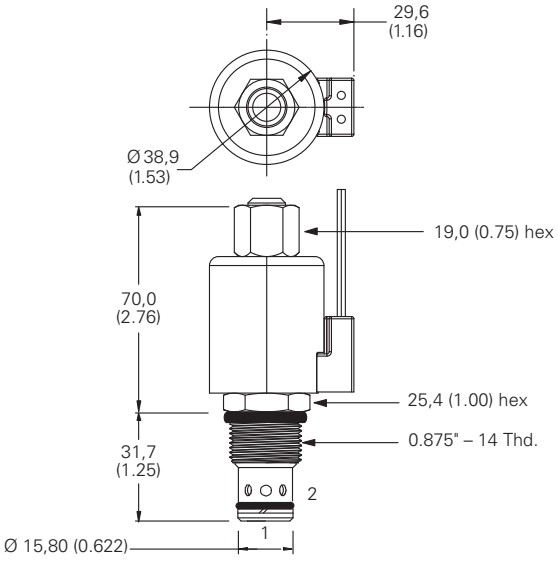

Torque cartridge in aluminum housing 47-54 Nm (35-40 ft lbs)

Note: When solenoid valve is ordered as cartridge only, coil nut is included.

⚠ Warning

Maintain 5-8 Nm (4-6 ft lbs) maximum torque on valve tube nut.

Over tightening may cause valve failure.

Where measurements are critical request certified drawings. We reserve the right to change specifications without notice.

SV15-10-O/OP/OS - Solenoid valve

Poppet type, normally open solenoid valve
45 L/min (12 USgpm) • 350 bar (5000 psi)

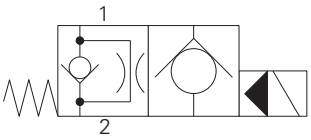

Operation

In the de-energized position the valve allows free flow from port 2 to 1 and a restricted flow through the pilot orifice from port 1 to 2.

When the solenoid is energized the pilot poppet closes the orifice and the valve closes blocking flow from port 2 to 1 while allowing free flow from port 1 to 2.

Features

Hardened and ground working parts. Lapped seat for low leakage. IP69K Tough coil compatibility. Continuously rated. Compact design with low pressure drop. 350 bar working pressure.

Sectional view

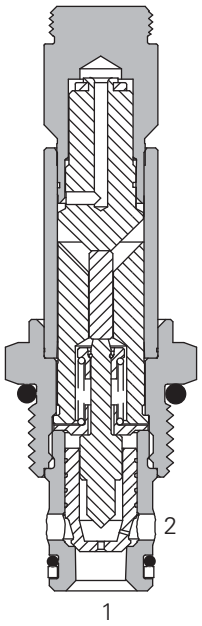

Performance data

Ratings and specifications

Performance data is typical with fluid at 21,8 cSt (105 SUS) and 49° C (120° F)	
Typical application pressure (all ports)	350 bar (5000 psi)
Cartridge fatigue pressure (infinite life)	310 bar (4500 psi)
Rated flow	45 L/min (12 USgpm)
Internal leakage	less than 5 drops/min, max @ 350 bar (5000 psi)
Temperature range	-40° to 100°C (-40° to 212°F)
Coil duty	Continuous from 85% to 110% of nominal voltage
Cavity	C-10-2
Fluids	All general purpose hydraulics fluids such as: MIL-H-5606, SAE 10, SAE 20 etc.
Filtration	Cleanliness code 18/**16/13**
Housing material (standard)	Steel
Weight cartridge only	0,18 kg (0.39 lbs)
Seal kit	565803 (Buna-N), 566086 (Viton®)

Viton is a registered trademark of E.I. DuPont

Description

This is a 2-way, 2-position, poppet type, high pressure, pilot operated, normally open solenoid valve. This valve is used in applications requiring low leakage, such as load holding applications or as a general purpose diverter or dump valve.

Pressure drop

Cartridge only

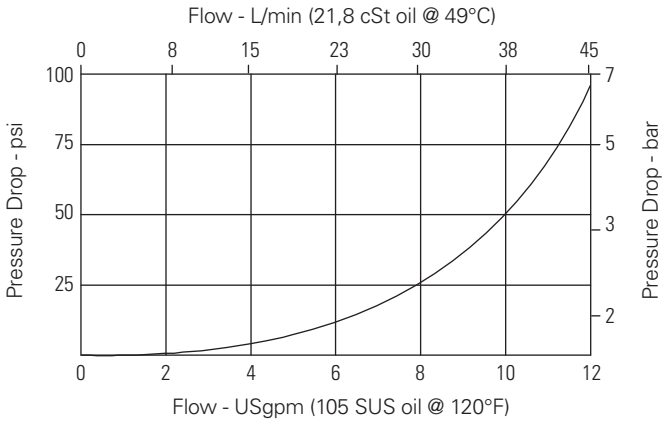

Port 2 to port 1 de-energized

Where measurements are critical request certified drawings. We reserve the right to change specifications without notice.

SV15-10-O/OP/OS - Solenoid valve

Poppet type, normally open solenoid valve
45 L/min (12 USgpm) • 350 bar (5000 psi)

Model code

SV15	–	10	(V)	–	O	(*)	–	(S)	**	–	****	*	H	–	00
1		2	3		4	5		6	7		8	9	10		11

1 Function
SV15 - Solenoid valve

2 Size
10 - 10 size

3 Seal material
Blank - Buna-N
V - Viton®

4 Style
O - Normally open

5 Manual override option
Blank - No manual override
P - Push type
S - Screw type

For valve dimensions with manual override option installed see page A-980.

6 Valve housing material
Blank - Cartridge only
S - Steel

7 Port size

Code	Port size	Housing number
0	Cartridge only	
2G	1/4" BSPP	02-175102
3G	3/8" BSPP	02-175103
6T	SAE 6	02-175100
8T	SAE 8	02-175101

See section J for housing details.

8 Voltage rating
00 - No coil
12D - 12VDC
24D - 24VDC
36D - 36VDC
24A - 24VAC
115A - 115VAC
230A - 230VAC
12B - 12VDC/w diode*
24A - 24VDC/w diode*

*Optional arc suppression diode.

9 Connector types
Blank - No coil
G - ISO 4400 DIN 43650
Q - Spade terminals
W - Leadwire
N - Deutsch (DC only)
Y - Amp JR (DC only)
D - Metripack 150 male (DC only)
J - Metripack 280 male (DC only)

10 Coil series
H - 10 series, 29W

For coil part numbers and dimensions see section C.

11 Special features
00 - None

(Only required if valve has special features, omitted if "00".)

Dimensions
mm (inch)

Cartridge only

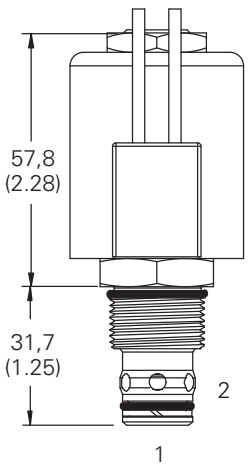

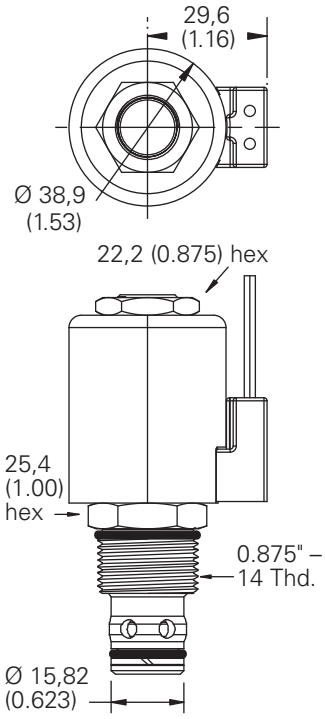

Torque cartridge in aluminum housing 68-75 Nm (50-55 ft lbs)

Note: When solenoid valve is ordered as cartridge only, nut is included.

Installation drawing

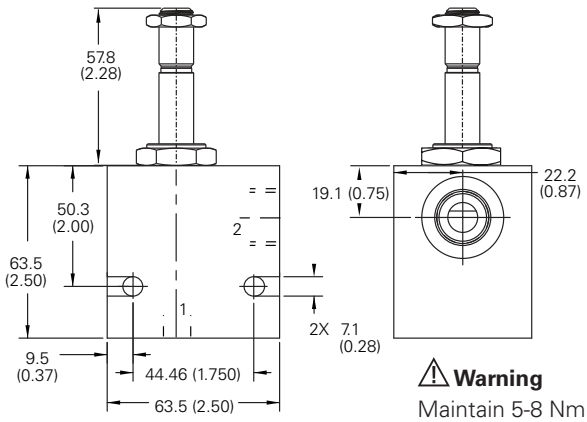

⚠ Warning
Maintain 5-8 Nm (4-6 ft lbs) maximum torque on valve tube nut.

Over tightening may cause valve failure.

Where measurements are critical request certified drawings. We reserve the right to change specifications without notice.

SV13-10-O/OP/OS - Solenoid valve

Poppet type, normally open solenoid valve (free reverse flow)
45 L/min (12 USgpm) • 350 bar (5000 psi)

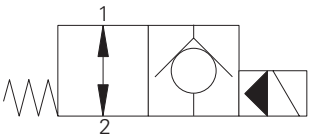

Operation

In the de-energized position the valve allows free flow in both directions.

When the solenoid is energized the pilot poppet closes the orifice and the valve closes blocking flow from port 2 to 1 while allowing free flow from port 1 to 2.

Features

Hardened and ground working parts. Lapped seat for low leakage. IP69K Tough coil compatibility. Continuously rated. Compact design with low pressure drop. 350 bar working pressure.

Sectional view

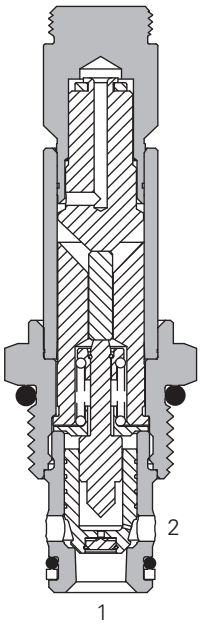

Performance data

Ratings and specifications

Performance data is typical with fluid at 21,8 cSt (105 SUS) and 49° C (120° F)	
Typical application pressure (all ports)	350 bar (5000 psi)
Cartridge fatigue pressure (infinite life)	310 bar (4500 psi)
Rated flow	45 L/min (12 USgpm)
Internal leakage	less than 5 drops/min, max @ 350 bar (5000 psi)
Temperature range	-40° to 100°C (-40° to 212°F)
Coil duty	Continuous from 85% to 110% of nominal voltage
Cavity	C-10-2
Fluids	All general purpose hydraulics fluids such as: MIL-H-5606, SAE 10, SAE 20 etc.
Filtration	Cleanliness code 18/**16/13**
Housing material (standard)	Steel
Weight including coil	0,18 kg (0.39 lbs)
Seal kit	565803 (Buna-N), 566086 (Viton®)

Viton is a registered trademark of E.I. DuPont

Description

This is a 2-way, 2-position, poppet type, high pressure, pilot operated, normally open solenoid valve. This valve is used in applications requiring low leakage, such as load holding applications or as a general purpose diverter or dump valve.

Application Note:

This valve is pilot operated and requires a minimum flow of 1-2 L/min (0.3-0.5 USgpm) in order to shift. For operation at very low flow conditions contact your Eaton representative.

Pressure drop

Cartridge only

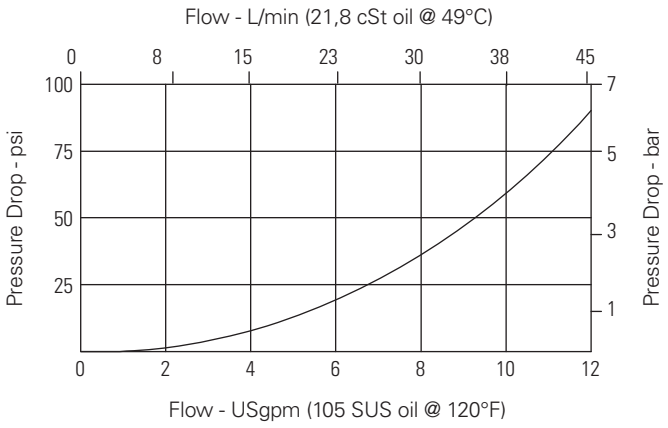

Port 1 to port 2 and port 2 to port 1 de-energized

Where measurements are critical request certified drawings. We reserve the right to change specifications without notice.

SV13-10-O/OP/OS - Solenoid valve

Poppet type, normally open solenoid valve (free reverse flow)
45 L/min (12 USgpm) • 350 bar (5000 psi)

Model code

SV13	–	10	(V)	–	O	(*)	–	(S)	**	–	****	*	H	–	00
1		2	3		4	5		6	7		8	9	10		11

1 Function
SV13 - Solenoid valve

2 Size
10 - 10 size

3 Seal material
Blank - Buna-N
V - Viton®

4 Style
O - Normally open

5 Manual override option
Blank - No manual override
P - Push type
S - Screw type

For valve dimensions with manual override option installed see page A-980.

6 Valve housing material
Blank - Cartridge only
S - Steel

7 Port size

Code	Port size	Housing number
0	Cartridge only	
2G	1/4" BSPP	02-175102
3G	3/8" BSPP	02-175103
6T	SAE 6	02-175100
8T	SAE 8	02-175101

See section J for housing details.

8 Voltage rating
00 - No coil
12D - 12VDC
24D - 24VDC
36D - 36VDC
24A - 24VAC
115A - 115VAC
230A - 230VAC
12B - 12VDC/w diode*
24B - 24VDC/w diode*

*Optional arc suppression diode.

9 Connector types
Blank - No coil
G - ISO 4400 DIN 43650
Q - Spade terminals
W - Flying lead
N - Deutsch (DC only)
Y - Amp JR (DC only)
D - Metripack 150 male (DC only)
J - Metripack 280 male (DC only)

10 Coil series
H - 10 series, 29W

For coil part numbers and dimensions see section C.

11 Special features
00 - None

(Only required if valve has special features, omitted if "00".)

Dimensions
mm (inch)

Cartridge only

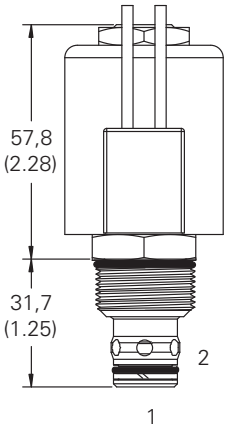

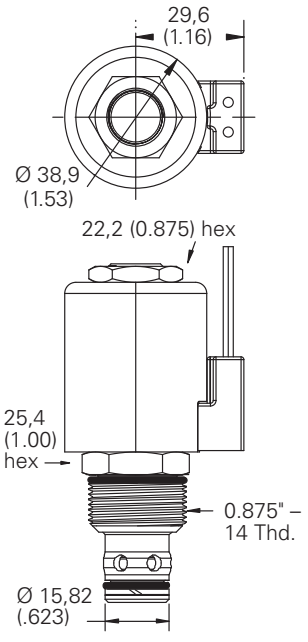

Torque cartridge in steel housing 68-75 Nm (50-55 ft lbs)

Note: When solenoid valve is ordered as cartridge only, nut is included.

Installation drawing

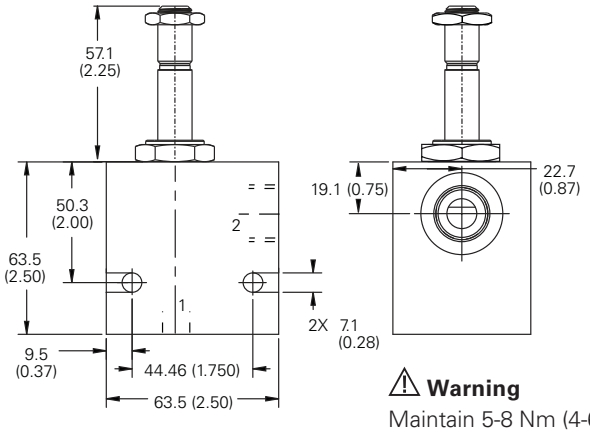

⚠ Warning
Maintain 5-8 Nm (4-6 ft lbs) maximum torque on valve tube nut.

Over tightening may cause valve failure.

Where measurements are critical request certified drawings. We reserve the right to change specifications without notice.

SBV11-10-O - Solenoid Bi-directional valve

Bi-directional, normally open solenoid valve
76 L/min (20 USgpm) • 350 bar (5000 psi)

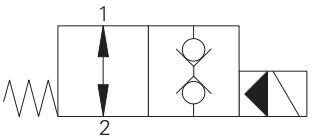

Operation

IIn the de-energized position the valve is open in both directions. A series of internal check valves allows full flow in both directions.

When the solenoid is energized the pilot poppet closes the pilot orifice causing the main poppet to close.

Features

Hardened and ground working parts. Lapped seat for low leakage. IP69K Tough coil compatibility. Continuously rated. Compact design with low pressure drop. 350 bar working pressure.

Sectional view

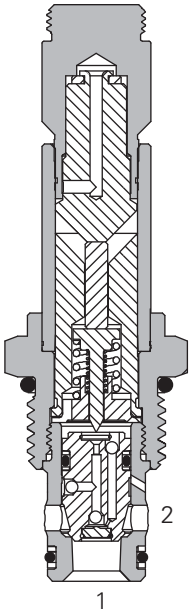

Performance data

Ratings and specifications

Performance data is typical with fluid at 21,8 cSt (105 SUS) and 49° C (120° F)	
Typical application pressure (all ports)	350 bar (5000 psi)
Cartridge fatigue pressure (infinite life)	310 bar (4500 psi)
Rated flow	76 L/min (20 USgpm)
Internal leakage, port 1 to port 2 or port 2 to port 1	5 drops/min, max @ 350 bar (5000 psi)
Temperature range	-40° to 100°C (-40° to 212°F)
Coil duty	Continuous from 85% to 110% of nominal voltage
Cavity	C-10-2
Fluids	All general purpose hydraulics fluids such as: MIL-H-5606, SAE 10, SAE 20 etc.
Filtration	Cleanliness code 18/**16/13**
Housing material (standard)	Aluminum or Steel
Weight including coil	0,18 kg (0.39 lbs)
Seal kit	565806 (Buna-N), 889627 (Viton®)

Viton is a registered trademark of E.I. DuPont

Description

This is a 2-way 2-position, high pressure bi-directional, pilot operated, normally open poppet type screw in cartridge valve. The valve is ideal for isolating and holding actuators in position.

Pressure drop

Cartridge only

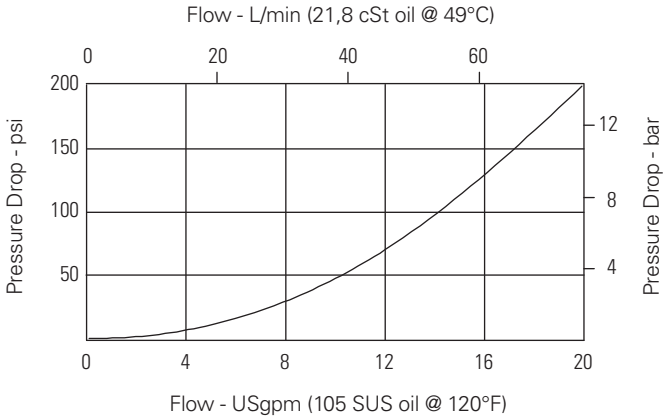

Port 1 to port 2 or port 2 to port 1 de-energized

Where measurements are critical request certified drawings. We reserve the right to change specifications without notice.

SBV11-10-O - Solenoid Bi-directional valve

Bi-directional, normally open solenoid valve
76 L/min (20 USgpm) • 350 bar (5000 psi)

Model code

SBV11	–	10	(V)	–	O	–	(*)	**	–	****	*	H	–	00
1		2	3		4		5	6		7	8	9		10

1 Function

SBV11 - Solenoid bi-directional valve

2 Size

10 - 10 size

3 Seal material

Blank - Buna-N

V - Viton®

4 Style

O - Normally open

5 Valve housing material

Blank - Cartridge only
A - Aluminum
S - Steel

6 Port size

Code	Port size	Housing number	
		Aluminium	Steel
0	Cartridge only		
2G	1/4" BSPP	876702	02-175102
3G	3/8" BSPP	876703	02-175103
3B	3/8" BSPP	02-175462*	–
6H	SAE 6	876700	–
6T	SAE 6	566151*	02-175100
8H	SAE 8	876701	–
8T	SAE 8	–	02-175101

*Light duty housing.
See section J for housing details.

7 Voltage rating

00 - No coil
12D - 12VDC
24D - 24VDC
36D - 36VDC
24A - 24VAC
115A - 115VAC
230A - 230VAC
12B - 12VDC/w diode*
24B - 24VDC/w diode*

*Optional arc suppression diode.

8 Connector types

Blank - No coil
G - ISO 4400 DIN 43650
Q - Spade terminals
W - Flying lead
N - Deutsch (DC only)
Y - Amp JR (DC only)
D - Metripack 150 male (DC only)
J - Metripack 280 male (DC only)

9 Coil series

H - 10 series, 29W

For coil part numbers and dimensions see section C.

10 Special features

00 - None

(Only required if valve has special features, omitted if "00".)

Dimensions

mm (inch)

Torque cartridge in housing
A - 47-54 Nm (35-40 ft lbs)
S - 68-75 Nm (50-55 ft lbs)

Note: When solenoid valve is ordered as cartridge only, coil nut is included.

Cartridge only

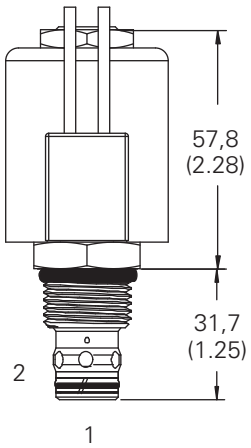

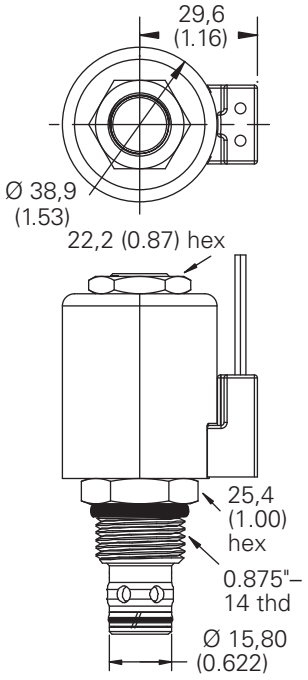

Installation drawing (Steel)

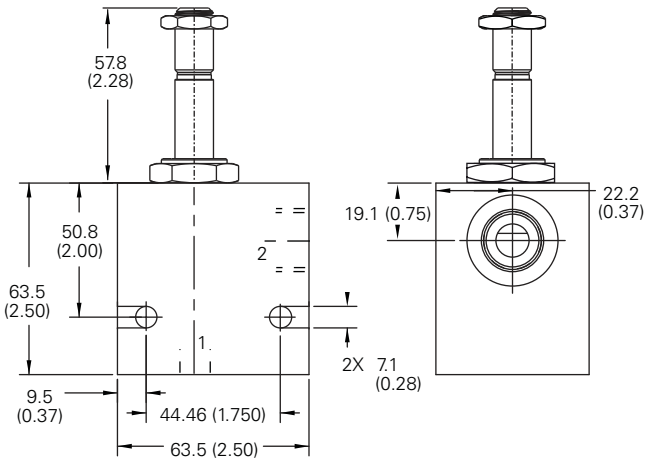

⚠ Warning

Maintain 5-8 Nm (4-6 ft lbs) maximum torque on valve tube nut.

Over tightening may cause valve failure.

⚠ Warning

Aluminum housings can be used for pressures up to 210 bar (3000 psi). Steel housings must be used for operating pressures above 210 bar (3000 psi).

Where measurements are critical request certified drawings. We reserve the right to change specifications without notice.

SV3-12-O/OP/OS - Solenoid valve

Poppet type, normally open solenoid valve
114 L/min (30 USgpm) • 210 bar (3000 psi)

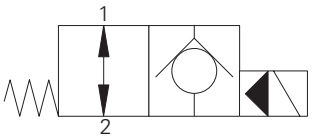

Operation

In the de-energized position the valve allows free flow in both directions.

When the solenoid is energized the pilot poppet closes the orifice and the valve closes blocking flow from port 2 to 1 while allowing free flow from port 1 to 2.

Features

Hardened and ground working parts. Lapped seat for low leakage. IP69K Tough coil compatibility. Continuously rated. Compact design with low pressure drop.

Sectional view

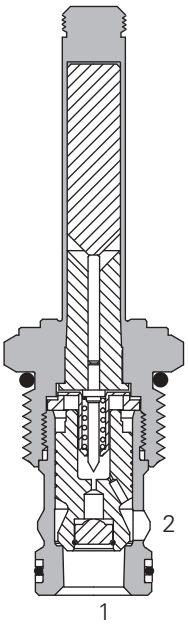

Performance data

Ratings and specifications

Performance data is typical with fluid at 21,8 cSt (105 SUS) and 49° C (120° F)	
Typical application pressure (all ports)	210 bar (3000 psi)
Cartridge fatigue pressure (infinite life)	210 bar (3000 psi)
Rated flow	114 L/min (30 USgpm)
Internal leakage, port 2 to port 1	less than 5 drops/min, max @ 210 bar (3000 psi)
Temperature range	-40° to 120°C (-40° to 248°F)
Coil duty	Continuous from 85% to 110% of nominal voltage
Cavity	C-12-2 or C-12-2U Add "U" after number if undercut is required. If undercut is not specified, expect 10 psi@15 USgpm and 20 psi @ 30 USgpm higher pressure drop.
Fluids	All general purpose hydraulics fluids such as: MIL-H-5606, SAE 10, SAE 20 etc.
Filtration	Cleanliness code 17/**15/12**
Housing material (standard)	Aluminum
Weight including coil	0,336 kg (0.74 lbs)
Seal kit	02-165889 (Buna-N), 02-165888 (Viton®)

Viton is a registered trademark of E.I. DuPont

Description

This is a 2-way, 2-position, poppet type, pilot operated, normally open solenoid valve. This valve is used in applications requiring low leakage, such as load holding applications or as a general purpose diverter or dump valve.

Pressure drop

Cartridge only

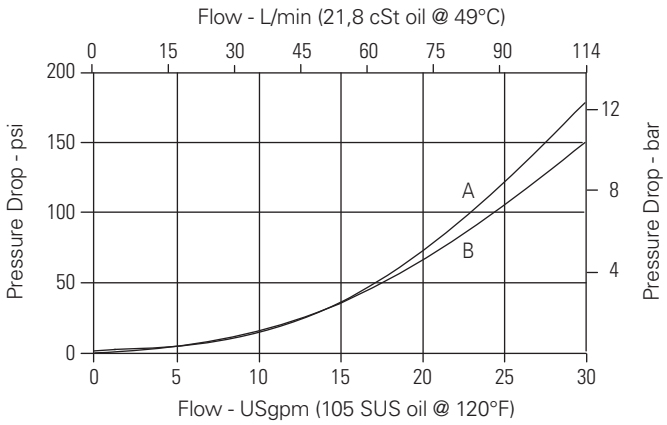

A - Port 2 to port 1 de-energized
B - Port 1 to port 2 energized

Where measurements are critical request certified drawings. We reserve the right to change specifications without notice.

SV3-12-O/OP/OS - Solenoid valve

Poppet type, normally open solenoid valve
114 L/min (30 USgpm) • 210 bar (3000 psi)

Model code

SV3 – 12 (V) – O (*) – (A) *(U) – **** * – 00**

1 2 3 4 5 6 7 8 9 10

1 Function
SV3 - Solenoid valve

2 Size
12 - 12 size

3 Seal material
Blank - Buna-N
V - Viton®

4 Style
O - Normally open

5 Manual override option
Blank - No manual override
P - Push type
S - Screw type

For valve dimensions with manual override option installed see page A-980.

6 Valve housing material
Omit for cartridge only
A - Aluminum

7 Port size

Code	Port size	Housing number	Cavity
0	Cartridge only		
4G	1/2" BSPP	02-161118	C-12-2
6G	3/4" BSPP	02-161117	C-12-2
10T	SAE 10	02-160640	C-12-2
12T	SAE 12	02-160644	C-12-2
4GU	1/2" BSPP	02-161116	C-12-2U
6GU	3/4" BSPP	02-161115	C-12-2U
10TU	SAE 10	02-160641	C-12-2U
12TU	SAE 12	02-160645	C-12-2U

See section J for housing details.

8 Voltage rating
00 - No coil
12D - 12VDC
24D - 24VDC
36D - 36VDC
24A - 24VAC
115A - 115VAC
230A - 230VAC
12B - 12VDC/w diode*
24B - 24VDC/w diode*

*Optional arc suppression diode.

9 Connector types
Blank - No coil
G - ISO 4400 DIN 43650
Q - Spade terminals
W - Flying lead
N - Deutsch (DC only)
Y - Amp JR (DC only)
D - Metripack 150 male (DC only)
J - Metripack 280 male (DC only)

For dimensions see section C.

10 Special features
00 - None

(Only required if valve has special features, omitted if "00.")

Dimensions
mm (inch)

Cartridge only

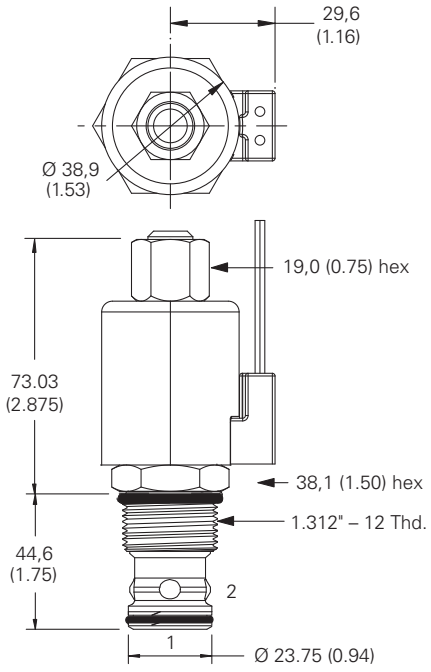

Torque cartridge in aluminum housing 81-95 Nm (60-70 ft lbs)

Note: Use J series, 23 W coils with this solenoid valve.

Installation drawing

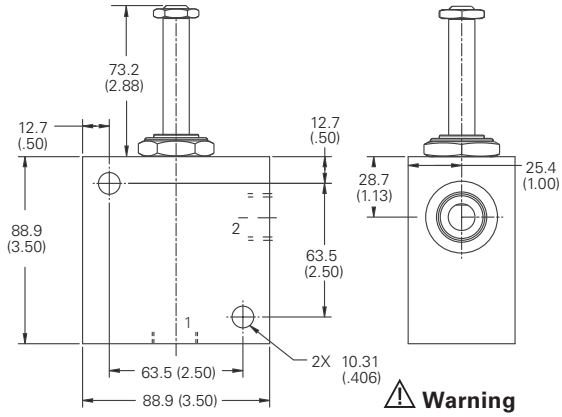

Note: When solenoid valve is ordered as cartridge only, coil nut is included.

⚠ Warning

Maintain 5-8 Nm (4-6 ft lbs) maximum torque on valve tube nut.

Over tightening may cause valve failure.

Where measurements are critical request certified drawings. We reserve the right to change specifications without notice.

SV13-12-O/OP/OS - Solenoid valve

Poppet type, normally open solenoid valve
114 L/min (30 USgpm) • 350 bar (5000 psi)

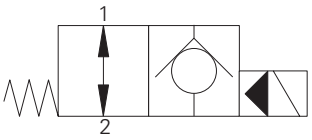

Operation

In the de-energized position the valve allows free flow in both directions.

When the solenoid is energized the pilot poppet closes the orifice and the valve closes blocking flow from port 2 to 1 while allowing free flow from port 1 to 2.

Features

Hardened and ground working parts. Lapped seat for low leakage. IP69K Tough coil compatibility. Continuously rated. Compact design with low pressure drop. 350 bar working pressure.

Sectional view

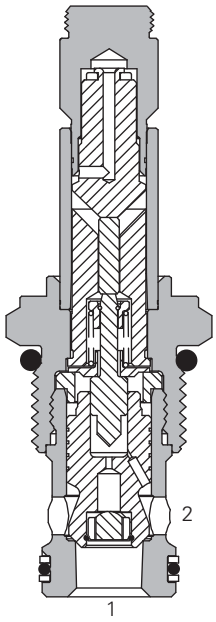

Performance data

Ratings and specifications

Performance data is typical with fluid at 21,8 cSt (105 SUS) and 49° C (120° F)	
Typical application pressure (all ports)	350 bar (5000 psi)
Cartridge fatigue pressure (infinite life)	310 bar (4500 psi)
Rated flow	114 L/min (30 USgpm)
Internal leakage	less than 5 drops/min, max @ 350 bar (5000 psi)
Temperature range	-40° to 100°C (-40° to 212°F)
Coil duty	Continuous from 85% to 110% of nominal voltage
Cavity	C-12-2 or C-12-2U Add "U" after number if undercut is required. If undercut is not specified, expect 10 psi@15 USgpm and 20 psi @ 30 USgpm higher pressure drop.
Fluids	All general purpose hydraulics fluids such as: MIL-H-5606, SAE 10, SAE 20 etc.
Filtration	Cleanliness code 18/**16/13**
Housing material (standard)	Steel
Weight including coil	0,27 kg (0.59 lbs)
Seal kit	02-165889 (Buna-N), 02-165888 (Viton®)

Viton is a registered trademark of E.I. DuPont

Description

This is a 2-way, 2-position, poppet type, high pressure, pilot operated, normally open solenoid valve. This valve is used in applications requiring low leakage, such as load holding applications or as a general purpose diverter or dump valve.

Application Note:

This value is pilot operated and requires a minimum flow of 1-2 L/min (0.3-0.5 USgpm) in order to shift. For operation at very low flow conditions contact your Eaton representative.

Pressure drop

Cartridge only

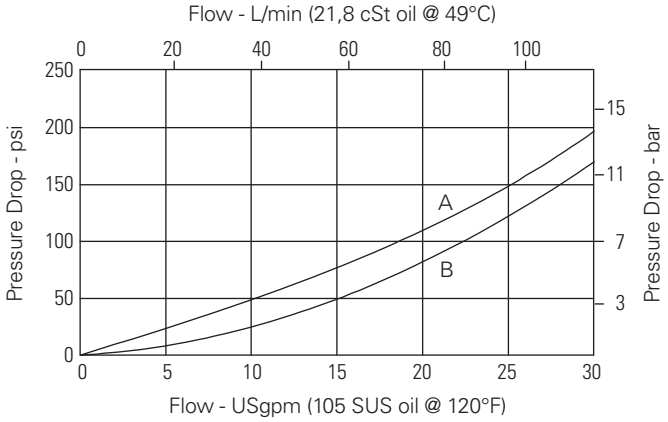

A - Port 1 to port 2 de-energized
B - Port 2 to port 1 de-energized

Where measurements are critical request certified drawings. We reserve the right to change specifications without notice.

SV13-12-O/OP/OS - Solenoid valve

Poppet type, normally open solenoid valve
114 L/min (30 USgpm) • 350 bar (5000 psi)

Model code

SV13	–	12	(V)	–	O	(*)	–	(S)	**	–	****	*	H	–	00
1		2	3		4	5		6	7		8	9	10		11

1 Function
SV13 - Solenoid valve

2 Size
12 - 12 size

3 Seal material
Blank - Buna-N
V - Viton®

4 Style
O - Normally open

5 Manual override option
Blank - No manual override
P - Push type
S - Screw type

For valve dimensions with manual override option installed see page A-980.

6 Valve housing material
Blank - Cartridge only
S - Steel

7 Port size

Code	Port size	Housing number
0	Cartridge only	
4G	1/2" BSPP	02-175062
4GU	1/2" BSPP	02-172512
6G	3/4" BSPP	02-169665
6GU	3/4" BSPP	02-162922
10T	SAE 10	02-169744
10TU	SAE 10	02-169817
12T	SAE 12	02-169782
12TU	SAE 12	02-169790

See section J for housings.

8 Voltage rating
00 - No coil
12D - 12VDC
24D - 24VDC
36D - 36VDC
24A - 24VAC
115A - 115VAC
230A - 230VAC
12B - 12VDC/w diode*
24B - 24VDC/w diode*

*Optional arc suppression diode.

9 Connector types
Blank - No coil
G - ISO 4400 DIN 43650
Q - Spade terminals
W - Flying lead
N - Deutsch (DC only)
Y - Amp JR (DC only)
D - Metripack 150 male (DC only)
J - Metripack 280 male (DC only)

10 Coil series
H - 10 series, 29 W

For coil dimensions see section C.

11 Special features
00 - None

(Only required if valve has special features, omitted if "00.")

Dimensions
mm (inch)

Cartridge only

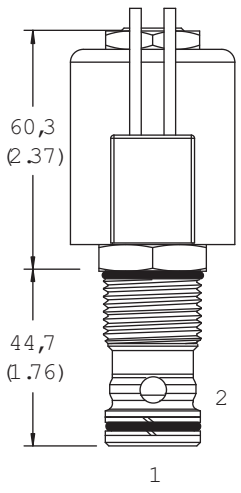

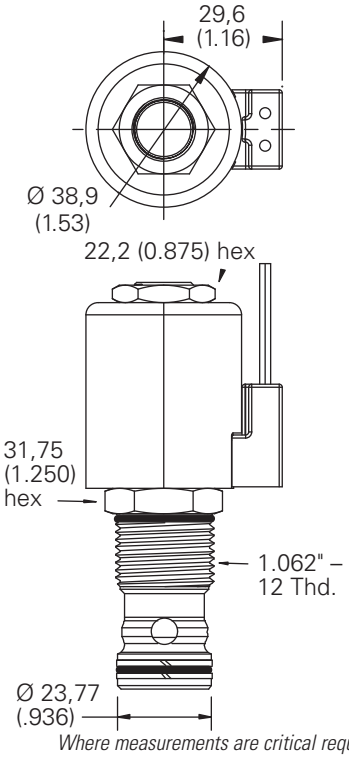

Torque cartridge in steel housing
102-115 Nm (75-85 ft lbs)

Note: When solenoid valve is ordered as cartridge only, coil nut is included.

Installation drawing

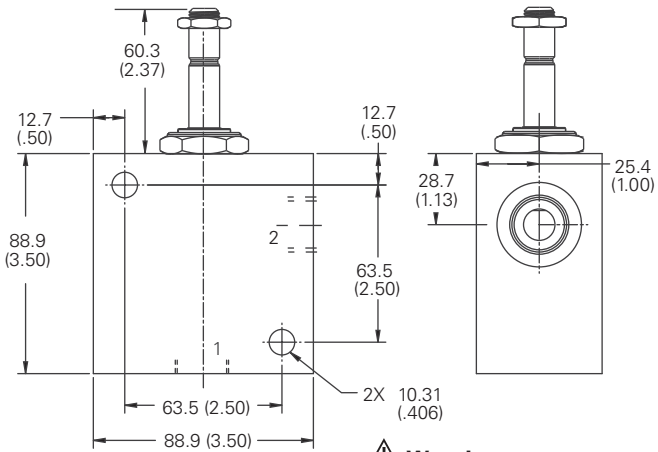

⚠ Warning
Maintain 5-8 Nm (4-6 ft lbs) maximum torque on valve tube nut.

Over tightening may cause valve failure.

Where measurements are critical request certified drawings. We reserve the right to change specifications without notice.

SBV11-12-O - Solenoid valve

Bi-directional, poppet type, normally open solenoid valve
114 L/min (30 USgpm) • 350 bar (5000 psi)

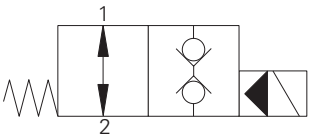

Operation

In the de-energized position the valve is open in both directions. A series of internal check valves allows full flow in both directions.

When the solenoid is energized the pilot poppet closes the pilot orifice causing the main poppet to close.

Features

Hardened and ground working parts. Lapped seat for low leakage. IP69K Tough coil compatibility. Continuously rated. Compact design with low pressure drop. 350 bar working pressure.

Sectional view

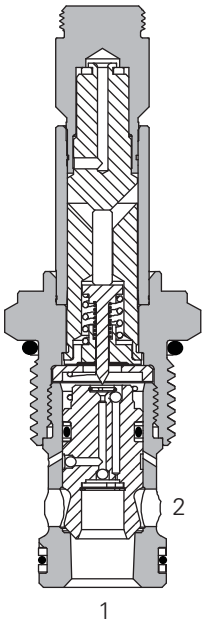

Performance data

Ratings and specifications

Performance data is typical with fluid at 21,8 cSt (105 SUS) and 49° C (120° F)	
Typical application pressure (all ports)	350 bar (5000 psi)
Cartridge fatigue pressure (infinite life)	310 bar (4500 psi)
Rated flow	114 L/min (30 USgpm)
Internal leakage	5 drops/min, max @ 350 bar (5000 psi)
Temperature range	-40° to 100°C (-40° to 212°F)
Coil duty	Continuous from 85% to 110% of nominal voltage
Cavity	C-12-2 or C-12-2U Add "U" after number if undercut is required. If undercut is not specified, expect 10 psi@15 USgpm and 20 psi @ 30 USgpm higher pressure drop.
Fluids	All general purpose hydraulics fluids such as: MIL-H-5606, SAE 10, SAE 20 etc.
Filtration	Cleanliness code 18/**16/13**
Housing material (standard)	Aluminum or steel
Weight including coil	0,27 kg (0.59 lbs)
Seal kit	02-165889 (Buna-N), 02-165888 (Viton®)

Viton is a registered trademark of E.I. DuPont

Description

This is a 2-way 2-position, high pressure bi-directional, pilot operated, normally open poppet type screw in cartridge valve. The valve is ideal for isolating and holding actuators in position.

Pressure drop

Cartridge only

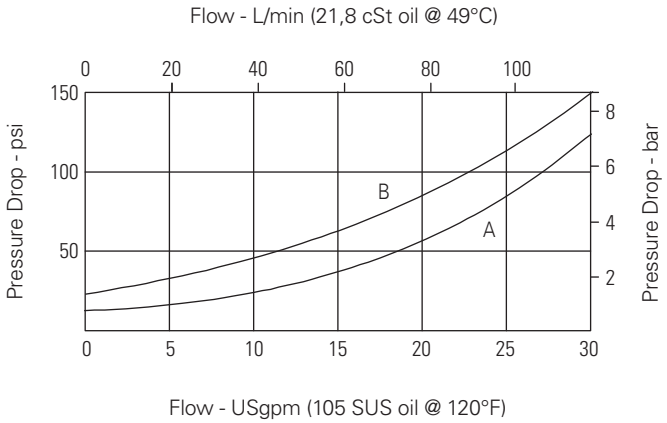

A - Port 1 to port 2
B - Port 2 to port 1

Where measurements are critical request certified drawings. We reserve the right to change specifications without notice.

SBV11-12-O - Solenoid valve

Bi-directional, poppet type, normally open solenoid valve
114 L/min (30 USgpm) • 350 bar (5000 psi)

Model code

SBV11 – 12 (V) – O – (*) ** – ** * – H**

1 2 3 4 5 6 7 8 9

1 Function
SBV11 - Solenoid bi-directional valve

2 Size
12 - 12 size

3 Seal material
Blank - Buna-N
V - Viton®

4 Style
O - Normally open

5 Valve housing material
Blank - Cartridge only
A - Aluminum
S - Steel

6 Port size

Code	Port size	Housing number	
		Aluminium	Steel
0	Cartridge only		
4G	1/2" BSPP	02-161118	02-172062
4GU	1/2" BSPP	02-161116	02-172512
6G	3/4" BSPP	02-161117	02-169665
6GU	3/4" BSPP	02-161115	02-162922
10T	SAE 10	02-160640	02-169744
10TU	SAE 10	02-160641	02-169817
12T	SAE 12	02-160644	02-169782
12TU	SAE 12	02-160645	02-169790

See section J for housings.

7 Voltage rating
00 - No coil
12D - 12VDC
24D - 24VDC
36D - 36VDC
24A - 24VAC
115A - 115VAC
230A - 230VAC
12B - 12VDC/w diode*
24B - 24VDC/w diode*
*Optional arc suppression diode.

Torque cartridge in housing
A - 81-95 Nm (60-70 ft lbs)
S - 102-115 Nm (75-85 ft lbs)

8 Connector types
Blank - No coil
G - ISO 4400 DIN 43650
Q - Spade terminals
W - Flying lead
N - Deutsch (DC only)
Y - Amp JR (DC only)
D - Metripack 150 male (DC only)
J - Metripack 280 male (DC only)

9 Coil series
H - 10 series, 29 W

For coil dimensions see section C.

10 Special features
00 - None

(Only required if valve has special features, omitted if "00.")

Note: When solenoid valve is ordered as cartridge only, coil nut is included.

Dimensions
mm (inch)

Cartridge only

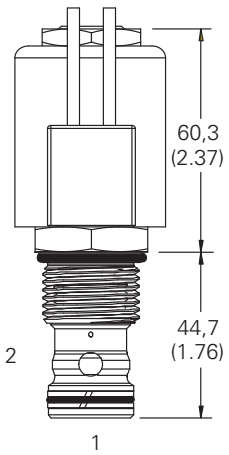

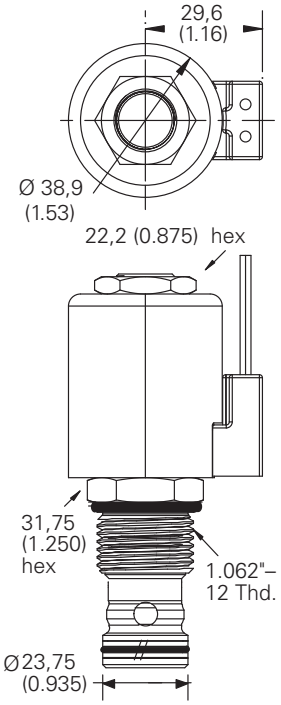

Installation drawing (Steel)

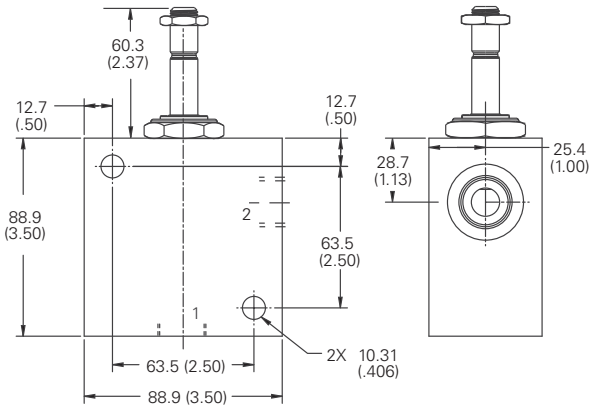

⚠ Warning
Maintain 5-8 Nm (4-6 ft lbs) maximum torque on valve tube nut.

Over tightening may cause valve failure.

⚠ Warning
Aluminum housings can be used for pressures up to 210 bar (3000 psi). Steel housings must be used for operating pressures above 210 bar (3000 psi).

Where measurements are critical request certified drawings. We reserve the right to change specifications without notice.

SV3-16-O/OP/OS - Solenoid valve

Poppet type, normally open solenoid valve
132 L/min (35 USgpm) • 210 bar (3000 psi)

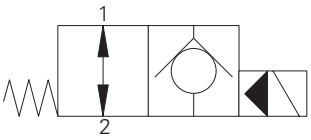

Operation

In the de-energized position the valve allows free flow in both directions.

When the solenoid is energized the pilot poppet closes the orifice and the valve closes blocking flow from port 2 to 1 while allowing free flow from port 1 to 2.

Features

Hardened and ground working parts. Lapped seat for low leakage. IP69K Tough coil compatibility. Continuously rated. Compact design with low pressure drop.

Sectional view

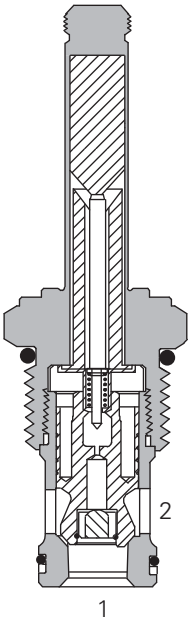

Performance data

Ratings and specifications

Performance data is typical with fluid at 21,8 cSt (105 SUS) and 49° C (120° F)	
Typical application pressure (all ports)	210 bar (3000 psi)
Cartridge fatigue pressure (infinite life)	210 bar (3000 psi)
Rated flow	132 L/min (35 USgpm)
Internal leakage, port 2 to port 1	less than 5 drops/min, max @ 210 bar (3000 psi)
Temperature range	-40° to 120°C (-40° to 248°F)
Coil duty	Continuous from 85% to 110% of nominal voltage
Cavity	C-16-2
Fluids	All general purpose hydraulics fluids such as: MIL-H-5606, SAE 10, SAE 20 etc.
Filtration	Cleanliness code 18/**16/13**
Housing material (standard)	Aluminum
Weight including coil	0,9 kg (1.98 lbs)
Seal kit	565810 (Buna-N), 889609 (Viton®)

Viton is a registered trademark of E.I. DuPont

Description

This is a 2-way, 2-position, poppet type, pilot operated, normally open solenoid valve. This valve is used in applications requiring low leakage, such as load holding applications or as a general purpose diverter or dump valve.

Pressure drop

Cartridge only

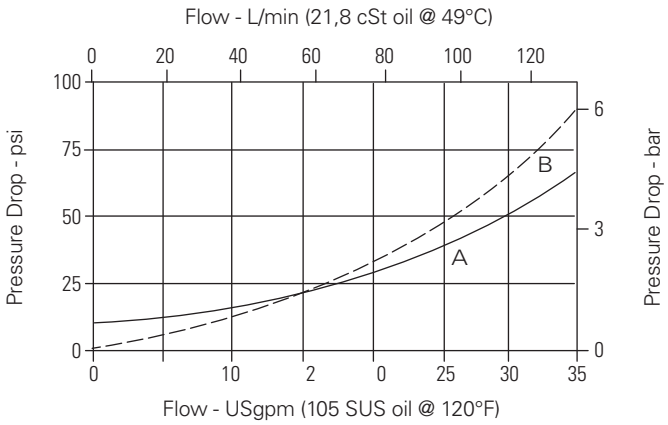

A - Port 1 to port 2 energized
B - Port 2 to port 1 de-energized

Where measurements are critical request certified drawings. We reserve the right to change specifications without notice.

SV3-16-O/OP/OS - Solenoid valve

Poppet type, normally open solenoid valve
132 L/min (35 USgpm) • 210 bar (3000 psi)

Model code

SV3	–	16	(V)	–	O	(*)	–	(A)	***	–	****	*	–	00
1		2	3		4	5		6	7		8	9		10

1 Function
SV3 - Solenoid valve

2 Size
16 - 16 size

3 Seal material
Blank - Buna-N
V - Viton®

4 Style
O - Normally open

5 Manual override option
Blank - No manual override
P - Push type
S - Screw type

For valve dimensions with manual override option installed see page A-980.

6 Valve housing material
Omit for cartridge only
A - Aluminum

7 Port size

Code	Port size	Housing number
0	Cartridge only	
6B	3/4" BSPP	02-175463*
12T	SAE 12	566149*
6G	3/4" BSPP	876718
10H	SAE 10	876717
12H	SAE 12	566113

*Light duty housing
See section J for housings.

8 Voltage rating
00 - No coil
12D - 12VDC
24D - 24VDC
36D - 36VDC
24A - 24VAC
115A - 115VAC
230A - 230VAC
12B - 12VDC/w diode*
24B - 24VDC/w diode*

*Optional arc suppression diode.

9 Connector types
Blank - No coil
G - ISO 4400 DIN 43650
Q - Spade terminals
W - Flying lead
N - Deutsch (DC only)
Y - Amp JR (DC only)
D - Metripack 150 male (DC only)
J - Metripack 280 male (DC only)

For coil dimensions see section C.

10 Special features
00 - None

(Only required if valve has special features, omitted if "00.")

Dimensions
mm (inch)

Cartridge only

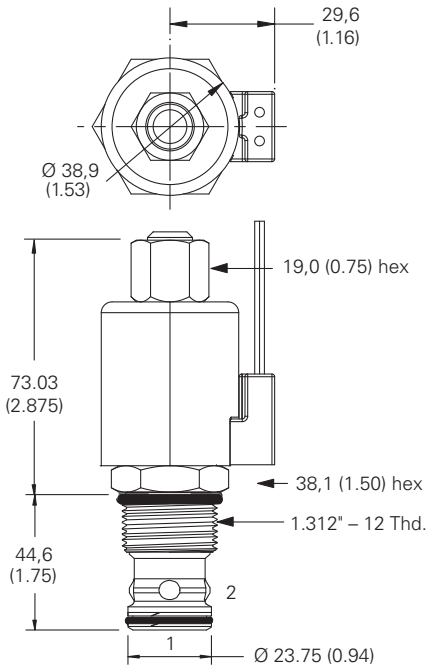

Torque cartridge in aluminum housing 108-122 Nm (80-90 ft lbs)

Note: When solenoid valve is ordered as cartridge only, coil nut is included.

Note: When J series, 23 W coils with this solenoid valve.

Installation drawing

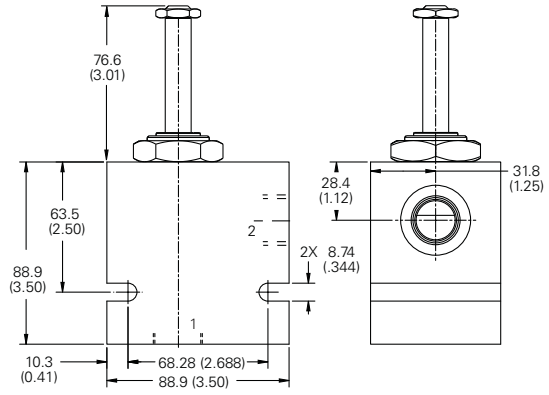

⚠ Warning
Maintain 5-8 Nm (4-6 ft lbs) maximum torque on valve tube nut.

Over tightening may cause valve failure.

Where measurements are critical request certified drawings. We reserve the right to change specifications without notice.

SV13-16-O/OP/OS - Solenoid valve

Poppet type normally open solenoid valve
132 L/min (35 USgpm) • 350 bar (5000 psi)

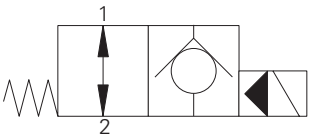

Operation

In the de-energized position the valve allows free flow in both directions.

When the solenoid is energized the pilot poppet closes the orifice and the valve closes blocking flow from port 2 to 1 while allowing free flow from port 1 to 2.

Features

Hardened and ground working parts. Lapped seat for low leakage. IP69K Tough coil compatibility. Continuously rated. Compact design with low Pressure drop. 350 bar working pressure.

Sectional view

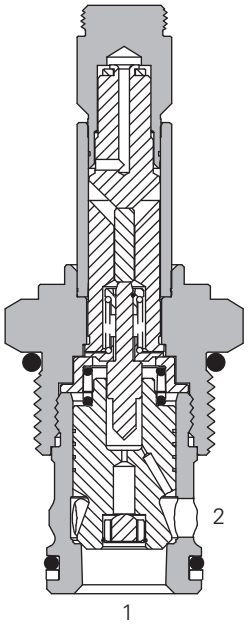

Performance data

Ratings and specifications

Performance data is typical with fluid at 21,8 cST (105 SUS) and 49°C (120°F)	
Typical application pressure (all ports)	350 bar (5000 psi)
Cartridge fatigue pressure (infinite life)	310 bar (4500 psi)
Rated flow	132 L/min (35 USgpm)
Internal leakage	less than 5 drops/min max @ 350 bar (5000 psi)
Temperature range	-40° to 100°C (-40° to 212°F)
Coil duty	Continuous from 85% to 110% of nominal voltage
Cavity	C-16-2
Fluids	All general purpose hydraulic fluids such as: MIL-H-5606, SAE 10, SAE 20 etc.
Filtration	Cleanliness code 18/**16/13**
Housing material (standard)	Steel
Weight Cartridge only	0,39 kg (0.85 lbs)
Seal kit	565810 (Buna-N), 889609 (Viton®)

Viton is a registered trademark of E.I. DuPont

Description

This is a 2-way, 2-position, poppet type, high pressure, pilot operated, normally open solenoid valve. This valve is used in applications requiring low leakage, such as load holding applications or as a general purpose diverter or dump valve.

Pressure drop

Cartridge only

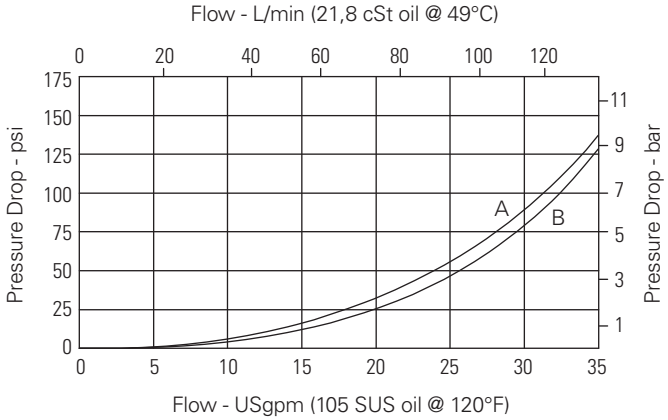

A - Port 2 to port 1 de-energized
B - Port 1 to port 2

Where measurements are critical request certified drawings. We reserve the right to change specifications without notice.

SV13-16-O/OP/OS - Solenoid valve

Poppet type normally open solenoid valve
132 L/min (35 USgpm) • 350 bar (5000 psi)

Model code

SV13	–	16	(V)	–	O	(*)	–	(S)	**	–	****	*	H	–	00
1		2	3		4	5		6	7		8	9	10		11

1 Function
SV13 - Solenoid valve

2 Size
16 - 16 size

3 Seal material
Blank - Buna-N
V - Viton®

4 Style
O - Normally open

5 Manual override option
Blank - No manual override
P - Push type
S - Screw type
For valve dimensions with manual override option installed see page A-980.

6 Valve housing material
Blank - Cartridge only
S - Steel

7 Port size

Code	Port size	Housing number
0	Cartridge only	
4G	1/2" BSPP	02-175106
6G	3/4" BSPP	02-175107
10T	SAE 10	02-175104
12T	SAE 12	02-175105

See section J for housing details.

8 Voltage rating
00 - No coil
12D - 12VDC
24D - 24VDC
36D - 36VDC
24A - 24VAC
115A - 115VAC
230A - 230VAC
12B - 12VDC/w diode*
24B - 24VDC/w diode*
*Optional arc suppression diode.

9 Connector types
Blank - No coil
G - ISO 4400 DIN 43650
Q - Spade terminals
W - Flying lead
N - Deutsch (DC only)
Y - Amp JR (DC only)
D - Metripack 150 male (DC only)
J - Metripack 280 male (DC only)

10 Coil series
H - 10 series, 29 W
For coil part numbers and dimensions see section C.

11 Special features
00 - None
(Only required if valve has Special features, omitted if "00".)

Dimensions
mm (inch)

Cartridge only

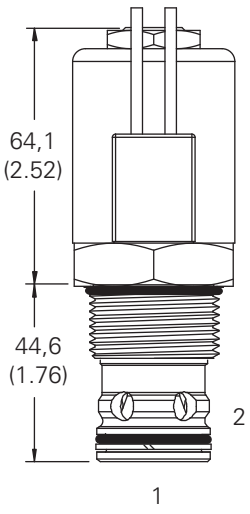

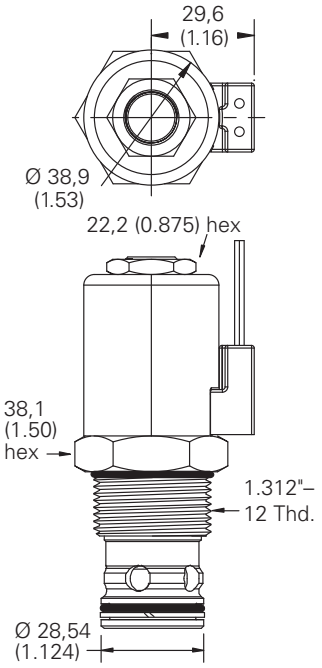

Torque cartridge in steel housing 136-149 Nm (100-110 ft lbs)

Installation drawing

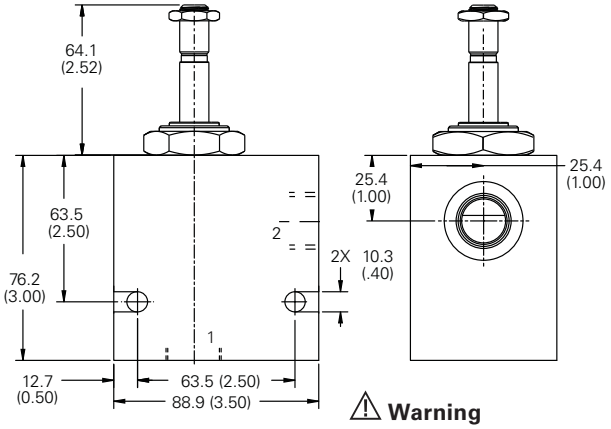

Note: When solenoid valve is ordered as Cartridge only, nut is included.

⚠ Warning
Maintain 5-8 Nm (4-6 ft lbs) maximum torque on valve tube nut.

Over tightening may cause valve failure.

Where measurements are critical request certified drawings. We reserve the right to change specifications without notice.

SV3-20-O/OP/OS - Solenoid valve

Poppet type, normally open solenoid valve
227 L/min (60 USgpm) • 210 bar (3000 psi)

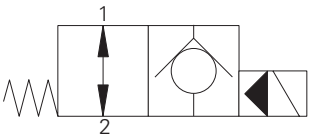

Operation

In the de-energized position the valve allows free flow in both directions.

When the solenoid is energized the pilot poppet closes the orifice and the valve closes blocking flow from port 2 to 1 while allowing free flow from port 1 to 2.

Features

Hardened and ground working parts. Lapped seat for low leakage. IP69K Tough coil compatibility. Continuously rated. Compact design with low Pressure drop.

Sectional view

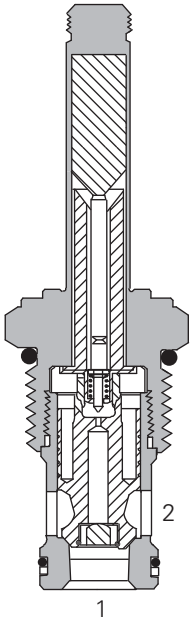

Performance data

Ratings and specifications

Performance data is typical with fluid at 21,8 cST (105 SUS) and 49°C (120°F)	
Typical application pressure (all ports)	210 bar (3000 psi)
Cartridge fatigue pressure (infinite life)	210 bar (3000 psi)
Rated flow	227 L/min (60 USgpm)
Internal leakage, port 2 to port 1	less than 5 drops/min max @ 210 bar (3000 psi)
Temperature range	-40° to 120°C (-40° to 248°F)
Coil duty	Continuous from 85% to 110% of nominal voltage
Response times (100% rated voltage and flow)	Energize: 75 ms De-Energize: 150 ms
Cavity	C-20-2
Fluids	All general purpose hydraulic fluids such as: MIL-H-5606, SAE 10, SAE 20 etc.
Filtration	Cleanliness code 18/16/13
Housing material (standard)	Aluminum
Weight including coil	1,2 kg (2.70 lbs)
Seal kit	889615 (Buna-N), 889619 (Viton®)

Viton is a registered trademark of E.I. DuPont

Description

This is a 2-way, 2-position, poppet type, pilot operated, normally open solenoid valve. This valve is used in applications requiring low leakage, such as load holding applications or as a general purpose diverter or dump valve.

Pressure drop

Cartridge only

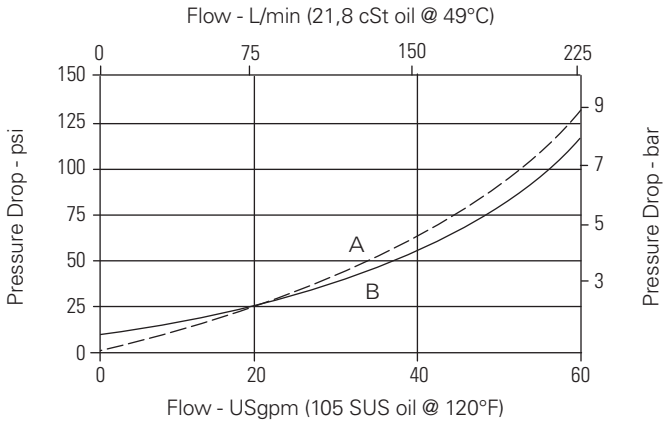

A - Port 2 to port 1 and port 1 to port 2 de-energized
B - Port 1 to port 2 energized

Where measurements are critical request certified drawings. We reserve the right to change specifications without notice.

SV3-20-O/OP/OS - Solenoid valve

Poppet type, normally open solenoid valve
227 L/min (60 USgpm) • 210 bar (3000 psi)

Model code

SV3 – 20 (V) – O (*) – * – **** * – 00**

1 2 3 4 5 6 7 8 9

1 Function
SV3 - Solenoid valve

2 Size
20 - 20 size

3 Seal material
Blank - Buna-N
V - Viton®

4 Style
O - Normally open

5 Manual override option
Blank - No manual override
P - Push type
S - Screw type

For valve dimensions with manual override option installed see page A-980

6 Port size

Code	Port size	Housing number
0	Cartridge only	
8B	1" BSPP	02-175464*
16T	SAE 16	566409*
6G	3/4" BSPP	876732
8G	1" BSPP	876734
12H	SAE 12	876733
16H	SAE 16	876735

*Light duty housing.
See section J for housing details.

7 Voltage rating
00 - No coil
12D - 12VDC
24D - 24VDC
36D - 36VDC
24A - 24VAC
115A - 115VAC
230A - 230VAC
12B - 12VDC/w diode*
24B - 24VDC/w diode*

*Optional arc suppression diode.

8 Connector types
Blank - No coil
G - ISO 4400 DIN 43650
Q - Spade terminals
W - Flying lead
N - Deutsch (DC only)
Y - Amp JR (DC only)
D - Metripack 150 male (DC only)
J - Metripack 280 male (DC only)

For coil dimensions see section C.

9 Special features
00 - None

(Only required if valve has Special features, omitted if "00".)

Note: Use J series, 23 W coils with this solenoid valve.

Dimensions
mm (inch)

Cartridge only

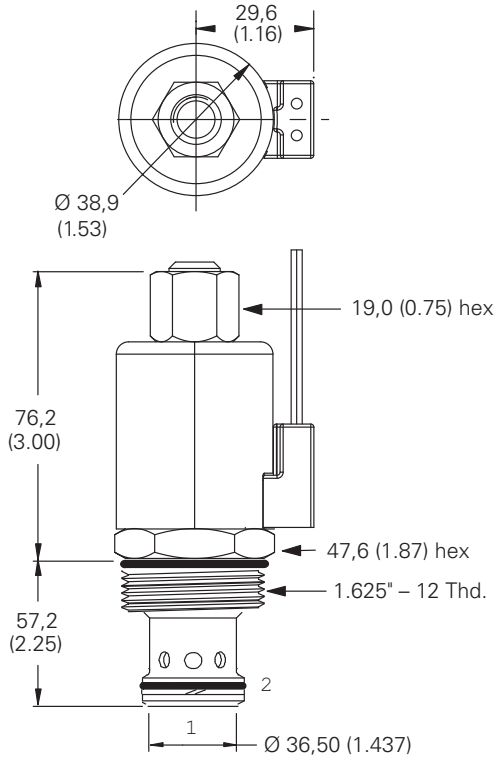

Torque cartridge in aluminum housing 128-155 Nm (95-115 ft lbs)

Note: When solenoid valve is ordered as Cartridge only, nut is included.

Installation drawings

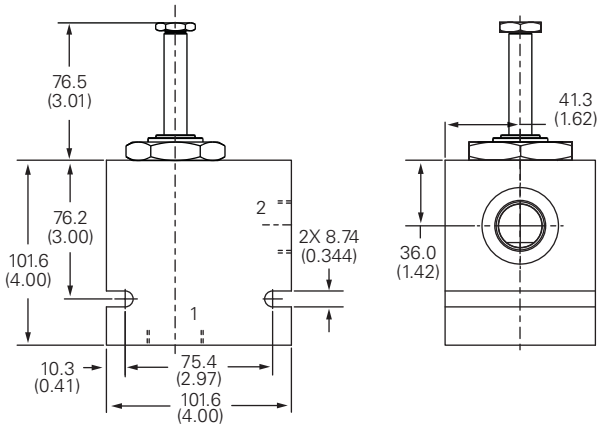

⚠ Warning
Maintain 5-8 Nm (4-6 ft lbs) maximum torque on valve tube nut. Over tightening may cause valve failure.

Where measurements are critical request certified drawings. We reserve the right to change specifications without notice.

SV13-20-O/OP/OS - Solenoid valve

Poppet type, normally open solenoid valve
227 L/min (60 USgpm) • 350 bar (5000 psi)

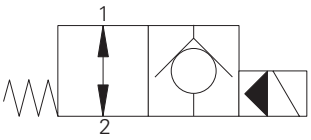

Operation

In the de-energized position the valve allows free flow in both directions.

When the solenoid is energized the pilot poppet closes the orifice and the valve closes blocking flow from port 2 to 1 while allowing free flow from port 1 to 2.

Features

Hardened and ground working parts. Lapped seat for low leakage. IP69K Tough coil compatibility. Continuously rated. Compact design with low Pressure drop. 350 bar working pressure.

Sectional view

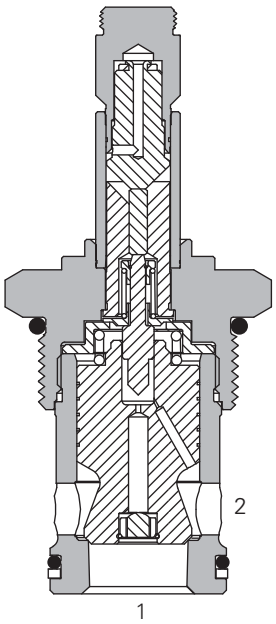

Performance data

Ratings and specifications

Performance data is typical with fluid at 21,8 cST (105 SUS) and 49°C (120°F)	
Typical application pressure (all ports)	350 bar (5000 psi)*
Cartridge fatigue pressure (infinite life)	310 bar (4500 psi)
Rated flow	227 L/min (60 USgpm)
Internal leakage, port 2 to port 1	less than 5 drops/min max @ 350 bar (5000 psi)
Temperature range	-40° to 100°C (-40° to 212°F)
Coil duty	Continuous from 85% to 110% of nominal voltage
Cavity	C-20-2
Fluids	All general purpose hydraulic fluids such as: MIL-H-5606, SAE 10, SAE 20 etc.
Filtration	Cleanliness code 18/**16/13**
Housing material (standard)	Steel
Weight Cartridge only	0,62 kg (1.37 lbs)
Seal kit	889615 (Buna-N), 889619 (Viton®)

*For application pressure over 280 bar (4000 psi) consult factory
Viton is a registered trademark of E.I. DuPont

Description

This is a 2-way, 2-position, poppet type, high pressure, pilot operated, normally open solenoid valve. This valve is used in applications requiring low leakage, such as load holding applications or as a general purpose diverter or dump valve.

Pressure drop

Cartridge only

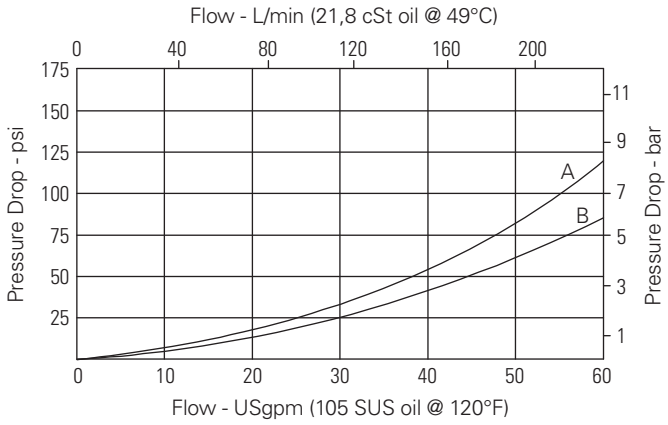

A - Port 2 to port 1 de-energized
B - Port 1 to port 2

Where measurements are critical request certified drawings. We reserve the right to change specifications without notice.

SV13-20-O/OP/OS - Solenoid valve

Poppet type, normally open solenoid valve
227 L/min (60 USgpm) • 350 bar (5000 psi)

Model code

SV13	–	20	(V)	–	O	(*)	–	(S)	***	–	****	*	H	–	00
1		2	3		4	5		6	7		8	9	10		11

1 Function
SV13 - Solenoid valve

2 Size
20 - 20 size

3 Seal material
Blank - Buna-N
V - Viton®

4 Style
O - Normally open

5 Manual override option
Blank - No manual override
P - Push type
S - Screw type

For valve dimensions with manual override option installed see page A-980.

6 Valve housing material
Blank - Cartridge only
S - Steel

7 Port size

Code	Port size	Housing number
0	Cartridge only	
6G	3/4" BSPP	02-175110
8G	1" BSPP	02-175111
12T	SAE 12	02-175108
16T	SAE 16	02-175109

See section J for housing details.

8 Voltage rating
00 - No coil
12D - 12VDC
24D - 24VDC
36D - 36VDC
24A - 24VAC
115A - 115VAC
230A - 230VAC
12B - 12VDC/w diode*
24B - 24VDC/w diode*

*Optional arc suppression diode.

9 Connector types
Blank - No coil
G - ISO 4400 DIN 43650
Q - Spade terminals
W - Flying lead
N - Deutsch (DC only)
Y - Amp JR (DC only)
D - Metripack 150 male (DC only)
J - Metripack 280 male (DC only)

10 Coil series
H - 10 series, 29 W

For coil part numbers and dimensions see section C.

11 Special features
00 - None

(Only required if valve has Special features, omitted if "00".)

Dimensions
mm (inch)

Cartridge only

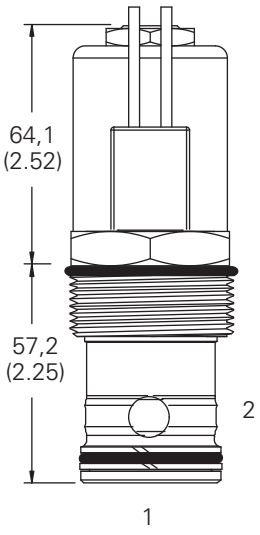

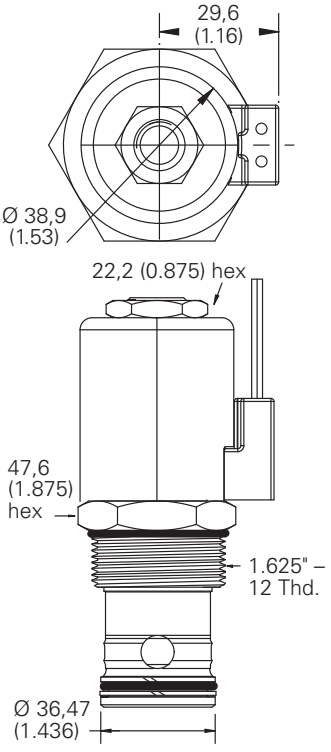

Torque cartridge in steel housing 163-183 Nm (120-135 ft lbs)

Installation drawing

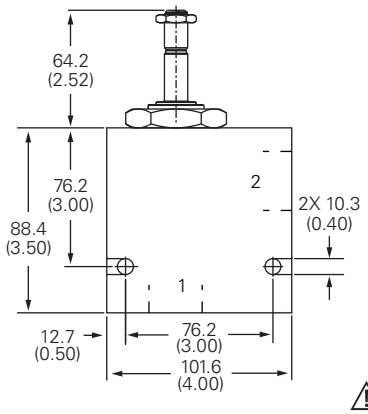

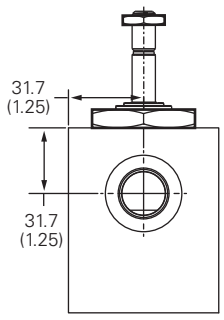

Note: When solenoid valve is ordered as Cartridge only, nut is included.

⚠ Warning
Maintain 5-8 Nm (4-6 ft lbs) maximum torque on valve tube nut.

Over tightening may cause valve failure.

Where measurements are critical request certified drawings. We reserve the right to change specifications without notice.

SV4-8-O/OM - Solenoid valve

Spool type, normally open solenoid valve
13 L/min (4 USgpm) • 210 bar (3000 psi)

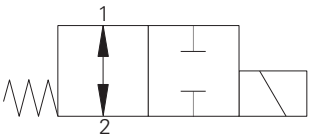

Operation

In the de-energized position the valve is open in both directions.

When the solenoid is energized the spool moves causing the valve to close in both directions.

Features

Hardened, ground and honed working parts to limit leakage. IP69 Tough coil compatibility. Continuously rated. Compact design with low Pressure drop.

Sectional view

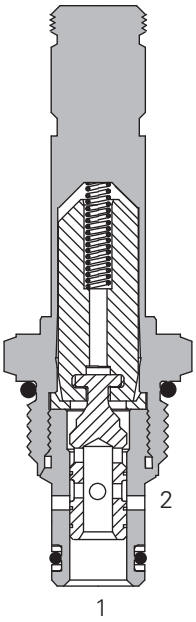

Performance data

Ratings and specifications

Performance data is typical with fluid at 21,8 cST (105 SUS) and 49°C (120°F)	
Typical application pressure (all ports)	210 bar (3000 psi)
Cartridge fatigue pressure (infinite life)	210 bar (3000 psi)
Rated flow	13 L/min (4 USgpm)
Internal leakage	82 cm3/min (5 in3/min) max @ 210 bar (3000 psi)
Temperature range	-40° to 120°C (-40° to 248°F)
Coil duty	Continuous from 85% to 110% of nominal voltage
Response times (100% rated voltage and flow)	Energize: 21 ms De-Energize: 38 ms
Cavity	C-8-2
Fluids	All general purpose hydraulic fluids such as: MIL-H-5606, SAE 10, SAE 20 etc.
Filtration	Cleanliness code 18/**16/13**
Housing material (standard)	Aluminum
Weight including coil	0,27 kg (0.60 lbs)
Seal kit	02-160777 (Buna-N), 02-160778 (Viton®)

Viton is a registered trademark of E.I. DuPont

Description

This is a 2-way, 2-position, spool type, direct acting, normally open solenoid valve. This valve is used in applications where the flow needs to be blocked in both directions when the solenoid is energized.

Pressure drop

Cartridge only

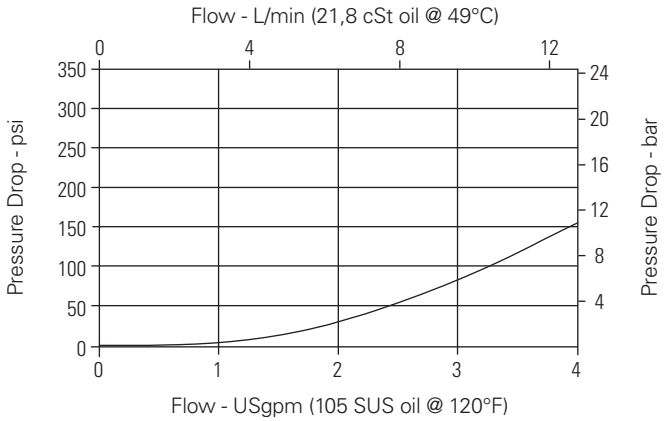

Port 2 to port 1 de-energized
Port 1 to port 2 de-energized

Where measurements are critical request certified drawings. We reserve the right to change specifications without notice.

SV4-8-O/OM - Solenoid valve

Spool type, normally open solenoid valve
13 L/min (4 USgpm) • 210 bar (3000 psi)

Model code

SV4	–	8	(V)	–	O	(M)	–	(F)	(A)	**	–	****	*	S	–	00
1		2	3		4	5		6	7	8		9	10	11		12

1 Function
SV4 - Solenoid valve

2 Size
8 - 8 size

3 Seal material
Blank - Buna-N
V - Viton®

4 Style
O - Normally open

5 Manual override option
Blank - No manual override
M - Knob type

For valve dimensions with manual override option installed see page A-980.

6 Filter option
Blank - None
F - Filter screen

7 Valve housing material
Omit for Cartridge only
A - Aluminum

8 Port size

Code	Port size	Housing number
0	Cartridge only	
2G	1/4" BSPP	02-160727
3G	3/8" BSPP	02-160728
4T	SAE 4	02-160730
6T	SAE 6	02-160731
8T	SAE 8	02-160732

See section J for housing details.

9 Voltage rating
00 - No coil
12D - 12VDC
24D - 24VDC
36D - 36VDC
24A - 24VAC
115A - 115VAC
230A - 230VAC
12B - 12VDC/w diode*
24B - 24VDC/w diode*

*Optional arc suppression diode.

10 Connector types
Blank - No coil
G - ISO 4400 DIN 43650
Q - Spade terminals
W - Flying lead
N - Deutsch (DC only)
Y - Amp JR (DC only)
D - Metripack 150 male (DC only)
J - Metripack 280 male (DC only)

11 Coil series
S - 8 series, 20 W

For coil part numbers and dimensions see section C.

12 Special features
00 - None

(Only required if valve has Special features, omitted if "00".)

Dimensions
mm (inch)

Cartridge only

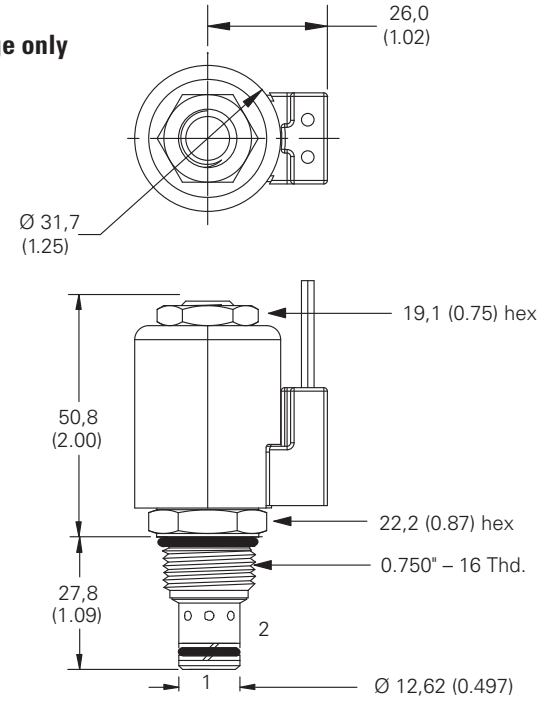

Torque cartridge in steel or aluminum housing 34-41 Nm (25-30 ft lbs)

Installation drawing

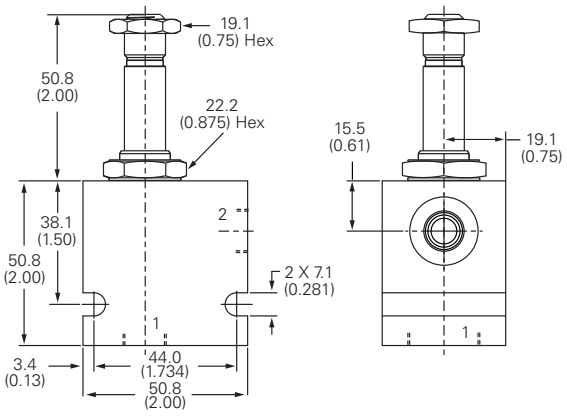

Note: When solenoid valve is ordered as Cartridge only, nut is included.

⚠ Warning
Maintain 5-8 Nm (4-6 ft lbs) maximum torque on valve tube nut.

Over tightening may cause valve failure.

Where measurements are critical request certified drawings. We reserve the right to change specifications without notice.

SV14-8-O/OM - Solenoid valve

Spool type, normally open solenoid valve
13 L/min (3.5 USgpm) • 350 bar (5000 psi)

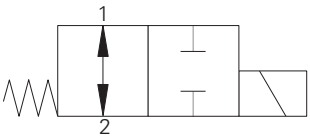

Operation

In the de-energized position the valve is open in both directions.

When the solenoid is energized the spool moves causing the valve to close in both directions.

Features

Hardened, ground and honed working parts to limit leakage. IP69 Tough coil compatibility. Continuously rated. Compact design with low pressure drop. 350 bar working pressure.

Sectional view

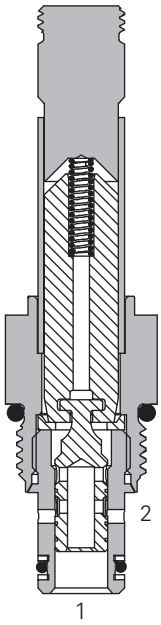

Performance data

Ratings and specifications

Performance data is typical with fluid at 21,8 cST (105 SUS) and 49°C (120°F)	
Typical application pressure (all ports)	350 bar (5000 psi)
Cartridge fatigue pressure (infinite life)	310 bar (4500 psi)
Rated flow	13 L/min (3.5 USgpm)
Internal leakage, port 2 to port 1	140 cm3/min (8.5 in3/min) max @ 350 bar (5000 psi)
Temperature range	-40° to 100°C (-40° to 212°F)
Coil duty	Continuous from 85% to 110% of nominal voltage
Cavity	C-8-2
Fluids	All general purpose hydraulic fluids such as: MIL-H-5606, SAE 10, SAE 20 etc.
Filtration	Cleanliness code 18/**16/13**
Housing material (standard)	Steel
Weight Cartridge only	0,11 kg (0.25 lbs)
Seal kit	02-165875 (Buna-N), 02-165877 (Viton®)

Viton is a registered trademark of E.I. DuPont

Description

This is a 2-way, 2-position, spool type, high pressure, direct acting, normally open solenoid valve. This valve is used in applications where the flow needs to be blocked in both directions when the solenoid is energized.

Pressure drop

Cartridge only

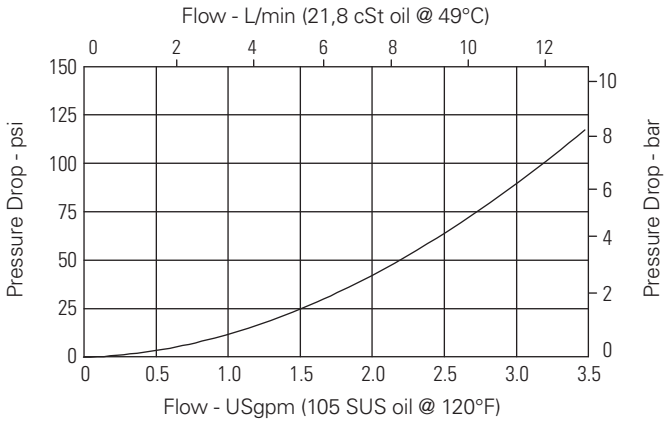

Port 2 to port 1 de-energized
Port 1 to port 2 de-energized

Where measurements are critical request certified drawings. We reserve the right to change specifications without notice.

SV14-8-O/OM - Solenoid valve

Spool type, normally open solenoid valve
13 L/min (3.5 USgpm) • 350 bar (5000 psi)

Model code

SV14	–	8	(V)	–	O	(M)	–	(S)	**	–	****	*	P	–	00
1		2	3		4	5		6	7		8	9	10		11

1 Function
SV14 - Solenoid valve

2 Size
8 - 8 size

3 Seal material
Blank - Buna-N
V - Viton®

4 Style
O - Normally open

5 Manual override option
Blank - No manual override
M - Manual override

For valve dimensions with manual override option installed see page A-980.

6 Valve housing material
Blank - Cartridge only
S - Steel

7 Port size

Code	Port size	Housing number
0	Cartridge only	
2G	1/4" BSPP	02-160733
3G	3/8" BSPP	02-160734
4T	SAE 4	02-160736
6T	SAE 6	02-160737
8T	SAE 8	02-160738

See section J for housing details.

8 Voltage rating
00 - No coil
12D - 12VDC
24D - 24VDC
36D - 36VDC
24A - 24VAC
115A - 115VAC
230A - 230VAC
12B - 12VDC/w diode*
24B - 24VDC/w diode*

*Optional arc suppression diode.

9 Connector types
Blank - No coil
G - ISO 4400 DIN 43650
Q - Spade terminals
W - Flying lead
N - Deutsch (DC only)
Y - Amp JR (DC only)
D - Metripack 150 male (DC only)
J - Metripack 280 male (DC only)

10 Coil series
P - 8 series, 23 W

For coil part numbers and dimensions see section C.

11 Special features
00 - None

(Only required if valve has special features, omitted if "00".)

Dimensions
mm (inch)

Torque cartridge in steel or aluminum housing 34-41 Nm (25-30 ft lbs)

Note: When solenoid valve is ordered as cartridge only, nut is included.

Cartridge only

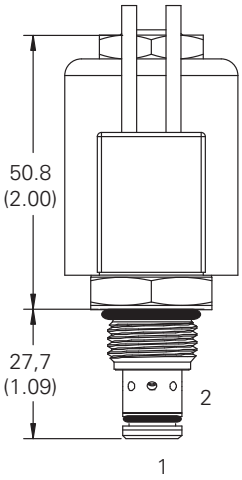

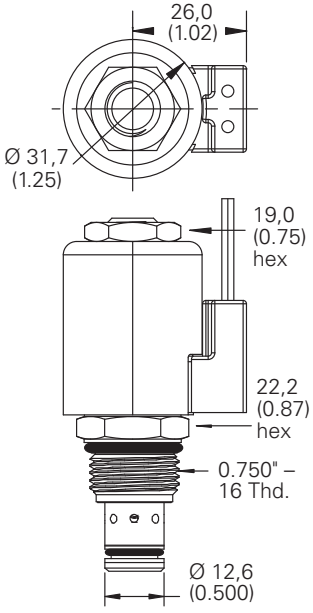

Installation drawing

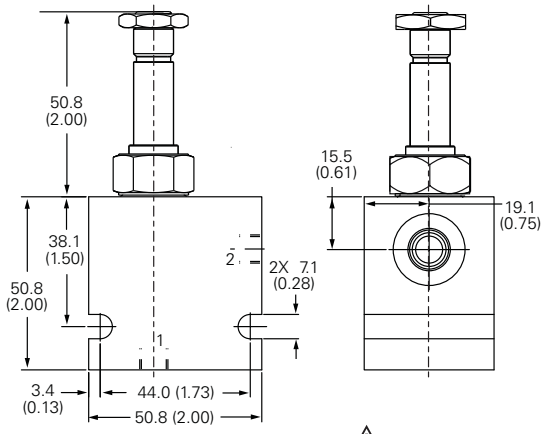

⚠ Warning

Maintain 5-8 Nm (4-6 ft lbs) maximum torque on valve tube nut.

Over tightening may cause valve failure.

Where measurements are critical request certified drawings. We reserve the right to change specifications without notice.

SV4-10-O/OM/OR - Solenoid valve

Spool type, normally open solenoid valve
23 L/min (6 USgpm) • 210 bar (3000 psi)

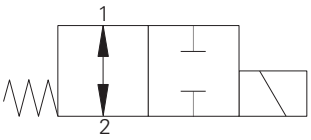

Operation

In the de-energized position the valve is open in both directions.

When the solenoid is energized the spool moves causing the valve to close in both directions.

Features

Hardened, ground and honed working parts to limit leakage. IP69 Tough coil compatibility. Continuously rated. Compact design with low pressure drop.

Sectional view

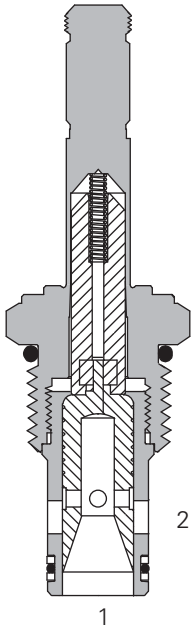

Performance data

Ratings and specifications

Performance data is typical with fluid at 21,8 cST (105 SUS) and 49°C (120°F)	
Typical application pressure (all ports)	210 bar (3000 psi)
Cartridge fatigue pressure (infinite life)	210 bar (3000 psi)
Rated flow	23 L/min (6 USgpm)
Internal leakage, port 2 to port 1	82 cm3/min (5 in3/min) max @ 210 bar (3000 psi)
Temperature range	-40° to 120°C (-40° to 248°F)
Coil duty	Continuous from 85% to 110% of nominal voltage
Cavity	C-10-2
Fluids	All general purpose hydraulic fluids such as: MIL-H-5606, SAE 10, SAE 20 etc.
Filtration	Cleanliness code 18/**16/13**
Housing material (standard)	Aluminum
Weight including cartridge	0,4 kg (0.87 lbs)
Seal kit	565806 (Buna-N), 889627 (Viton®)

Viton is a registered trademark of E.I. DuPont

Description

This is a 2-way, 2-position, spool type, direct acting, normally open solenoid valve. This valve is used in applications where the flow needs to be blocked in both directions when the solenoid is energized.

Pressure drop

Cartridge only

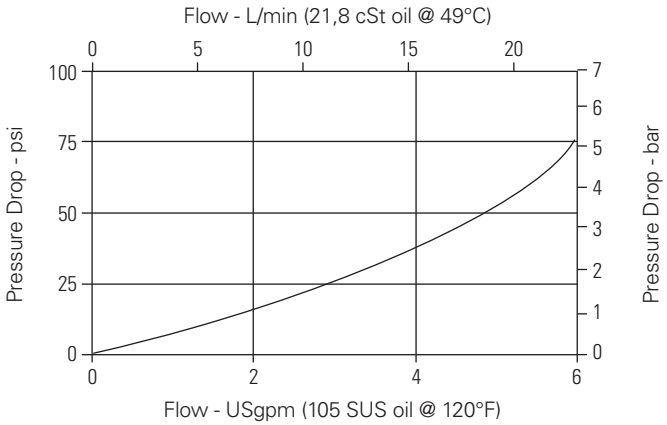

Port 2 to port 1 or
Port 1 to port 2 de-energized

Where measurements are critical request certified drawings. We reserve the right to change specifications without notice.

SV4-10-O/OM/OR - Solenoid valve

Spool type, normally open solenoid valve
23 L/min (6 USgpm) • 210 bar (3000 psi)

Model code

SV4	–	10	(V)	–	O	(*)	–	(F)	**	–	****	*	–	00
1		2	3		4	5		6	7		8	9		10

1 Function
SV4 - Solenoid valve

2 Size
10 - 10 size

3 Seal material
Blank - Buna-N
V - Viton®

4 Style
O - Normally open

5 Manual override option
Blank - No manual override
M - Knob type
R - Cable type

For valve dimensions with manual override option installed see page A-980

6 Filter option
Blank - None
F - Filter screen

7 Port size

Code	Port size	Housing number
0	Cartridge only	
3B	3/8" BSPP	02-175462*
6T	SAE 6	566151*
2G	1/4" BSPP	876702
3G	3/8" BSPP	876703
6H	SAE 6	876700
8H	SAE 8	876701

*Light duty housing.
See section J for housing details.

8 Voltage rating
00 - No coil
12D - 12VDC
24D - 24VDC
36D - 36VDC
24A - 24VAC
115A - 115VAC
230A - 230VAC
12B - 12VDC/w diode*
24B - 24VDC/w diode*

*Optional arc suppression diode.

9 Connector types
Blank - No coil
G - ISO 4400 DIN 43650
Q - Spade terminals
W - Flying lead
N - Deutsch (DC only)
Y - Amp JR (DC only)
D - Metripack 150 male (DC only)
J - Metripack 280 male (DC only)

For coil part numbers and dimensions see section C.

10 Special features
00 - None

(Only required if valve has special features, omitted if "00".)

Note: Use J series, 23 W coils with this solenoid valve.

Dimensions
mm (inch)

Cartridge only

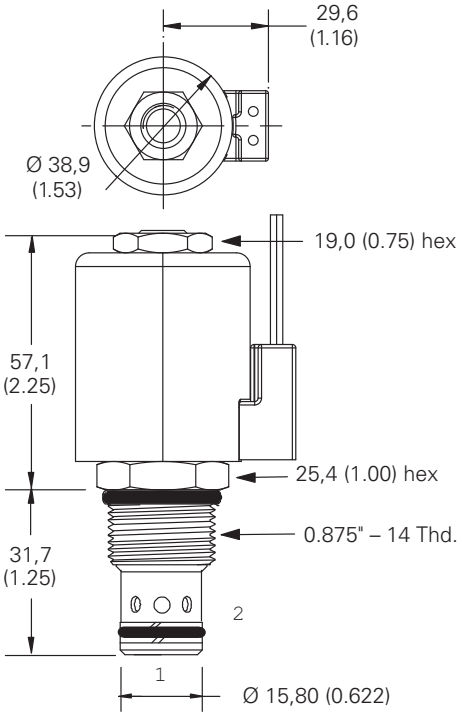

Torque cartridge in aluminum housing 47-54 Nm (35-40 ft lbs)

Installation drawing

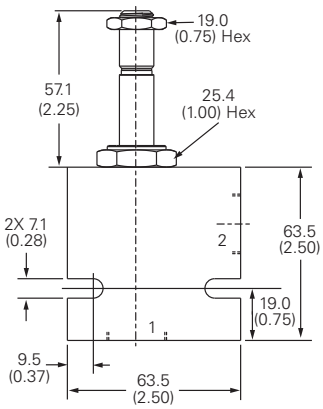

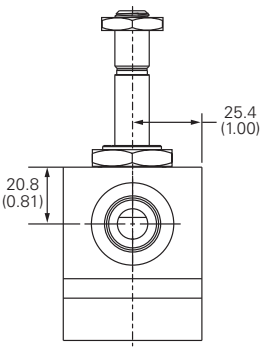

Note: When solenoid valve is ordered as cartridge only, nut is included.

⚠ Warning
Maintain 5-8 Nm (4-6 ft lbs) maximum torque on valve tube nut.

Over tightening may cause valve failure.

Where measurements are critical request certified drawings. We reserve the right to change specifications without notice.

SV14-10-O/OM - Solenoid valve

Spool type, normally open solenoid valve
23 L/min (6 USgpm) • 350 bar (5000 psi)

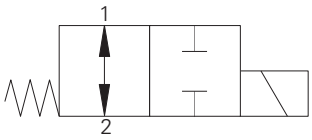

Operation

In the de-energized position the valve is open in both directions.

When the solenoid is energized the spool moves causing the valve to close in both directions.

Features

Hardened, ground and honed working parts to limit leakage. IP69 Tough coil compatibility. Continuously rated. Compact design with low pressure drop. 350 bar working pressure.

Sectional view

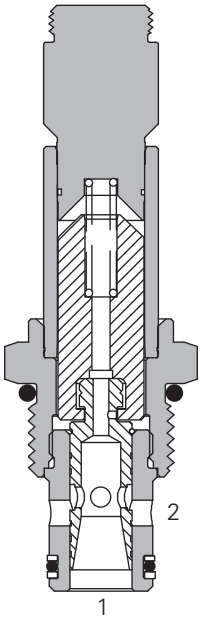

Performance data

Ratings and specifications

Performance data is typical with fluid at 21,8 cST (105 SUS) and 49°C (120°F)	
Typical application pressure (all ports)	350 bar (5000 psi)
Cartridge fatigue pressure (infinite life)	310 bar (4500 psi)
Rated flow	23 L/min (6 USgpm)
Internal leakage, port 2 to port 1	140 cm3/min (8.5 in3/min) max @ 350 bar (5000 psi)
Temperature range	-40° to 100°C (-40° to 212°F)
Coil duty	Continuous from 85% to 110% of nominal voltage
Cavity	C-10-2
Fluids	All general purpose hydraulic fluids such as: MIL-H-5606, SAE 10, SAE 20 etc.
Filtration	Cleanliness code 18/**16/13**
Housing material (standard)	Steel
Weight cartridge only	0,18 kg (0.39 lbs)
Seal kit	566806 (Buna-N), 889627 (Viton®)

Viton is a registered trademark of E.I. DuPont

Description

This is a 2-way, 2-position, spool type, high pressure, direct acting, normally open solenoid valve. This valve is used in applications where the flow needs to be blocked in both directions when the solenoid is energized.

Pressure drop

Cartridge only

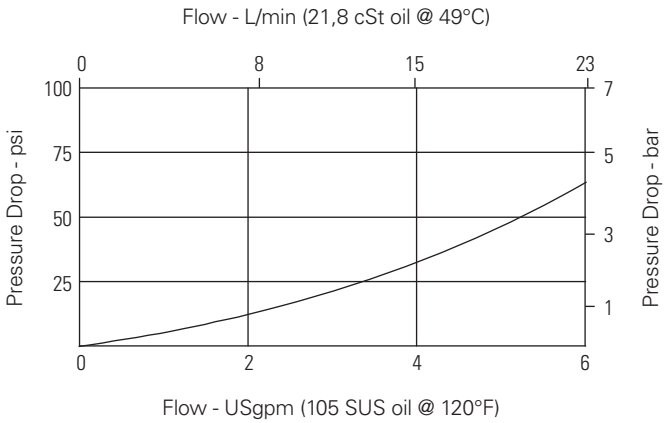

Port 2 to port 1 or
Port 1 to port 2 de-energized

Where measurements are critical request certified drawings. We reserve the right to change specifications without notice.

SV14-10-O/OM - Solenoid valve

Spool type, normally open solenoid valve
23 L/min (6 USgpm) • 350 bar (5000 psi)

Model code

SV14 – 10 (V) – O (M) – (S) ** – ** * H – 00**

1 2 3 4 5 6 7 8 9 10 11

1 Function
SV14 - Solenoid valve

2 Size
10 - 10 size

3 Seal material
Blank - Buna-N
V - Viton®

4 Style
O - Normally open

5 Manual override option
Blank - No manual override
M - Manual override

For valve dimensions with manual override option installed see page A-980.

6 Valve housing material
Blank - Cartridge only
S - Steel

7 Port size

Code	Port size	Housing number
0	Cartridge only	
2G	1/4" BSPP	02-175102
3G	3/8" BSPP	02-175103
6T	SAE 6	02-175100
8T	SAE 8	02-175101

See section J for housing details.

8 Voltage rating
00 - No coil
12D - 12VDC
24D - 24VDC
36D - 36VDC
24A - 24VAC
115A - 115VAC
230A - 230VAC
12B - 12VDC/w diode*
24B - 24VDC/w diode*

*Optional arc suppression diode.

9 Connector types
Blank - No coil
G - ISO 4400 DIN 43650
Q - Spade terminals
W - Flying lead
N - Deutsch (DC only)
Y - Amp JR (DC only)
D - Metripack 150 male (DC only)
J - Metripack 280 male (DC only)

10 Coil series
H - 10 series, 29 W

For coil part numbers and dimensions see section C.

11 Special features
00 - None

(Only required if valve has special features, omitted if "00".)

Dimensions
mm (inch)

Torque cartridge in steel housing 68-75 Nm (50-55 ft lbs)

Note: When solenoid valve is ordered as cartridge only, nut is included.

Cartridge only

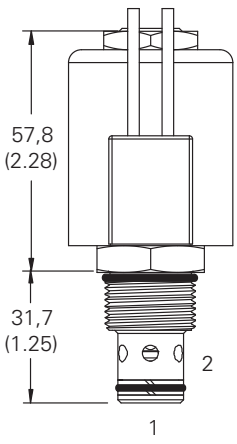

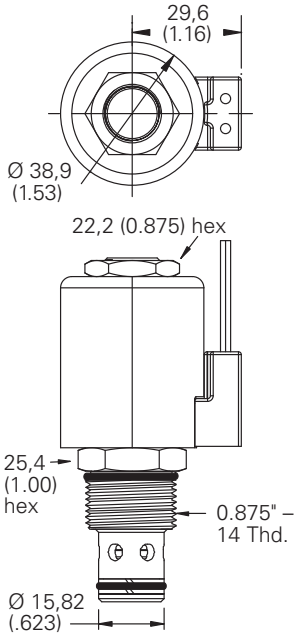

Installation drawing

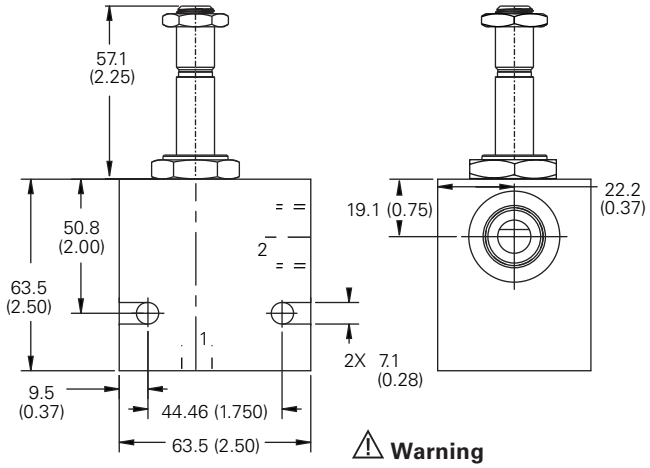

⚠ Warning
Maintain 5-8 Nm (4-6 ft lbs) maximum torque on valve tube nut.

Over tightening may cause valve failure.

Where measurements are critical request certified drawings. We reserve the right to change specifications without notice.

SV1-8-3/3M - Solenoid valve

3-way, 2-position spool type solenoid valve
11 L/min (3 USgpm) • 210 bar (3000 psi)

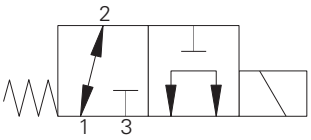

Operation

In the de-energized position this valve allows flow from port 1 to 2 while port 3 is blocked.

In the energized position flow is allowed from port 3 to port 1 while port 2 is blocked.

Features

Hardened, ground and honed working parts to limit leakage. IP69K Tough coil compatibility. Continuously rated. Compact design with low pressure drop. Rated pressure on all ports.

Sectional view

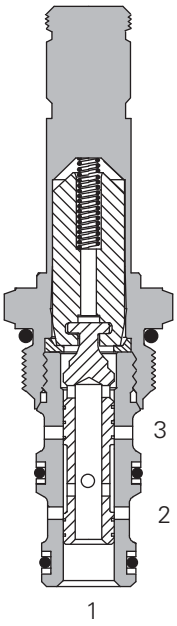

Performance data

Ratings and specifications

Performance data is typical with fluid at 21,8 cST (105 SUS) and 49°C (120°F)	
Typical application pressure (all ports)	210 bar (3000 psi)
Cartridge fatigue pressure (infinite life)	210 bar (3000 psi)
Rated flow	11 L/min (3 USgpm)
Internal leakage (per land)	82 cm3/min (5 in3/min) max @ 210 bar (3000 psi)
Temperature range	-40° to 120°C (-40° to 248°F)
Coil duty	Continuous from 85% to 110% of nominal voltage
Cavity	C-8-3
Fluids	All general purpose hydraulic fluids such as: MIL-H-5606, SAE 10, SAE 20 etc.
Filtration	Cleanliness code 18/**16/13**
Housing material (standard)	Aluminum
Weight including coil	0,30 kg (0.66 lbs)
Seal kit	02-160755 (Buna-N), 02-160756 (Viton®)

Viton is a registered trademark of E.I. DuPont

Description

This is a 3-way 2-position, direct acting, spool type solenoid valve. This valve can be used in applications requiring separate pressure and tank lines, such as a single acting cylinder or any other application where a three way two position solenoid valve is needed.

Pressure drop

Cartridge only

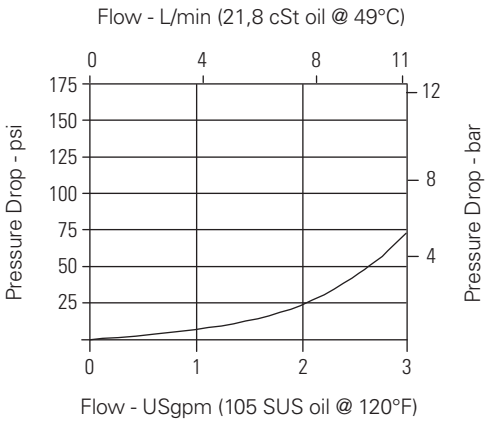

Pressure drop vs. Flow

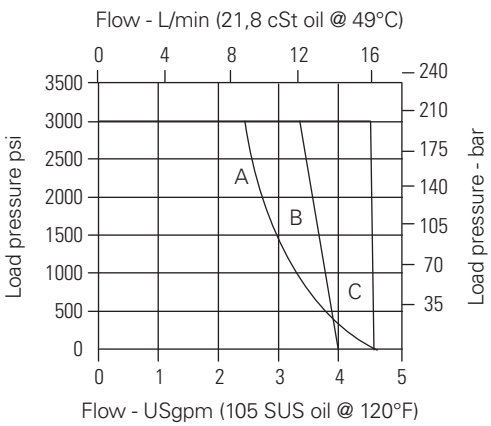

Operating Limits

A - Selector 1 to 3
B - Normally Open
C - Normally closed and Selector 1 to 2

Where measurements are critical request certified drawings. We reserve the right to change specifications without notice.

SV1-8-3/3M - Solenoid valve

3-way, 2-position spool type solenoid valve
11 L/min (3 USgpm) • 210 bar (3000 psi)

Model code

SV1	–	8	(V)	–	3	(M)	–	(A)	**	–	****	*	S	–	00
1		2	3		4	5		6	7		8	9	10		11

1 Function
SV1 - Solenoid valve

2 Size
8 - 8 size

3 Seal material
Blank - Buna-N
V - Viton®

4 Style
3 - 3-way, 2 position

5 Manual override option
Blank - No manual override
M - Knob type

For valve dimensions with manual override option installed see page A-980.

6 Valve housing material
Omit for Cartridge only
A - Aluminum

7 Port size

Code	Port size	Housing number
0	Cartridge only	
2G	1/4" BSPP	02-160739
3G	3/8" BSPP	02-160740
4T	SAE 4	02-160741
6T	SAE 6	02-160742

See section J for housing details.

8 Voltage rating
Blank - No coil
12D - 12VDC
24D - 24VDC
36D - 36VDC
24A - 24VAC
115A - 115VAC
230A - 230VAC
12B - 12VDC/w diode*
24B - 24VDC/w diode*

*Optional arc suppression diode.

9 Connector types
Blank - No coil
G - ISO 4400 DIN 43650
Q - Spade terminals
W - Flying lead
N - Deutsch (DC only)
Y - Amp JR (DC only)
D - Metripack 150 male (DC only)
J - Metripack 280 male (DC only)

10 Coil series
S - 8 series, 20 W

For coil part numbers and dimensions see section C.

11 Special features
00 - None

(Only required if valve has special features, omitted if "00".)

Dimensions
mm (inch)

Cartridge only

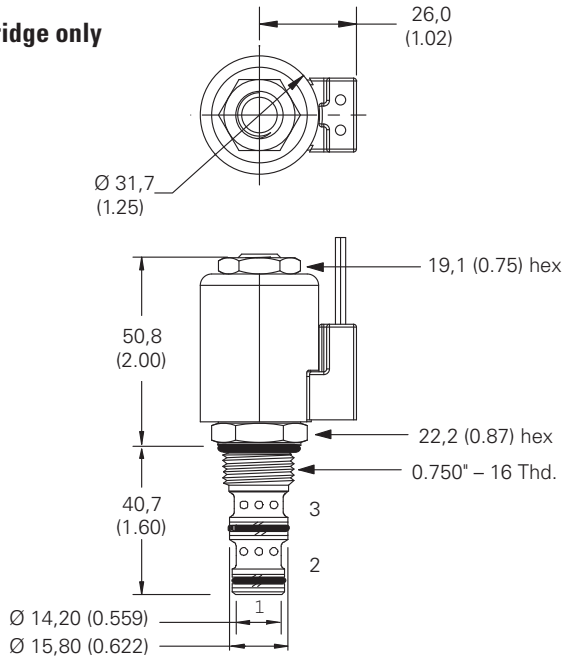

Torque cartridge in steel or aluminum housing 34-41 Nm (25-30 ft lbs)

Note: When solenoid valve is ordered as cartridge only, nut is included.

Installation drawing

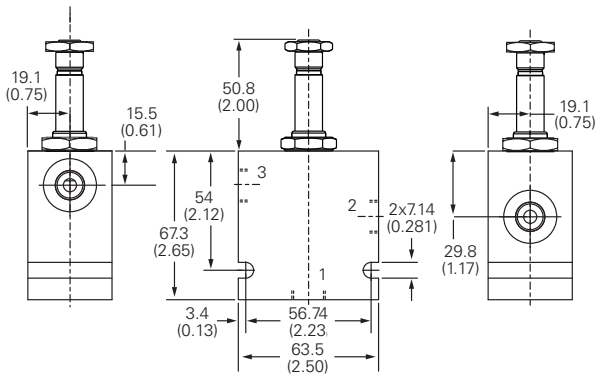

⚠ Warning
Maintain 5-8 Nm (4-6 ft lbs) maximum torque on valve tube nut.

Over tightening may cause valve failure.

Where measurements are critical request certified drawings. We reserve the right to change specifications without notice.

SV11-8-3/3M - Solenoid valve

3-way, 2-position spool type solenoid valve
11 L/min (3 USgpm) • 350 bar (5000 psi)

A

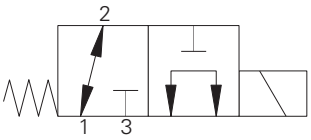

Operation

In the de-energized position this valve allows flow from port 2 to 1 while port 3 is blocked.

In the energized position flow is allowed from port 1 to port 3 while port 2 is blocked.

Features

Hardened, ground and honed working parts to limit leakage. IP69K Tough coil compatibility. Continuously rated. Compact design with low pressure drop. Rated pressure on all ports.

Sectional view

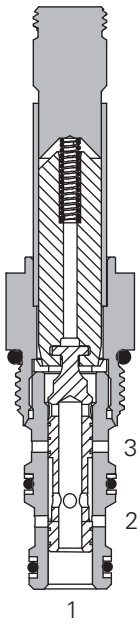

Performance data

Ratings and specifications

Performance data is typical with fluid at 21,8 cST (105 SUS) and 49°C (120°F)	
Typical application pressure (all ports)	350 bar (5000 psi)
Cartridge fatigue pressure (infinite life)	310 bar (4500 psi)
Rated flow	11 L/min (3 USgpm)
Internal leakage, combined port 2 and port 1	140 cm3/min (8.5 in3/min) max @ 350 bar (5000 psi)
Temperature range	-40° to 100°C (-40° to 212°F)
Coil duty	Continuous from 85% to 110% of nominal voltage
Cavity	C-8-3
Fluids	All general purpose hydraulic fluids such as: MIL-H-5606, SAE 10, SAE 20 etc.
Filtration	Cleanliness code 18/**16/13**
Housing material (standard)	Steel
Weight Cartridge only	0,13 kg (0.28 lbs)
Seal kit	02-160755 (Buna-N), 02-160756 (Viton®)

Viton is a registered trademark of E.I. DuPont

Description

This is a 3-way 2-position, high pressure, direct acting, spool type solenoid valve. This valve can be used in applications requiring separate pressure and tank lines, such as a single acting cylinder or any other application where a three way two position solenoid valve is needed.

Pressure drop

Cartridge only

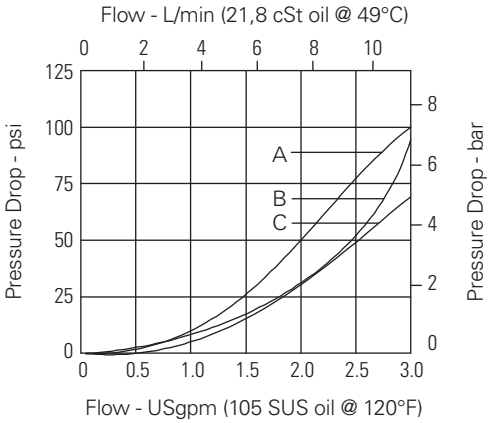

Pressure drop vs. Flow

A - Port 1 to 2 and 1 to 3
B - Port 3 to 1
C - Port 2 to 1

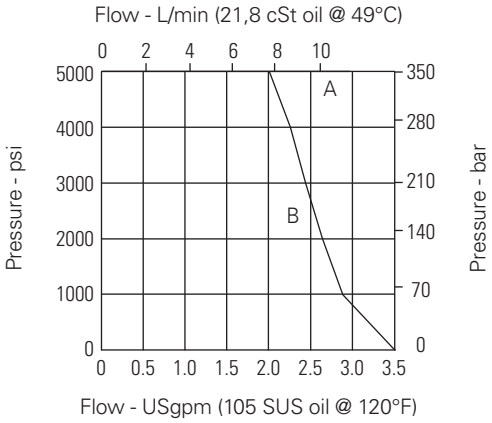

Operating Limits

A - Normally open & closed
B - Selector 1 to 2 and 1 to 3

Where measurements are critical request certified drawings. We reserve the right to change specifications without notice.

SV11-8-3/3M - Solenoid valve

3-way, 2-position spool type solenoid valve
11 L/min (3 USgpm) • 350 bar (5000 psi)

Model code

SV11	–	8	(V)	–	3	(M)	–	(S)	**	–	****	*	P	–	00
1		2	3		4	5		6	7		8	9	10		11

1 Function
SV11 - Solenoid valve

2 Size
8 - 8 size

3 Seal material
Blank - Buna-N
V - Viton®

4 Style
3 - 3-way, 2 position

5 Manual override option
Blank - No manual override
M - Manual override

For valve dimensions with manual override option installed see page A-980.

6 Valve housing material
Blank - Cartridge only
S - Steel

7 Port size

Code	Port size	Housing number
0	Cartridge only	
2G	1/4" BSPP	02-160743
3G	3/8" BSPP	02-160744
4T	SAE 4	02-160745
6T	SAE 6	02-160746

See section J for housing details.

8 Voltage rating
00 - No coil
12D - 12VDC
24D - 24VDC
36D - 36VDC
24A - 24VAC
115A - 115VAC
230A - 230VAC
12B - 12VDC/w diode*
24B - 24VDC/w diode*

*Optional arc suppression diode.

9 Connector types
Blank - No coil
G - ISO 4400 DIN 43650
Q - Spade terminals
W - Flying lead
N - Deutsch (DC only)
Y - Amp JR (DC only)
D - Metripack 150 male (DC only)
J - Metripack 280 male (DC only)

10 Coil series
P - 8 series, 23 W

For coil part numbers and dimensions see section C.

11 Special features
00 - None

(Only required if valve has special features, omitted if "00".)

Dimensions
mm (inch)

Cartridge only

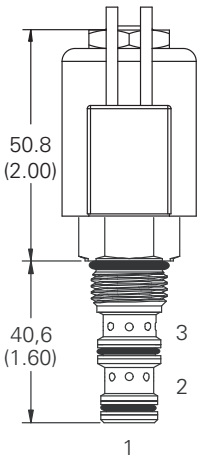

Torque cartridge in steel or aluminum housing 34-41 Nm (25-30 ft lbs)

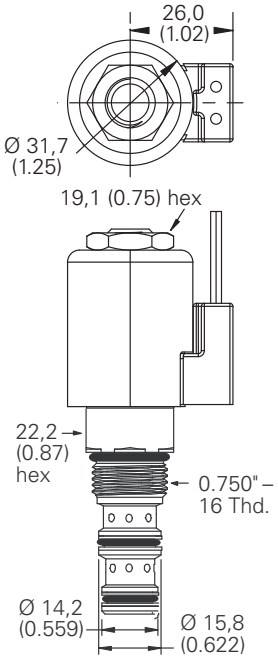

Note: When solenoid valve is ordered as cartridge only, nut is included.

Installation drawing

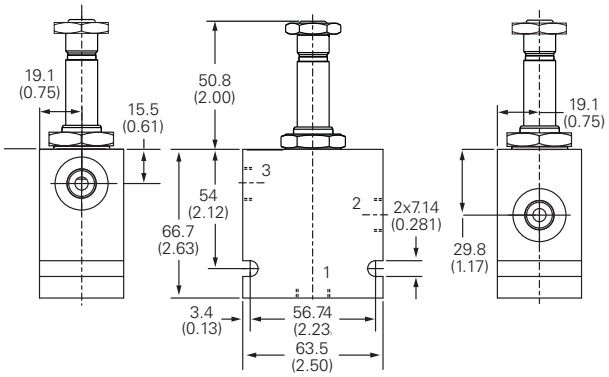

⚠ Warning
Maintain 5-8 Nm (4-6 ft lbs) maximum torque on valve tube nut.

Over tightening may cause valve failure.

Where measurements are critical request certified drawings. We reserve the right to change specifications without notice.

SV4-8-3/3P - Solenoid valve

3-way, 2-position spool type solenoid valve
13 L/min (4 USgpm) • 210 bar (3000 psi)

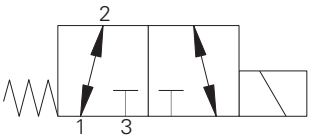

Operation

In the de-energized position this valve allows flow from port 2 to 1 while port 3 is blocked.

In the energized position flow is allowed from port 2 to port 3 while port 1 is blocked.

Features

Hardened, ground and honed working parts to limit leakage. IP69K Tough coil compatibility. Continuously rated. Compact design with low pressure drop. Rated pressure on all ports.

Sectional view

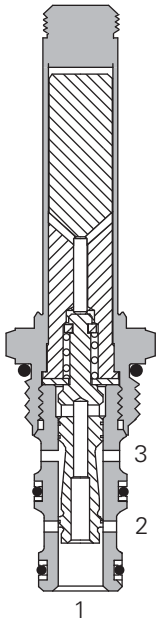

Performance data

Ratings and specifications

Performance data is typical with fluid at 21,8 cST (105 SUS) and 49°C (120°F)	
Typical application pressure (all ports)	210 bar (3000 psi)
Cartridge fatigue pressure (infinite life)	210 bar (3000 psi)
Rated flow	13 L/min (4 USgpm)
Internal leakage	82 cm3/min (5 in3/min) max @ 210 bar (3000 psi)
Temperature range	-40° to 120°C (-40° to 248°F)
Coil duty	Continuous from 85% to 110% of nominal voltage
Response times (100% rated voltage and flow)	Energize: 22 ms De-Energize: 27 ms
Cavity	C-8-3
Fluids	All general purpose hydraulic fluids such as: MIL-H-5606, SAE 10, SAE 20 etc.
Filtration	Cleanliness code 18/**16/13**
Housing material (standard)	Aluminum
Weight including coil	0,29 kg (0.64 lbs)
Seal kit	02-160755 (Buna-N), 02-160756 (Viton®)

Viton is a registered trademark of E.I. DuPont

Note: Pressure on port 1 should not exceed 20 bar (300 psi).

Description

This is a 3-way 2-position, direct acting, spool type solenoid valve. This valve can be used in applications requiring separate pressure and tank lines, such as a single acting cylinder or any other application where a three way two position solenoid valve is needed.

Pressure drop

Cartridge only

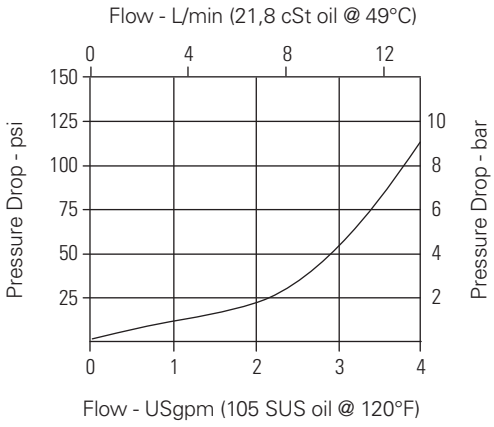

Pressure drop vs. Flow

Port 2 to 1 and
port 2 to port 3

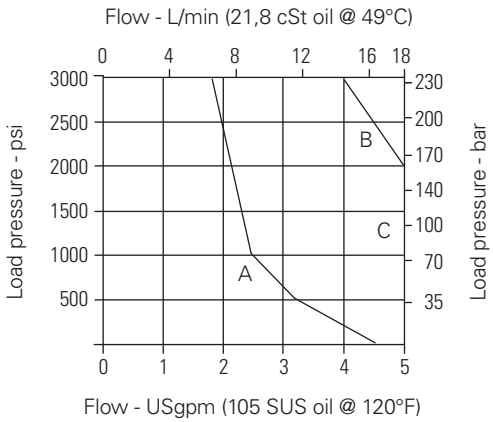

Operating Limits

A - Normally open port 1 to port 2
B - Normally closed port 3 to port 1
C - Selector 2 to 1 and 2 to 3

Where measurements are critical request certified drawings. We reserve the right to change specifications without notice.

SV4-8-3/3P - Solenoid valve

3-way, 2-position spool type solenoid valve
13 L/min (4 USgpm) • 210 bar (3000 psi)

Model code

SV4	–	8	(V)	–	3	(P)	–	(A)	**	–	****	*	S	–	00
1		2	3		4	5		6	7		8	9	10		11

1 Function
SV4 - Solenoid valve

2 Size
8 - 8 size

3 Seal material
Blank - Buna-N
V - Viton®

4 Style
3 - 3-way, 2 position

5 Manual override option
Blank - No manual override
P - Push type

For valve dimensions with manual override option installed see page A-980.

6 Valve housing material
Omit for cartridge only
A - Aluminum

7 Port size

Code	Port size	Housing number
0	Cartridge only	
2G	1/4" BSPP	02-160739
3G	3/8" BSPP	02-160740
4T	SAE 4	02-160741
6T	SAE 6	02-160742

See section J for housing details.

8 Voltage rating
00 - No coil
12D - 12VDC
24D - 24VDC
36D - 36VDC
24A - 24VAC
115A - 115VAC
230A - 230VAC
12B - 12VDC/w diode*
24B - 24VDC/w diode*

*Optional arc suppression diode.

9 Connector types
Blank - No coil
G - ISO 4400 DIN 43650
Q - Spade terminals
W - Flying lead
N - Deutsch (DC only)
Y - Amp JR (DC only)
D - Metripack 150 male (DC only)
J - Metripack 280 male (DC only)

10 Coil series
S - 8 series, 20 W

For coil part numbers and dimensions see section C.

11 Special features
00 - None

(Only required if valve has special features, omitted if "00".)

Dimensions
mm (inch)

Cartridge only

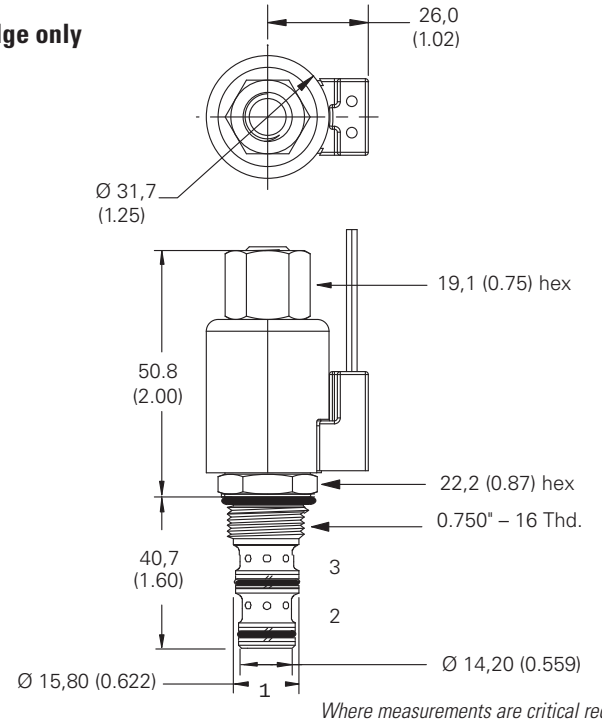

Torque cartridge in steel or aluminum housing 34-41 Nm (25-30 ft lbs)

Note: When solenoid valve is ordered as cartridge only, nut is included.

Installation drawing

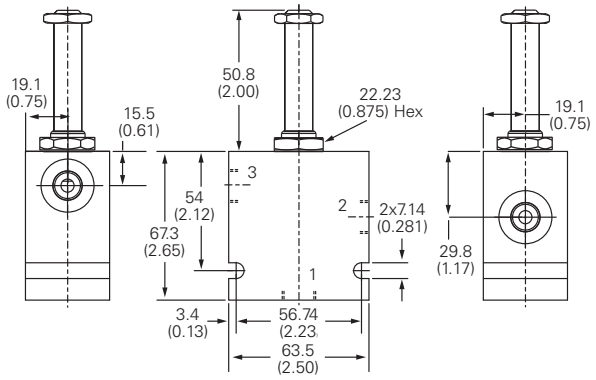

⚠ Warning
Maintain 5-8 Nm (4-6 ft lbs) maximum torque on valve tube nut.

Over tightening may cause valve failure.

Where measurements are critical request certified drawings. We reserve the right to change specifications without notice.

S229 - Solenoid valve

3-way, 2-position poppet type solenoid valve
Up to 12L/min (3.2 USgpm) • 210 bar (3000 psi)

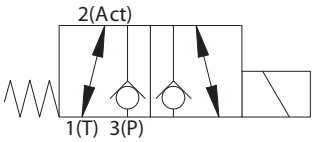

Operation

In the de-energized condition port 3 is blocked and port 2 is open to port 1. When energized port 3 is open to port 2 and port 1 is blocked.

Features

- High flow capacity with reduced space requirements.
- No dynamic seals.
- Standard valve bodies and common cavities.
- One-piece encapsulated coil with minimal amperage draw.
- Oil immersed armature solenoid.
- Various coil terminals and voltages.
- Manual override, seal variations and other options available.
- Sealed coil arrangement to protect stem from corrosion.

Sectional view

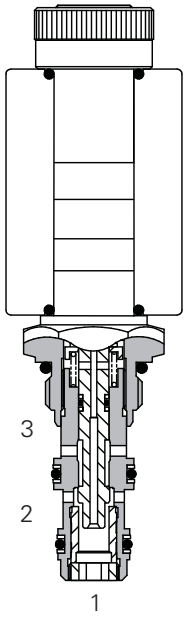

Performance data

Ratings and specifications

Figures based on Viscosity 32 cST (150 SSU)	
Actuator port location	Port 2
Max working pressure	210 bar (3000 psi)
Rated flow	See performance graphs
Nominal flow at ΔP = 5 bar (70 psi)	10 L/min (2.6 USgpm)
Internal leakage	Less than .6 ml/min (10 dpm)
Temperature range	-30° to 120°C (-22° to 248°F)
Cavity	A3531 (see Section M)
Electrical data	See coil data sheet
Torque cartridge into cavity	30 Nm (22 lbs ft)
Mounting position	Unrestricted
Fluids	All general purpose hydraulics fluids such as:MIL-H-5606, SAE 10, SAE 20, etc
Seal material	Standard nitrile with PTFE back up rings
Filtration	BS5540/4 Class 18/13 (25 micron or better)
Nominal viscosity range	15 to 250 cSt
Standard housing materials	Aluminium Alloy
Coil weight	0.3 kg (0.6 lbs)
Cartridge weight	0.13 kg (0.3 lbs)
Seal kit	SK119 (Nitrile) SK119V (Viton®)
Coil part number	C16-*-*/29
Coil voltage available	12, 24 VDC, 110, 220, VAC*

Viton is a registered trademark of E.I. DuPont
*AC coils must be used with a rectifying connector

Description

This valve is a 2 position 3 ported poppet solenoid operated diverter screw in cartridge valve. It is ideal for use in systems where low leakage is important.

Pressure drop

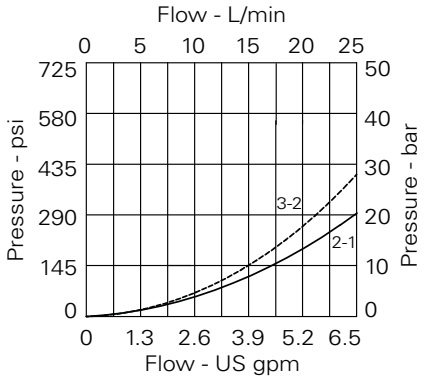

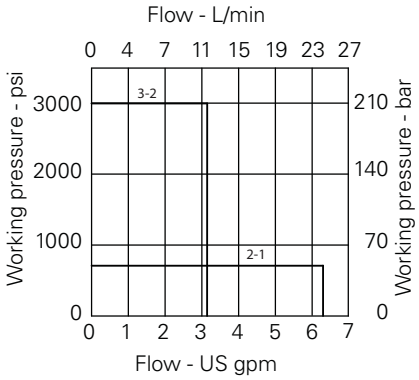

Where measurements are critical request certified drawings. We reserve the right to change specifications without notice.

S229 - Solenoid valve

3-way, 2-position poppet type solenoid valve
Up to 12L/min (3.2 USgpm) • 210 bar (3000 psi)

Model code

S229	N	*	–	H	24	–	3W
1	2	3		4	5		6

1 Function
S229

2 Seal material
N - Nitrile
V - Viton®

3 Manual Override
2 - Screw
3 - Push
(Consult factory for availability).
See page A-960.

4 Coil Termination
H - DIN43650
F - Flying lead
DM - Deutsch moulded
Other terminations available on request.

5 Voltage
12 - 12 VDC
24 - 24 VDC
110 - 110 VAC
220 - 220 VAC

6 Port size

Code	Port size	Housing number - body only
		Aluminium
2W	1/4" BSP	B7724
3W	3/8" BSP	B6684
6T	3/8" SAE	B6516

Dimensions

mm (inch)

Cartridge only

Basic Code
S229

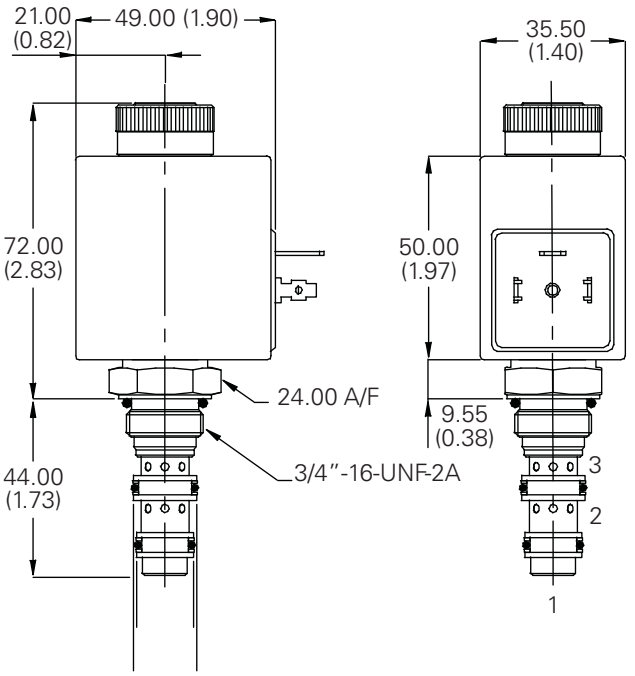

Installation drawing

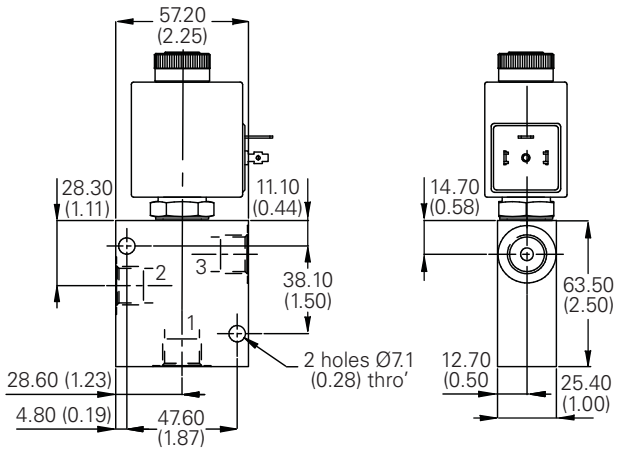

Where measurements are critical request certified drawings. We reserve the right to change specifications without notice.

S520(H) - Solenoid valve

3-way, 2-position spool type solenoid valve
Up to 40L/min (10 USgpm) • 210 bar (3000 psi)

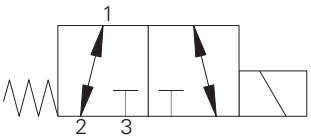

Operation

In the de-energized position this valve allows flow from port 1 to 2 while port 3 is blocked.

In the energized position flow is allowed from port 3 to port 1 while port 2 is blocked.

Features

Hardened, ground and honed working parts to limit leakage. Continuously rated. Compact design with low Pressure drop. Rated pressure on all ports.

Sectional view

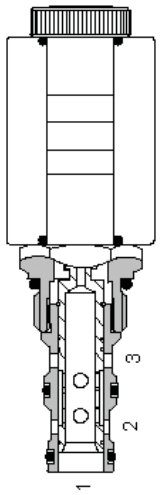

Description

This is a 3-way 2-position, direct acting, spool type solenoid valve. This valve can be used in applications requiring separate pressure and tank lines, such as a single acting cylinder or any other application where a three way two position solenoid valve is needed.

Performance data

Ratings and specifications

Figures based on Viscosity 32 cST (150 SSU)	
Actuator port location	Port 1
Max working pressure	210 bar (3000 psi)
Rated flow at ΔP = 5 bar (70 psi)	Up to 40 L/min (10 USgpm)
Nominal flow	22 L/min (6 USgpm)
Internal leakage	Less than 120 ml/min past each land 210 bar differential at 32 centistokes
Temperature range	-30° to +120°C (-22° to +248°F)
Cavity	C-10-3 (see Section M)
Electrical data	See coil data sheet
Torque cartridge into cavity	30 Nm (22 lbs ft)
Mounting position	Unrestricted
Fluids	Most general purpose hydraulics fluids such as: MIL-H-5606, SAE 10, SAE 20 etc
Seal material	Standard nitrile with PTFE back up rings
Filtration	BS5540/4 Class 18/13 (25 micron or better)
Nominal viscosity range	15 to 250 cSt
Standard housing materials	Aluminium alloy
Coil weight	0.3 kg (0.6 lbs)
Cartridge weight	0.2 kg (0.4 lbs)
Seal kit	SK1030 (Nitrile) SK1030V (Viton®)
Coil part number	S520: C16-*-*/19 S520(H): C16-*-*/29
Coil voltage available	12, 24 VDC, 110, 220, VAC*

Viton is a registered trademark of E.I. DuPont
*AC coils must be used with a rectifying connector

Pressure drop

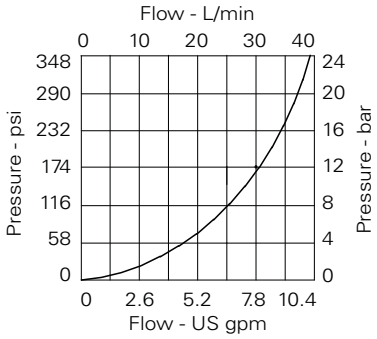

Selector Mode

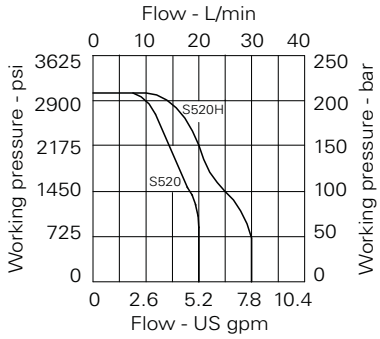

Normally closed and Normally open modes

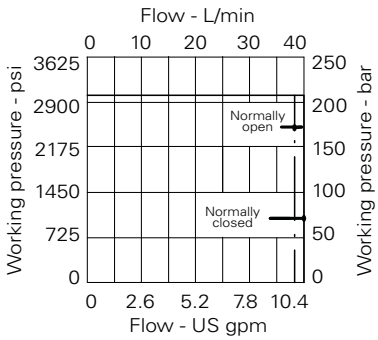

Where measurements are critical request certified drawings. We reserve the right to change specifications without notice.

S520(H) - Solenoid valve

3-way, 2-position spool type solenoid valve
Up to 40L/min (10 USgpm) • 210 bar (3000 psi)

Model code

S520* **N** ***** – **H** **24** – **3W**

1 2 3 4 5 6

1 Function

S520 - Standard valve

S520(H) - Heavy duty valve

2 Seal material

N - Nitrile

V - Viton®

3 Manual Override

2 - Screw

(Consult factory for availability).
See page A-960.

4 Coil Termination

H - DIN43650

F - Flying leads

DM - Deutsch moulded

Other terminations available on request.

5 Voltage

12 - 12 VDC

24 - 24 VDC

110 - 110 VAC

220 - 220 VAC

6 Port size

Code	Port size	Housing number - body only
		Aluminium
3W	3/8" BSP	B18982
4W	1/2" BSP	B19358
8T	1/2" SAE	B19360

Dimensions

mm (inch)

Cartridge only

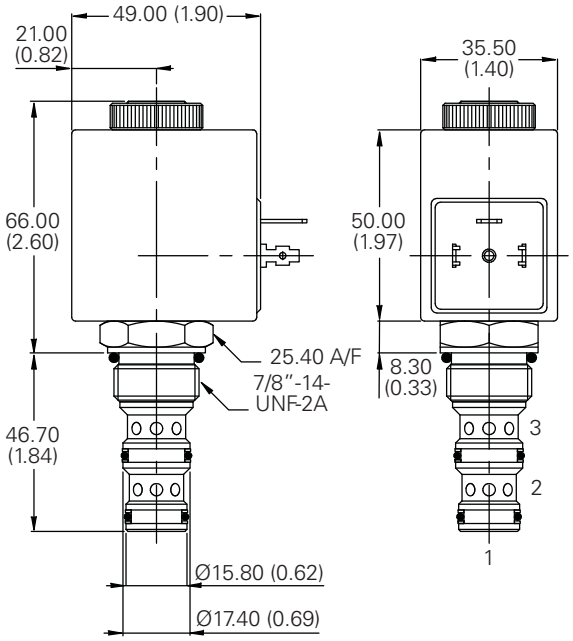

Installation drawing

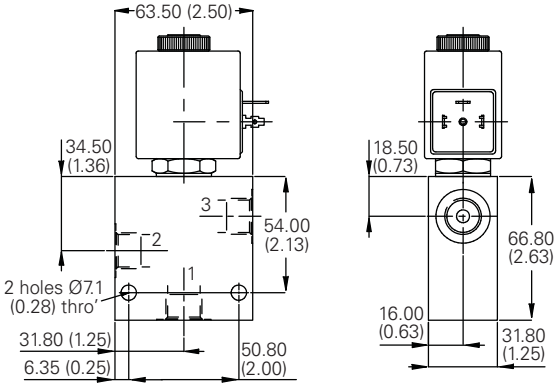

Where measurements are critical request certified drawings. We reserve the right to change specifications without notice.

S521(H) - Solenoid valve

3-way, 2-position spool type solenoid valve
Up to 44 L/min (11.5 USgpm) • Up to 210 bar (3000 psi)

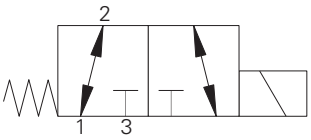

Operation

In the de-energized position this valve allows flow from port 2 to 1 while port 3 is blocked. In the energized position flow is allowed from port 2 to port 3 while port 1 is blocked.

Features

- High flow capacity with reduced space requirements.
- No dynamic seals.
- Standard valve bodies and common cavities.
- One-piece encapsulated coil with minimal amperage draw.
- Oil immersed armature solenoid.
- Various coil terminals and voltages.
- Coil interchangeability with Series S5 valves.
- Manual override, seal variations and other options available.
- Sealed coil arrangement to protect stem from corrosion.

Sectional view

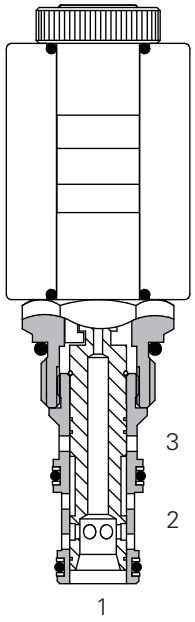

Description

This is a 3-way 2-position, direct acting, spool type solenoid valve. This valve can be used in applications requiring separate pressure and tank lines, such as a single acting cylinder or any other application where a three way two position solenoid valve is needed.

Performance data

Ratings and specifications

Figures based on Viscosity 32 cST (150 SSU)	
Actuator port location	Port 2
Max working pressure	210 bar (3000 psi)
Rated flow	See performance graphs
Nominal flow at ΔP = 5 bar (70 psi)	17 L/min
Internal leakage	Less than 120 ml/min past each land 210 bar differential
Temperature range	-30° to +120°C (-22° to +248°F)
Cavity	C-10-3 (see Section M)
Electrical data	See coil data sheet
Torque cartridge into cavity	30 Nm (22 lbs ft)
Mounting position	Unrestricted
Fluids	All general purpose hydraulics fluids such as: MIL-H-5606, SAE 10, SAE 20 etc
Seal material	Standard nitrile with PTFE back up rings
Filtration	BS5540/4 Class 18/13 (25 micron or better)
Nominal viscosity range	15 to 250 cSt
Standard housing materials	Aluminium alloy
Coil Weight	0.3 kg (0.6 lbs)
Weight	0.2 kg (0.4 lbs)
Seal kit	SK1030 (Nitrile) SK1030V (Viton®)
Coil part number	C16-*-*/19 (5521) C16-*-*/29(5521H)
Coil voltage available	12, 24 VDC, 110, 220, VAC*

Viton is a registered trademark of E.I. DuPont
*AC coils must be used with a rectifying connector

Pressure drop

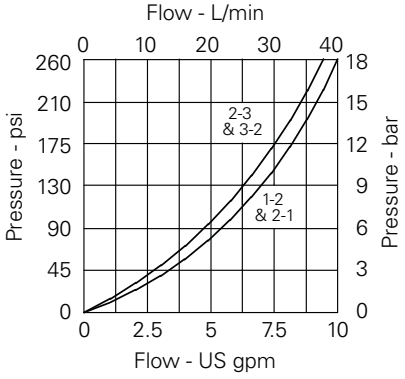

Performance Selector Mode

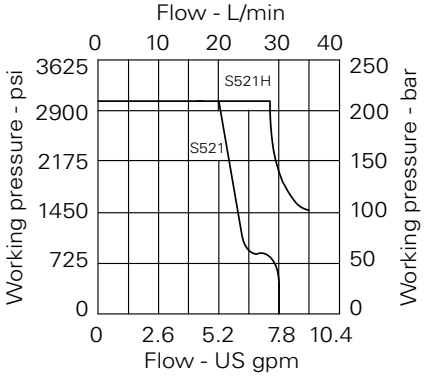

Performance Normally closed and Normally open modes

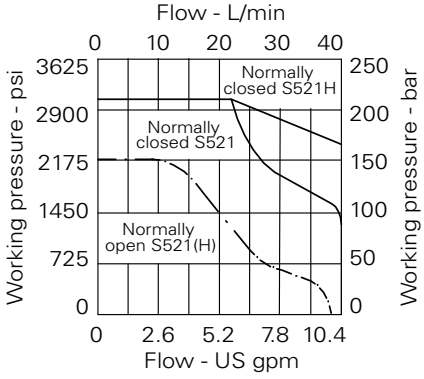

Where measurements are critical request certified drawings. We reserve the right to change specifications without notice.

S521(H) - Solenoid valve

3-way, 2-position spool type solenoid valve
Up to 44 L/min (11.5 USgpm) • Up to 210 bar (3000 psi)

Model code

S521* **N** ***** – **H** **24** – **3W**

1 2 3 4 5 6

1 Function
S521 - Standard valve
S521(H) - Heavy duty valve

2 Seal material
N - Nitrile
V - Viton®

3 Manual Override
2 - Screw
(Consult factory for availability).
See page A-960.

4 Coil Termination
H - DIN43650
F - Flying leads
DM - Deutsch moulded
Other terminations available on request.

5 Voltage
12 - 12 VDC
24 - 24 VDC
110 - 110 VAC
220 - 220 VAC

6 Port size

Code	Port size	Housing number - body only
		Aluminium
3W	3/8" BSP	B18982
4W	1/2" BSP	B19358
8T	1/2" SAE	B19360

Dimensions

mm (inch)

Cartridge only

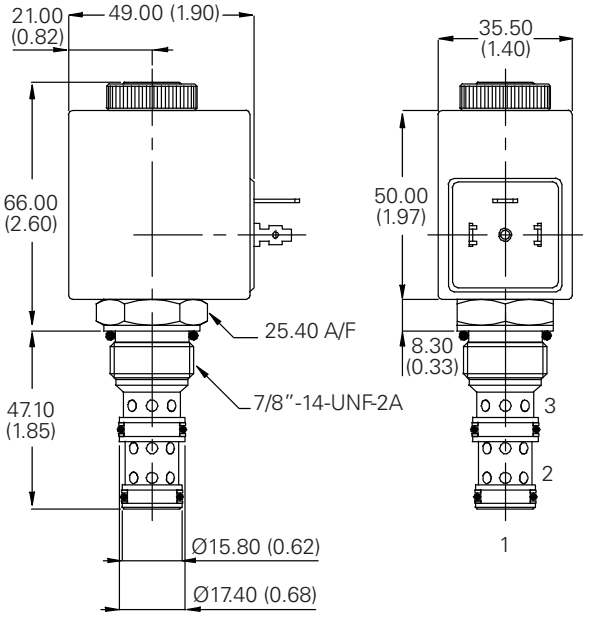

Installation drawing

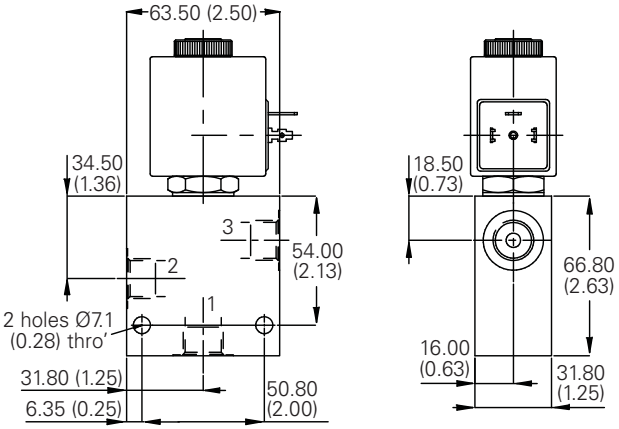

Where measurements are critical request certified drawings. We reserve the right to change specifications without notice.

S525(H) - Solenoid valve

3-way, 2-position spool type solenoid valve
Up to 30 L/min (8 USgpm) • 210 bar (3000 psi)

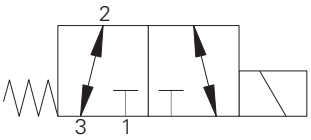

Operation

In the de-energized position this valve allows flow from port 2 to 3 while port 1 is blocked. In the energized position flow is allowed from port 1 to port 2 while port 3 is blocked.

Features

- High flow capacity with reduced space requirements.
- No dynamic seals.
- Standard valve bodies and common cavities.
- One-piece encapsulated coil with minimal amperage draw.
- Oil immersed armature solenoid.
- Various coil terminals and voltages.
- Coil interchangeability with Series S5 valves.
- Manual override, seal variations and other options available.
- Sealed coil arrangement to protect stem from corrosion.

Sectional view

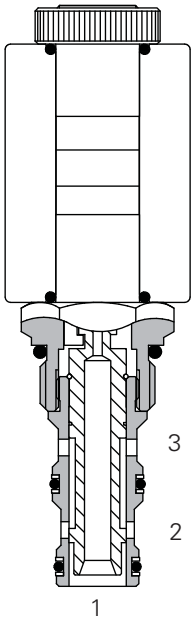

Description

This is a 3-way 2-position, direct acting, spool type solenoid valve. This valve can be used in applications requiring separate pressure and tank lines, such as a single acting cylinder or any other application where a three way two position solenoid valve is needed.

Performance data

Ratings and specifications

Performance data is typical based on Viscosity 32 cST (150 SSU)	
Actuator port location	Port 2
Max working pressure	210 bar (3000 psi)
Rated flow	See performance graphs
Nominal flow at ΔP = 5 bar (70 psi)	25 L/min (6.5 USgpm)
Internal leakage	Less than 120 ml/min 210 bar differential
Temperature range	-30° to 120°C (-22° to 248°F)
Cavity	C-10-3 (See Section M)
Electrical data	See coil data sheet
Torque cartridge into cavity	30 Nm (22 lbs ft)
Mounting position	Unrestricted
Fluids	Most general purpose hydraulics fluids such as: MIL-H-5606, SAE 10, SAE 20 etc
Seal material	Standard nitrile with PTFE back up rings
Filtration	BS5540/4 Class 18/13 (25 micron or better)
Nominal viscosity range	15 to 250 cSt
Standard housing materials	Aluminium alloy
Coil weight	0.3 kg (0.6 lbs)
Cartridge weight	0.2 kg (0.4 lbs)
Seal kit	SK1030 (Nitrile) SK1030V (Viton®)
Coil part number	C16*-*/19 (3525) C16*-*/29 (5525H)
Coil voltage available	12, 24 VDC, 110, 220, VAC*

Viton is a registered trademark of E.I. DuPont
*AC coils must be used with a rectifying connector

Pressure drop

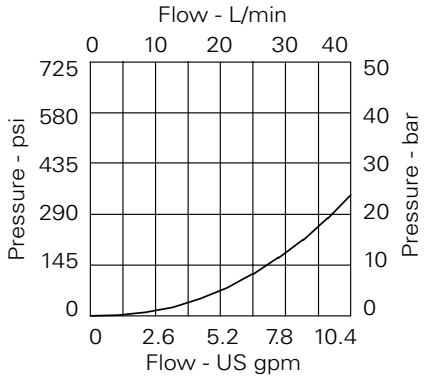

Performance
S525

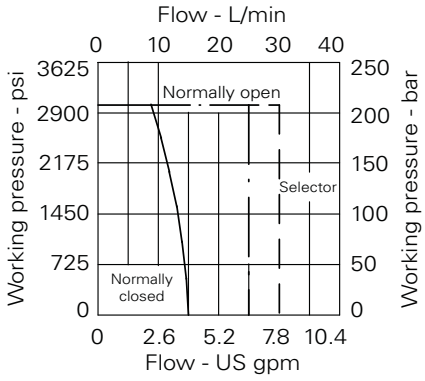

Performance
S525H

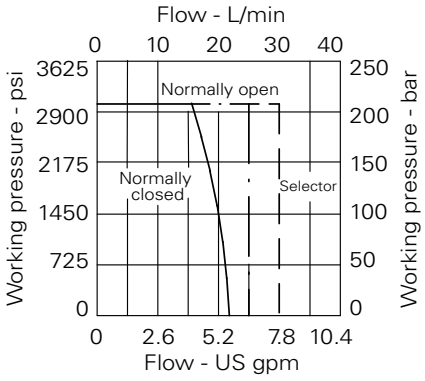

Where measurements are critical request certified drawings. We reserve the right to change specifications without notice.

S525(H) - Solenoid valve

3-way, 2-position spool type solenoid valve
Up to 30 L/min (8 USgpm) • 210 bar (3000 psi)

Model code

S525* **N** ***** – **H** **24** – **3W**

1 2 3 4 5 6

1 Function

S525 - Standard valve
S525H - Heavy duty valve

2 Seal material

N - Nitrile
V - Viton®

3 Manual override

2 - Screw
(Consult factory for availability).
See page A-960.

4 Coil Termination

H - DIN43650
F - Flying leads
DM - Deutsch moulded
Other terminations available on request.

5 Voltage

12 - 2 VDC
24 - 24 VDC
110 - 110 VAC
220 - 220 VAC

6 Port size

Code	Port size	Housing number - body only
		Aluminium
3W	3/8" BSP	B18982
4W	1/2" BSP	B19358
8T	1/2" SAE	B19360

Dimensions

mm (inch)

Cartridge only

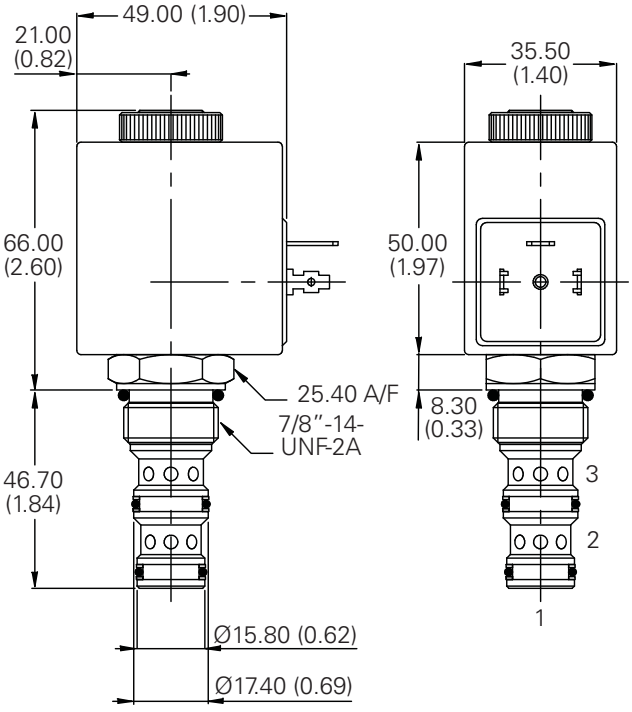

Installation drawing

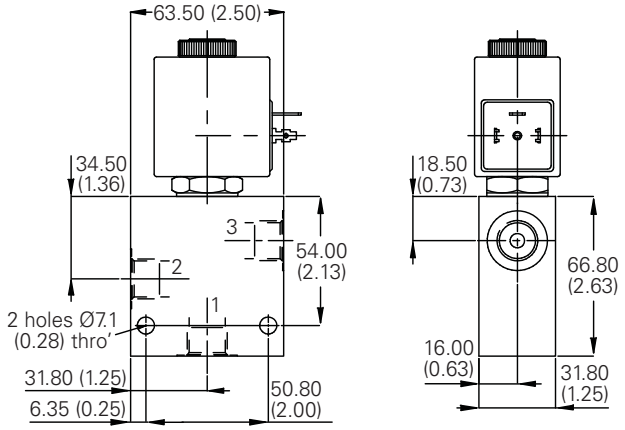

Where measurements are critical request certified drawings. We reserve the right to change specifications without notice.

S526 - Solenoid valve

3-way, 2-position spool type solenoid valve
Up to 35 L/min (9 USgpm) • 210 bar (3000 psi)

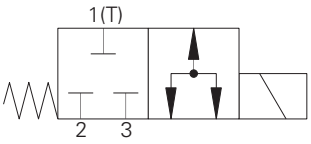

Operation

In the de-energized condition all ports are closed. When energized all ports are open to each other.

Features

- High flow capacity with reduced space requirements.
- No dynamic seals.
- Standard valve bodies and common cavities.
- One-piece encapsulated coil with minimal amperage draw.
- Oil immersed armature solenoid.
- Various coil terminals and voltages.
- Coil interchangeability with Series S5 valves.
- Manual override, seal variations and other options available.
- Sealed coil arrangement to protect stem from corrosion.

Sectional view

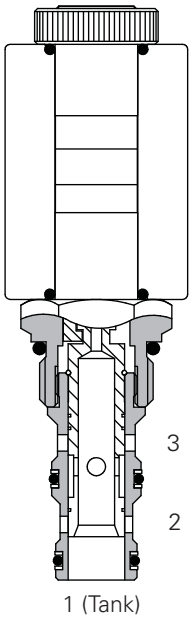

Performance data

Ratings and specifications

Performance data is typical with Viscosity 32 cST (150 SSU)	
Max working pressure	210 bar (3000 psi)
Rated flow	See performance graphs
Nominal flow at ΔP = 5 bar (70 psi)	11 L/min (3 USgpm)
Internal leakage	Less than 120 ml/min past each land 210 bar differential
Temperature range	-30° to +120°C (-22° to +248°F)
Cavity	C-10-3 (see Section M)
Electrical data	See coil data sheet
Torque cartridge into cavity	30 Nm (22 lbs ft)
Mounting position	Unrestricted
Fluids	All general purpose hydraulics fluids such as MIL-H-5606, SAE 10, SAE 20 etc
Seal material	Standard nitrile with PTFE back up rings
Filtration	BS5540/4 Class 18/13 (25 micron or better)
Nominal viscosity range	15 to 250 cSt
Standard housing materials	Aluminium alloy
Coil weight	0.3 kg (0.6 lbs)
Cartridge weight	0.2 kg (0.4 lbs)
Seal kit	SK1030 (Nitrile) SK1030V (Viton®)
Coil part number	C16-*-*/19
Coil voltage available	12, 24 VDC, 110, 220, VAC*

Viton is a registered trademark of E.I. DuPont
*AC coils must be used with a rectifying connector

Description

This valve is a 2 position 3 ported solenoid operated screw in cartridge valve suitable as a float valve connecting all ports together when energized.

Pressure drop

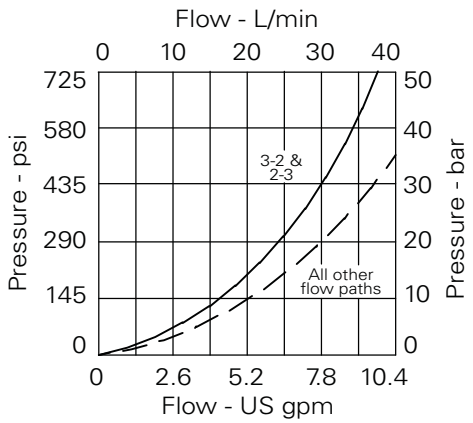

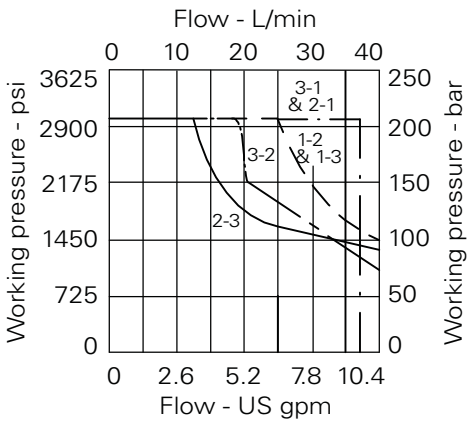

Where measurements are critical request certified drawings. We reserve the right to change specifications without notice.

S526 - Solenoid valve

3-way, 2-position spool type solenoid valve
Up to 35 L/min (9 USgpm) • 210 bar (3000 psi)

Model code

S526	N	*	–	H	24	–	3W
1	2	3		4	5		6

1 Function
S526

2 Seal material
N - Nitrile
V - Viton®

3 Manual override
2 - Screw
(Consult factory for availability).
See page A-960

4 Coil Termination
H - DIN43650
F - Flying leads
DM - Deutsch moulded
Other terminations available on request.

5 Voltage
12 - 12 VDC
24 - 24 VDC
110 - 110 VAC
220 - 220 VAC

6 Port size

Code	Port size	Housing number - body only
		Aluminium
3W	3/8" BSP	B18982
4W	1/2" BSP	B19358
8T	1/2" SAE	B19360

Dimensions

mm (inch)

Cartridge only

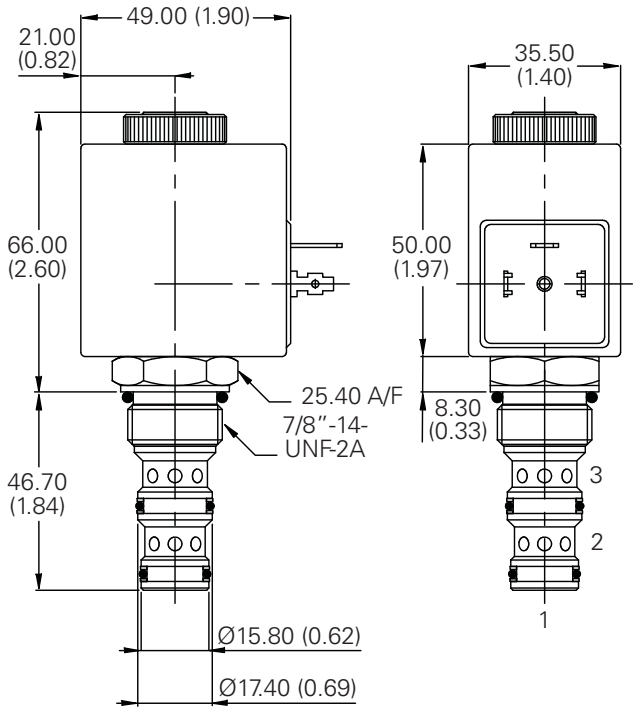

Installation drawing

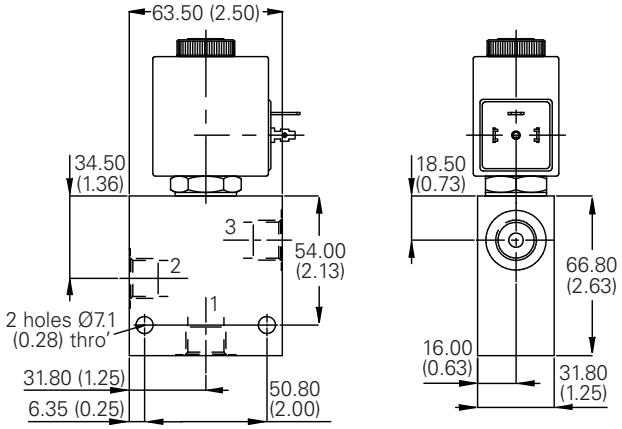

Where measurements are critical request certified drawings. We reserve the right to change specifications without notice.

SV1-10-3/3M/3R - Solenoid valve

3-way, 2-position, spool type solenoid valve
Up to 23 L/min (6 USgpm) • 210 bar (3000 psi)

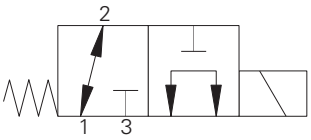

Operation

In the de-energized position this valve allows flow from port 1 to 2 while port 3 is blocked.

In the energized position flow is allowed from port 3 to port 1 while port 2 is blocked.

Features

Hardened, ground and honed working parts to limit leakage. IP69K Tough coil compatibility. Continuously rated. Compact design with low Pressure drop. Rated pressure on all ports.

Sectional view

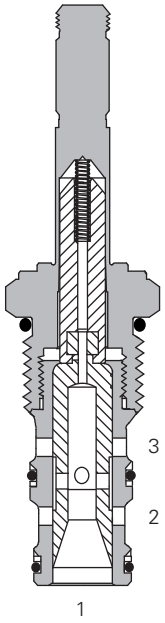

Performance data

Ratings and specifications

Performance data is typical with fluid at 21,8 cSt (105 SUS) and 49° C (120° F)	
Typical application pressure (all ports)	210 bar (3000 psi)
Cartridge fatigue pressure (infinite life)	210 bar (3000 psi)
Rated flow	23L/min (6 USgpm) Max. flow port 1 to 2-10L/min (2.5 USgpm)
Internal leakage	164 cm^3/min (10 in^3/min) max @ 210 bar (3000 psi)
Temperature range	-40° to 120° C (-40° to 248° F)
Coil duty	Continuous from 85% to 110% of normal voltage
Cavity	C-10-3
Fluids	All general purpose hydraulics fluids such as: MIL-H-5606, SAE 10, SAE 20 etc.
Filtration	Cleanliness code 18/16/13
Housing material (standard)	Aluminum
Weight including coil	0,42 kg (0.93 lbs)
Seal kit	889624 (Buna-N), 889628 (Viton®)

Viton is a registered trademark of E.I. DuPont

Description

This is a 3-way 2-position, direct acting, spool type solenoid valve. This valve can be used in applications requiring separate pressure and tank lines, such as a single acting cylinder or any other application where a three way two position solenoid valve is needed.

Pressure drop

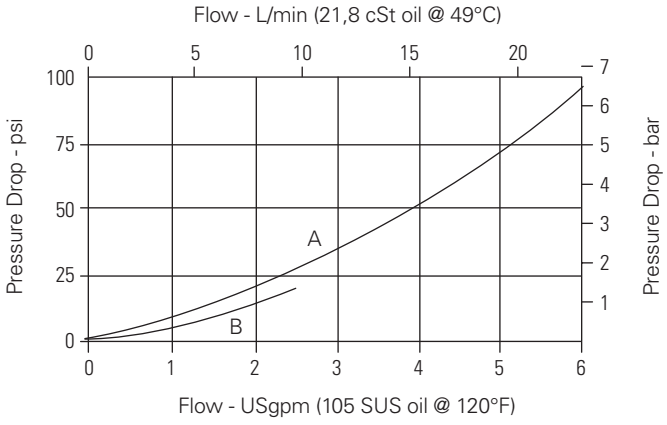

Where measurements are critical request certified drawings. We reserve the right to change specifications without notice.

SV1-10-3/3M/3R - Solenoid valve

3-way, 2-position, spool type solenoid valve
Up to 23 L/min (6 USgpm) • 210 bar (3000 psi)

Model code

SV1	–	10	(V)	–	3	(*)	**	–	****	*	–	00
1		2	3		4	5	6		7	8		9

1 Function
SV1 - Solenoid valve

2 Size
10 - 10 size

3 Seal material
Blank - Buna-N
V - Viton®

4 Style
3 - 3-way, 2 position

5 Manual override option
Blank - No manual override
M - Knob type
R - Cable type

For valve dimensions with Manual override option installed see page A-980.

6 Port size

Code	Port size	Housing number
0	Cartridge only	
3B	3/8" BSPP	02-173358*
6T	SAE6	566162*
2G	1/4" BSPP	876705
3G	3/8" BSPP	876714
6H	SAE 6	876704
8H	SAE 8	876711

*Light duty housing
See section J for housings.

7 Voltage rating
00 - No coil
12D - 12VDC
24D - 24VDC
36D - 36VDC
24A - 24VAC
115A - 115VAC
230A - 230VAC
12B - 12VDC/w diode*
24B - 24VDC/w diode*

*Optional arc suppression diode

8 Connector types
Blank - No coil
G - ISO 440 DIN 43650
Q - Spade terminals
W - Flying lead
N - Deutsch (DC only)
Y - Amp JR (DC only)
D - Metripack 150 male (DC only)
J - Metripack 280 male (DC only)

For coil dimensions see section C.

9 Special features
00 - None

(Only required if valve has Special features, omitted if "00".)

Note: Use J series, 23W coils with this solenoid valve.

Dimensions
mm (inch)

Cartridge only

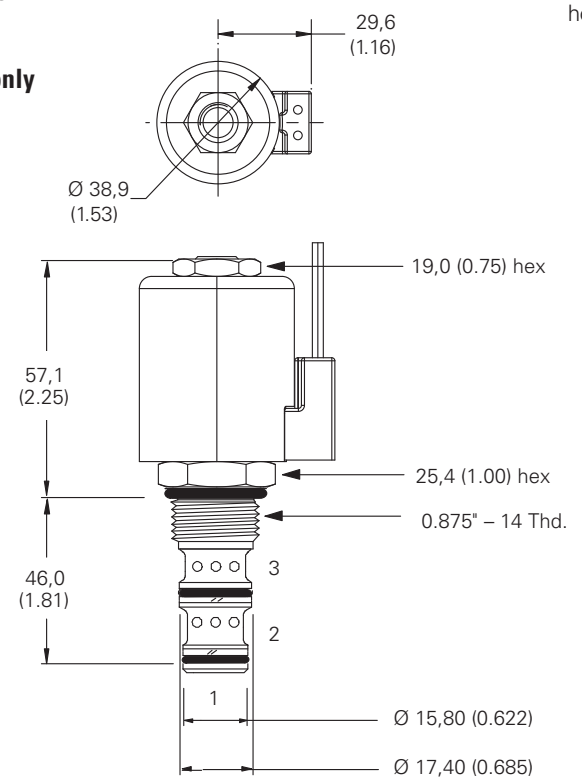

Torque cartridge in aluminum housing 47-54 Nm (35-40 ft lbs).

Note: When solenoid valve is ordered as Cartridge only, coil nut is included.

Installation drawing (Aluminum)

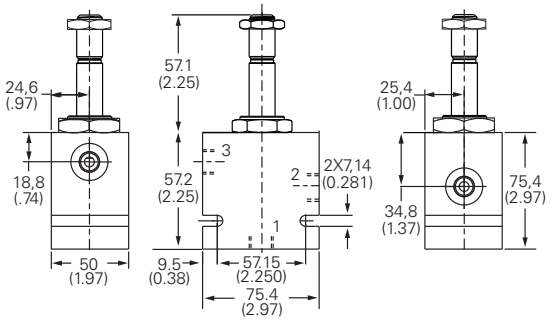

⚠ Warning
Maintain 5-8 Nm (4-6 ft lbs) maximum torque on valve tube nut.

Over tightening may cause valve failure.

Where measurements are critical request certified drawings. We reserve the right to change specifications without notice.

SV11-10-3/3M - Solenoid valve

3-way, 2-position, spool type solenoid valve
Up to 23 L/min (6 USgpm) • 350 bar (5000 psi)

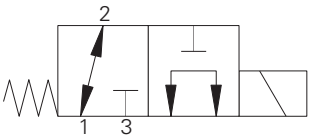

Operation

In the de-energized position this valve allows flow from port 2 to 1 while port 3 is blocked.

In the energized position flow is allowed from port 1 to port 3 while port 2 is blocked.

Features

Hardened, ground and honed working parts to limit leakage. IP69K Tough coil compatibility. Continuously rated. Compact design with low Pressure drop. Rated pressure on all ports. Working pressure 350 bar.

Sectional view

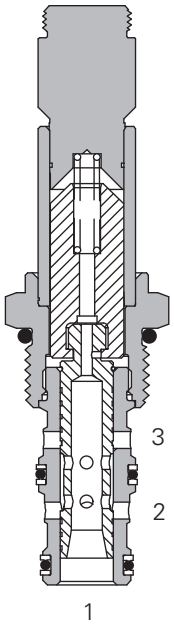

Performance data

Ratings and specifications

Performance data is typical with fluid at 21,8 cSt (105 SUS) and 49° C (120° F)	
Typical Application pressure (all ports)	350 bar (5000 psi)
Cartridge fatigue pressure (infinite life)	310 bar (4500 psi)
Rated Flow	23L/min (6 USgpm)
Internal leakage, port 2 to port 1	164 cm^3/min (10 in^3/min) max at 350 bar (5000 psi)
Temperature range	-40° to 100° C (-40° to 212° F)
Coil Duty	Continuous from 85% to 110% of nominal voltage
Cavity	C-10-3
Fluids	All general purpose hydraulics fluids such as: MIL-H-5606, SAE 10, SAE 20, etc.
Filtration	Cleanliness code 18/16/13
Housing material (standard)	Steel
Weight Cartridge only	0,19 kg (0.42 lbs)
Seal kit	889624 (Buna-N) 889628 (Viton®)

Viton is a registered trademark of E.I. DuPont

Description

This is a 3-way 2-position, high pressure, direct acting, spool type solenoid valve. This valve can be used in applications requiring separate pressure and tank lines, such as a single acting cylinder or any other application where a three way two position solenoid valve is needed.

Pressure drop

Cartridge only

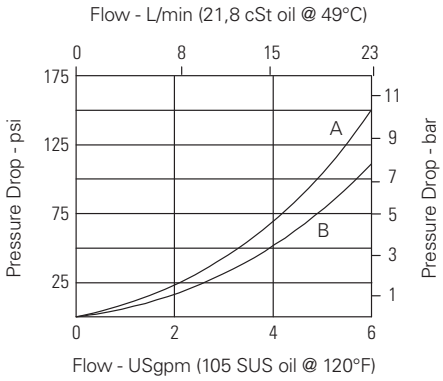

Pressure drop vs. Flow

A - Port 3 to port 1
B - Port 1 to port 2

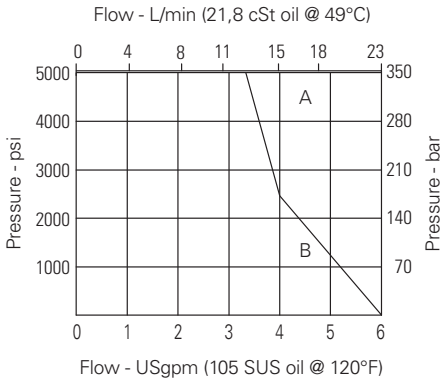

Operating limits

A - Normally open, normally closed
B - Selector 1 to 2

Where measurements are critical request certified drawings. We reserve the right to change specifications without notice.

SV11-10-3/3M - Solenoid valve

3-way, 2-position, spool type solenoid valve
Up to 23 L/min (6 USgpm) • 350 bar (5000 psi)

Model code

SV11	–	10	(V)	–	3	(M)	–	(S)	**	–	****	*	H	–	00
1		2	3		4	5		6	7		8	9	10		11

1 Function
SV11 - Solenoid valve

2 Size
10 - 10 size

3 Seal material
Blank - Buna-N
V - Viton®

4 Style
3 - 3 way, 2 position

5 Manual override option
Blank - No manual override
M - Manual overrride

For valve dimensions with Manual override option installed see page A-980.

6 Valve housing material
Blank - Cartridge only
S - Steel

7 Port size

Code	Port size	Housing number
0	Cartridge only	
2G	1/4" BSPP	02-175127
3G	3/8" BSPP	02-175128
6T	SAE 6	02-175124
8T	SAE 8	02-175125

See section J for housing details.

8 Voltage rating
00 - No coil
12D - 12VDC
24D - 24VDC
36D - 36VDC
24A - 24VAC
115A - 115VAC
230A - 230VAC
12B - 12VDC/w diode*
24B - 24VDC/w diode*

*Optional arc suppression diode

9 Connector types
Blank - No coil
G - ISO 440 DIN 43650
Q - Spade terminals
W - Flying lead
N - Deutsch (DC only)
Y - Amp JR (DC only)
D - Metripack 150 male (DC only)
J - Metripack 280 male (DC only)

10 Coil series
H - 10 series, 29 W

For coil dimensions see section C.

11 Special features
00 - None

(Only required if valve has Special features, omitted if "00".)

Dimensions
mm (inch)

Cartridge only

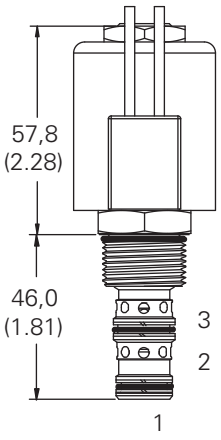

Torque cartridge in steel housing 68-75 Nm (50-55 ft. lbs)

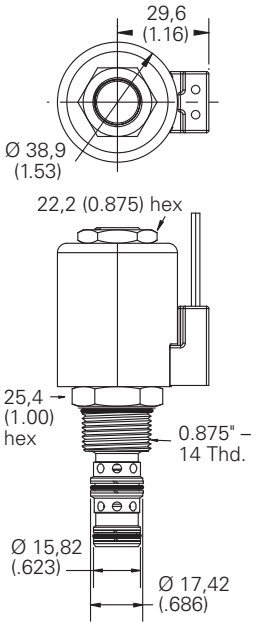

Note: For applications above 210 bar please consult our technical department or use the steel body option.

Installation drawing

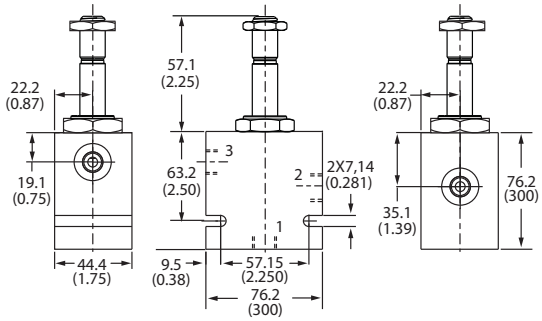

⚠ Warning
Maintain 5-8 Nm (4-6 ft. lbs) maximum torque on valve tube nut.

Over tightening may cause valve failure.

Where measurements are critical request certified drawings. We reserve the right to change specifications without notice.

SV11A/B-10-3 - Solenoid valve

3-way, 2-position, spool type solenoid valve
Up to 23 L/min (6 USgpm) • 350 bar (5000 psi)

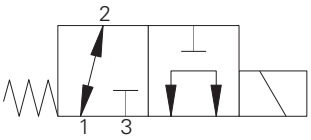

Operation

In the de-energized position this valve allows flow from port 1 to 2 while port 3 is blocked.

In the energized position flow is allowed from port 3 to port 1 while port 2 is blocked.

Features

Hardened, ground and honed working parts to limit leakage. IP69K Tough coil compatibility. Continuously rated. Compact design with low Pressure drop. Rated pressure on all ports. Working pressure 350 bar.

Sectional view

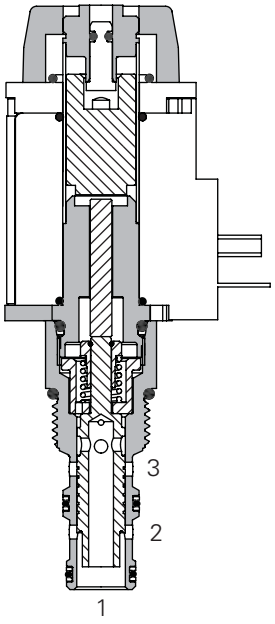

Performance data

Ratings and specifications

Performance data is typical with fluid at 21,8 cSt (105 SUS) and 49°C (120°F)		
Typical application pressure (all ports except port 1)		350 bar (5000 psi)
Typical application pressure at port 1		210 bar (3000 psi)
Cartridge fatigue pressure (infinite life)		350 bar (5000 psi)
Rated flow	SV11A-10-3 SV11B-10-3	17 L/min (5 USgpm) 23 L/min (6 USgpm)
Internal leakage		350 cc/min (21 in3/min) @ 210 bar (3000 psi)
Temperature range		-40° to 120°C (-40° to 248°F)
Coil duty		Continuos from 85% to 110% of nominal voltage
Cavity		C-10-3
Fluids		MIL-H-5606, SAE 10, SAE 20, etc.
Filtration Cleanliness code		18/16/13
Standard housing materials		Steel
Weight including coil	SV11A-10-3 SV11B-10-3	0.42 kg (0.92 lbs)
Seal kit		Buna-N), (Viton®)

Viton is a registered trademark of E.I. DuPont

Description

This is a 3-way 2-position, high pressure, direct acting, spool type solenoid valve. This valve can be used in applications requiring separate pressure and tank lines, such as a single acting cylinder or any other application where a three way two position solenoid valve is needed.

Pressure drop

Cartridge only

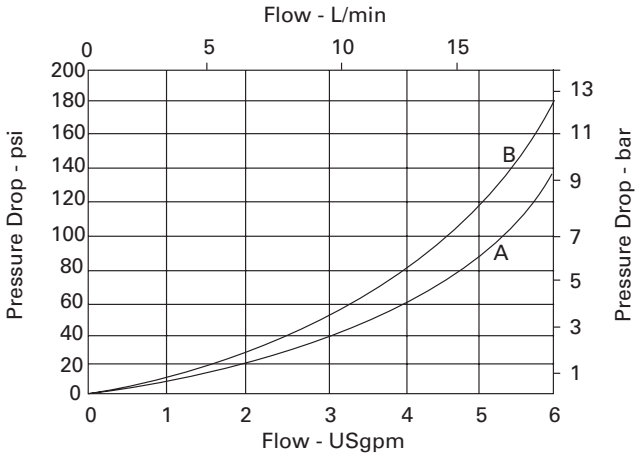

Pressure drop vs. Flow

A - Port 1 to port 2
B - Port 3 to port 1

Where measurements are critical request certified drawings. We reserve the right to change specifications without notice.

SV11A/B-10-3 - Solenoid valve

3-way, 2-position, spool type solenoid valve
Up to 23 L/min (6 USgpm) • 350 bar (5000 psi)

Model code

SV11	*	–	10	*	3P	–	****	–	****	–	*	*	**	–	**
1	2		3	4	5		6		7		8	9	10		11

1 Function
SV11 - Solenoid valve

2 Max flow
A - 17 L/min (5 USgpm)
B - 23 L/min (6 USgpm)

3 Size
10 - 10 Size

4 Seal material
Blank - Buna-N
V - Viton®

5 Syle
3P - 3 way push type manual overrride

For valve dimensions with Manual override option installed see page A-980.

6 Port size

Code	Port size	Housing number	
		Aluminium	Steel
0	Cartridge only		
A2G	1/4" BSPP	876705	
A3G	3/8" BSPP	876710	
A6H	SAE 6	876704	
A8H	SAE 8	876711	
S2G	1/4" BSPP		02-175127
S3G	1/3" BSPP		02-175128
S6T	SAE 6		02-175124
S8T	SAE 8		02-175125

See section J for housing details.

7 Voltage rating
00 - No coil
12D - 12VDC
24D - 24VDC
12B - 12VDC/w diode*
24B - 24VDC/w diode*

*Optional arc suppression diode

8 Connector types
Blank - No coil
G - ISO 440 DIN 43650
W - Flying lead
C - Deutch on Leads
H - Metripak 150 on Leads
F - Weatherpak Male on Leads

For coil dimensions see section C.

9 Coil types
Blank - No coil
L - L series, (30W EN 490) used for SV11A
R - R series, (30W) used for SV11B-10

10 Coil special features
Blank - No coil
00 - No special feature

11 Special features
00 - None

(Only required if valve has Special features, omitted if "00".)

Dimensions
mm (inch)

Torque cartridge in aluminum housing 47-54 Nm (35-40 ft. lbs)

Torque cartridge in steel housing 68-75 Nm (50-55 ft. lbs)

Note: When solenoid vale is ordered as Cartridge only, coil nut is included.

Cartridge only

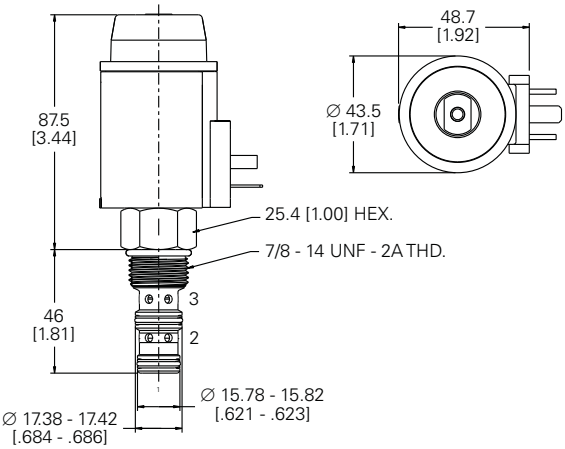

Installation drawing (Steel)

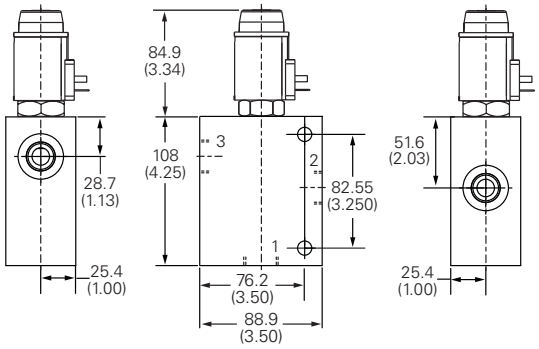

⚠ Warning
Aluminum housings can be used for pressures up to 210 bar (3000 psi). Steel housings **must** be used for operating pressures **above** 210 bar (3000 psi).

⚠ Warning
Maintain 2.5-3 Nm (1.8-2.2 ft. lbs) maximum torque on valve tube nut. Over tightening may cause valve failure.

Where measurements are critical request certified drawings. We reserve the right to change specifications without notice.

SV4-10-3/3P/3S - Solenoid valve

3-way, 2-position spool type solenoid valve
Up to 23 L/min (6 USgpm) • 210 bar (3000 psi)

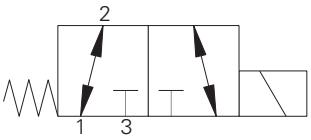

Operation

In the de-energized position this valve allows flow from port 2 to 1 while port 3 is blocked.

In the energized position flow is allowed from port 2 to port 3 while port 1 is blocked.

Features

Hardened, ground and honed working parts to limit leakage. IP69K Tough coil compatibility. Continuously rated. Compact design with low Pressure drop. Rated pressure on all ports.

Sectional view

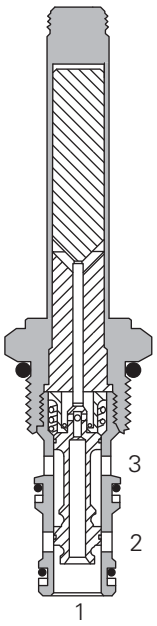

Performance data

Ratings and specifications

Performance data is typical with fluid at 21,8 cST (105 SUS) and 49°C (120°F)	
Typical application pressure	210 bar (3000 psi)* *Flow from P1 to P2 must be less than 7,6 L/min (2 USgpm)
Cartridge fatigue pressure (infinite life)	210 bar (3000 psi)
Rated flow	23 L/min (6 USgpm) Max. flow port 1 to port 2-10 L/min (2.5 USgpm)
Internal leakage	164 cm^3/min (10 in^3/min) max @ 210 bar (3000 psi)
Temperature range	-40° to 120°C (-40° to 248°F)
Coil duty	Continuous from 85% to 110% of nominal voltage
Cavity	C-10-3
Fluids	All general purpose hydraulic fluids such as: MIL-H-5606, SAE 10, SAE 20 etc.
Filtration	Cleanliness code 18/16/13
Housing material (standard)	Aluminum
Weight including coil	0,42 kg (0.93 lbs)
Seal kit	889624 (Buna-N), 889628 (Viton®)

Viton is a registered trademark of E.I. DuPont

Description

This is a 3-way 2-position, direct acting, spool type solenoid valve. This valve can be used in applications requiring separate pressure and tank lines, such as a single acting cylinder or any other application where a three way two position solenoid valve is needed.

Pressure drop

Cartridge only

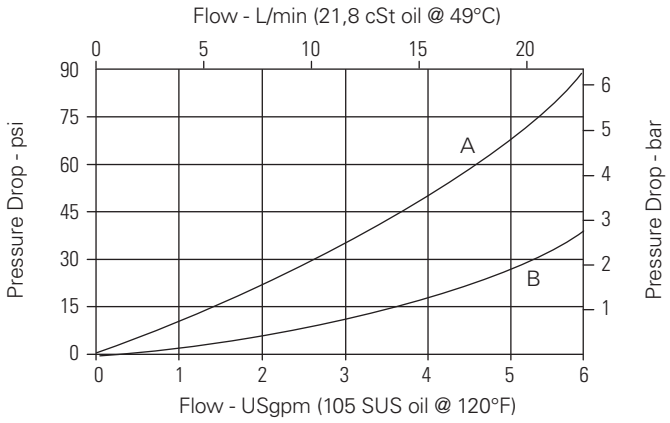

A - Port 3 to port 2 energized
B - Port 2 to port 1 de-energized

Where measurements are critical request certified drawings. We reserve the right to change specifications without notice.

SV4-10-3/3P/3S - Solenoid valve

3-way, 2-position spool type solenoid valve
Up to 23 L/min (6 USgpm) • 210 bar (3000 psi)

Model code

SV4 – 10 (V) – 3 (*) – ** – ** * – 00**

1 2 3 4 5 6 7 8 9

1 Function
SV4 - Solenoid valve

2 Size
10 - 10 size

3 Seal material
Blank - Buna-N
V - Viton®

4 Style
3 - 3-way, 2 position

5 Manual override option
Blank - No manual override
M - Manual override
P - Push type
S - Screw type

For valve dimensions with Manual override option installed see page A-980.

6 Port size

Code	Port size	Housing number
0	Cartridge only	
3B	3/8" BSPP	02-173358*
6T	SAE6	566162*
2G	1/4" BSPP	876705
3G	3/8" BSPP	876714
6H	SAE 6	876704
8H	SAE 8	876711

*Light duty housing.
See section J for housings.

7 Voltage rating
00 - No coil
12D - 12VDC
24D - 24VDC
36D - 36VDC
24A - 24VAC
115A - 115VAC
230A - 230VAC
12B - 12VDC/w diode*
24B - 24VDC/w diode*

*Optional arc suppression diode.

8 Connector types
Blank - No coil
G - ISO 4400 DIN 43650
Q - Spade terminals
W - Flying lead
N - Deutsch (DC only)
Y - Amp JR (DC only)
D - Metripack 150 male (DC only)
J - Metripack 280 male (DC only)

For coil dimensions see section C.

9 Special features
00 - None

(Only required if valve has Special features, omitted if "00.")

Note: Use J series, 23 W coils with this solenoid valve.

Dimensions
mm (inch)

Cartridge only

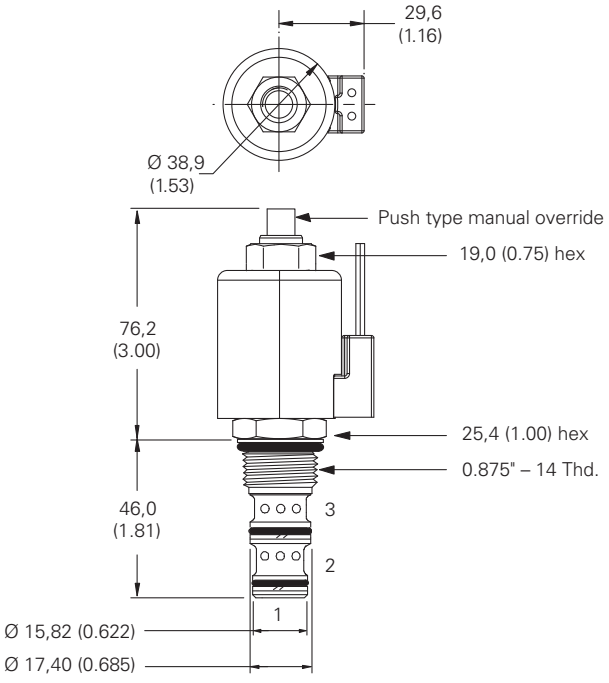

Torque cartridge in aluminum housing 47-54 Nm (35-40 ft lbs)

Note: When solenoid valve is ordered as Cartridge only, coil nut is included.

Installation drawing

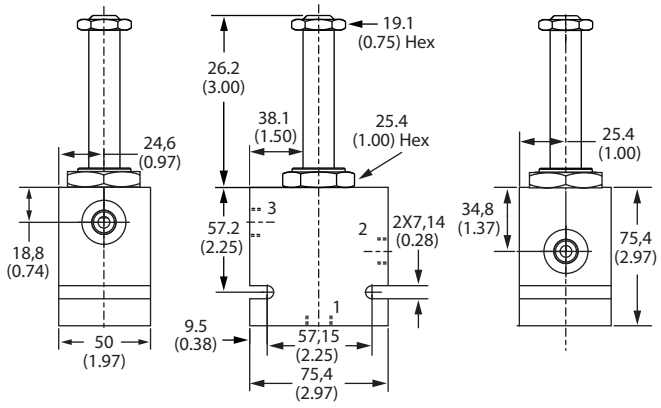

⚠ Warning
Maintain 5-8 Nm (4-6 ft lbs) maximum torque on valve tube nut.

Over tightening may cause valve failure.

⚠ Warning
Flow from port 1 to port 2 must be less than 7,6 L/min (2 USgpm).

Where measurements are critical request certified drawings. We reserve the right to change specifications without notice.

SV1M-12-3 - Solenoid valve

3-way, 2-position spool type solenoid valve
Up to 34 L/min (9 USgpm) • 210 bar (3000 psi)

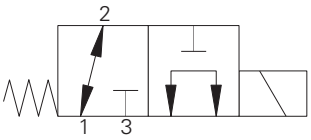

Operation

In the de-energized position this valve allows flow from port 1 to 2 while port 3 is blocked.

In the energized position flow is allowed from port 3 to port 1 while port 2 is blocked.

Features

Hardened, ground and honed working parts to limit leakage. IP69K Large ToughCoil compatibility. Continuously rated. Compact design with low Pressure drop. Rated pressure on all ports.

Sectional view

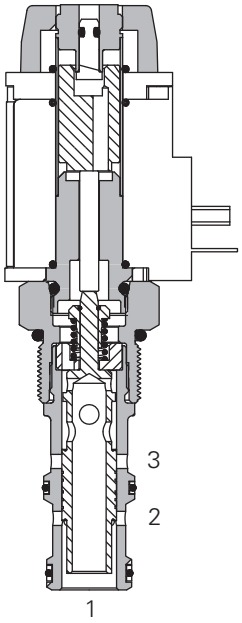

Performance data

Ratings and specifications

Performance data is typical with fluid at 21,8 cST (105 SUS) and 49°C (120°F)	
Typical application pressure	210 bar (3000 psi)
Cartridge fatigue pressure (infinite life)	210 bar (3000 psi)
Rated flow	42 L/min (11 USgpm) Max flow port 1 to port 2-34 L/min (9 USgpm)
Internal leakage	300 cm^3/min (21.5 in^3/min) max @ 210 bar (3000 psi)
Temperature range	-40° to 120°C (-40° to 248°F)
Coil duty	Continuous from 85% to 110% of nominal voltage
Cavity	C-12-3
Fluids	All general purpose hydraulic fluids such as: MIL-H-5606, SAE 10, SAE 20 etc.
Filtration	Cleanliness code 18/16/13
Housing material (standard)	Aluminum
Weight including coil	0,86 kg (1.9 lbs)
Seal kit	9900171-000 (Buna-N), 9900172-000 (Viton®)

Viton is a registered trademark of E.I. DuPont

Description

This is a 3-way 2-position, direct acting, spool type solenoid valve. This valve can be used in applications requiring separate pressure and tank lines, such as a single acting cylinder or any other application where a three way two position solenoid valve is needed.

Pressure drop

Cartridge only

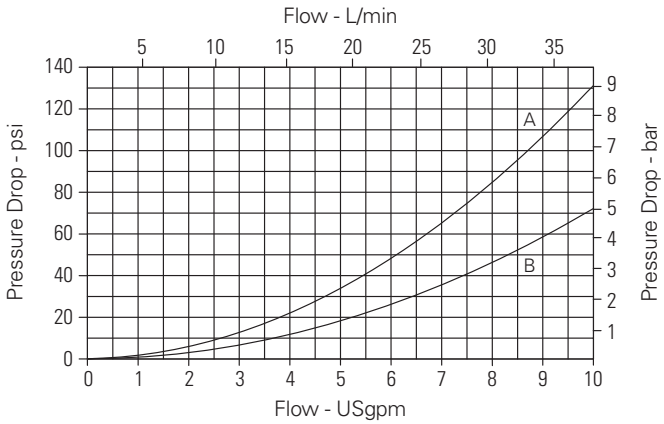

A - Port 3 to port 1 energized
B - Port 1 to port 2 de-energized

Where measurements are critical request certified drawings. We reserve the right to change specifications without notice.

SV1M-12-3 - Solenoid valve

3-way, 2-position spool type solenoid valve
Up to 34 L/min (9 USgpm) • 210 bar (3000 psi)

Model code

SV1	*	–	12	*	–	3P	–	****	–	****	*	*	**	–	**
1	2		3	4		5		6		7	8	9	10		11

1 Function
SV1 - Solenoid valve

2 Max flow
M - 42 L/min (11 USgpm)

3 Size
12 - 12 size

4 Seal material
Blank - Buna-N
V - Viton®

5 Style
3P - 3 way, push type manual override

6 Port size

Code	Port size	Housing number
0	Cartridge only	
A6G	3/4" BSPP	02-161816
A12H	SAE 12	02-160646

7 Voltage rating
00 - No coil
12D - 12VDC
24D - 24VDC
12B - 12VDC/w diode*
24B - 24VDC/w diode*

8 Connector types
Blank - No coil
W - Flying lead
N - Deutsch male, DT04-2P, integrated

For coil dimensions see section C.

9 Coil types
Blank - No coil
R - R series (30W) Large ToughCoil

10 Coil special features
Blank - No coil
00 - No special feature

11 Special features
00 - None
(Only required if valve has Special features, omitted if "00".)
SF - Soft shift

Dimensions

mm (inch)

Cartridge only

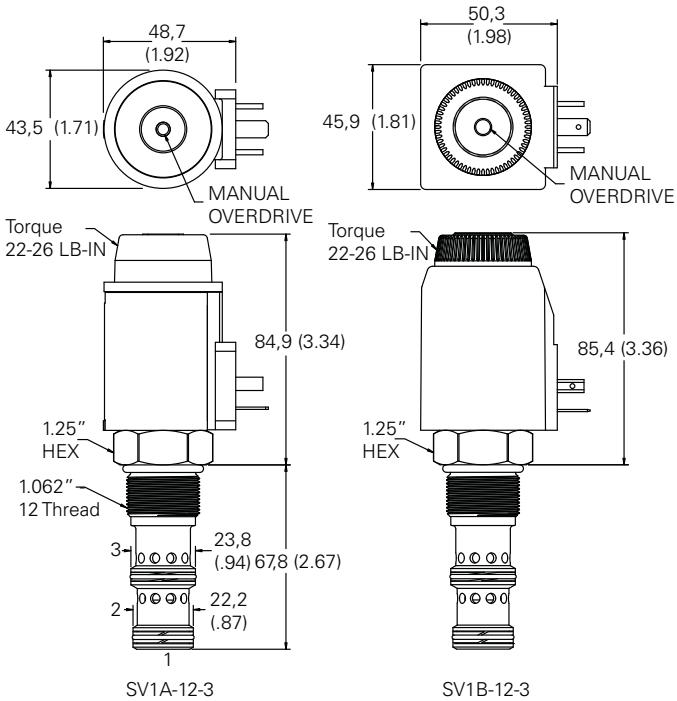

SV1A-12-3 SV1B-12-3

Torque cartridge in aluminum housing 81-95 Nm (60-70 ft lbs)

Note: When solenoid valve is ordered as Cartridge only, coil nut is included.

Installation drawing

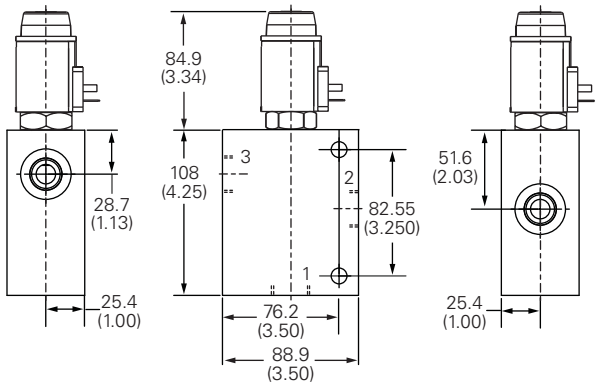

⚠ Warning
Maintain 2.5-3 Nm (1.8-2.2 ft lbs) maximum torque on valve tube nut. Over tightening may cause valve failure.

Where measurements are critical request certified drawings. We reserve the right to change specifications without notice.

SV11M-12-3 - Solenoid valve

3-way, 2-position spool type solenoid valve
Up to 42 L/min (11 USgpm) • 350 bar (5000 psi)

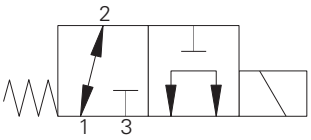

Operation

In the de-energized position this valve allows flow from port 1 to 2 while port 3 is blocked.

In the energized position flow is allowed from port 3 to port 1 while port 2 is blocked.

Features

Hardened, ground and honed working parts to limit leakage. IP69K Large ToughCoil compatibility. Continuously rated. Compact design with low Pressure drop. Rated pressure on all ports. Working pressure 350 bar.

Sectional view

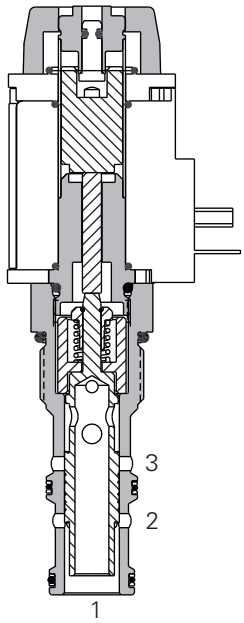

Performance data

Ratings and specifications

Performance data is typical with fluid at 21,8 cSt (105 SUS) and 49°C (120°F)	
Typical application pressure (all ports except port 1)	350 bar (5000 psi)
Typical application pressure at port 1	210 bar (3000 psi)
Cartridge fatigue pressure (infinite life)	350 bar (5000 psi)
Rated flow	42 L/min (11 USgpm) Max. flow port 1 to port 2 - 34 L/min (9 USgpm)
Internal leakage	350 cc/min (21.5 in3/min) @ 210 bar (3000 psi)
Temperature range	-40° to 120°C (-40° to 248°F)
Coil duty	Continuos from 85% to 110% of nominal voltage
Cavity	C-12-3
Fluids	All general purpose hydraulic fluids such as: MIL-H-5606, SAE 10, SAE 20, etc.
Filtration Cleanliness code	18/16/13
Standard housing materials	Steel
Weight including coil	0.86 kg (1.9 lbs)
Seal kit	9900171-000 Buna-N), 9900172-000 (Viton®)

Viton is a registered trademark of E.I. DuPont

Description

This is a 3-way 2-position, high pressure, direct acting, spool type solenoid valve. This valve can be used in applications requiring separate pressure and tank lines, such as a single acting cylinder or any other application where a three way two position solenoid valve is needed.

Pressure drop

Cartridge only

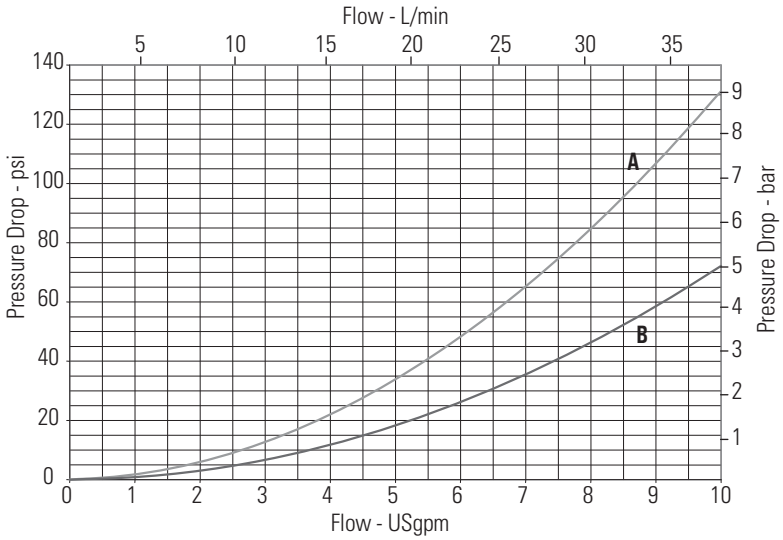

A - Port 3 to port 1 energized
B - Port 1 to port 2 de-energized

Where measurements are critical request certified drawings. We reserve the right to change specifications without notice.

SV11M-12-3 - Solenoid valve

3-way, 2-position spool type solenoid valve
Up to 42 L/min (11 USgpm) • 350 bar (5000 psi)

Model code

SV11	*	–	12	*	3P	–	****	–	****	–	*	*	**	–	**
1	2		3	4	5		6		7		8	9	10		11

1 Function
SV11 - Solenoid valve

2 Max flow
M - 42 L/min (11 USgpm)

3 Size
12 - 12 size

4 Seal material
Blank - Buna-N
V - Viton®

5 Style
3P - 3 way, push type manual override

6 Port size
0 - Cartridge only

Code	Port size	Housing number	
		Aluminium	Steel
A6G	3/4" BSPP	02-161816	
A12H	SAE 12	02-160646	
S4G	1/2" BSPP		02-169815
S6G	3/4" BSPP		02-169814
S10T	SAE 10		02-161070
S12T	SAE 12		02-169816

7 Voltage rating
00 - No coil
12D - 12VDC
24D - 24VDC
12B - 12VDC/w diode*
24B - 24VDC/w diode*

8 Connector types
Blank - No coil
W - Flying lead
N - Deutsch male, DT04-2P, integrated
For coil dimensions see section C.

9 Coil types
Blank - No coil
R - R series (30W) Large ToughCoil

10 Coil special features
Blank - No coil
00 - No special feature

11 Special features
00 - None
(Only required if valve has Special features, omitted if "00".)
SF - Soft shift

Dimensions

mm (inch)

Torque cartridge in aluminum housing 81-95 Nm (60-70 ft. lbs)

Torque cartridge in steel housing 102-115 Nm (75-85 ft. lbs)

Note: When solenoid vale is ordered as Cartridge only, coil nut is included.

Cartridge only

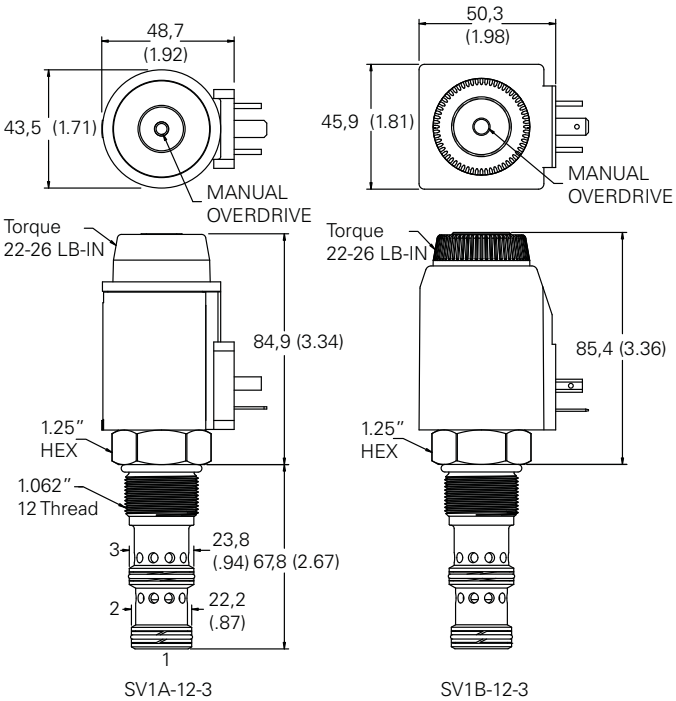

SV1A-12-3 SV1B-12-3

Installation drawing (Steel)

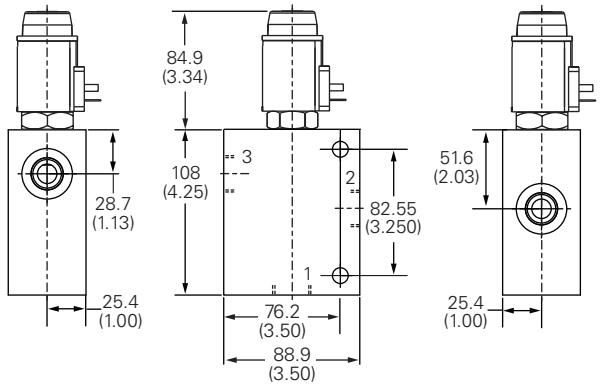

⚠ Warning
Maintain 2.5-3 Nm (1.8-2.2 ft lbs) maximum torque on valve tube nut. Over tightening may cause valve failure.

⚠ Warning
Aluminum housings can be used for pressures up to 210 bar (3000 psi). Steel housings **must** be used for operating pressures **above** 210 bar (3000 psi).

Where measurements are critical request certified drawings. We reserve the right to change specifications without notice.

SV2M-12-3P - Solenoid valve

3-way, 2-position, spool type solenoid valve
Up to 34 L/min (9 USgpm) • 210 bar (3000 psi)

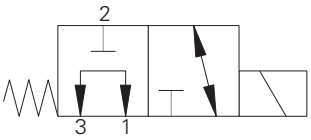

Operation

In the de-energized position this valve allows flow from port 1 to 3 while port 2 is blocked.

In the energized position flow is allowed from port 2 to port 1 while port 3 is blocked.

Features

Hardened, ground and honed working parts to limit leakage. IP69K Large ToughCoil compatibility. Continuously rated. Compact design with low Pressure drop. Rated pressure on all ports.

Sectional view

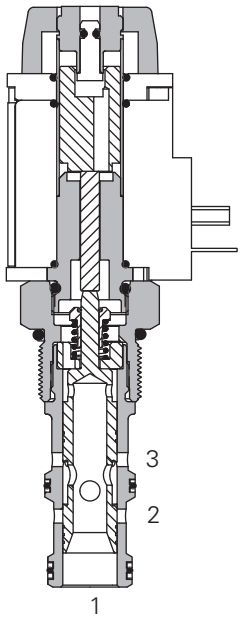

Performance data

Ratings and specifications

Performance data is typical with fluid at 21,8 cST (105 SUS) and 49°C (120°F)	
Typical application pressure	210 bar (3000 psi)
Cartridge fatigue pressure (infinite life)	210 bar (3000 psi)
Rated flow	38 L/min (10 USgpm) Max flow port 1 to port 3-34 L/min (9 USgpm)
Internal leakage	300 cm^3/min (21.5 in^3/min) max @ 210 bar (3000 psi)
Temperature range	-40° to 120°C (-40° to 248°F)
Coil duty	Continuous from 85% to 110% of nominal voltage
Cavity	C-12-3
Fluids	All general purpose hydraulic fluids such as: MIL-H-5606, SAE 10, SAE 20, etc.
Filtration	Cleanliness code 18/16/13
Housing material (standard)	Aluminum
Weight including coil	0,86 kg (1.9 lbs)
Seal kit	9900171-000 (Buna-N), 9900172-000 (Viton®)

Viton is a registered trademark of E.I. DuPont

Description

This is a 3-way 2-position, direct acting, spool type solenoid valve. This valve can be used in applications requiring separate pressure and tank lines, such as a single acting cylinder or any other application where a three way two position solenoid valve is needed.

Pressure drop

Cartridge only

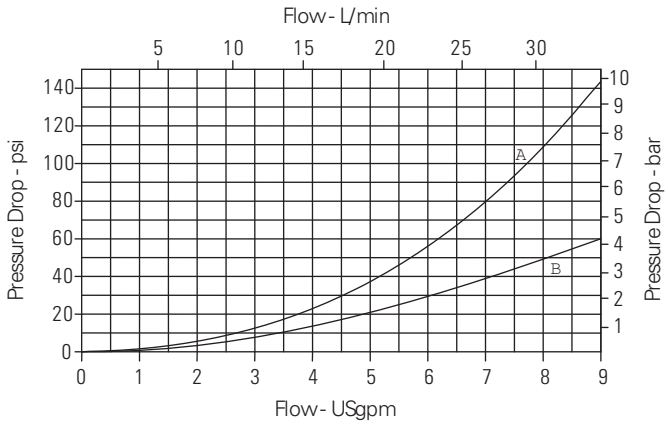

A - Port 2 to port 1 energized
B - Port 1 to port 3 de-energized

Where measurements are critical request certified drawings. We reserve the right to change specifications without notice.

SV2M-12-3P - Solenoid valve

3-way, 2-position, spool type solenoid valve
Up to 34 L/min (9 USgpm) • 210 bar (3000 psi)

Model code

SV2	*	– 12	*	– 3P	– ****	– ****	*	*	**	– **
1	2	3	4	5	6	7	8	9	10	11

1 Function
SV2 - Solenoid valve

2 Max flow
M - 38 L/min (10 USgpm)

3 Size
12 - 12 size

4 Seal material
Blank - Buna-N
V - Viton®

5 Style
3P - 3 way, push type manual override

6 Port size

Code	Port size	Housing number
0	Cartridge only	
A6G	3/4" BSPP	02-161816
A12H	SAE 12	02-160646

7 Voltage rating
00 - No coil
12D - 12VDC
24D - 24VDC
12B - 12VDC/w diode*
24B - 24VDC/w diode*
*Optional arc suppression diode.

8 Connector types
Blank - No coil
W - Flying lead
N - Deutsch male, DT04-2P, integrated
For coil dimensions see section C.

9 Coil types
Blank - No coil
R - R series (30W) Large ToughCoil

10 Coil special features
Blank - No coil
00 - No special feature

11 Special features
00 - None
(Only required if valve has Special features, omitted if "00".)
SF - Soft shift

Dimensions
mm (inch)

Torque cartridge in aluminum housing 81-95 Nm (60-70 ft lbs)

Note: When solenoid valve is ordered as Cartridge only, coil nut is included.

Cartridge only

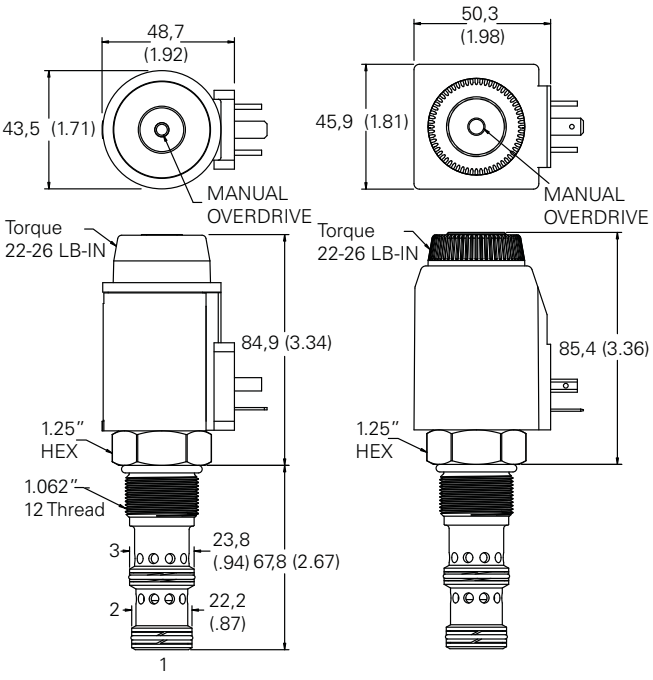

SV2A-12-3 SV2B-12-3

Installation drawing

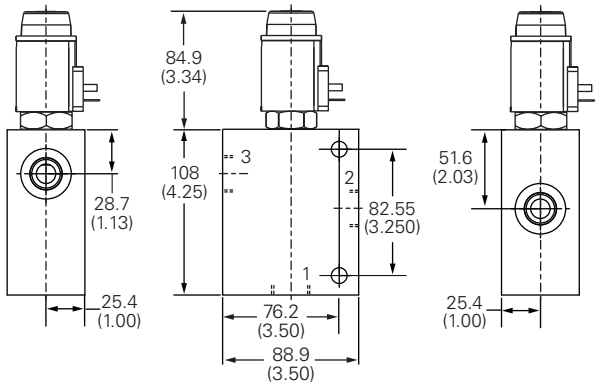

⚠ Warning
Maintain 2.5-3 Nm (1.8-2.2 ft lbs) maximum torque on valve tube nut. Over tightening may cause valve failure.

Where measurements are critical request certified drawings. We reserve the right to change specifications without notice.

SV12M-12-3 - Solenoid valve

3-way, 2-position, spool type solenoid valve
Up to 34 L/min (9 USgpm) • 350 bar (5000 psi)

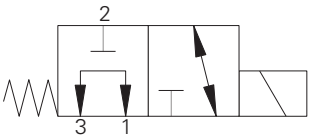

Operation

In the de-energized position this valve allows flow from port 1 to 3 while port 2 is blocked.

In the energized position flow is allowed from port 2 to port 1 while port 3 is blocked.

Features

Hardened, ground and honed working parts to limit leakage. IP69K Large ToughCoil compatibility. Continuously rated. Compact design with low Pressure drop. Rated pressure on all ports. Working pressure 350 bar.

Sectional view

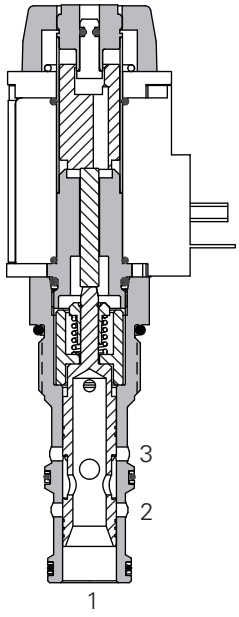

Performance data

Ratings and specifications

Performance data is typical with fluid at 21,8 cSt (105 SUS) and 49°C (120°F)	
Typical application pressure (all ports except port 1)	350 bar (5000 psi)
Typical application pressure at port 1	210 bar (3000 psi)
Cartridge fatigue pressure (infinite life)	350 bar (5000 psi)
Rated flow	38 L/min (10 USgpm) Max. flow port 1 to port 3 - 34 L/min (9 USgpm)
Internal leakage	350 cc/min (21.5 in^3/min) @ 210 bar (3000 psi)
Temperature range	-40° to 120°C (-40° to 248°F)
Coil duty	Continuos from 85% to 110% of nominal voltage
Cavity	C-12-3
Fluids	All general purpose hydraulic fluids such as: MIL-H-5606, SAE 10, SAE 20, etc.
Filtration Cleanliness code	18/16/13
Standard housing materials	Steel
Weight including coil	0.86 kg (1.9 lbs)
Seal kit	9900171-000 Buna-N), 9900172-000 (Viton®)

Viton is a registered trademark of E.I. DuPont

Description

This is a 3-way 2-position, high pressure, direct acting, spool type solenoid valve. This valve can be used in applications requiring separate pressure and tank lines, such as a single acting cylinder or any other application where a three way two position solenoid valve is needed.

Pressure drop

Cartridge only

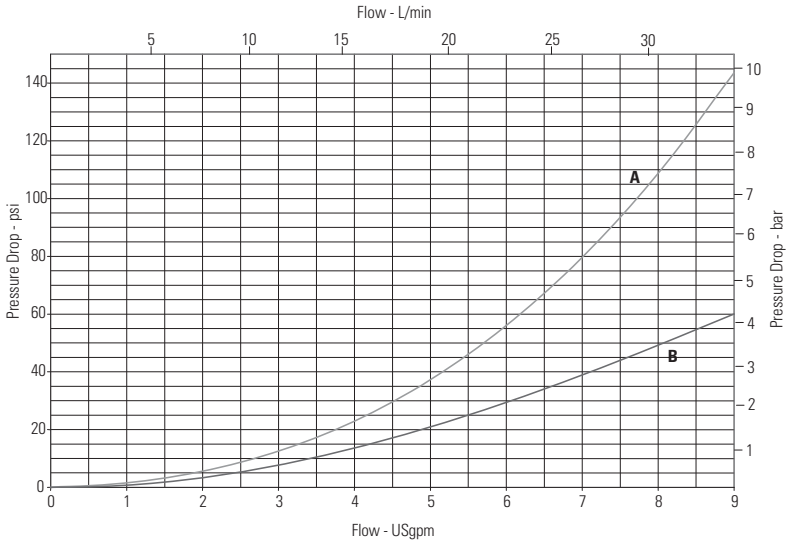

A - Port 2 to port 1 energized
B - Port 1 to port 3 de-energized

Where measurements are critical request certified drawings. We reserve the right to change specifications without notice.

SV12M-12-3 - Solenoid valve

3-way, 2-position, spool type solenoid valve
Up to 34 L/min (9 USgpm) • 350 bar (5000 psi)

Model code

SV12	*	– 12	*	– 3P	– ****	– ****	*	*	**	– **
1	2	3	4	5	6	7	8	9	10	11

1 Function
SV12 - Solenoid valve

2 Max flow
M - 38 L/min (10 USgpm)

3 Size
12 - 12 size

4 Seal material
Blank - Buna-N
V - Viton®

5 Style
3P - 3 way, push type manual override

6 Port size
0 - Cartridge only

Code	Port size	Housing number	
		Aluminium	Steel
A6G	3/4" BSPP	02-161816	
A12H	SAE 12	02-160646	
S4G	1/2" BSPP		02-169815
S6G	3/4" BSPP		02-169814
S10T	SAE 10		02-161070
S12T	SAE 12		02-169816

7 Voltage rating
00 - No coil
12D - 12VDC
24D - 24VDC
12B - 12VDC/w diode*
24B - 24VDC/w diode*
*Optional arc suppression diode.

8 Connector types
Blank - No coil
W - Flying lead
N - Deutsch male, DT04-2P, integrated
For coil dimensions see section C.

9 Coil types
Blank - No coil
R - R series (30W) Large ToughCoil

10 Coil special features
Blank - No coil
00 - No special feature

11 Special features
00 - None
(Only required if valve has Special features, omitted if "00".)

Dimensions

mm (inch)

Torque cartridge in aluminum housing 81-95 Nm (60-70 ft. lbs)

Torque cartridge in steel housing 102-115 Nm (75-85 ft. lbs)

Note: When solenoid vale is ordered as Cartridge only, coil nut is included.

Cartridge only

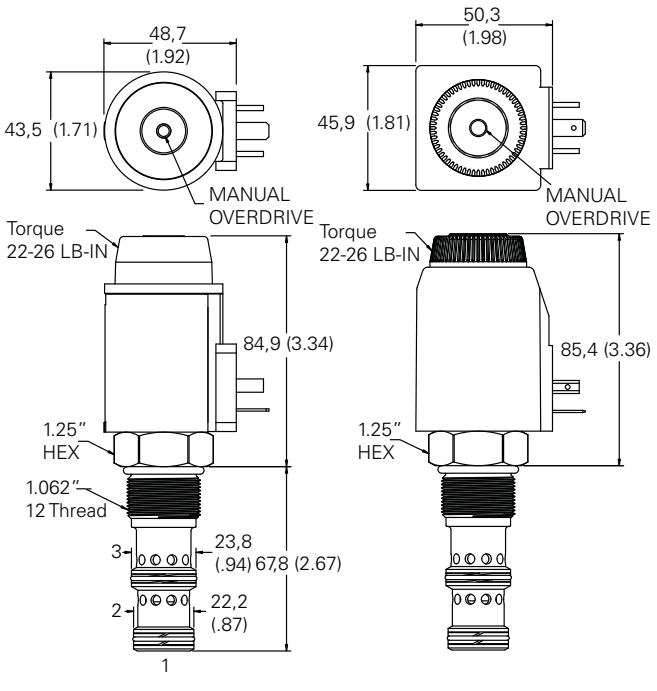

SV2A-12-3 SV2B-12-3

Installation drawing (Steel)

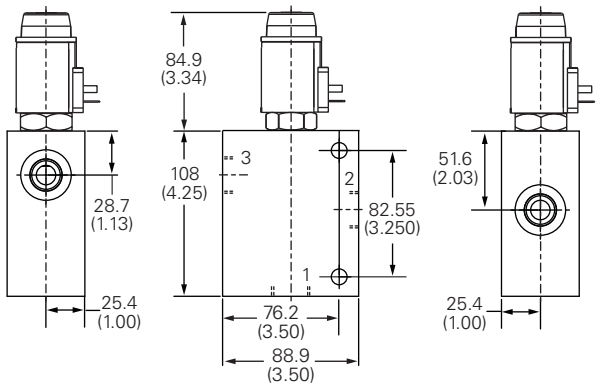

⚠ Warning
Maintain 2.5-3 Nm (1.8-2.2 ft. lbs) maximum torque on valve tube nut. Over tightening may cause valve failure.

⚠ Warning
Aluminum housings can be used for pressures up to 210 bar (3000 psi). Steel housings **must** be used for operating pressures **above** 210 bar (3000 psi).

Where measurements are critical request certified drawings. We reserve the right to change specifications without notice.

SV4M-12-3P - Solenoid valve

3-way, 2-position spool type solenoid valve
Up to 42 L/min (11 USgpm) • 210 bar (3000 psi)

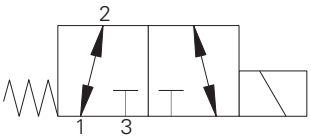

Operation

In the de-energized position this valve allows flow from port 2 to 1 while port 3 is blocked.

In the energized position flow is allowed from port 2 to port 3 while port 1 is blocked.

Features

Hardened, ground and honed working parts to limit leakage. IP69K Large ToughCoil compatibility. Continuously rated. Compact design with low Pressure drop. Rated pressure on all ports.

Sectional view

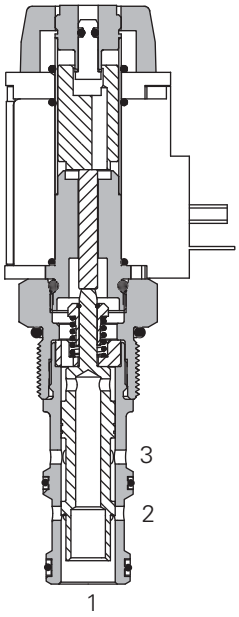

Performance data

Ratings and specifications

Performance data is typical with fluid at 21,8 cST (105 SUS) and 49°C (120°F)	
Typical application pressure	210 bar (3000 psi)
Cartridge fatigue pressure (infinite life)	210 bar (3000 psi)
Rated flow	42 L/min (11 USgpm)
Internal leakage	300 cm^3/min (21.5 in^3/min) max @ 210 bar (3000 psi)
Temperature range	-40° to 120°C (-40° to 248°F)
Coil duty	Continuous from 85% to 110% of nominal voltage
Cavity	C-12-3
Fluids	All general purpose hydraulic fluids such as: MIL-H-5606, SAE 10, SAE 20, etc.
Filtration	Cleanliness code 18/16/13
Housing material (standard)	Aluminum
Weight including coil	0,86 kg (1.9 lbs)
Seal kit	9900171-000 (Buna-N), 9900172-000 (Viton®)

Viton is a registered trademark of E.I. DuPont

Description

This is a 3-way 2-position, direct acting, spool type solenoid valve. This valve can be used in applications requiring separate pressure and tank lines, such as a single acting cylinder or any other application where a three way two position solenoid valve is needed.

Pressure drop

Cartridge only

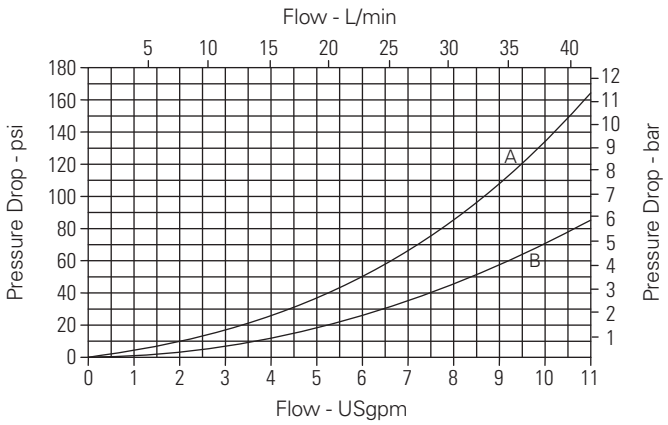

A - Port 3 to port 2 energized
B - Port 2 to port 1 de-energized

Where measurements are critical request certified drawings. We reserve the right to change specifications without notice.

SV4M-12-3P - Solenoid valve

3-way, 2-position spool type solenoid valve
Up to 42 L/min (11 USgpm) • 210 bar (3000 psi)

Model code

SV4	*	– 12	*	– 3P	– ****	– ****	*	*	**	– **
1	2	3	4	5	6	7	8	9	10	11

1 Function
SV4 - Solenoid valve

2 Max flow
M - 42 L/min (11 USgpm)

3 Size
12 - 12 size

4 Seal material
Blank - Buna-N
V - Viton®

5 Style
3P - 3 way, push type manual override

6 Port size

Code	Port size	Housing number
0	Cartridge only	
A6G	3/4" BSPP	02-161816
A12H	SAE 12	02-160646

7 Voltage rating
00 - No coil
12D - 12VDC
24D - 24VDC
12B - 12VDC/w diode*
24B - 24VDC/w diode*
*Optional arc suppression diode.

8 Connector types
Blank - No coil
W - Flying lead
N - Deutsch male, DT04-2P, integrated
For coil dimensions see section C.

9 Coil types
Blank - No coil
R - R series (30W) Large ToughCoil

10 Coil special features
Blank - No coil
00 - No special feature

11 Special features
00 - None
(Only required if valve has Special features, omitted if "00".)
SF - Soft shift

Dimensions

mm (inch)

Torque cartridge in aluminum housing 81-95 Nm (60-70 ft lbs)

Note: When solenoid valve is ordered as Cartridge only, coil nut is included.

Cartridge only

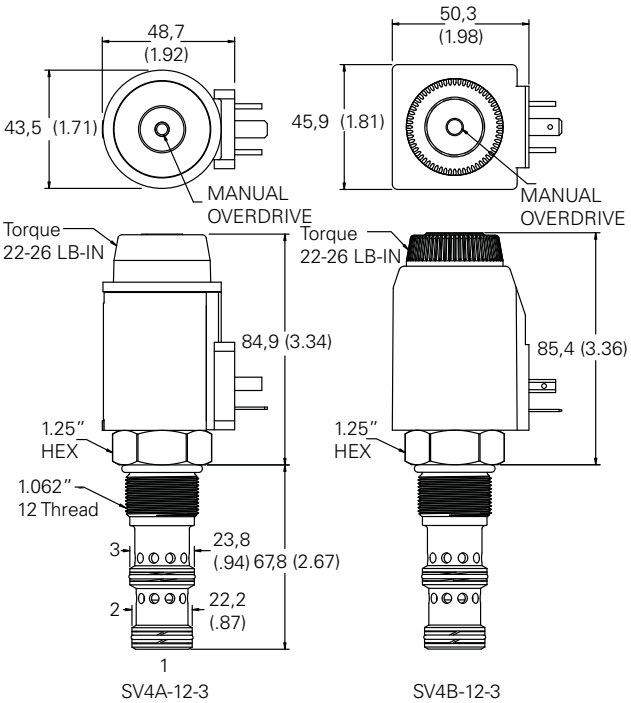

Installation drawing

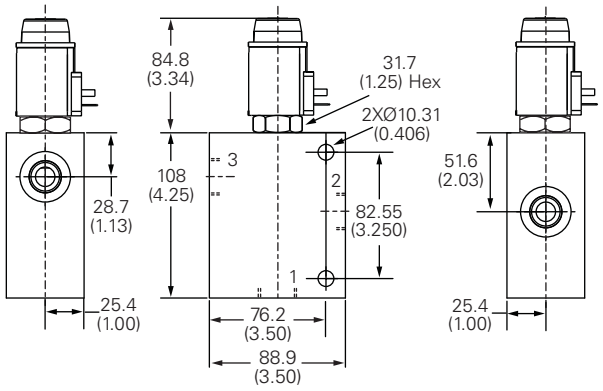

⚠ Warning
Maintain 2.5-3 Nm (1.8-2.2 ft lbs) maximum torque on valve tube nut. Over tightening may cause valve failure.

Where measurements are critical request certified drawings. We reserve the right to change specifications without notice.

SV14M-12-3 - Solenoid valve

3-way, 2-position spool type solenoid valve
Up to 42 L/min (11 USgpm) • 350 bar (5000 psi)

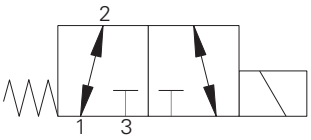

Operation

In the de-energized position this valve allows flow from port 1 to 3 while port 2 is blocked.

In the energized position flow is allowed from port 2 to port 1 while port 3 is blocked.

Features

Hardened, ground and honed working parts to limit leakage. IP69K Large ToughCoil compatibility. Continuously rated. Compact design with low Pressure drop. Rated pressure on all ports. Working pressure 350 bar.

Sectional view

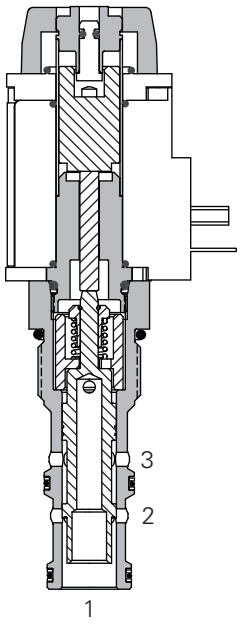

Performance data

Ratings and specifications

Performance data is typical with fluid at 21,8 cSt (105 SUS) and 49°C (120°F)	
Typical application pressure (all ports except port 1)	350 bar (5000 psi)
Typical application pressure at port 1	210 bar (3000 psi)
Cartridge fatigue pressure (infinite life)	350 bar (5000 psi)
Rated flow	42 L/min (11 USgpm)
Internal leakage	350 cc/min (21.5 in3/min) @ 210 bar (3000 psi)
Temperature range	-40° to 120°C (-40° to 248°F)
Coil duty	Continuos from 85% to 110% of nominal voltage
Cavity	C-12-3
Fluids	All general purpose hydraulic fluids such as MIL-H-5606, SAE 10, SAE 20, etc.
Filtration Cleanliness code	18/16/13
Standard housing materials	Steel
Weight including coil	0.86 kg (1.9 lbs)
Seal kit	9900171-000 Buna-N), 9900172-000 (Viton®)

Viton is a registered trademark of E.I. DuPont

Description

This is a 3-way 2-position, high pressure, direct acting, spool type solenoid valve. This valve can be used in applications requiring separate pressure and tank lines, such as a single acting cylinder or any other application where a three way two position solenoid valve is needed.

Pressure drop

Cartridge only

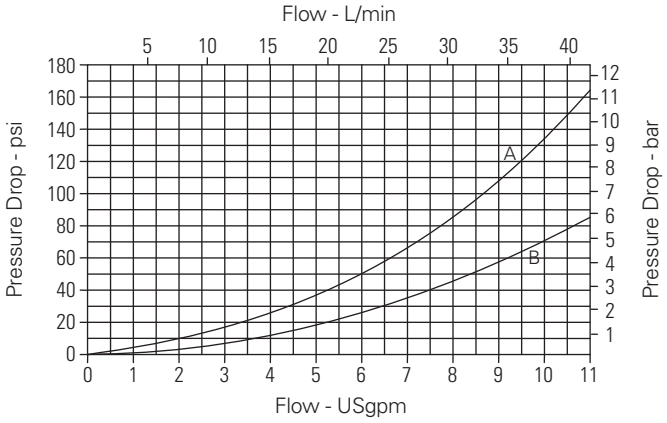

A - Port 3 to port 2 energized
B - Port 2 to port 1 de-energized

Where measurements are critical request certified drawings. We reserve the right to change specifications without notice.

SV14A/B-12-3 - Solenoid valve

3-way, 2-position spool type solenoid valve
Up to 42 L/min (11 USgpm) • 350 bar (5000 psi)

Model code

SV14	*	– 12	*	– 3P	– ****	– ****	*	*	**	– **
1	2	3	4	5	6	7	8	9	10	11

1 Function
SV14 - Solenoid valve

2 Max flow
M - 42 L/min (11 USgpm)

3 Size
12 - 12 size

4 Seal material
Blank - Buna-N
V - Viton®

5 Style
3P - 3 way, push type manual override

6 Port size
0 - Cartridge only

Code	Port size	Housing number	
		Aluminium	Steel
A6G	3/4" BSPP	02-161816	
A12H	SAE 12	02-160646	
S4G	1/2" BSPP		02-169815
S6G	3/4" BSPP		02-169814
S10T	SAE 10		02-161070
S12T	SAE 12		02-169816

7 Voltage rating
00 - No coil
12D - 12VDC
24D - 24VDC
12B - 12VDC/w diode*
24B - 24VDC/w diode*
*Optional arc suppression diode.

8 Connector types
Blank - No coil
W - Flying lead (DC only)
N - Deutsch male, DT04-2P, integrated
For coil dimensions see section C.

9 Coil types
Blank - No coil
R - R series (30W) Large ToughCoil

10 Coil special features
Blank - No coil
00 - No special feature

11 Special features
00 - None
(Only required if valve has Special features, omitted if "00".)

Dimensions

mm (inch)

Torque cartridge in aluminum housing 81-95 Nm (60-70 ft. lbs)

Torque cartridge in steel housing 102-115 Nm (75-85 ft. lbs)

Note: When solenoid vale is ordered as Cartridge only, coil nut is included.

Cartridge only

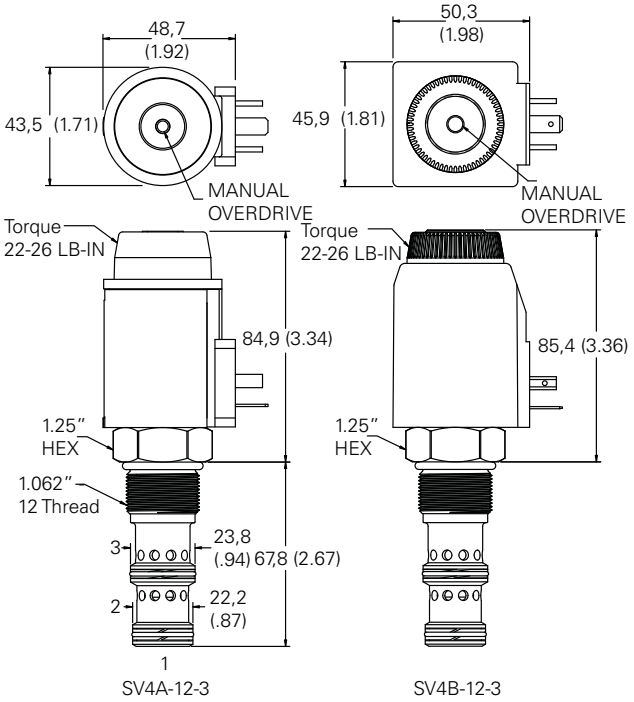

Installation drawing (Steel)

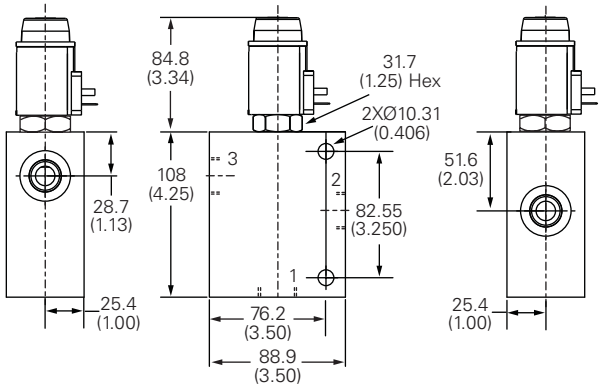

⚠ Warning
Maintain 2.5-3 Nm (1.8-2.2 ft. lbs) maximum torque on valve tube nut. Over tightening may cause valve failure.

⚠ Warning
Aluminum housings can be used for pressures up to 210 bar (3000 psi). Steel housings **must** be used for operating pressures **above** 210 bar (3000 psi).

Where measurements are critical request certified drawings. We reserve the right to change specifications without notice.

SV1-8-4/4M - Solenoid valve

4-way, 2-position, spool type solenoid valve
Up to 11 L/min (3 USgpm) • 210 bar (3000 psi)

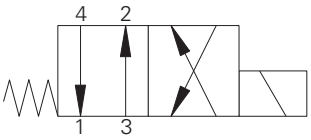

Operation

In the de-energized position this valve allows flow from port 4 to port 1 and from port 3 to port 2.

In the energized position flow is allowed from port 3 to port 4 and from port 2 to port 1.

Features

Hardened, ground and honed working parts to limit leakage. IP69K Tough coil compatibility. Continuously rated. Compact design with low Pressure drop. Rated pressure on all ports.

Sectional view

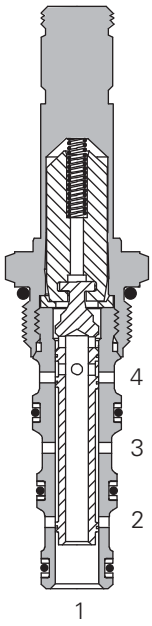

Performance data

Ratings and specifications

Performance data is typical with fluid at 21,8 cST (105 SUS) and 49°C (120°F)	
Typical application pressure (all ports)	210 bar (3000 psi)
Cartridge fatigue pressure (infinite life)	210 bar (3000 psi)
Rated flow	11 L/min (3 USgpm)
Internal leakage (per land)	82 cm^3/min (5 in^3/min) max @ 210 bar (3000 psi)
Temperature range	-40° to 120°C (-40° to 248°F)
Coil duty	Continuous from 85% to 110% of nominal voltage
Cavity	C-8-4
Fluids	All general purpose hydraulic fluids such as: MIL-H-5606, SAE 10, SAE 20, etc.
Filtration	Cleanliness code 18/16/13
Housing material (standard)	Aluminum
Weight including coil	0,31 kg (0.69 lbs)
Seal kit	02-160757 (Buna-N), 02-160758 (Viton®)

Viton is a registered trademark of E.I. DuPont

Description

This is a 4-way 2-position, direct acting, spool type solenoid valve. This valve can be used in applications where the motion of a double acting cylinder or a motor needs to be reversed.

Pressure drop

Cartridge only

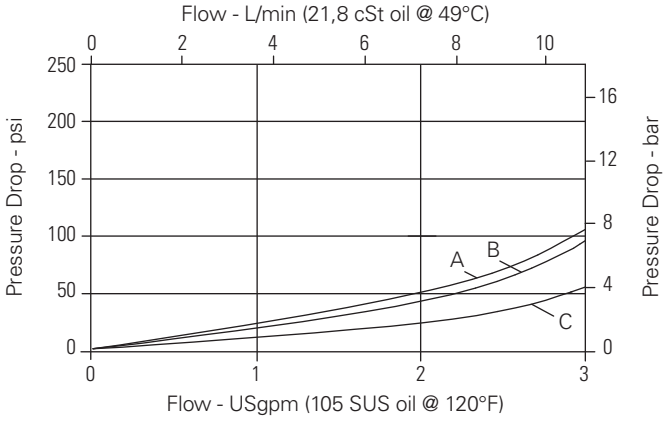

A - Port 3 to port 4 or port 3 to port 2
B - Port 4 to port 1
C - Port 2 to port 1

Where measurements are critical request certified drawings. We reserve the right to change specifications without notice.

SV1-8-4/4M - Solenoid valve

4-way, 2-position, spool type solenoid valve
Up to 11 L/min (3 USgpm) • 210 bar (3000 psi)

Model code

SV1	–	8	(V)	–	4	(M)	–	(A)	**	–	****	*	S	–	00
1		2	3		4	5		6	7		8	9	10		11

1 Function
SV1 - Solenoid valve

2 Size
8 - 8 size

3 Seal material
Blank - Buna-N
V - Viton®

4 Style
4 - 4-way, 2 position

5 Manual override option
Blank - No manual override
M - Manual override

For valve dimensions with Manual override option installed, see page A-980.

6 Valve housing material
Omit for Cartridge only
A - Aluminum

7 Port size

Code	Port size	Housing number
0	Cartridge only	
2G	1/4" BSPP	02-160747
3G	3/8" BSPP	02-160748
4T	SAE 4	02-160749
6T	SAE 6	02-160750

See section J for housing details.

8 Voltage rating
00 - No coil
12D - 12VDC
24D - 24VDC
36D - 36VDC
24A - 24VAC
115A - 115VAC
230A - 230VAC
12B - 12VDC/w diode*
24B - 24VDC/w diode*

*Optional arc suppression diode.

9 Connector types
Blank - No coil
G - ISO 4400 DIN 43650
Q - Spade terminals
W - Flying lead
N - Deutsch (DC only)
Y - Amp JR (DC only)
D - Metripack 150 male (DC only)
J - Metripack 280 male (DC only)

10 Coil series
S - 8 series, 20 W

For coil part numbers and dimensions see section C.

11 Special features
00 - None

(Only required if valve has Special features omitted if "00".)

Dimensions
mm (inch)

Cartridge only

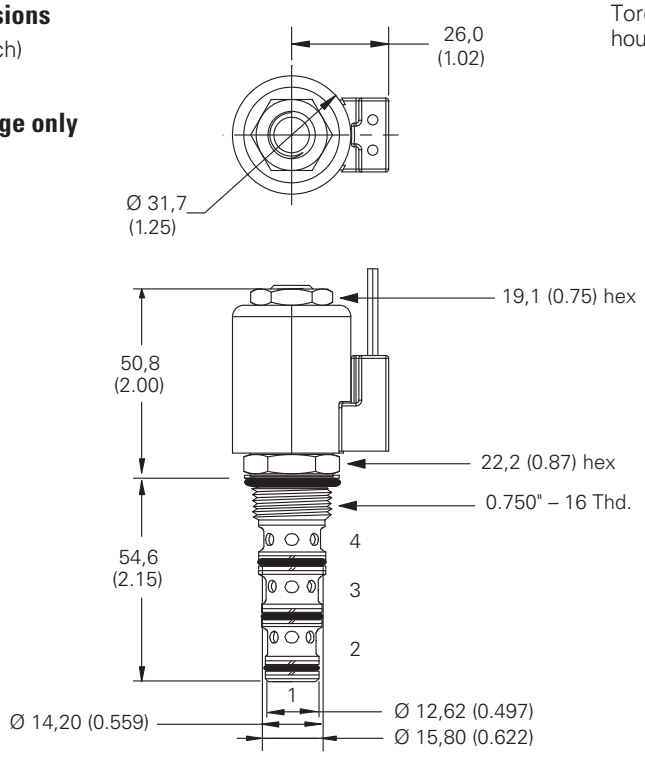

Torque cartridge in steel housing 34-41 Nm (25-30 ft lbs)

Note: When solenoid valve is ordered as Cartridge only, nut is included.

Installation drawing

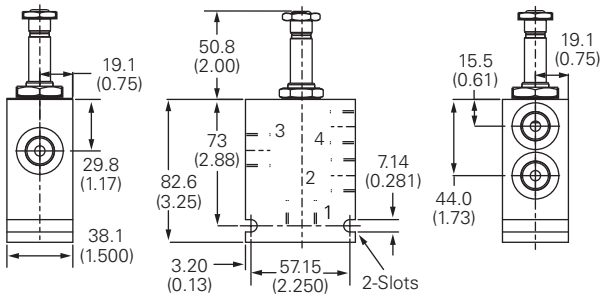

⚠ Warning
Maintain 5-8 Nm (4-6 ft lbs) maximum torque on valve tube nut.

Over tightening may cause valve failure.

Where measurements are critical request certified drawings. We reserve the right to change specifications without notice.

SV11-8-4/4M - Solenoid valve

4-way, 2-position spool type solenoid valve
Up to 11 L/min (3 USgpm) • 350 bar (5000 psi)

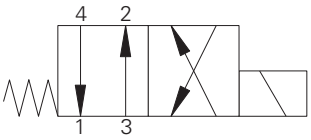

Operation

In the de-energized position this valve allows flow from port 4 to port 1 and from port 3 to port 2.

In the energized position flow is allowed from port 3 to port 4 and from port 2 to port 1

Features

Hardened, ground and honed working parts to limit leakage. IP69K Tough coil compatibility. Continuously rated. Compact design with low Pressure drop. Rated pressure on all ports. Working pressure 350 bar.

Sectional view

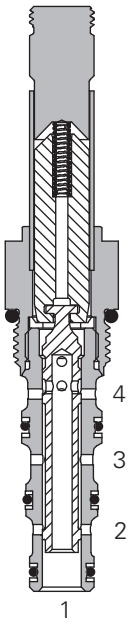

Performance data

Ratings and specifications

Performance data is typical with fluid at 21,8 cST (105 SUS) and 49°C (120°F)	
Typical application pressure (all ports)	350 bar (5000 psi)
Cartridge fatigue pressure (infinite life)	310 bar (4500 psi)
Rated flow	11 L/min (3 USgpm)
Internal leakage (per land)	82 cm^3/min (5 in^3/min) max @ 350 bar (5000 psi)
Temperature range	-40° to 100°C (-40° to 212°F)
Coil duty	Continuous from 85% to 110% of nominal voltage
Cavity	C-8-4
Fluids	All general purpose hydraulic fluids such as: MIL-H-5606, SAE 10, SAE 20, etc.
Filtration	Cleanliness code 18/16/13
Housing material (standard)	Steel
Weight including coil	0,14 kg (0.30 lbs)
Seal kit	02-160757 (Buna-N), 02-160758 (Viton®)

Viton is a registered trademark of E.I. DuPont

Description

This is a 4-way 2-position, high pressure, direct acting, spool type solenoid valve. This valve can be used in applications where the motion of a double acting cylinder or a motor needs to be reversed.

Pressure drop

Cartridge only

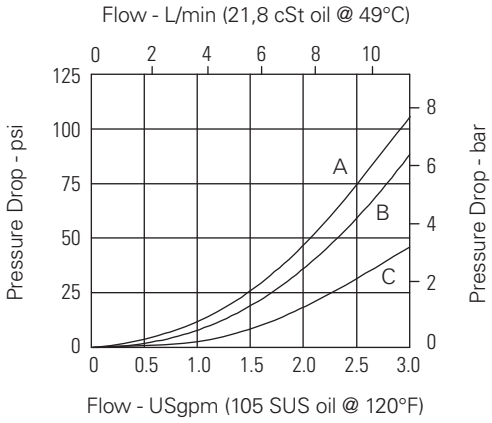

Pressure drop vs. Flow

A - Port 3 to port 4 or port 3 to port 2
B - Port 4 to 1
C - Port 2 to 1

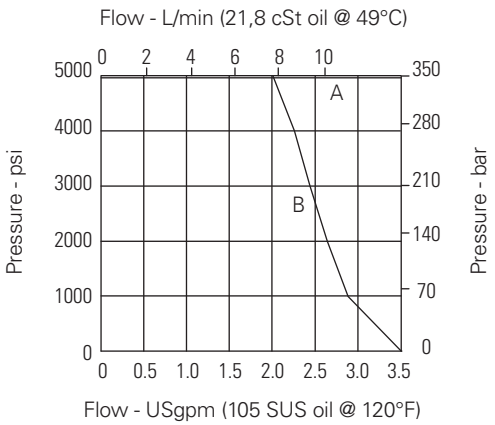

Operating Limits

A - Port 2 to port 1, 4 to 1, and 3 to 2
B - Port 3 to port 4

Where measurements are critical request certified drawings. We reserve the right to change specifications without notice.

SV11-8-4/4M - Solenoid valve

4-way, 2-position spool type solenoid valve
Up to 11 L/min (3 USgpm) • 350 bar (5000 psi)

Model code

SV11 –	8	(V) –	4	(M) – (S)	** –	****	*	P	– 00
1	2	3	4	5	6	7	8	9	10	11

1 Function
SV11 - Solenoid valve

2 Size
8 - 8 size

3 Seal material
Blank - Buna-N
V - Viton®

4 Style
4 - 4-way, 2 position

5 Manual override option
Blank - No manual override
M - Manual override
For valve dimensions with Manual override option installed, see page A-980.

6 Valve housing material
Blank - Cartridge only
A - Aluminum

7 Port size

Code	Port size	Housing number
0	Cartridge only	
2G	1/4" BSPP	02-160751
3G	3/8" BSPP	02-160752
4T	SAE 4	02-160753
6T	SAE 6	02-160754

See section J for housing details.

8 Voltage rating
00 - No coil
12D - 12VDC
24D - 24VDC
36D - 36VDC
24A - 24VAC
115A - 115VAC
230A - 230VAC
12B - 12VDC/w diode*
24B - 24VDC/w diode*
*Optional arc suppression diode.

9 Connector types
Blank - No coil
G - ISO 4400 DIN 43650
Q - Spade terminals
W - Flying lead
N - Deutsch (DC only)
Y - Amp JR (DC only)
D - Metripack 150 male (DC only)
J - Metripack 280 male (DC only)
For coil part numbers and dimensions see section C.

10 Coil series
P - 8 series, 23 W
For coil part numbers and dimensions see section C.

11 Special features
00 - None
(Only required if valve has Special features omitted if "00".)

Dimensions
mm (inch)

Cartridge only

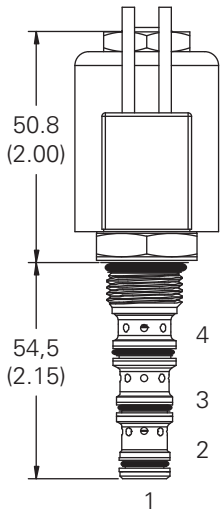

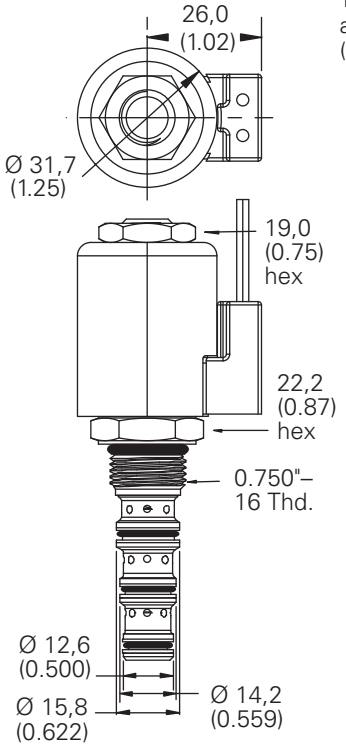

Torque cartridge in steel or aluminum housing 34-41 Nm (25-30 ft lbs)

Installation drawing

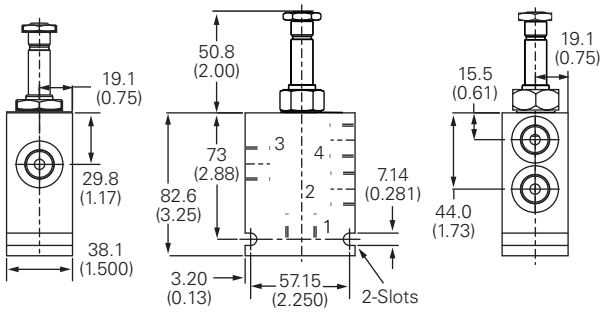

Note: When solenoid valve is ordered as Cartridge only, nut is included.

⚠ Warning
Maintain 5-8 Nm (4-6 ft lbs) maximum torque on valve tube nut. Over tightening may cause valve failure.

Where measurements are critical request certified drawings. We reserve the right to change specifications without notice.

SV2-8-4/4M - Solenoid valve

4-way, 2-position spool type solenoid valve
Up to 13 L/min (4 USgpm) • 210 bar (3000 psi)

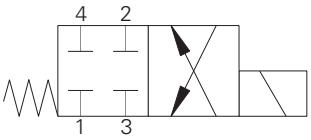

Operation

In the de-energized position all ports are blocked.

In the energized position flow is allowed from port 3 to port 4 and from port 2 to port 1

Features

Hardened, ground and honed working parts to limit leakage. IP69K Tough coil compatibility. Continuously rated. Compact design with low Pressure drop. Rated pressure on all ports..

Sectional view

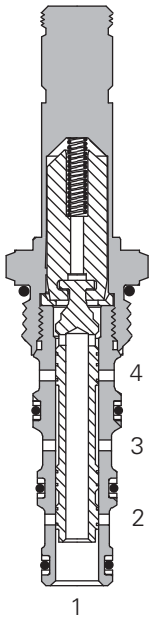

Performance data

Ratings and specifications

Performance data is typical with fluid at 21,8 cST (105 SUS) and 49°C (120°F)	
Typical application pressure (all ports)	210 bar (3000 psi)
Cartridge fatigue pressure (infinite life)	210 bar (3000 psi)
Rated flow	13 L/min (4 USgpm)
Internal leakage	82 cm^3/min (5 in^3/min) max @ 350 bar (5000 psi)
Temperature range	-40° to 100°C (-40° to 212°F)
Coil duty	Continuous from 85% to 110% of nominal voltage
Response times (100% rated voltage and flow)	Energize: 21 ms De-Energize: 42 ms
Cavity	C-8-4
Fluids	All general purpose hydraulic fluids such as: MIL-H-5606, SAE 10, SAE 20, etc.
Filtration	Cleanliness code 18/**16/13**
Housing material (standard)	Aluminum
Weight including coil	0,30 kg (0.66 lbs)
Seal kit	02-160757 (Buna-N), 02-160758 (Viton®)

Viton is a registered trademark of E.I. DuPont

Description

This is a 4-way 2-position, direct acting, spool type solenoid valve. This valve can be used in applications where a double acting actuator needs to be isolated.

Pressure drop

Cartridge only

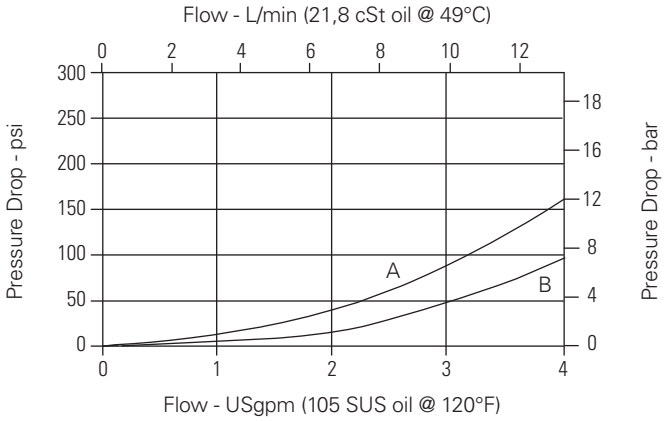

A - Port 3 to port 4
B - Port 2 to 1

Where measurements are critical request certified drawings. We reserve the right to change specifications without notice.

SV2-8-4/4M - Solenoid valve

4-way, 2-position spool type solenoid valve
Up to 13 L/min (4 USgpm) • 210 bar (3000 psi)

Model code

SV2	–	8	(V)	–	4	(M)	–	(A)	**	–	****	*	S	–	00
1		2	3		4	5		6	7		8	9	10		11

1 Function
SV2 - Solenoid valve

2 Size
8 - 8 size

3 Seal material
Blank - Buna-N
V - Viton®

4 Style
4 - 4-way, 2 position

5 Manual override option
Blank - No manual override
M - Manual override

For valve dimensions with Manual override option installed, see page A-980.

6 Valve housing material
Omit for Cartridge only
A - Aluminum

7 Port size

Code	Port size	Housing number
0	Cartridge only	
2G	1/4" BSPP	02-160747
3G	3/8" BSPP	02-160748
4T	SAE 4	02-160749
6T	SAE 6	02-160750

See section J for housing details.

8 Voltage rating
00 - No coil
12D - 12VDC
24D - 24VDC
36D - 36VDC
24A - 24VAC
115A - 115VAC
230A - 230VAC
12B - 12VDC/w diode*
24B - 24VDC/w diode*

*Optional arc suppression diode.

9 Connector types
Blank - No coil
G - ISO 4400 DIN 43650
Q - Spade terminals
W - Flying lead
N - Deutsch (DC only)
Y - Amp JR (DC only)
D - Metripack 150 male (DC only)
J - Metripack 280 male (DC only)

For coil part numbers and dimensions see section C.

10 Coil series
S - 8 series, 20 W

For coil part numbers and dimensions see section C.

11 Special features
00 - None

(Only required if valve has Special features omitted if "00".)

Dimensions
mm (inch)

Torque cartridge in steel or aluminum housing 34-41 Nm (25-30 ft lbs)

Note: When solenoid valve is ordered as Cartridge only, nut is included.

Cartridge only

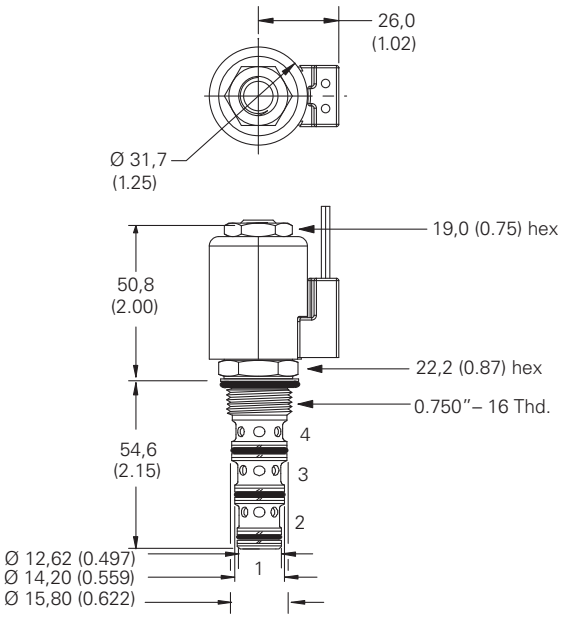

Installation drawing

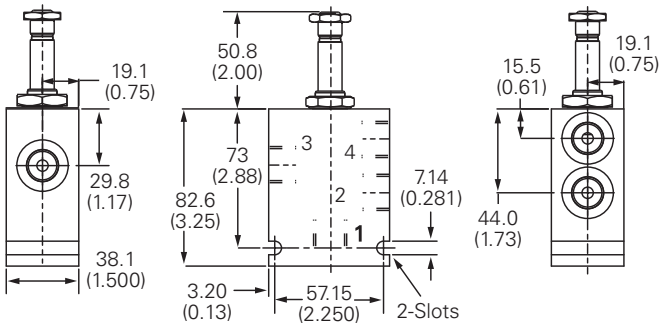

⚠ Warning
Maintain 5-8 Nm (4-6 ft lbs) maximum torque on valve tube nut. Over tightening may cause valve failure.

Where measurements are critical request certified drawings. We reserve the right to change specifications without notice.

SV12-8-4/4M - Solenoid valve

4-way, 2-position spool type solenoid valve
Up to 11 L/min (3 USgpm) • 350 bar (5000 psi)

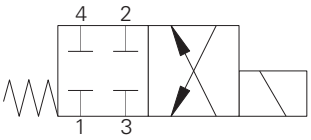

Operation

In the de-energized position all ports are blocked.

In the energized position flow is allowed from port 3 to port 4 and from port 2 to port 1.

Features

Hardened, ground and honed working parts to limit leakage. IP69K Tough coil compatibility. Continuously rated. Compact design with low Pressure drop. Rated pressure on all ports. Working pressure 350 bar.

Sectional view

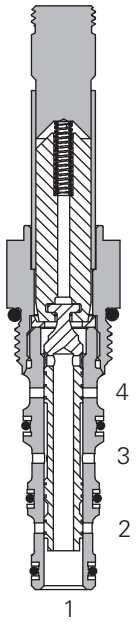

Performance data

Ratings and specifications

Performance data is typical with fluid at 21,8 cST (105 SUS) and 49°C (120°F)	
Typical application pressure (all ports)	350 bar (5000 psi)
Cartridge fatigue pressure (infinite life)	310 bar (4500 psi)
Rated flow	11 L/min (3 USgpm)
Internal leakage, port 2 to port 1	82 cm^3/min (5 in^3/min) max @ 350 bar (5000 psi)
Temperature range	-40° to 100°C (-40° to 212°F)
Coil duty	Continuous from 85% to 110% of nominal voltage
Cavity	C-8-4
Fluids	All general purpose hydraulic fluids such as: MIL-H-5606, SAE 10, SAE 20, etc.
Filtration	Cleanliness code 18/**16/13**
Housing material (standard)	Steel
Weight - Cartridge only	0,14 kg (0.30 lbs)
Seal kit	02-160757 (Buna-N), 02-160758 (Viton®)

Viton is a registered trademark of E.I. DuPont

Description

This is a 4-way 2-position, high pressure, direct acting, spool type solenoid valve. This valve can be used in applications where a double acting actuator needs to be isolated.

Pressure drop

Cartridge only

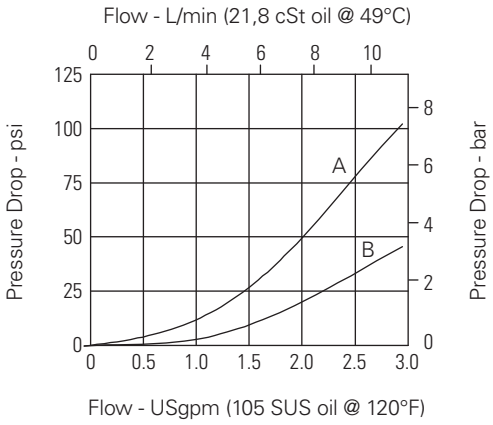

Pressure drop vs. Flow

A - Port 3 to port 4
B - Port 2 to 1

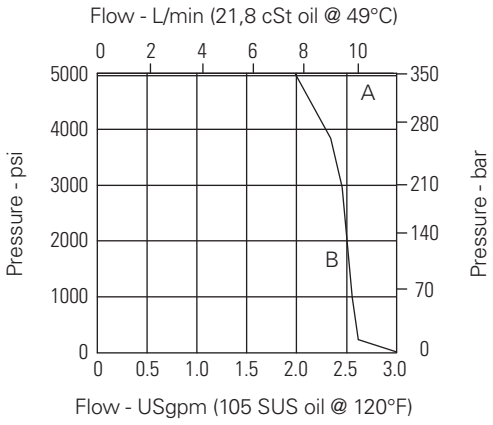

Operating Limits

A - Port 2 to port 1
B - Port 3 to port 4

Where measurements are critical request certified drawings. We reserve the right to change specifications without notice.

SV12-8-4/4M - Solenoid valve

4-way, 2-position spool type solenoid valve
Up to 11 L/min (3 USgpm) • 350 bar (5000 psi)

Model code

SV12	8	(V)	–	4	(M)	–	(S)	**	–	****	*	P	–	00
1	2	3		4	5		6	7		8	9	10		11

1 Function
SV12 - Solenoid valve

2 Size
8 - 8 size

3 Seal material
Blank - Buna-N
V - Viton®

4 Style
4 - 4-way, 2 position

5 Manual override option
Blank - No manual override
M - Manual override

For valve dimensions with Manual override option installed, see page A-980.

6 Valve housing material
Blank - Omit for Cartridge only
A - Aluminum

7 Port size

Code	Port size	Housing number
0	Cartridge only	
2G	1/4" BSPP	02-160751
3G	3/8" BSPP	02-160752
4T	SAE 4	02-160753
6T	SAE 6	02-160754

See section J for housing details.

8 Voltage rating
00 - No coil
12D - 12VDC
24D - 24VDC
36D - 36VDC
24A - 24VAC
115A - 115VAC
230A - 230VAC
12B - 12VDC/w diode*
24B - 24VDC/w diode*

*Optional arc suppression diode.

9 Connector types
Blank - No coil
G - ISO 4400 DIN 43650
Q - Spade terminals
W - Flying lead
N - Deutsch (DC only)
Y - Amp JR (DC only)
D - Metripack 150 male (DC only)
J - Metripack 280 male (DC only)

For coil part numbers and dimensions see section C.

10 Coil series
P - 8 series, 23 W

For coil part numbers and dimensions see section C.

11 Special features
00 - None

(Only required if valve has Special features omitted if "00".)

Dimensions
mm (inch)

Torque cartridge in steel or aluminum housing 34-41 Nm (25-30 ft lbs)

Note: When solenoid valve is ordered as Cartridge only, nut is included.

Cartridge only

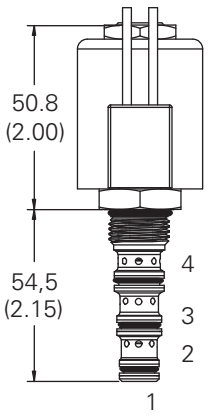

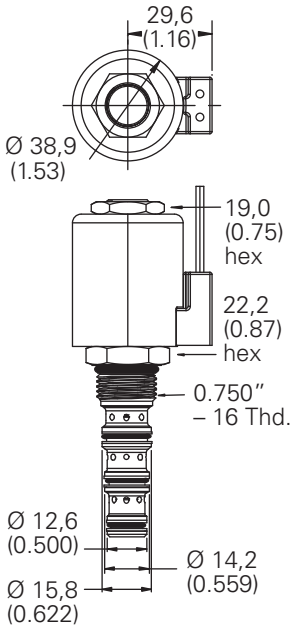

Installation drawing

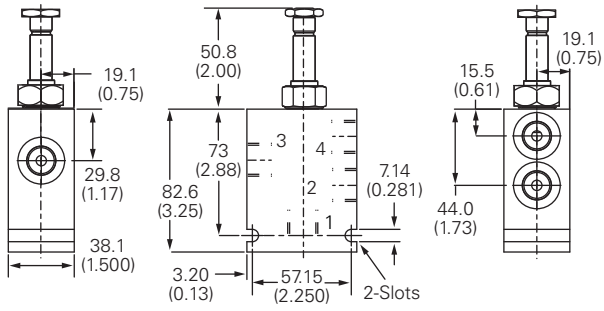

⚠ Warning
Maintain 5-8 Nm (4-6 ft lbs) maximum torque on valve tube nut. Over tightening may cause valve failure.

Where measurements are critical request certified drawings. We reserve the right to change specifications without notice.

SV1-10-4/4M/4R - Solenoid valve

4-way, 2-position spool type solenoid valve
Up to 23 L/min (6 USgpm) • 210 bar (3000 psi)

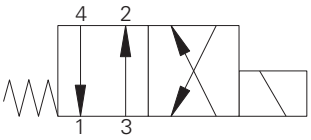

Operation

In the de-energized position this valve allows flow from port 4 to port 1 and from port 3 to port 2.

In the energized position flow is allowed from port 3 to port 4 and from port 2 to port 1

Features

Hardened, ground and honed working parts to limit leakage. IP69K Tough coil compatibility. Continuously rated. Compact design with low Pressure drop. Rated pressure on all ports.

Sectional view

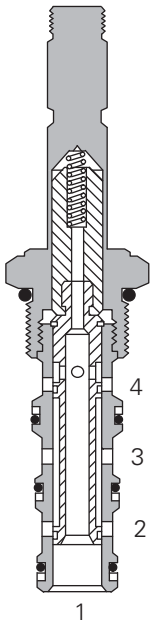

Performance data

Ratings and specifications

Performance data is typical with fluid at 21,8 cST (105 SUS) and 49°C (120°F)	
Typical application pressure (all ports)	210 bar (3000 psi)
Cartridge fatigue pressure (infinite life)	210 bar (3000 psi)
Rated flow	23 L/min (6 USgpm)
Internal leakage	164 cm^3/min (10 in^3/min) max @ 210 bar (3000 psi)
Temperature range	-40° to 120°C (-40° to 248°F)
Coil duty	Continuous from 85% to 110% of nominal voltage
Cavity	C-10-4
Fluids	All general purpose hydraulic fluids such as: MIL-H-5606, SAE 10, SAE 20, etc.
Filtration	Cleanliness code 18/**16/13**
Housing material (standard)	Aluminum
Weight including coil	0,44 kg (0.96 lbs)
Seal kit	889625 (Buna-N), 566080 (Viton®)

Viton is a registered trademark of E.I. DuPont

Description

This is a 4-way 2-position, direct acting, spool type solenoid valve. This valve can be used in applications where the motion of a double acting cylinder or a motor needs to be reversed.

Pressure drop

Cartridge only

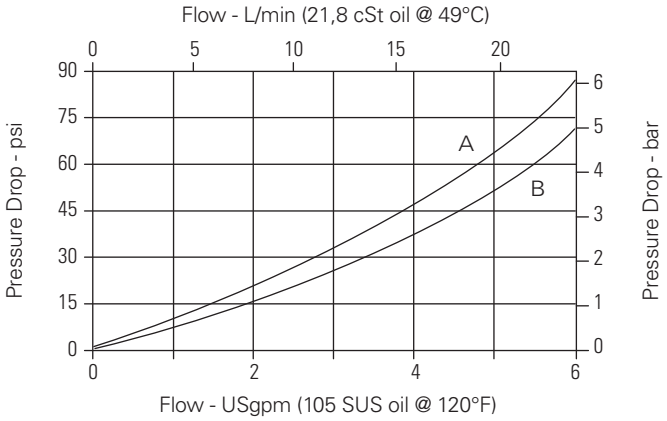

A - Port 4 to port 1
B - Port 3 to port 2

Where measurements are critical request certified drawings. We reserve the right to change specifications without notice.

SV1-10-4/4M/4R - Solenoid valve

4-way, 2-position spool type solenoid valve
Up to 23 L/min (6 USgpm) • 210 bar (3000 psi)

Model code

SV1 – 10 (V) – 4 (*) – ** – ** * – 00**

1 2 3 4 5 6 7 8 9

1 Function
SV1 - Solenoid valve

2 Size
10 - 10 size

3 Seal material
Blank - Buna-N
V - Viton®

4 Style
4 - 4-way, 2 position

5 Manual override option
Blank - No manual override
M - Knob type
R - Cable type

For valve dimensions with Manual override option installed, see page A-980.

6 Port size

Code	Port size	Housing number
0	Cartridge only	
3B	3/8" BSPP	02-179705*
6T	SAE 6	566161*
2G	1/4" BSPP	876709
3G	3/8" BSPP	876715
6H	SAE 6	876708
8H	SAE 8	876713

*Light duty housing.
See section J for housing details.

7 Voltage rating
00 - No coil
12D - 12VDC
24D - 24VDC
36D - 36VDC
24A - 24VAC
115A - 115VAC
230A - 230VAC
12B - 12VDC/w diode*
24B - 24VDC/w diode*

*Optional arc suppression diode.

8 Connector types
Blank - No coil
G - ISO 4400 DIN 43650
Q - Spade terminals
W - Flying lead
N - Deutsch (DC only)
Y - Amp JR (DC only)
D - Metripack 150 male (DC only)
J - Metripack 280 male (DC only)

For coil part numbers and dimensions see section C.

9 Special features
00 - None

(Only required if valve has Special features omitted if "00".)

Dimensions
mm (inch)

Torque cartridge in aluminum housing 47-54 Nm (33-46 ft lbs)

Note: When solenoid valve is ordered as Cartridge only, nut is included.

Note: Use J series 23W coils with this solenoid valve.

Cartridge only

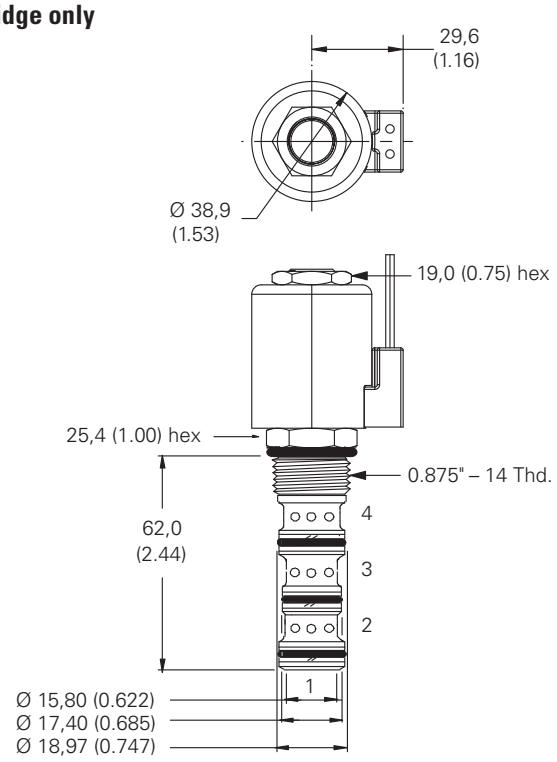

Installation drawing

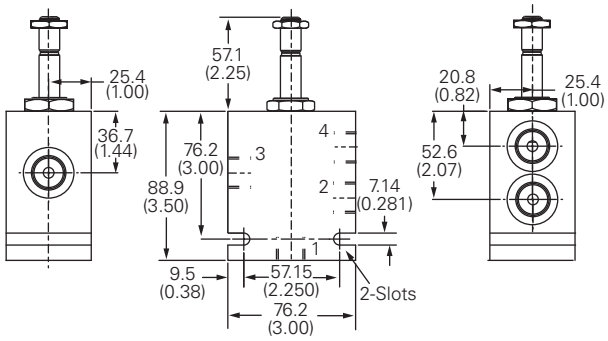

⚠ Warning
Maintain 5-8 Nm (4-6 ft lbs) maximum torque on valve tube nut. Over tightening may cause valve failure.

Where measurements are critical request certified drawings. We reserve the right to change specifications without notice.

S542 - Solenoid valve

4-way, 2-position spool type solenoid valve
Up to 35 L/min (9 USgpm) • 210 bar (3000 psi)

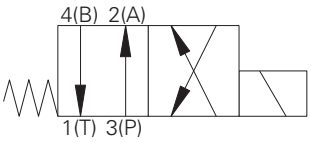

Operation

In the de-energized position this valve allows flow from port 4 to port 1 and from port 3 to port 2. In the energized position flow is allowed from port 3 to port 4 and from port 2 to port 1.

Features

- High flow capacity with reduced space requirements.
- No dynamic seals.
- Standard valve bodies and common cavities.
- One-piece encapsulated coil with minimal amperage draw.
- Oil immersed armature solenoid.
- Various coil terminals and voltages.
- Coil interchangeability with valves of same series.
- Manual override, seal variations and other options available.
- Sealed coil arrangement to protect stem from corrosion.
- Reversible coil without affecting performance.

Sectional view

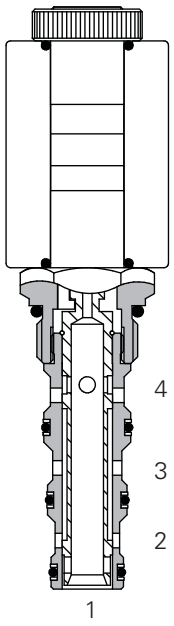

Performance data

Ratings and specifications

Figures based on Viscosity 32 cST (150 SSU)	
Max working pressure	210 bar (3000 psi)
Rated flow	See performance graphs
Nominal flow at ΔP = 5 bar (70 psi)	20 L/min (5 USgpm)
Internal leakage	Less than 120 ml/min past each land 210 bar differential at 32 cSt
Temperature range	-30° to +120°C (-22° to +248°F)
Cavity	C-10-4 (See Section M)
Electrical data	See coil data sheet
Torque cartridge into cavity	30 Nm (22 lbs ft)
Mounting position	Unrestricted
Fluids	Most general purpose hydraulic fluids such as MIL-H-5606, SAE 10, SAE 20 etc.
Seal material	Standard nitrile with PTFE back up rings
Filtration	BS5540/4 Class 18/13 (25 micron or better)
Nominal viscosity range	15 to 250 cSt
Standard housing materials	Aluminium alloy
Coil weight	0.3 kg (.6 lbs)
Cartridge weight	0.205 kg (.45 lbs)
Seal kit	SK1031 (Nitrile) SK1031V (Viton®)
Coil part number	C16-*-*/19
Coil voltage available	12, 24 VDC, 110, 220, VAC*

Viton is a registered trademark of E.I. DuPont
*AC coils must be used with a rectifying connector

Description

This is a 4-way 2-position, direct acting, spool type solenoid valve. This valve can be used in applications where the motion of a double acting cylinder or a motor needs to be reversed.

Pressure drop

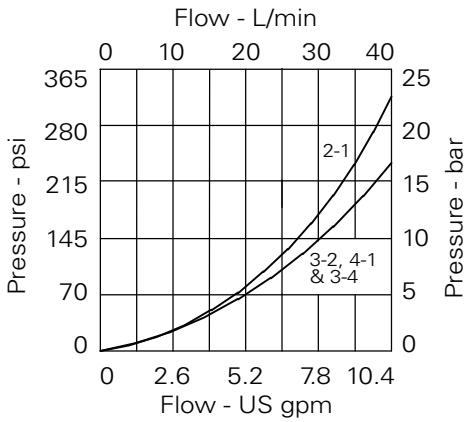

Performance

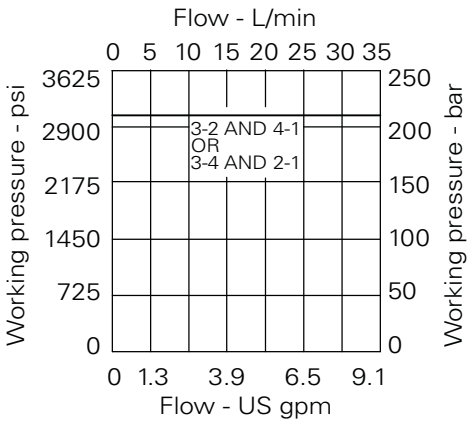

Where measurements are critical request certified drawings. We reserve the right to change specifications without notice.

S542 - Solenoid valve

4-way, 2-position spool type solenoid valve
Up to 35 L/min (9 USgpm) • 210 bar (3000 psi)

Model code

S542 N * – H 24 – 3W

1 2 3 4 5 6

1 Function
S542

2 Seals
N - Nitrile
V - Viton

3 Manual Override
2 - Screw
(Consult factory for availability).
See page A-960

4 Coil Termination
H - DIN43650
F - Flying leads
DM - Deutsch moulded
Other terminations available on request

5 Voltage
12 - 12 VDC
24 - 24 VDC
110 - 110 VAC
220 - 220 VAC

6 Port sizes

Code	Port size	Housing number - Body only
		Aluminium
3W	3/8" BSP	B19240
4W	1/2" BSP	B19228
8T	1/2" SAE	B19229

Dimensions

mm (inch)

Cartridge only

Basic Code
S542

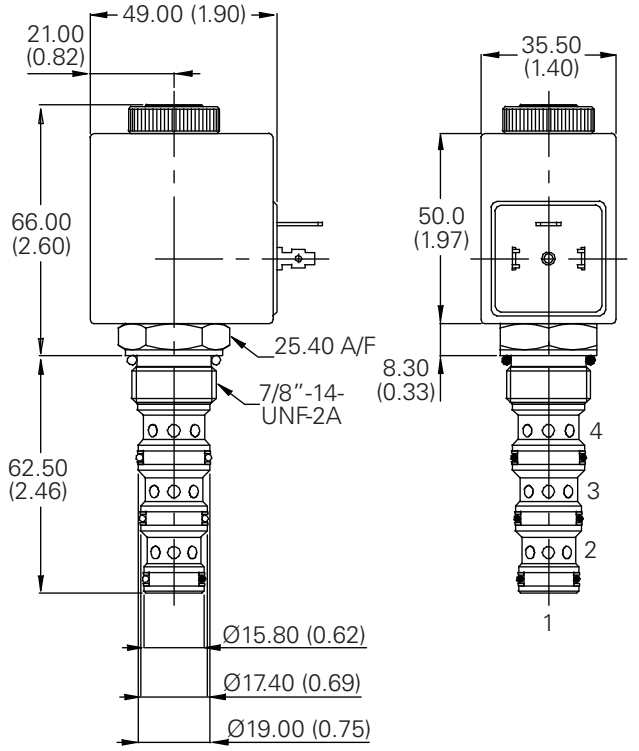

Installation drawing

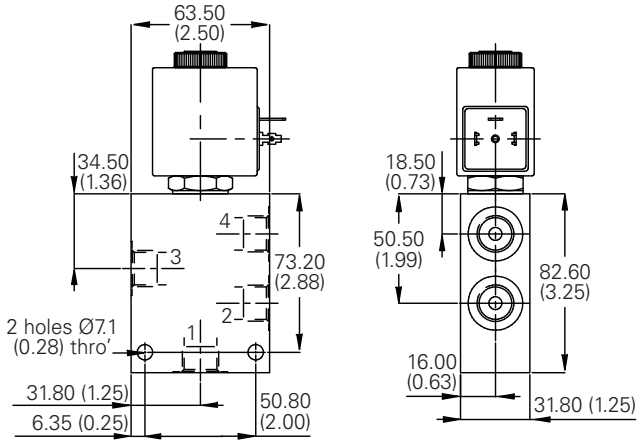

Where measurements are critical request certified drawings. We reserve the right to change specifications without notice.

SV11-10-4/4M - Solenoid valve

4-way, 2-position, spool type solenoid valve
23 L/min (6 USgpm) • 350 bar (5000 psi)

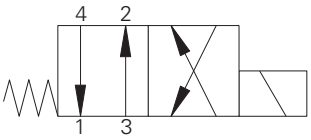

Operation

In the de-energized position this valve allows flow from port 4 to port 1 and from port 3 to port 2.

In the energized position flow is allowed from port 3 to port 4 and from port 2 to port 1.

Features

Hardened, ground and honed working parts to limit leakage. IP69K Tough coil compatibility. Continuously rated. Compact design with low Pressure drop. Rated pressure on all ports. Working pressure 350 bar.

Sectional view

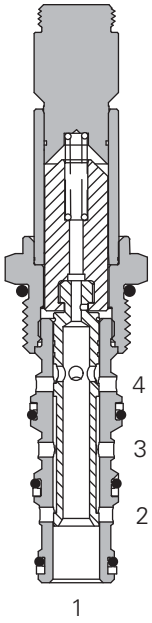

Performance data

Ratings and specifications

Performance data is typical with fluid at 21,8 cSt (105 SUS) and 49° C (120° F)	
Typical application pressure (all ports)	350 bar (5000 psi)
Cartridge fatigue pressure (infinite life)	310 bar (4500 psi)
Rated flow	23 L/min (6 USgpm)
Internal leakage, port 2 to port 1	82 cm^3/min. (5 in^3/min) max @ 350 bar (5000 psi)
Temperature range	-40° to 100°C (-40° to 212°F)
Coil duty	Continuous from 85% to 110% of nominal voltage
Cavity	C-10-4
Fluids	All general purpose hydraulic fluids such as: MIL-H-5606, SAE 10, SAE 20 etc.
Filtration	Cleanliness code 18/**16/13**
Housing material (standard)	Steel
Weight Cartridge only	0,21 kg (0.46 lbs)
Seal kit	889625 (Buna-N), 566080 (Viton®)

Viton is a registered trademark of E.I. DuPont

Description

This is a 4-way 2-position, high pressure, direct acting, spool type solenoid valve. This valve can be used in applications where the motion of a double acting cylinder or a motor needs to be reversed.

Pressure drop

Cartridge only

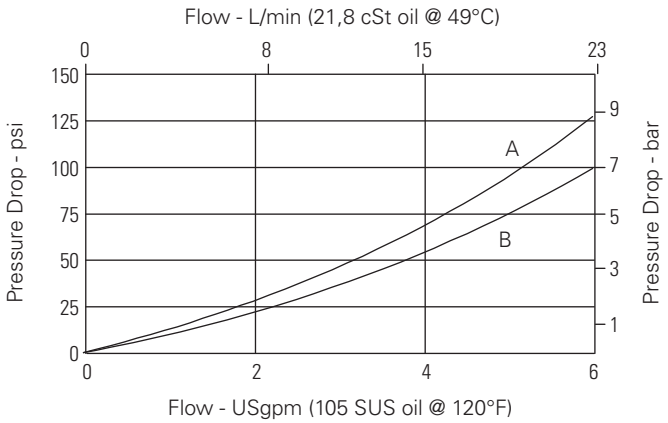

A - Port 3 to port 2
B - Port 4 to port 1

Where measurements are critical request certified drawings. We reserve the right to change specifications without notice.

SV11-10-4/4M - Solenoid valve

4-way, 2-position, spool type solenoid valve
23 L/min (6 USgpm) • 350 bar (5000 psi)

A

Model code

SV11	–	10	(V)	–	4	(M)	–	(S)	**	–	****	*	H	–	00
1		2	3		4	5		6	7		8	9	10		11

1 Function
SV11 - Solenoid valve

2 Size
10 - 10 size

3 Seal material
Blank - Buna-N
V - Viton®

4 Style
4 - 4-way, 2-position

5 Manual override option
Blank - No manual override
M - Manual override

For valve dimensions with Manual override option installed see page A-980.

6 Valve housing material
Blank - Omit for Cartridge only
S - Steel

7 Port size

Code	Port size	Housing number
0	Cartridge only	
2G	1/4" BSPP	02-175139
3G	3/8" BSPP	02-175140
6T	SAE 6	02-175137
8T	SAE 8	02-175138

See section J for housing details.

8 Voltage rating
00 - No coil
12D - 12VDC
24D - 24VDC
36D - 36VDC
24A - 24VAC
115A - 115VAC
230A - 230VAC
12B - 12VDC/w diode*
24B - 24VDC/w diode*

*Optional arc suppression diode.

9 Coil types
Blank - No coil
G - ISO 4400 DIN 43650
Q - Spade terminals
W - Flying lead
N - Deutsch (DC only)
Y - Amp JR (DC only)
D - Metripack 150 male (DC only)
J - Metripack 280 male (DC only)

For coil part numbers and dimensions see section C.

10 Coil series
H - 10 series, 29W

For coil part numbers and dimensions see section C.

11 Special features
00 - None

(Only required if valve has Special features omitted if "00".)

Dimensions
mm (inch)

Cartridge only

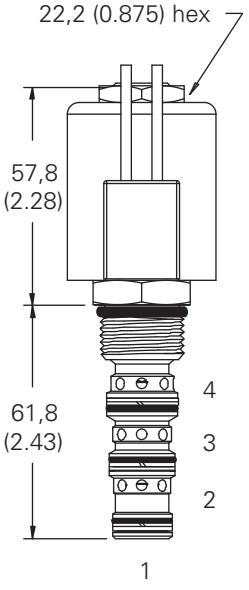

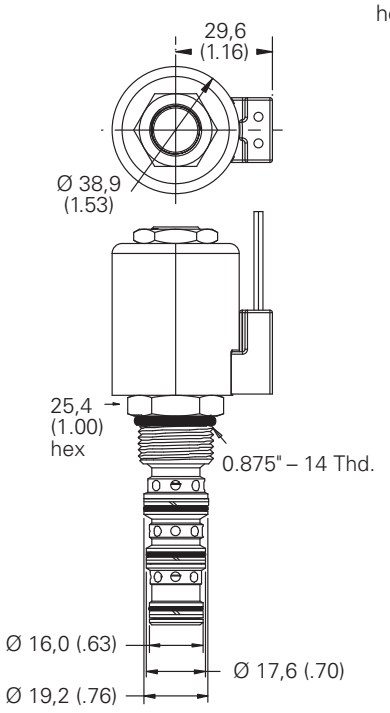

Torque cartridge in steel housing 68-75 Nm (50-55 ft lbs)

Note: When solenoid valve is ordered as Cartridge only, coil nut is included.

Installation drawing

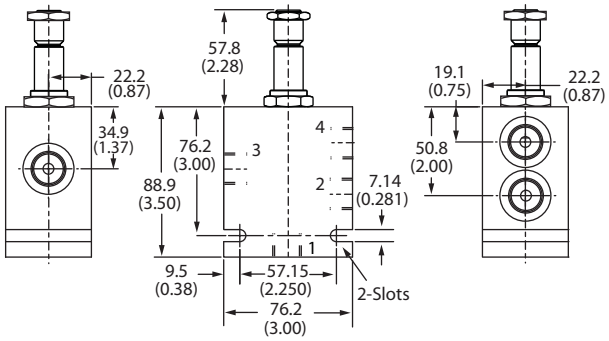

⚠ Warning
Maintain 5-8 Nm (4-6 ft lbs) maximum torque on valve tube nut. Over tightening may cause valve failure.

Where measurements are critical request certified drawings. We reserve the right to change specifications without notice.

S541 - Solenoid valve

4-way, 2-position spool type solenoid valve
Up to 30 L/min (8 USgpm) • 210 bar (3000 psi)

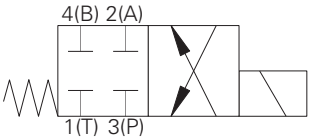

Operation

In the de-energized position all ports are blocked. In the energized position flow is allowed from port 3 to port 4 and from port 2 to port 1.

Features

- High flow capacity with reduced space requirements.
- No dynamic seals.
- Standard valve bodies and common cavities.
- One-piece encapsulated coil with minimal amperage draw.
- Oil immersed armature solenoid.
- Various coil terminals and voltages.
- Coil interchangeability with valves of same series.
- Manual override, seal variations and other options available.
- Sealed coil arrangement to protect stem from corrosion.
- Reversible coil without affecting performance.

Sectional view

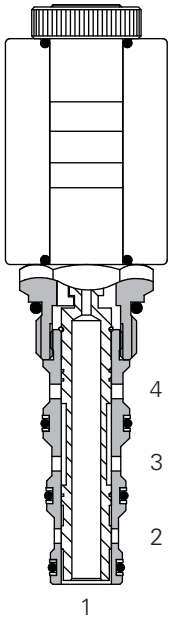

Performance data

Ratings and specifications

Performance data is typical with Viscosity 32 cST (150 SSU)	
Max working pressure	210 bar (3000 psi)
Rated flow	See performance graphs
Nominal flow at ΔP = 5 bar (70 psi)	20 L/min (5 USgpm)
Internal leakage	Less than 120 ml/min 210 bar differential
Temperature range	-30° to +120°C (-22° to +248°F)
Cavity	C-10-4 (See Section M)
Electrical data	See coil data sheet
Torque cartridge into cavity	30 Nm (22 lbs ft)
Mounting position	Unrestricted
Fluids	All general purpose hydraulics fluids such as MIL-H-5606, SAE 10, SAE 20 etc
Seal material	Nitrile with PTFE back up rings
Filtration	BS5540/4 Class 18/13 (25 micron or better)
Nominal viscosity range	15 to 250 cSt
Standard housing materials	Aluminium alloy
Coil weight	0.3 kg (0.6 lbs)
Cartridge weight	0.13 kg (0.3 lbs)
Seal kit	SK1031 (Nitrile) SK1031V (Viton)
Coil part number	C16-*-*/19
Coil voltage available	12, 24 VDC, 110, 220, VAC*

Viton is a registered trademark of E.I. DuPont
*AC coils must be used with a rectifying connector

Description

This is a 4-way 2-position, high pressure, direct acting, spool type solenoid valve. This valve can be used in applications where a double acting actuator needs to be isolated.

Pressure drop

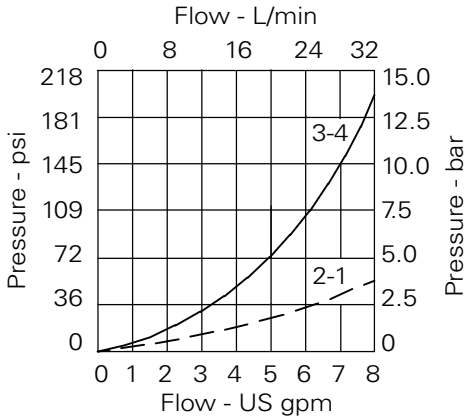

Performance

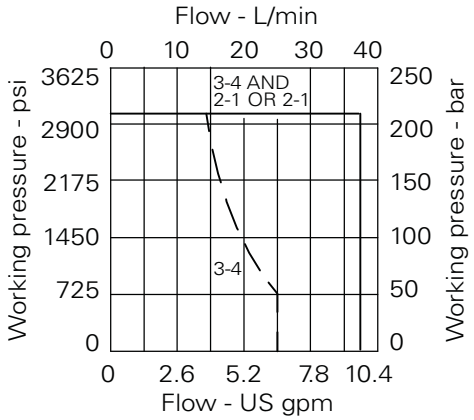

Where measurements are critical request certified drawings. We reserve the right to change specifications without notice.

S541 - Solenoid valve

4-way, 2-position spool type solenoid valve
Up to 30 L/min (8 USgpm) • 210 bar (3000 psi)

Model code

S541 N * – H 24 – 3W

1 2 3 4 5 6

1 Function
S541

2 Seal material
N - Nitrile
V - Viton

3 Manual Override
2 - Screw
(Consult factory for availability).
See page A-960.

4 Coil Termination
H - DIN43650
F - Flying leads
DM - Deutsch moulded
Other terminations available on request

5 Voltage
12 - 12 VDC
24 - 24 VDC
110 - 110 VAC
220 - 220 VAC

6 Port size

Code	Port size	Housing number - Body only
		Aluminium
3W	3/8" BSP	B19240
4W	1/2" BSP	B19228
8T	1/2" SAE	B19229

Dimensions
mm (inch)

Cartridge only
Basic Code
S541

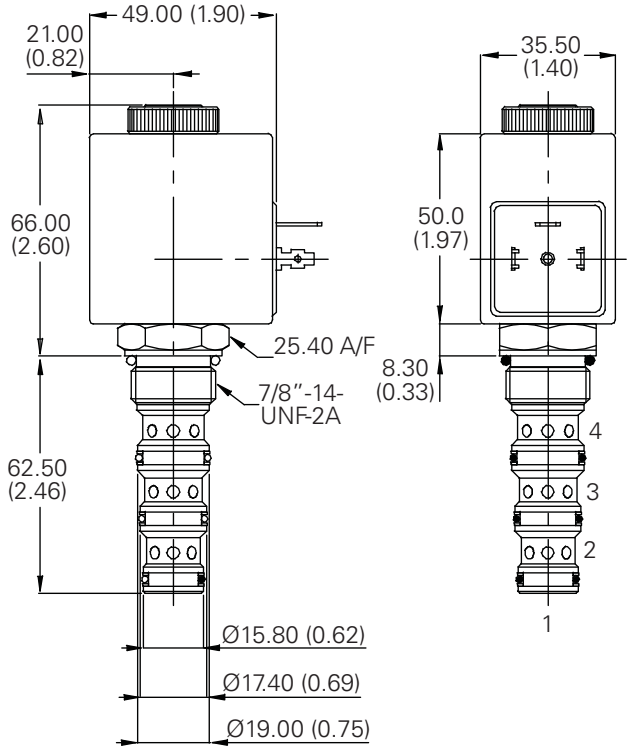

Installation drawing

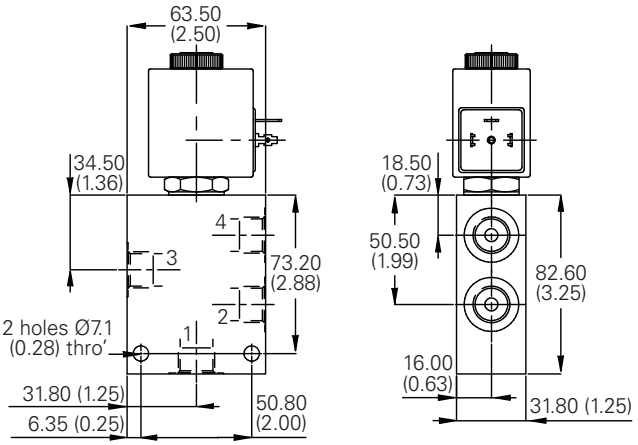

Where measurements are critical request certified drawings. We reserve the right to change specifications without notice.

SV2-10-4/4M/4R - Solenoid valve

4-way, 2-position, spool type solenoid valve
23 L/min (6 USgpm) • 210 bar (3000 psi)

A

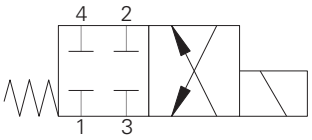

Operation

In the de-energized position all ports are blocked.

In the energized position flow is allowed from port 3 to port 4 and from port 2 to port 1.

Features

Hardened, ground and honed working parts to limit leakage. IP69K Tough coil compatibility. Continuously rated. Compact design with low Pressure drop. Rated pressure on all ports.

Sectional view

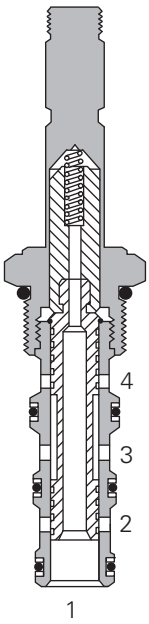

Performance data

Ratings and specifications

Performance data is typical with fluid at 21,8 cST (105 SUS) and 49°C (120°F)	
Typical application pressure (all ports)	210 bar (3000 psi)
Cartridge fatigue pressure (infinite life)	210 bar (3000 psi)
Rated flow	23 L/min (6 USgpm)
Internal leakage	164 cm^3/min (10 in^3/min) max @ 210 bar (3000 psi)
Temperature range	-40° to 120°C (-40° to 248°F)
Coil duty	Continuous from 85% to 110% of nominal voltage
Cavity	C-10-4
Fluids	All general purpose hydraulic fluids such as: MIL-H-5606, SAE 10, SAE 20 etc.
Filtration	Cleanliness code 18/**16/13**
Housing material (standard)	Aluminum
Weight including coil	0,44 kg (0.96 lbs)
Seal kit	889625 (Buna-N), 566080 (Viton®)

Viton is a registered trademark of E.I. DuPont

Description

This is a 4-way 2-position, direct acting, spool type solenoid valve. This valve can be used in applications where a double acting actuator needs to be isolated.

Pressure drop

Cartridge only

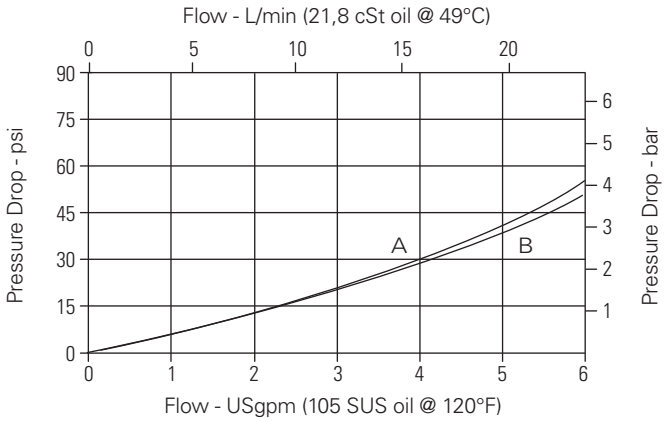

A - Port 3 to port 4
B - Port 1 to port 2

Where measurements are critical request certified drawings. We reserve the right to change specifications without notice.

SV2-10-4/4M/4R - Solenoid valve

4-way, 2-position, spool type solenoid valve
23 L/min (6 USgpm) • 210 bar (3000 psi)

Model code

SV2	–	10	(V)	–	4	(*)	–	**	–	****	*	–	00
1		2	3		4	5		6		7	8		9

1 Function
SV2 - Solenoid valve

2 Size
10 - 10 size

3 Seal material
Blank - Buna-N
V - Viton®

4 Style
4 - 4-way, 2-position

5 Manual override option
Blank - No manual override
M - Knob type
R - Cable type

For valve dimensions with Manual override option installed see page A-980.

6 Port size

Code	Port size	Housing number
0	Cartridge only	
3B	3/8" BSPP	02-179705*
6T	SAE 6	566161*
2G	1/4" BSPP	876709
3G	3/8" BSPP	876715
6H	SAE 6	876708
8H	SAE 8	876713

*Light duty housing
See section J for housing details.

7 Voltage rating
00 - No coil
12D - 12VDC
24D - 24VDC
36D - 36VDC
24A - 24VAC
115A - 115VAC
230 - 230VAC
12B - 12VDC/w diode*
24B - 24VDC/w diode*

*Optional arc suppression diode.

8 Connector types
Blank - No coil
G - ISO 4400 DIN 43650
Q - Spade terminals
W - Flying lead
N - Deutsch (DC only)
Y - Amp JR (DC only)
D - Metripack 150 male (DC only)
J - Metripack 280 male (DC only)

For coil part numbers and dimensions see section C.

9 Special features
00 - None

(Only required if valve has Special features omitted if "00".)

Note: Use J series 23, W coils with this solenoid valve.

Dimensions
mm (inch)

Cartridge only

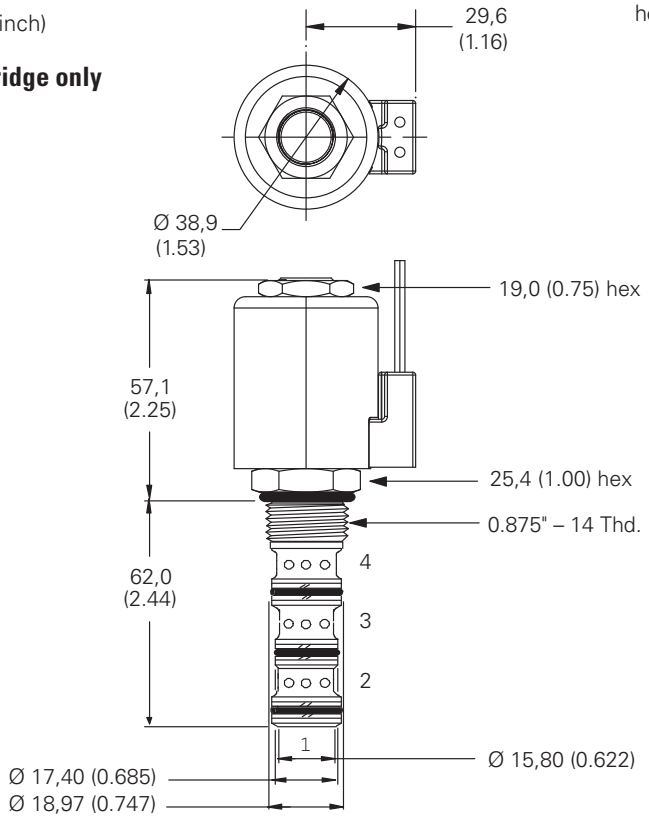

Torque cartridge in steel housing 47-54 Nm (35-40 ft lbs)

Note: When solenoid valve is ordered as Cartridge only, coil nut is included.

Installation drawing

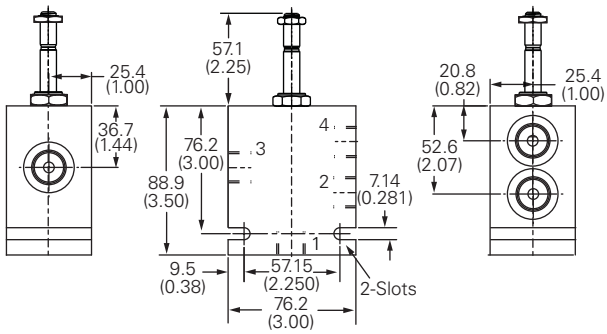

⚠ Warning
Maintain 5-8 Nm (4-6 ft lbs) maximum torque on valve tube nut.

Over tightening may cause valve failure.

Where measurements are critical request certified drawings. We reserve the right to change specifications without notice.

SV3-10-4/4M/4R - Solenoid valve

4-way, 2-position, spool type solenoid valve
23 L/min (6 USgpm) • 210 bar (3000 psi)

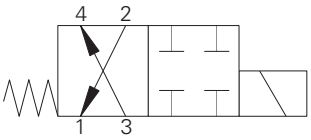

Operation

In the de-energized position flow is allowed from port 3 to port 4 and from port 2 to port 1.

In the energized position all ports are blocked.

Features

Hardened, ground and honed working parts to limit leakage. IP69K Tough coil compatibility. Continuously rated. Compact design with low Pressure drop. Rated pressure on all ports.

Sectional view

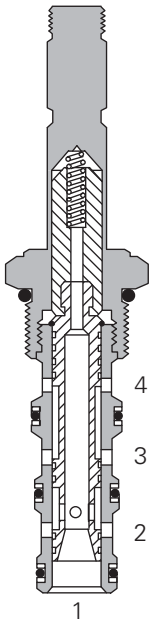

Performance data

Ratings and specifications

Performance data is typical with fluid at 21,8 cSt (105 SUS) and 49° C (120° F)	
Typical application pressure (all ports)	210 bar (3000 psi)
Cartridge fatigue pressure (infinite life)	210 bar (3000 psi)
Rated flow	23 L/min (6 USgpm)
Internal leakage	164 cm^3/min (10 in^3/min) max @ 210 bar (3000 psi)
Temperature range	-40° to 120°C (-40° to 248°F)
Coil duty	Continuous from 85% to 110% of nominal voltage
Cavity	C-10-4
Fluids	All general purpose hydraulic fluids such as: MIL-H-5606, SAE 10, SAE 20 etc.
Filtration	Cleanliness code 18/**16/13**
Housing material (standard)	Aluminum
Weight including coil	0,44 kg (0.96 lbs)
Seal kit	889625 (Buna-N), 566080 (Viton®)

Viton is a registered trademark of E.I. DuPont

Description

This is a 4-way 2-position, direct acting, spool type solenoid valve. This valve can be used in applications where a double acting actuator needs to be isolated.

Pressure drop

Cartridge only

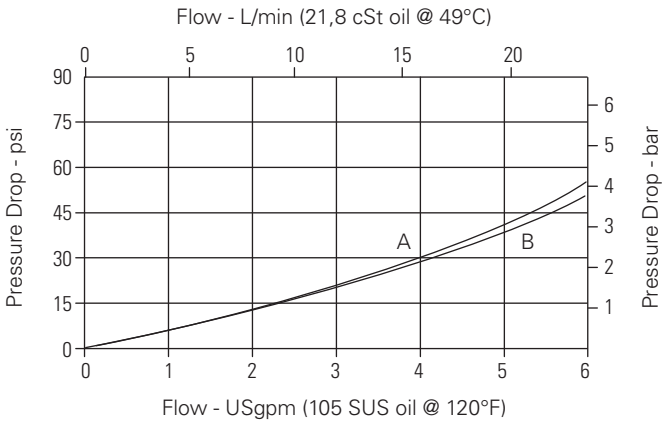

A - Port 3 to port 4
B - Port 1 to port 2

Where measurements are critical request certified drawings. We reserve the right to change specifications without notice.

SV3-10-4/4M/4R - Solenoid valve

4-way, 2-position, spool type solenoid valve
23 L/min (6 USgpm) • 210 bar (3000 psi)

Model code

SV3 – 10 (V) – 4 (*) – ** – ** * – 00**

1 2 3 4 5 6 7 8 9

1 Function
SV3 - Solenoid valve

2 Size
10 - 10 size

3 Seal material
Blank - Buna-N
V - Viton®

4 Style
4 - 4-way, 2-position

5 Manual override option
Blank - No manual override
M - Knob type
R - Cable type

For valve dimensions with Manual override option installed see page A-980.

6 Port size

Code	Port size	Housing number
0	Cartridge only	
3B	3/8" BSPP	02-179705*
6T	SAE 6	566161*
2G	1/4" BSPP	876709
3G	3/8" BSPP	876715
6H	SAE 6	876708
8H	SAE 8	876713

*Light duty housing
See section J for housing details.

7 Voltage rating
00 - No coil
12D - 12VDC
24D - 24VDC
36D - 36VDC
24A - 24VAC
115A - 115VAC
230A - 230VAC
12B - 12VDC/w diode*
24B - 24VDC/w diode*

*Optional arc suppression diode.

8 Connector types
Blank - No coil
G - ISO 4400 DIN 43650
Q - Spade terminals
W - Flying lead
N - Deutsch (DC only)
Y - Amp JR (DC only)
D - Metripack 150 male (DC only)
J - Metripack 280 male (DC only)

For coil part numbers and dimensions see section C.

9 Special features
00 - None

(Only required if valve has Special features omitted if "00".)

Note: Use J series 23, W coils with this solenoid valve.

Dimensions
mm (inch)

Torque cartridge in steel housing 47-54 Nm (35-40 ft lbs)

Note: When solenoid valve is ordered as Cartridge only, nut is included.

Cartridge only

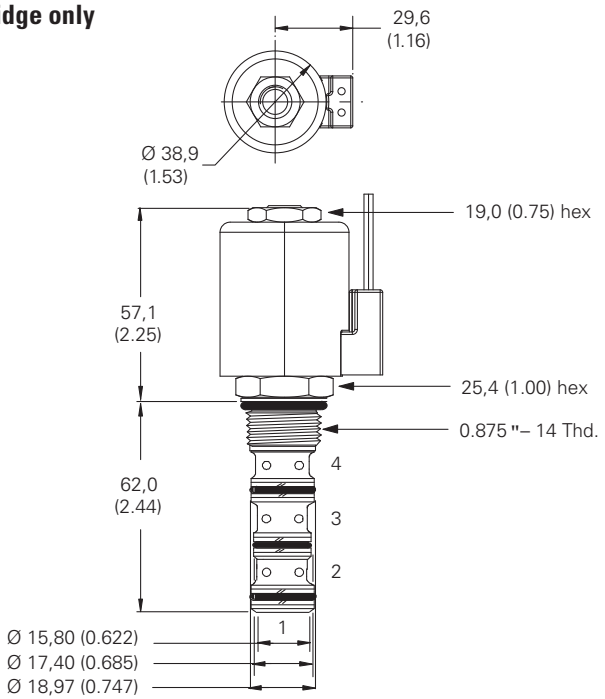

Installation drawing

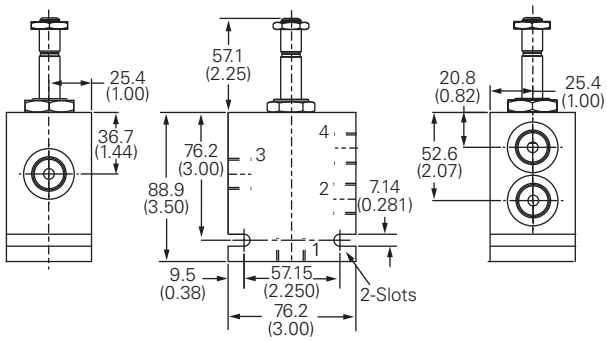

⚠ Warning

Maintain 5-8 Nm (4-6 ft lbs) maximum torque on valve tube nut.

Over tightening may cause valve failure.

Where measurements are critical request certified drawings. We reserve the right to change specifications without notice.

SV4-10-4/4M/4R - Solenoid valve

4-way, 2-position, spool type solenoid valve
23 L/min (6 USgpm) • 210 bar (3000 psi)

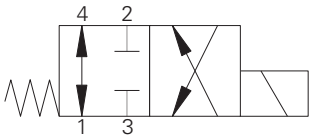

Operation

In the de-energized position flow is allowed from port 1 to port 4. Port 2 - port 3 is blocked.

In the energized position flow is allowed from port 1 to port 2, and from port 3 to port 4.

Features

Hardened, ground and honed working parts to limit leakage. IP69K Tough coil compatibility. Continuously rated. Compact design with low Pressure drop. Rated pressure on all ports.

Sectional view

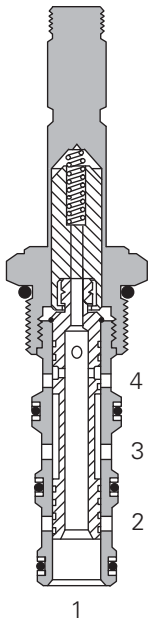

Performance data

Ratings and specifications

Performance data is typical with fluid at 21,8 cSt (105 SUS) and 49° C (120° F)	
Typical application pressure (all ports)	210 bar (3000 psi)
Cartridge fatigue pressure (infinite life)	210 bar (3000 psi)
Rated flow	23 L/min (6 USgpm)
Internal leakage	164 cm^3/min (10 in^3/min) max @ 210 bar (3000 psi)
Temperature range	-40° to 120°C (-40° to 248°F)
Coil duty	Continuous from 85% to 110% of nominal voltage
Cavity	C-10-4
Fluids	All general purpose hydraulic fluids such as: MIL-H-5606, SAE 10, SAE 20 etc.
Filtration	Cleanliness code 18/**16/13**
Housing material (standard)	Aluminum
Weight including coil	0,44 kg (0.96 lbs)
Seal kit	889625 (Buna-N), 566080 (Viton®)

Viton is a registered trademark of E.I. DuPont

Description

This is a 4-way 2-position, direct acting, spool type solenoid valve. This valve can be used in applications with double acting actuators held in position by a pilot operated check valve or overcenter valve to ensure the pilot line is drained to tank.

Pressure drop

Cartridge only

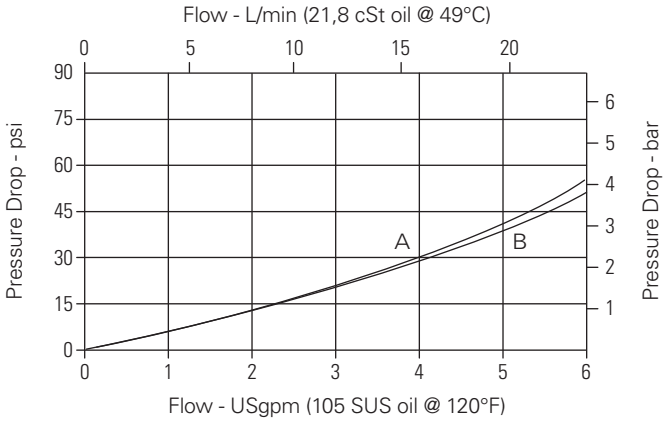

A - Port 3 to port 4
B - Port 1 to port 2

Where measurements are critical request certified drawings. We reserve the right to change specifications without notice.

SV4-10-4/4M/4R - Solenoid valve

4-way, 2-position, spool type solenoid valve
23 L/min (6 USgpm) • 210 bar (3000 psi)

Model code

SV4 – 10 (V) – 4 (*) – ** – ** * – 00**

1 2 3 4 5 6 7 8 9

1 Function
SV4 - Solenoid valve

2 Size
10 - 10 size

3 Seal material
Blank - Buna-N
V - Viton®

4 Style
4 - 4-way, 2-position

5 Manual override option
Blank - No manual override
M - Knob type
R - Cable type

For valve dimensions with Manual override option installed see page A-980.

6 Port size

Code	Port size	Housing number
0	Cartridge only	
3B	3/8" BSPP	02-179705*
6T	SAE 6	566161*
2G	1/4" BSPP	876709
3G	3/8" BSPP	876715
6H	SAE 6	876708
8H	SAE 8	876713

*Light duty housing
See section J for housing details.

7 Voltage rating
00 - No coil
12D - 12VDC
24D - 24VDC
36D - 36VDC
24A - 24VAC
115A - 115VAC
230A - 230VAC
12B - 12VDC/w diode*
24B - 24VDC/w diode*

*Optional arc suppression diode.

8 Connector types
Blank - No coil
G - ISO 4400 DIN 43650
Q - Spade terminals
W - Flying lead
N - Deutsch (DC only)
Y - Amp JR (DC only)
D - Metripack 150 male (DC only)
J - Metripack 280 male (DC only)

For coil part numbers and dimensions see section C.

9 Special features
00 - None

(Only required if valve has Special features omitted if "00".)

Note: Use J series 23, W coils with this solenoid valve.

Dimensions
mm (inch)

Torque cartridge in steel housing 47-54 Nm (35-40 ft lbs)

Note: When solenoid valve is ordered as Cartridge only, nut is included.

Cartridge only

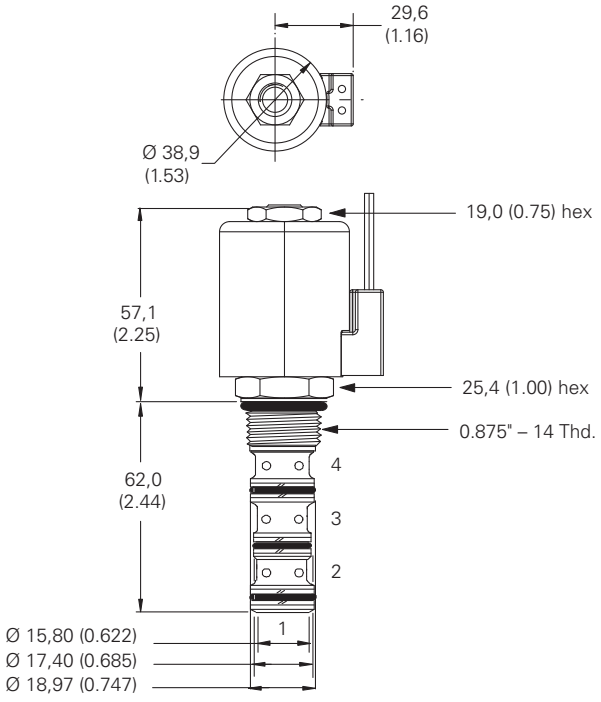

Installation drawing

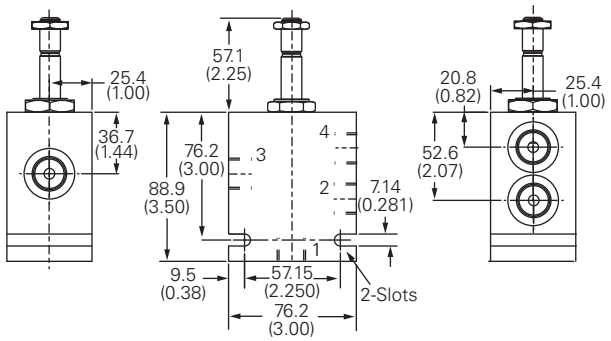

⚠ Warning
Maintain 5-8 Nm (4-6 ft lbs) maximum torque on valve tube nut.

Over tightening may cause valve failure.

Where measurements are critical request certified drawings. We reserve the right to change specifications without notice.

SV5-10-4/4M/4R - Solenoid valve

4-way, 2-position, spool type solenoid valve
23 L/min (6 USgpm) • 210 bar (3000 psi)

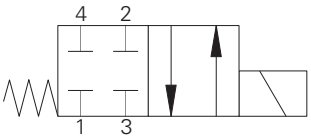

Operation

In the de-energized position all ports are blocked.

In the energized position flow is allowed from port 3 to port 2 and from port 4 to port 1.

Features

Hardened, ground and honed working parts to limit leakage. IP69K Tough coil compatibility. Continuously rated. Compact design with low Pressure drop. Rated pressure on all ports.

Sectional view

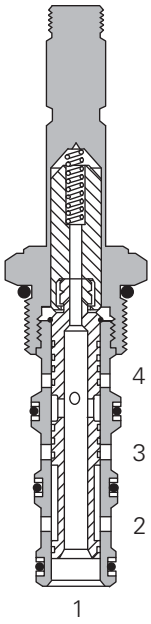

Performance data

Ratings and specifications

Performance data is typical with fluid at 21,8 cSt (105 SUS) and 49° C (120° F)	
Typical application pressure (all ports)	210 bar (3000 psi)
Cartridge fatigue pressure (infinite life)	210 bar (3000 psi)
Rated flow	23 L/min (6 USgpm)
Internal leakage	164 cm^3/min (10 in^3/min) max @ 210 bar (3000 psi)
Temperature range	-40° to 120°C (-40° to 248°F)
Coil duty	Continuous from 85% to 110% of nominal voltage
Cavity	C-10-4
Fluids	All general purpose hydraulic fluids such as: MIL-H-5606, SAE 10, SAE 20 etc.
Filtration	Cleanliness code 18/**16/13**
Housing material (standard)	Aluminum
Weight including coil	0,44 kg (0.96 lbs)
Seal kit	889625 (Buna-N), 566080 (Viton®)

Viton is a registered trademark of E.I. DuPont

Description

This is a 4-way 2-position, direct acting, spool type solenoid valve. This valve can be used in applications where a double acting actuator needs to be isolated.

Pressure drop

Cartridge only

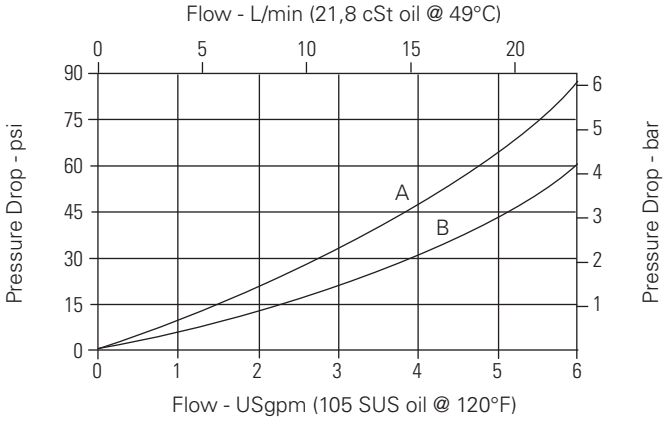

A - Port 1 to port 4
B - Port 3 to port 2

Where measurements are critical request certified drawings. We reserve the right to change specifications without notice.

SV5-10-4/4M/4R - Solenoid valve

4-way, 2-position, spool type solenoid valve
23 L/min (6 USgpm) • 210 bar (3000 psi)

Model code

SV5	–	10	(V)	–	4	(*)	–	**	–	****	*	–	00
1		2	3		4	5		6		7	8		9

1 Function
SV5 - Solenoid valve

2 Size
10 - 10 size

3 Seal material
Blank - Buna-N
V - Viton®

4 Style
4 - 4-way, 2-position

5 Manual override option
Blank - No manual override
M - Knob type
R - Cable type

For valve dimensions with Manual override option installed see page A-980.

6 Port size

Code	Port size	Housing number
0	Cartridge only	
3B	3/8" BSPP	02-179705*
6T	SAE 6	566161*
2G	1/4" BSPP	876709
3G	3/8" BSPP	876715
6H	SAE 6	876708
8H	SAE 8	876713

*Light duty housing
See section J for housing details.

7 Voltage rating
00 - No coil
12D - 12VDC
24D - 24VDC
36D - 36VDC
24A - 24VAC
115A - 115VAC
230A - 230VAC
12B - 12VDC/w diode*
24B - 24VDC/w diode*

*Optional arc suppression diode.

8 Connector types
Blank - No coil
G - ISO 4400 DIN 43650
Q - Spade terminals
W - Flying lead
N - Deutsch (DC only)
Y - Amp JR (DC only)
D - Metripack 150 male (DC only)
J - Metripack 280 male (DC only)

For coil part numbers and dimensions see section C.

9 Special features
00 - None

(Only required if valve has Special features omitted if "00".)

Note: Use J series 23 W coils with this solenoid valve.

Dimensions
mm (inch)

Torque cartridge in steel housing 47-54 Nm (35-40 ft lbs)

Note: When solenoid valve is ordered as Cartridge only, nut is included.

Cartridge only

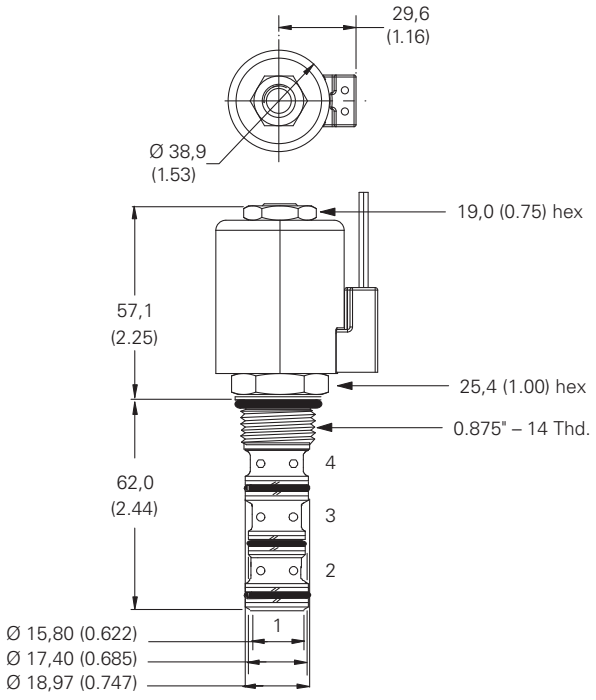

Installation drawing

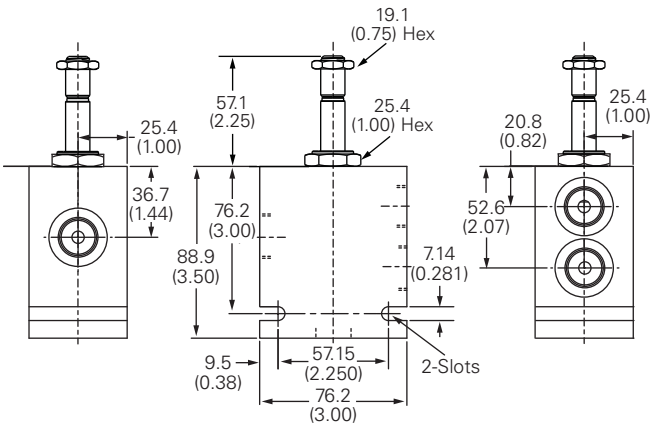

⚠ Warning
Maintain 5-8 Nm (4-6 ft lbs) maximum torque on valve tube nut.

Over tightening may cause valve failure.

Where measurements are critical request certified drawings. We reserve the right to change specifications without notice.

SV7-10-4/4P/4S - Solenoid valve

4-way, 2-position, spool type solenoid valve
17 L/min (5 USgpm) • 210 bar (3000 psi)

A

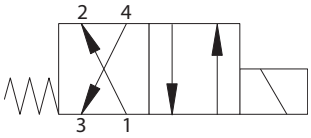

Operation

In the de-energized position this valve allows flow from port 3 to port 4 and from port 2 to port 1.

In the energized position flow is allowed from port 3 to port 2 and from port 4 to port 1.

Features

Hardened, ground and honed working parts to limit leakage. IP69K Tough coil compatibility. Continuously rated. Compact design with low Pressure drop. Rated pressure on all ports.

Sectional view

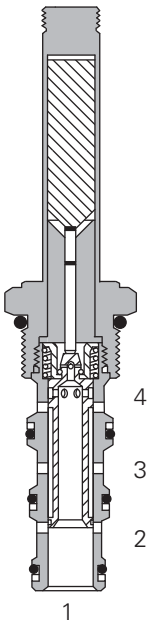

Performance data

Ratings and specifications

Performance data is typical with fluid at 21,8 cSt (105 SUS) and 49° C (120° F)	
Typical application pressure (all ports)	210 bar (3000 psi)
Cartridge fatigue pressure (infinite life)	210 bar (3000 psi)
Rated flow	17 L/min (5 USgpm)
Internal leakage	164 cm^3/min (10 in^3/min) max @ 210 bar (3000 psi)
Temperature range	-40° to 120°C (-40° to 248°F)
Coil duty	Continuous from 85% to 110% of nominal voltage
Cavity	C-10-4
Fluids	All general purpose hydraulic fluids such as: MIL-H-5606, SAE 10, SAE 20 etc.
Filtration	Cleanliness code 18/**16/13**
Housing material (standard)	Aluminum
Weight including coil	0,44 kg (0.96 lbs)
Seal kit	889625 (Buna-N), 566080 (Viton®)

Viton is a registered trademark of E.I. DuPont

Description

This is a 4-way 2-position, direct acting, spool type solenoid valve. This valve can be used in applications where the motion of a double acting cylinder or a motor needs to be reversed.

Pressure drop

Cartridge only

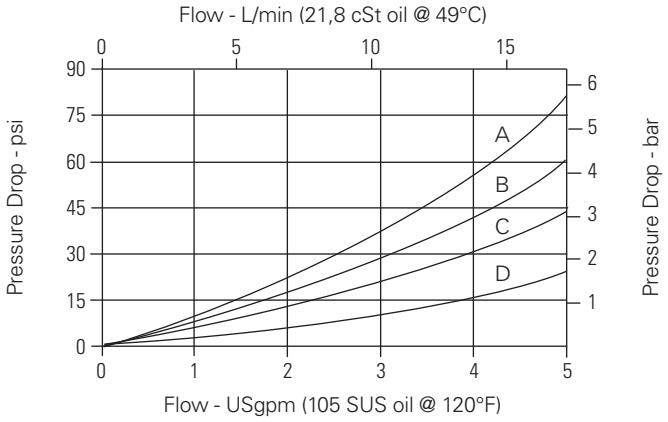

A - Port 4 to port 1 energized
B - Port 3 to port 2 energized
C - Port 3 to port 4 de-energized
D - Port 2 to port 1 de-energized

Where measurements are critical request certified drawings. We reserve the right to change specifications without notice.

SV7-10-4/4P/4S - Solenoid valve

4-way, 2-position, spool type solenoid valve
17 L/min (5 USgpm) • 210 bar (3000 psi)

Model code

SV7 – 10 (V) – 4 (*) – ** – ** * – 00**

1 2 3 4 5 6 7 8 9

1 Function
SV7 - Solenoid valve

2 Size
10 - 10 size

3 Seal material
Blank - Buna-N
V - Viton®

4 Style
4 - 4-way, 2-position

5 Manual override option
Blank - No manual override
P - Push type
S - Screw type

For valve dimensions with Manual override option installed see page A-980.

6 Port size

Code	Port size	Housing number
0	Cartridge only	
3B	3/8" BSPP	02-179705*
6T	SAE 6	566161*
2G	1/4" BSPP	876709
3G	3/8" BSPP	876715
6H	SAE 6	876708
8H	SAE 8	876713

*Light duty housing
See section J for housing details.

7 Voltage rating
00 - No coil
12D - 12VDC
24D - 24VDC
36D - 36VDC
24A - 24VAC
115A - 115VAC
230A - 230VAC
12B - 12VDC/w diode*
24B - 24VDC/w diode*

*Optional arc suppression diode.

8 Connector types
Blank - No coil
G - ISO 4400 DIN 43650
Q - Spade terminals
W - Flying lead
N - Deutsch (DC only)
Y - Amp JR (DC only)
D - Metripack 150 male (DC only)
J - Metripack 280 male (DC only)

For coil part numbers and dimensions see section C.

9 Special features
00 - None

(Only required if valve has Special features omitted if "00".)

Note: Use J series 23 W coils with this solenoid valve.

Dimensions
mm (inch)

Torque cartridge in steel housing 47-54 Nm (35-40 ft lbs)

Note: When solenoid valve is ordered as Cartridge only, nut is included.

Cartridge only

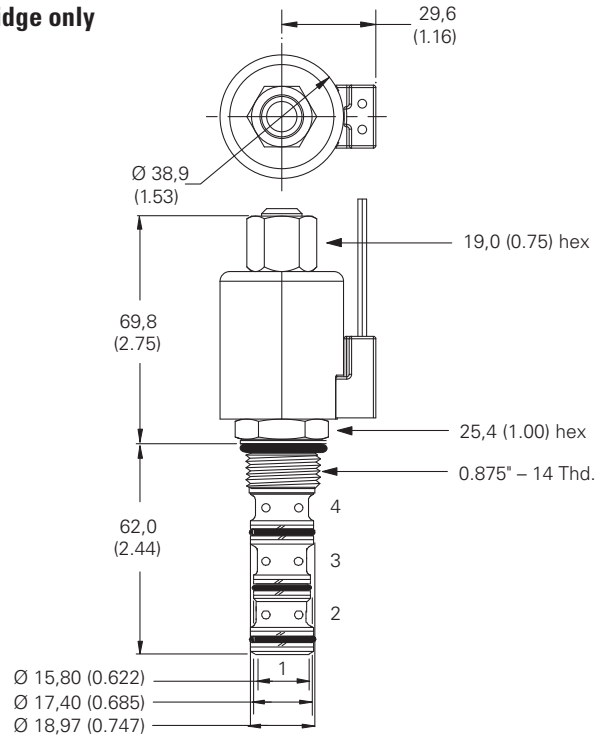

Installation drawing

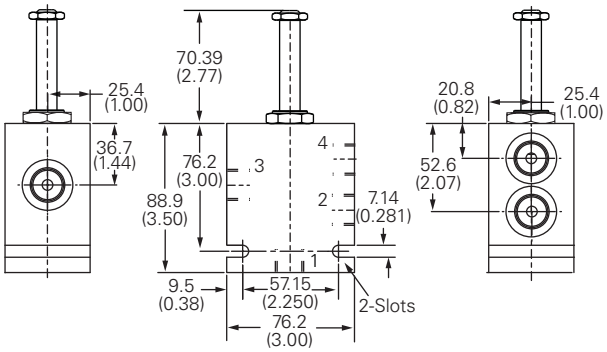

⚠ Warning
Maintain 5-8 Nm (4-6 ft lbs) maximum torque on valve tube nut. Over tightening may cause valve failure.

Where measurements are critical request certified drawings. We reserve the right to change specifications without notice.

SV17M-10-4P - Solenoid valve

4-way, 2-position, spool type solenoid valve
17 L/min (5 USgpm) • 350 bar (5000 psi)

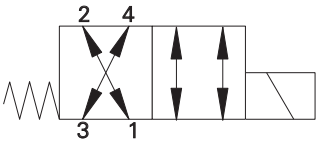

Operation

In the de-energized position this valve allows flow between port 3 to port 4 and between port 2 to port 1 in both directions.

In the energized position flow is allowed between port 3 to port 2 and between port 4 to port 1in both directions.

Features

Hardened, ground and honed working parts to limit leakage. IP69K Large ToughCoil compatibility. Continuously rated. Compact design with low Pressure drop. Rated pressure on all ports. Working pressure 350 bar.

Sectional view

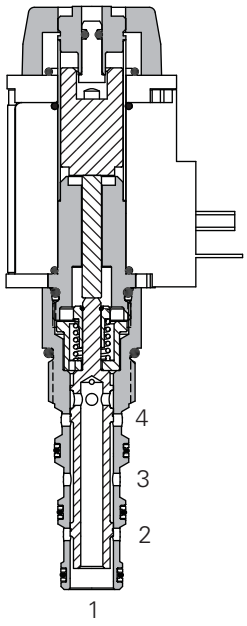

Performance data

Ratings and specifications

Performance data is typical with fluid at 21,8 cSt (105 SUS) and 49°C (120°F)	
Typical application pressure (all ports except port 1)	350 bar (5000 psi)
Typical application pressure at port 1	210 bar (3000 psi)
Cartridge fatigue pressure (infinite life)	350 bar (5000 psi)
Rated flow	17 L/min (5 USgpm)
Internal leakage	350 cc/min (21.5 in^3/min) @ 210 bar (3000 psi)
Temperature range	-40° to 120°C (-40° to 248°F)
Coil duty	Continuos from 85% to 110% of nominal voltage
Cavity	C-10-4
Fluids	All general purpose hydraulic fluids such as: MIL-H-5606, SAE 10, SAE 20, etc.
Filtration Cleanliness code	18/16/13
Standard housing materials	Steel
Weight including coil	0.44 kg (0.96 lbs)
Seal kit	889625 Buna-N), 566080 (Viton®)

Viton is a registered trademark of E.I. DuPont

Description

This is a 4-way 2-position, direct acting, high pressure, spool type solenoid valve. This valve can be used in applications where the motion of a double acting cylinder or a motor needs to be reversed.

Pressure drop

Cartridge only

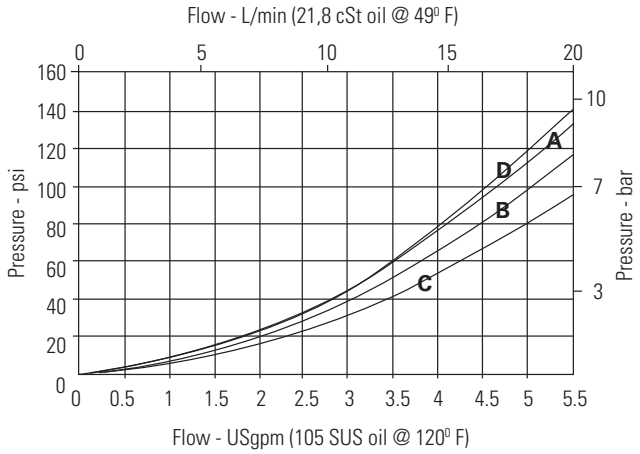

A - Port 3 to port 2 energized
B - Port 3 to port 4 de-energized
C - Port 2 to port 1 de-energized
D - Port 4 to port 1 energized

Where measurements are critical request certified drawings. We reserve the right to change specifications without notice.

SV17M-10-4P - Solenoid valve

4-way, 2-position, spool type solenoid valve
17 L/min (5 USgpm) • 350 bar (5000 psi)

Model code

SV17	*	–	10	*	4P	–	****	–	****	–	*	*	**	–	**
1	2		3	4	5		6		7		8	9	10		11

1 Function

SV17 - Solenoid valve

2 Max flow

M - 23 L/min (6 USgpm)

3 Size

10 - 10 Size

4 Seal material

Blank - Buna-N
V - Viton®

5 Style

4P - 4 way push type manual override

6 Port size

Code	Port size	Housing number	
		Aluminium	Steel
0	Cartridge only		
A2G	1/4" BSPP	02-185804	
A3G	3/8" BSPP	02-185805	
A6H	SAE 6	02-185802	
A8H	SAE 8	02-185803	
S2G	1/4" BSPP		02-175139
S3G	3/8"		02-175140
S6T	SAE 6		02-175137
S8T	SAE 8		02-175140

7 Voltage rating

00 - No coil
12D - 12VDC
24D - 24VDC
12B - 12VDC/w diode*
24B - 24VDC/w diode*

*Optional arc suppression diode.

8 Connector types

Blank - No coil
W - Flying lead (DC only)
N - Deutsch male, DT04-2P, integrated

For coil part numbers and dimensions see section C.

9 Coil types

Blank - No coil
R - R series (30W) Large ToughCoil

10 Coil special features

Blank - No coil
00 - No special feature

11 Special features

00 - None

(Only required if valve has Special features omitted if "00".)

Dimensions

mm (inch)

Torque cartridge in aluminum housing 47-54 Nm (35-40 ft. lbs)

Torque cartridge in steel housing 68-75 Nm (50-55 ft. lbs)

Note: When solenoid vale is ordered as Cartridge only, coil nut is included.

Cartridge only

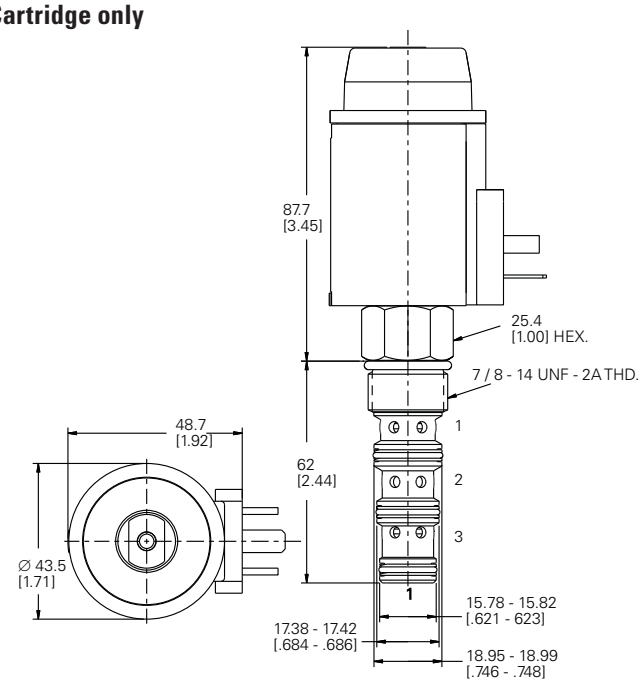

Installation drawing (Steel)

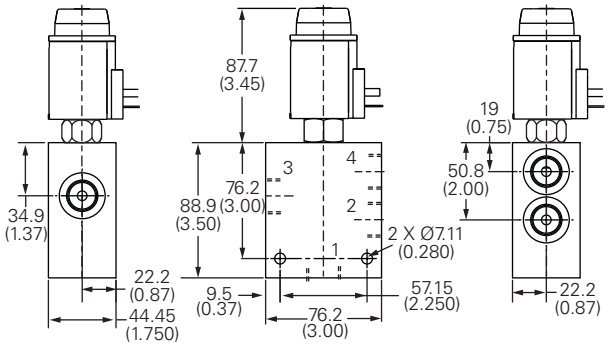

⚠ Warning

Maintain 2.5-3 Nm (1.8-2.2 ft. lbs) maximum torque on valve tube nut. Over tightening may cause valve failure.

⚠ Warning

Aluminum housings can be used for pressures up to 210 bar (3000 psi). Steel housings **must** be used for operating pressures **above** 210 bar (3000 psi).

Where measurements are critical request certified drawings. We reserve the right to change specifications without notice.

SV2M-12-4 - Solenoid valve

4-way, 2-position, spool type solenoid valve
Up to 42 L/min (11 USgpm) • 210 bar (3000 psi)

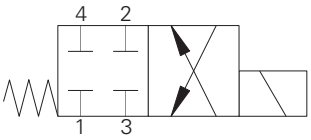

Operation

In the de-energized position all ports are blocked.

In the energized position flow is allowed between port 3 to port 4 and between port 2 to port 1 in both directions.

Features

Hardened, ground and honed working parts to limit leakage. IP69K Large ToughCoil compatibility. Continuously rated. Compact design with low Pressure drop. Rated pressure on all ports.

Sectional view

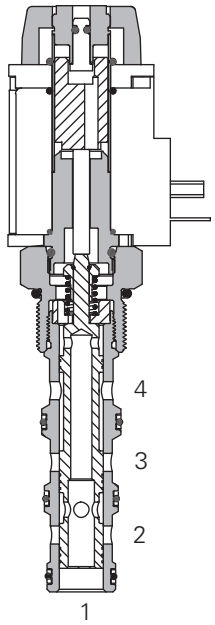

Performance data

Ratings and specifications

Performance data is typical with fluid at 21,8 cSt (105 SUS) and 49° C (120° F)	
Typical application pressure	210 bar (3000 psi)
Cartridge fatigue pressure (infinite life)	210 bar (3000 psi)
Rated flow	42 L/min (11 USgpm)
Internal leakage	300 cm^3/min (21.5 in^3/min) max @ 210 bar (3000 psi)
Temperature range	-40° to 120°C (-40° to 248°F)
Coil duty	Continuous from 85% to 110% of nominal voltage
Cavity	C-12-4
Fluids	All general purpose hydraulic fluids such as: MIL-H-5606, SAE 10, SAE 20 etc.
Filtration	Cleanliness code 18/16/13
Housing material (standard)	Aluminum
Weight including coil	0,86 kg (1.9 lbs)
Seal kit	2160979 (Buna-N), 2160980 (Viton®)

Viton is a registered trademark of E.I. DuPont

Description

This is a 4-way 2-position, direct acting, spool type solenoid valve. This valve can be used in applications where a double acting actuator needs to be isolated.

Pressure drop

Cartridge only

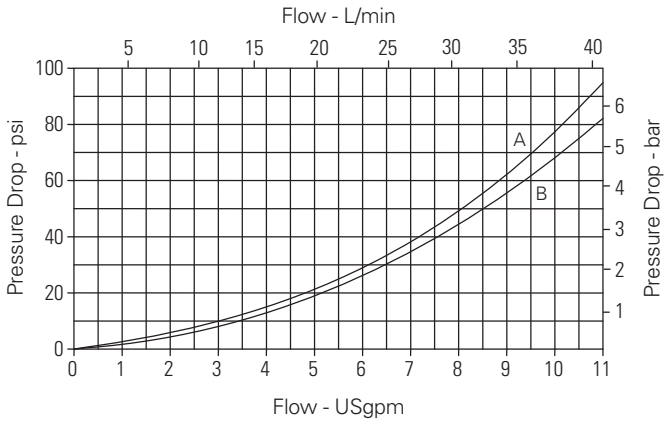

A - Port 2 to port 1
B - Port 3 to port 4

Where measurements are critical request certified drawings. We reserve the right to change specifications without notice.

SV2M-12-4 - Solenoid valve

4-way, 2-position, spool type solenoid valve
Up to 42 L/min (11 USgpm) • 210 bar (3000 psi)

Model code

SV2	*	–	12	*	–	4P	–	****	–	****	*	*	**	–	**
1	2		3	4		5		6		7	8	9	10		11

1 Function
SV2 - Solenoid valve

2 Max flow
M - 42 L/min (11USgpm)

3 Size
12 - 12 size

4 Seal material
Blank - Buna-N
V - Viton®

5 Style
4P - 4-way, push type manual override

6 Port size

Code	Port size	Housing number
0	Cartridge only	
A6G	3/4" BSPP	5986432-001
A10T	SAE 10	6030517-001
A12H	SAE 12	5986436-001

See section J for housing details.

7 Voltage rating
00 - No coil
12D - 12VDC
24D - 24VDC
12B - 12VDC/w diode*
24B - 24VDC/w diode*

*Optional arc suppression diode.

8 Connector types
Blank - No coil
W - Flying lead
N - Deutsch male, DT04-2P, integrated

For coil part numbers and dimensions see section C.

9 Coil types
Blank - No coil
L - L series (30W EN 490) used for SV2A-12
R - R series (30W) Large ToughCoil

10 Coil special features
Blank - No coil
00 - No special feature

11 Special features
00 - None

(Only required if valve has special features omitted if "00".)

SF - Soft shift

Dimensions

mm (inch)

Torque cartridge in steel housing 81-95 Nm (60-70 ft lbs)

Note: When solenoid valve is ordered as Cartridge only, nut is included.

Cartridge only

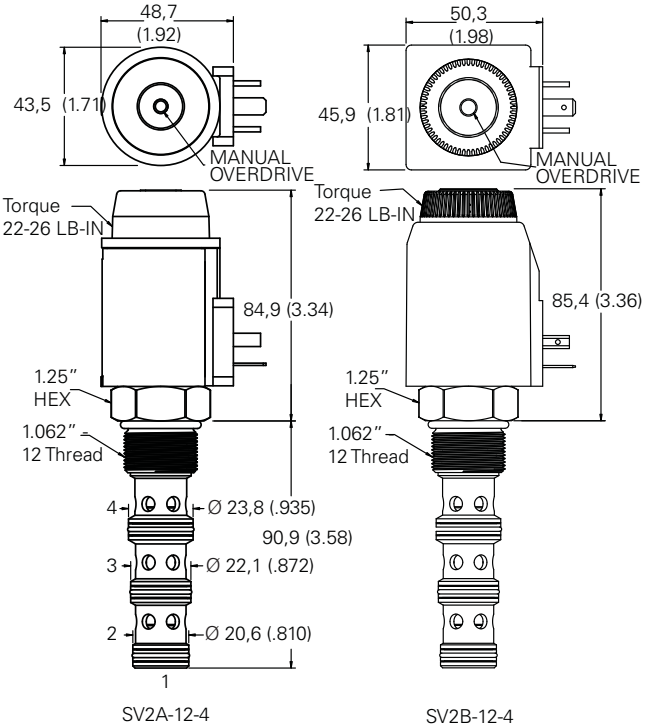

SV2A-12-4 SV2B-12-4

Installation drawing

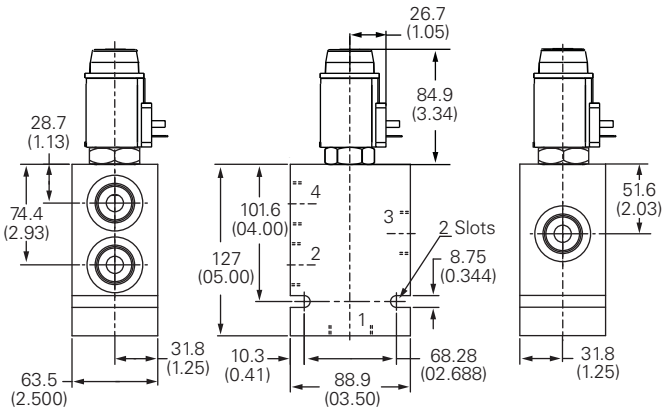

⚠ Warning
Maintain 2.5-3 Nm (1.8-2.2 ft lbs) maximum torque on valve tube nut. Over tightening may cause valve failure.

Where measurements are critical request certified drawings. We reserve the right to change specifications without notice.

SV12M-12-4 - Solenoid valve

4-way, 2-position, spool type solenoid valve
Up to 42 L/min (11 USgpm) • 350 bar (5000 psi)

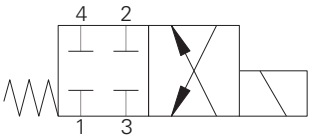

Operation

In the de-energized position all ports are blocked.

In the energized position flow is allowed between port 3 to port 4 and between port 2 to port 1 in both directions.

Features

Hardened, ground and honed working parts to limit leakage. IP69K Large ToughCoil compatibility. Continuously rated. Compact design with low pressure drop. Rated pressure on all ports. Working pressure 350 bar.

Sectional view

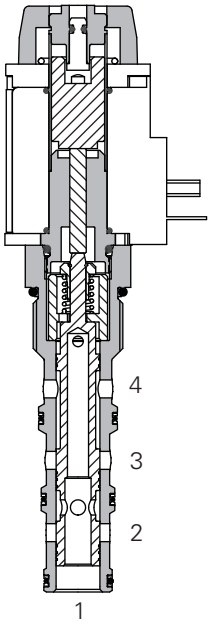

Performance data

Ratings and specifications

Performance data is typical with fluid at 21,8 cSt (105 SUS) and 49°C (120°F)	
Typical application pressure (all ports except port 1)	350 bar (5000 psi)
Typical application pressure at port 1	210 bar (3000 psi)
Cartridge fatigue pressure (infinite life)	350 bar (5000 psi)
Rated flow	42 L/min (11 USgpm)
Internal leakage	350 cc/min (21.5 in3/min) @ 210 bar (3000 psi)
Temperature range	-40° to 120°C (-40° to 248°F)
Coil duty	Continuos from 85% to 110% of nominal voltage
Cavity	C-12-4
Fluids	All general purpose hydraulic fluids such as: MIL-H-5606, SAE 10, SAE 20, etc.
Filtration Cleanliness code	18/16/13
Standard housing materials	Steel
Weight including coil	0.86 kg (1.9 lbs)
Seal kit	2160979 Buna-N), 2160980 (Viton®)

Viton is a registered trademark of E.I. DuPont

Description

This is a 4-way 2-position, direct acting, high pressure, spool type solenoid valve. This valve can be used in applications where a double acting actuator needs to be isolated.

Pressure drop

Cartridge only

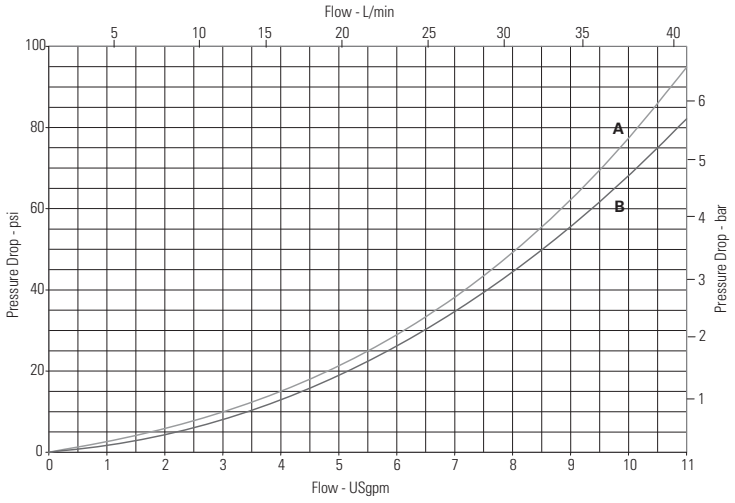

A - Port 2 to port 1
B - Port 1 to port 4

Where measurements are critical request certified drawings. We reserve the right to change specifications without notice.

SV12M-12-4 - Solenoid valve

4-way, 2-position, spool type solenoid valve
Up to 42 L/min (11 USgpm) • 350 bar (5000 psi)

Model code

SV12	*	–	12	*	4P	–	****	–	****	–	*	*	**	–	**
1	2		3	4	5		6		7		8	9	10		11

1 Function
SV12 - Solenoid valve

2 Max flow
M - 42 L/min (11USgpm)

3 Size
12 - 12 size

4 Seal material
Blank - Buna-N
V - Viton®

5 Style
4P - 4-way, push type manual override

6 Port size

Code	Port size	Housing number	
		Aluminium	Steel
0	Cartridge only		
A6G	3/4" BSPP	5986432-001	
A10H	SAE 10	5986434-001	
A12H	SAE 12	5986436-001	
S6G	3/4" BSPP		5991073-001
S10T	SAE 10		5991074-001
S12T	SAE 12		5991075-001

7 Voltage rating
00 - No coil
12D - 12VDC
24D - 24VDC
12B - 12VDC/w diode*
24B - 24VDC/w diode*

*Optional arc suppression diode.

8 Connector types
Blank - No coil
W - Flying lead (DC only)
N - Deutsch male, DT04-2P, integrated

For coil part numbers and dimensions see section C.

9 Coil types
Blank - No coil
L - L series (30W EN 490) used for SV12A-12
R - R series (30W) Large ToughCoil

10 Coil special features
Blank - No coil
00 - No special feature

11 Special features
00 - None

(Only required if valve has Special features omitted if "00".)

Dimensions
mm (inch)

Torque cartridge in steel housing 102-115 Nm (75-85 ft. lbs)

Notes: When solenoid vale is ordered as Cartridge only, coil nut is included.

Cartridge only

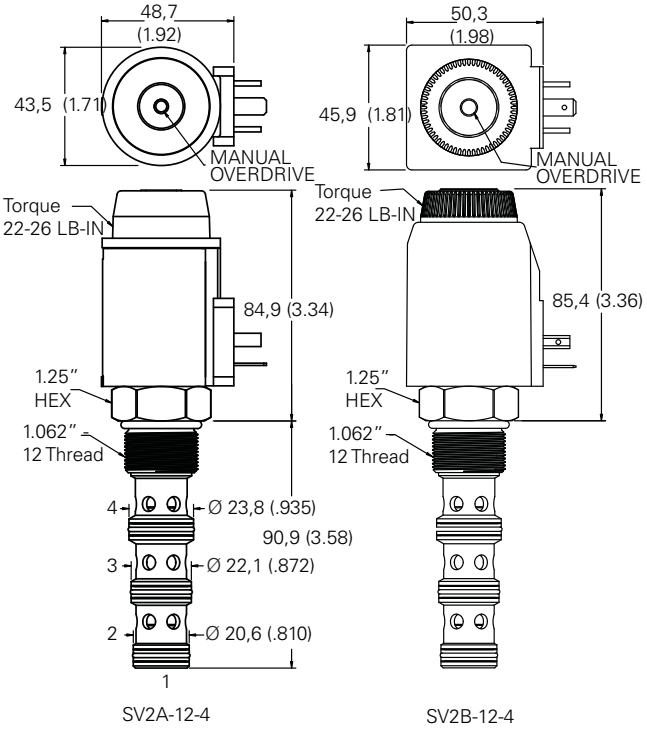

Installation drawing (Steel)

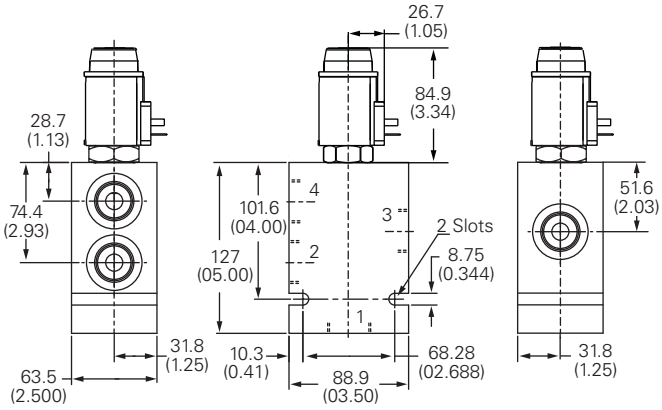

⚠ Warning
Aluminum housings can be used for pressures up to 210 bar (3000 psi). Steel housings **must** be used for operating pressures **above** 210 bar (3000 psi).

⚠ Warning
Maintain 2.5-3 Nm (1.8-2.2 ft lbs) maximum torque on valve tube nut. Over tightening may cause valve failure.

Where measurements are critical request certified drawings. We reserve the right to change specifications without notice.

SV3M-12-4 - Solenoid valve

4-way, 2-position, spool type solenoid valve
Up to 53 L/min (14 USgpm) • 210 bar (3000 psi)

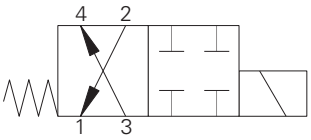

Operation

In the de-energized position flow is allowed from port 3 to port 4 and from port 2 to port 1 in both directions.

In the energized position all ports are blocked.

Features

Hardened, ground and honed working parts to limit leakage. IP69K Large ToughCoil compatibility. Continuously rated. Compact design with low pressure drop. Rated pressure on all ports.

Sectional view

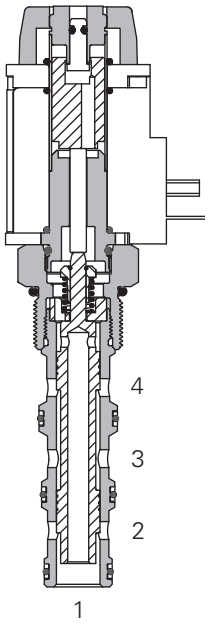

Performance data

Ratings and specifications

Performance data is typical with fluid at 21,8 cSt (105 SUS) and 49° C (120° F)	
Typical application pressure	210 bar (3000 psi)
Cartridge fatigue pressure (infinite life)	210 bar (3000 psi)
Rated flow	53 L/min (14 USgpm)
Internal leakage	300 cm^3/min (21.5 in^3/min) max @ 210 bar (3000 psi)
Temperature range	-40° to 120°C (-40° to 248°F)
Coil duty	Continuous from 85% to 110% of nominal voltage
Cavity	C-12-4
Fluids	All general purpose hydraulic fluids such as: MIL-H-5606, SAE 10, SAE 20 etc.
Filtration	Cleanliness code 18/16/13
Housing material (standard)	Aluminum
Weight including coil	0,86 kg (1.9 lbs)
Seal kit	2160979 (Buna-N), 2160980 (Viton®)

Viton is a registered trademark of E.I. DuPont

Description

This is a 4-way 2-position, direct acting, spool type solenoid valve. This valve can be used in applications where a double acting actuator needs to be isolated.

Pressure drop

Cartridge only

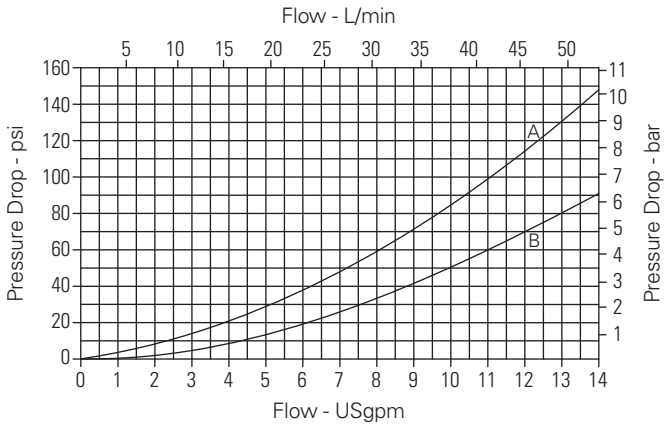

A - Port 3 to port 4
B - Port 2 to port 1

Where measurements are critical request certified drawings. We reserve the right to change specifications without notice.

SV3M-12-4 - Solenoid valve

4-way, 2-position, spool type solenoid valve
Up to 53 L/min (14 USgpm) • 210 bar (3000 psi)

Model code

SV3	*	–	12	*	–	4P	–	****	–	****	*	*	**	–	**
1	2		3	4		5		6		7	8	9	10		11

1 Function
SV3 - Solenoid valve

2 Max flow
M - 53 L/min (14USgpm)

3 Size
12 - 12 size

4 Seal material
Blank - Buna-N
V - Viton®

5 Style
4P - 4-way, push type manual override

6 Port Size

Code	Port size	Housing number
0	Cartridge only	
A6G	3/4" BSPP	5986432-001
A10T	SAE 10	6030517-001
A12H	SAE 12	5986436-001

See section J for housing details.

7 Voltage rating
00 - No coil
12D - 12VDC
24D - 24VDC
12B - 12VDC/w diode*
24B - 24VDC/w diode*

*Optional arc suppression diode.

8 Connector types
Blank - No coil
W - Flying lead
N - Deutsch male, DT04-2P, integrated

For coil part numbers and dimensions see section C.

9 Coil types
Blank - No coil
L - L series (30W EN 490) used for SV3A-12
R - R series (30W) Large ToughCoil

10 Coil series
Blank - No coil
00 - No special feature

11 Special features
00 - None
(Only required if valve has Special features omitted if "00".)
SF - Soft shift

Dimensions
mm (inch)

Torque cartridge in steel housing 81-95 Nm (60-70 ft lbs)

Note: When solenoid valve is ordered as Cartridge only, nut is included.

Cartridge only

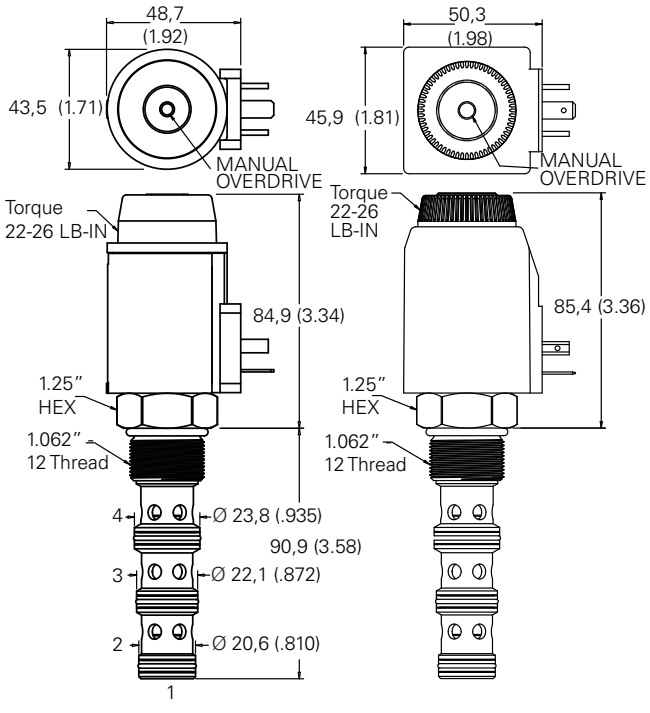

SV3A-12-4 SV3B-12-4

Installation drawing

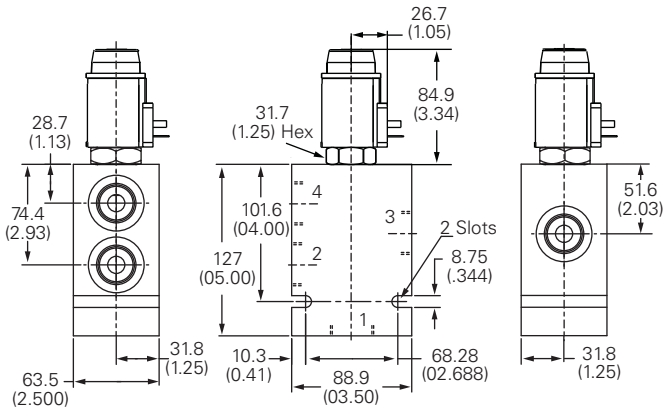

⚠ Warning
Maintain 2.5-3 Nm (1.8-2.2 ft lbs) maximum torque on valve tube nut. Over tightening may cause valve failure.

Where measurements are critical request certified drawings. We reserve the right to change specifications without notice.

SV13M-12-4 - Solenoid valve

4-way, 2-position, spool type solenoid valve
Up to 53 L/min (14 USgpm) • 350 bar (5000 psi)

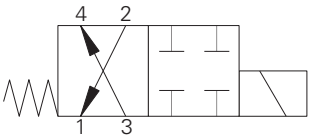

Operation

In the de-energized position flow is allowed from port 3 to port 4 and from port 2 to port 1 in both directions .

In the energized position all ports are blocked.

Features

Hardened, ground and honed working parts to limit leakage. IP69K Large ToughCoil compatibility. Continuously rated. Compact design with low pressure drop. Rated pressure on all ports. Working pressure 350 bar.

Sectional view

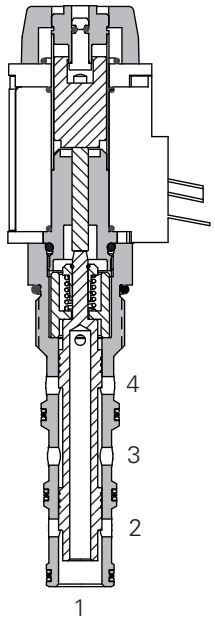

Performance data

Ratings and specifications

Performance data is typical with fluid at 21,8 cSt (105 SUS) and 49°C (120°F)	
Typical application pressure (all ports except port 1)	350 bar (5000 psi)
Typical application pressure at port 1	210 bar (3000 psi)
Cartridge fatigue pressure (infinite life)	350 bar (5000 psi)
Rated flow	53 L/min (14 USgpm)
Internal leakage	350 cc/min (21.5 in3/min) @ 210 bar (3000 psi)
Temperature range	-40° to 120°C (-40° to 248°F)
Coil duty	Continuos from 85% to 110% of nominal voltage
Cavity	C-12-4
Fluids	All general purpose hydraulic fluids such as: MIL-H-5606, SAE 10, SAE 20, etc.
Filtration Cleanliness code	18/16/13
Standard housing materials	Steel
Weight including coil	0.86 kg (1.9 lbs)
Seal kit	2160979 Buna-N), 2160980 (Viton®)

Viton is a registered trademark of E.I. DuPont

Description

This is a 4-way 2-position, direct acting, high pressure, spool type solenoid valve. This valve can be used in applications where a double acting actuator needs to be isolated.

Pressure drop

Cartridge only

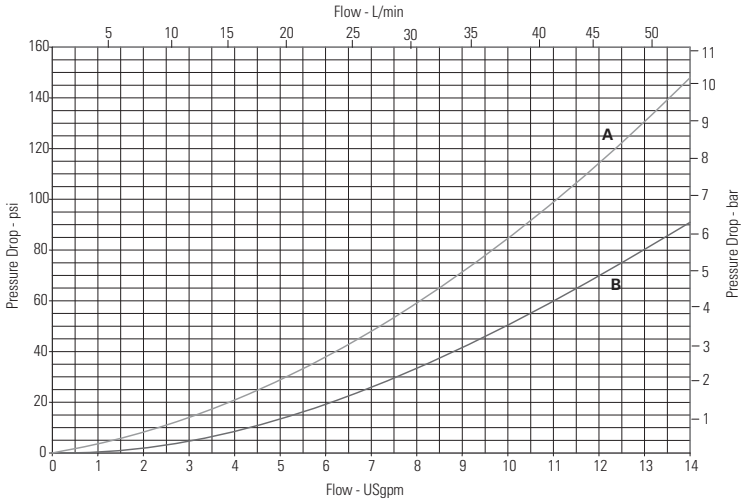

A - Port 3 to port 4
B - Port 2 to port 1

Where measurements are critical request certified drawings. We reserve the right to change specifications without notice.

SV13M-12-4 - Solenoid valve

4-way, 2-position, spool type solenoid valve
Up to 53 L/min (14 USgpm) • 350 bar (5000 psi)

Model code

SV13	*	–	12	*	4P	–	****	–	****	–	*	*	**	–	**
1	2		3	4	5		6		7		8	9	10		11

1 Function
SV13 - Solenoid valve

2 Max flow
M - 53 L/min (14 USgpm)

3 Size
12 - 12 size

4 Seal material
Blank - Buna-N
V - Viton®

5 Style
4P - 4 way, push type manual override

6 Port Size

Code	Port size	Housing number	
		Aluminium	Steel
0	Cartridge only		
A6G	3/4" BSPP	5986432-001	
A10H	SAE 10	5986434-001	
A12H	SAE 12	5986436-001	
S6G	3/4" BSPP		5991073-001
S10T	SAE 10		5991074-001
S12T	SAE 12		5991075-001

7 Voltage rating
00 - No coil
12D - 12VDC
24D - 24VDC
12B - 12VDC/w diode*
24B - 24VDC/w diode*
*Optional arc suppression diode.

8 Connector types
Blank - No coil
W - Flying lead (DC only)
N - Deutsch male, DT04-2P, integrated
For coil dimensions see section C.

9 Coil types
Blank - No coil
R - R series (30W) Large ToughCoil

10 Coil special features
Blank - No coil
00 - No special feature

11 Special features
00 - None
(Only required if valve has Special features, omitted if "00".)

Dimensions
mm (inch)

Torque cartridge in aluminum housing 81-95 Nm (60-70 ft. lbs)

Torque cartridge in steel housing 102-115 Nm (75-85 ft. lbs)

Notes: When solenoid vale is ordered as Cartridge only, coil nut is included.

Cartridge only

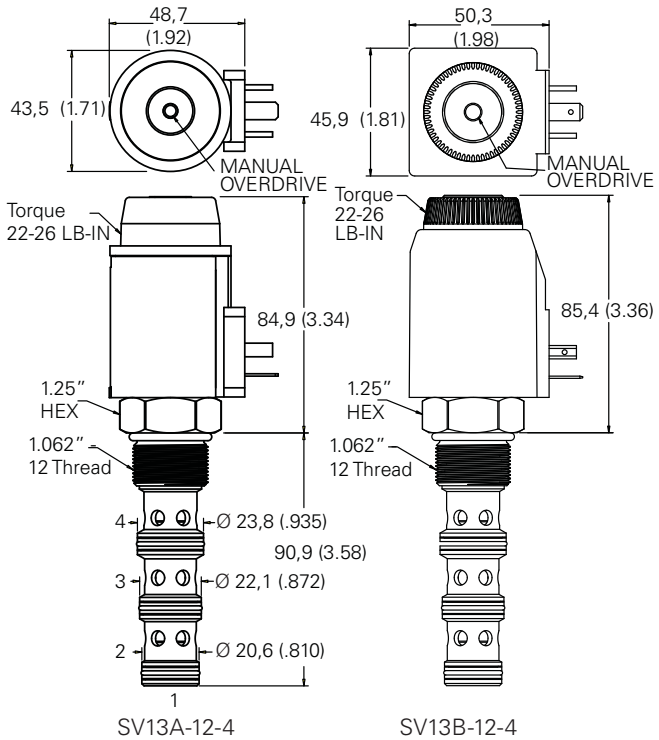

Installation drawing (Steel)

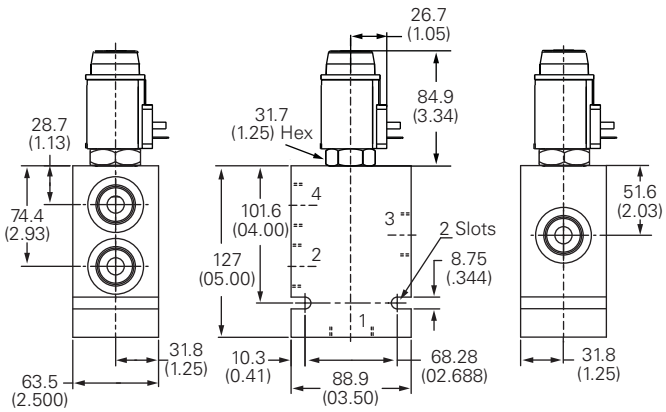

⚠ Warning
Maintain 2.5-3 Nm (1.8-2.2 ft. lbs) maximum torque on valve tube nut. Over tightening may cause valve failure.

⚠ Warning
Aluminum housings can be used for pressures up to 210 bar (3000 psi). Steel housings **must** be used for operating pressures **above** 210 bar (3000 psi).

Where measurements are critical request certified drawings. We reserve the right to change specifications without notice.

SV5M-12-4 - Solenoid valve

4-way, 2-position, spool type solenoid valve
Up to 53 L/min (14 USgpm) • 210 bar (3000 psi)

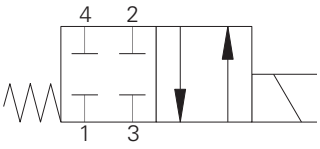

Operation

In the de-energized position all ports are blocked.

In the energized position flow is allowed between port 3 to port 2 and between port 4 to port 1 in both directions.

Features

Hardened, ground and honed working parts to limit leakage. IP69K Large ToughCoil compatibility. Continuously rated. Compact design with low pressure drop. Rated pressure on all ports.

Sectional view

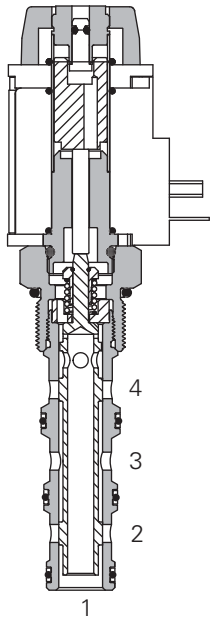

Performance data

Ratings and specifications

Performance data is typical with fluid at 21,8 cSt (105 SUS) and 49° C (120° F)	
Typical application pressure	210 bar (3000 psi)
Cartridge fatigue pressure (infinite life)	210 bar (3000 psi)
Rated flow	53 L/min (14 USgpm)
Internal leakage	300 cm^3/min (21.5 in^3/min) max @ 210 bar (3000 psi)
Temperature range	-40° to 120°C (-40° to 248°F)
Coil duty	Continuous from 85% to 110% of nominal voltage
Cavity	C-12-4
Fluids	All general purpose hydraulic fluids such as: MIL-H-5606, SAE 10, SAE 20 etc.
Filtration	Cleanliness code 18/16/13
Housing material (standard)	Aluminum
Weight including coil	0,86 kg (1.9 lbs)
Seal kit	2160979 (Buna-N), 2160980 (Viton®)

Viton is a registered trademark of E.I. DuPont

Description

This is a 4-way 2-position, direct acting, spool type solenoid valve. This valve can be used in applications where a double acting actuator needs to be isolated.

Pressure drop

Cartridge only

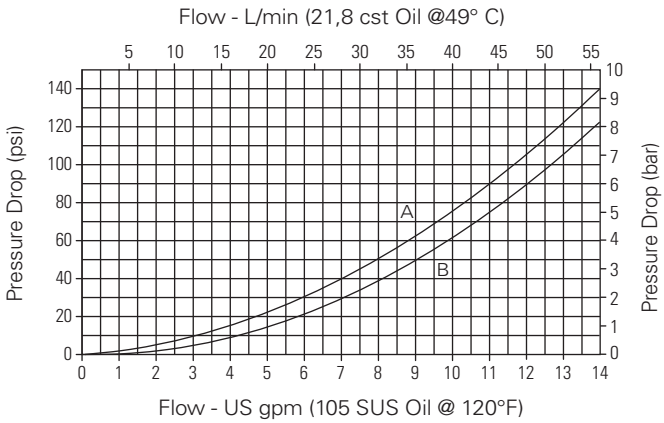

A - Port 3 to port 2
B - Port 4 to port 1

Where measurements are critical request certified drawings. We reserve the right to change specifications without notice.

SV5M-12-4 - Solenoid valve

4-way, 2-position, spool type solenoid valve
Up to 53 L/min (14 USgpm) • 210 bar (3000 psi)

Model code

SV5	*	–	12	*	–	4P	–	****	–	****	*	*	*	–	**
1	2	3		4		5		6		7	8	9	10		11

1 Function
SV5 - Solenoid valve

2 Max flow
M - 53 L/min (14USgpm)

3 Size
12 - 12 size

4 Seal material
Blank - Buna-N
V - Viton®

5 Style
4P - 4-way, push type manual override

6 Port Size

Code	Port size	Housing number
0	Cartridge only	
A6G	3/4" BSPP	5986432-001
A10T	SAE 10	6030517-001
A12H	SAE 12	5986436-001

See section J for housing details.

7 Voltage rating
00 - No coil
12D - 12VDC
24D - 24VDC
12B - 12VDC/w diode*
24B - 24VDC/w diode*
*Optional arc suppression diode.

8 Connector types
Blank - No coil
W - Flying lead
N - Deutsch male, DT04-2P, integrated
For coil part numbers and dimensions see section C.

9 Coil types
Blank - No coil
R - R series (30W) Large ToughCoil

10 Coil special features
Blank - No coil
00 - No special feature

11 Special features
00 - None
(Only required if valve has Special features omitted if "00".)
SF - Soft shift

Dimensions

mm (inch)

Cartridge only

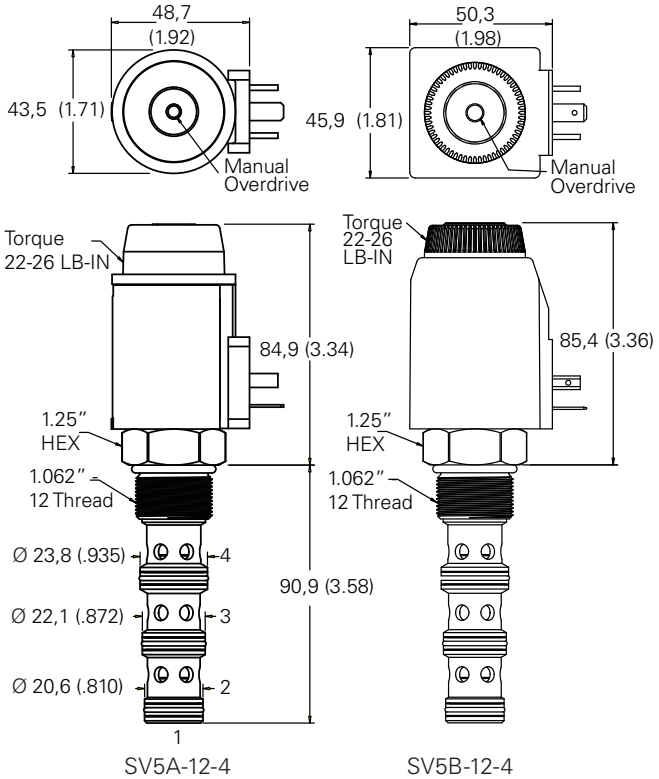

Torque cartridge in steel housing 81-95 Nm (60-75 ft lbs)

Note: When solenoid valve is ordered as Cartridge only, nut is included.

Installation drawing

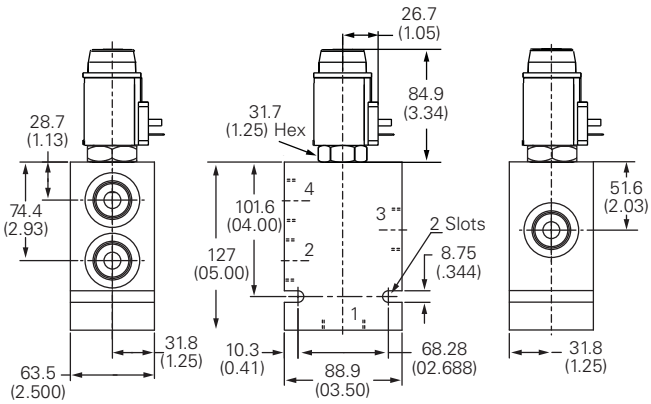

⚠ Warning
Maintain 2.5-3 Nm (1.8-2.2 ft lbs) maximum torque on valve tube nut. Over tightening may cause valve failure.

Where measurements are critical request certified drawings. We reserve the right to change specifications without notice.

SV15M-12-4 - Solenoid valve

4-way, 2-position, spool type solenoid valve
Up to 53 L/min (14 USgpm) • 350 bar (5000 psi)

A

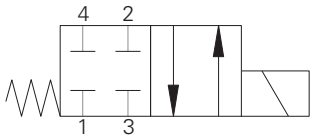

Operation

In the de-energized position all ports are blocked.

In the energized position flow is allowed between port 3 to port 2 and between port 4 to port 1 in both directions.

Features

Hardened, ground and honed working parts to limit leakage. IP69K Large ToughCoil compatibility. Continuously rated. Compact design with low pressure drop. Rated pressure on all ports. Working pressure 350 bar.

Sectional view

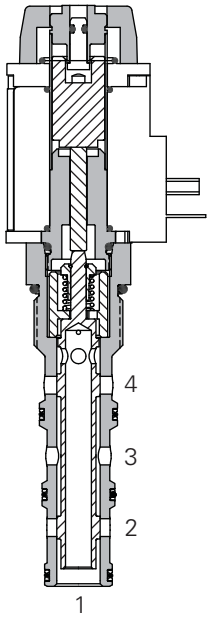

Performance data

Ratings and specifications

Performance data is typical with fluid at 21,8 cSt (105 SUS) and 49°C (120°F)	
Typical application pressure (all ports except port 1)	350 bar (5000 psi)
Typical application pressure at port 1	210 bar (3000 psi)
Cartridge fatigue pressure (infinite life)	350 bar (5000 psi)
Rated flow	53 L/min (14 USgpm)
Internal leakage	350 cc/min (21.5 in^3/min) @ 210 bar (3000 psi)
Temperature range	-40° to 120°C (-40° to 248°F)
Coil duty	Continuos from 85% to 110% of nominal voltage
Cavity	C-12-4
Fluids	All general purpose hydraulic fluids such as: MIL-H-5606, SAE 10, SAE 20, etc.
Filtration Cleanliness code	18/**16/13**
Standard housing materials	Steel
Weight including coil	0.86 kg (1.9 lbs)
Seal kit	2160979 Buna-N), 2160980 (Viton®)

Viton is a registered trademark of E.I. DuPont

Description

This is a 4-way 2-position, direct acting, high pressure, spool type solenoid valve. This valve can be used in applications where a double acting actuator needs to be isolated.

Pressure drop

Cartridge only

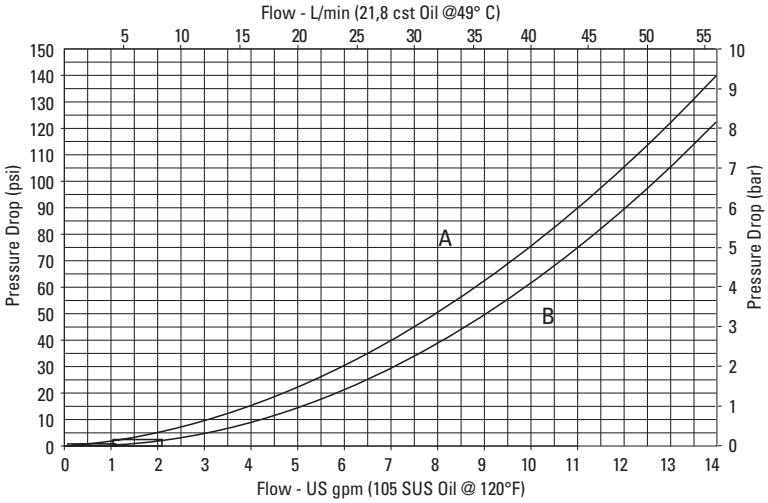

A - Port 3 to port 2
B - Port 4 to port 1

Where measurements are critical request certified drawings. We reserve the right to change specifications without notice.

SV15M-12-4 - Solenoid valve

4-way, 2-position, spool type solenoid valve
Up to 53 L/min (14 USgpm) • 350 bar (5000 psi)

Model code

SV15 * – 12 * – 4P – **** – **** * * ** – **

1 2 3 4 5 6 7 8 9 10 11

1 Function
SV15 - Solenoid valve

2 Max flow
M - 53 L/min (14USgpm)

3 Size
12 - 12 size

4 Seal material
Blank - Buna-N
V - Viton

5 Style
4P - 4-way, push type manual override

6 Port Size
0 - Cartridge only

Code	Port size	Housing number	
		Aluminium	Steel
A6G	3/4" BSPP	5986432-001	
A10H	SAE 10	5986434-001	
A12H	SAE 12	5986436-001	
S6G	3/4" BSPP		5991023-001
S10T	SAE 10		5991074-001
S12T	SAE 12		5991075-001

7 Voltage rating
00 - No coil
12D - 12VDC
24D - 24VDC
12B - 12VDC/w diode*
24B - 24VDC/w diode*

*Optional arc suppression diode.

8 Connector types
Blank - No coil
W - Flying lead (DC only)
N - Deutsch male, DT04-2P, integrated

For coil part numbers and dimensions see section C.

9 Coil types
Blank - No coil
R - R series (30W) Large ToughCoil

10 Coil special features
Blank - No coil
00 - No special feature

11 Special features
00 - None

(Only required if valve has Special features omitted if "00".)

Dimensions
mm (inch)

Torque cartridge in steel housing 102-115 Nm (75-85 ft lbs)

Torque cartridge in aluminum housing 81-95 Nm (60-70 ft lbs)

Note: When solenoid valve is ordered as Cartridge only, nut is included.

Cartridge only

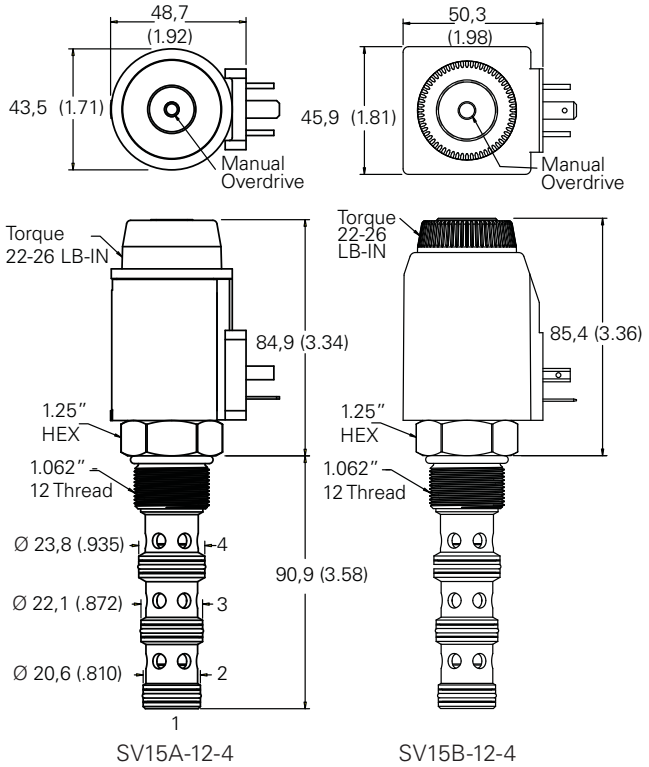

SV15A-12-4 SV15B-12-4

Installation drawing (Steel)

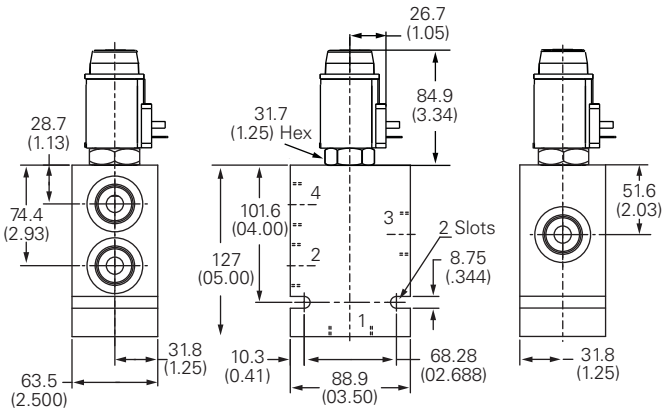

⚠ Warning
Maintain 2.5-3 Nm (1.8-2.2 ft lbs) maximum torque on valve tube nut. Over tightening may cause valve failure.

Where measurements are critical request certified drawings. We reserve the right to change specifications without notice.

SV7M-12-4 - Solenoid valve

4-way, 2-position, spool type solenoid valve
Up to 46 L/min (12 USgpm) • 210 bar (3000 psi)

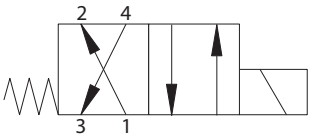

Operation

In the de-energized position this valve allows flow between port 3 to port 4 and between port 2 to port 1.

In the energized position flow is allowed between port 3 to port 2 and between port 4 to port 1.

Features

Hardened, ground and honed working parts to limit leakage. IP69K Large ToughCoil compatibility. Continuously rated. Compact design with low pressure drop. Rated pressure on all ports.

Sectional view

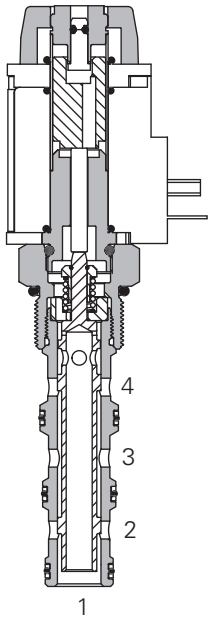

Performance data

Ratings and specifications

Performance data is typical with fluid at 21,8 cST (105 SUS) and 49°C (120°F)	
Typical application pressure	210 bar (3000 psi)
Cartridge fatigue pressure (infinite life)	210 bar (3000 psi)
Rated flow	46 L/min (12 USgpm)
Internal leakage	300 cm^3/min (21.5 in^3/min) max @ 210 bar (3000 psi)
Temperature range	-40° to 120°C (-40° to 248°F)
Coil duty	Continuous from 85% to 110% of nominal voltage
Cavity	C-12-4
Fluids	All general purpose hydraulic fluids such as: MIL-H-5606, SAE 10, SAE 20 etc.
Filtration	Cleanliness code 8/16/13
Housing material (standard)	Aluminum
Weight including coil	0,86 kg (1.9 lbs)
Seal kit	2160979 (Buna-N), 2160980 (Viton®)

Viton is a registered trademark of E.I. DuPont

Description

This is a 4-way 2-position, direct acting, spool type solenoid valve. This valve can be used in applications where the motion of a double acting cylinder or a motor needs to be reversed.

Pressure drop

Cartridge only

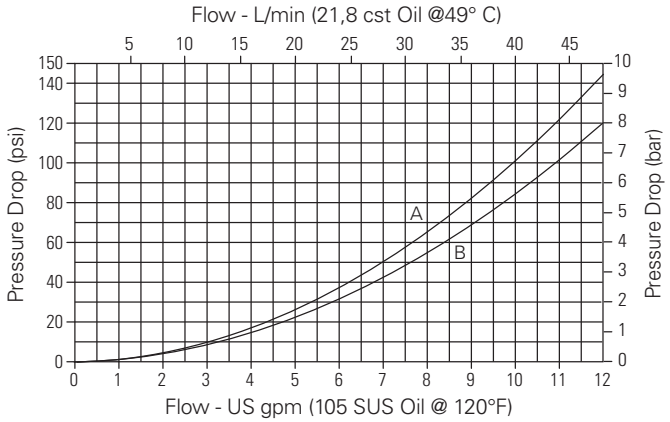

A - Port 2 to port 1, port 3 to port 4
B - Port 3 to port 2, port 4 to port 1

Where measurements are critical request certified drawings. We reserve the right to change specifications without notice.

SV7M-12-4 - Solenoid valve

4-way, 2-position, spool type solenoid valve
Up to 46 L/min (12 USgpm) • 210 bar (3000 psi)

Model code

SV7	*	–	12	*	–	4P	–	****	–	****	*	*	**	–	**
1	2	3		4		5		6		7	8	9	10		11

1 Function
SV7 - Solenoid valve

2 Max flow
M - 46 L/min (12 USgpm)

3 Size
12 - 12 size

4 Seal material
Blank - Buna-N
M - Viton

5 Style
4P - 4 way, push type manual override

6 Port size

Code	Port size	Housing number
0	Cartridge only	
A6G	3/4" BSPP	5986432-001
A10T	SAE 10	6030517-001
A12H	SAE 12	5986436-001

See section J for housing details.

7 Voltage rating
00 - No coil
12D - 12VDC
24D - 24VDC
12B - 12VDC/w diode*
24B - 24VDC/w diode*

*Optional arc suppression diode.

8 Connector types
Blank - No coil
W - Flying lead
N - Deutsch male, DT04-2P, integrated

For coil part numbers and dimensions see section C.

9 Coil types
Blank - No coil
R - R series (30W) Large ToughCoil

10 Coil special feature
Blank - Noil coil
00 - No special feature

11 Special features
00 - None

(Only required if valve has Special features omitted if "00".)

SF - Soft shift

Dimensions
mm (inch)

Torque cartridge in aluminum housing 81-95 Nm (60-70 ft lbs)

Note: When solenoid valve is ordered as Cartridge only, nut is included.

Cartridge only

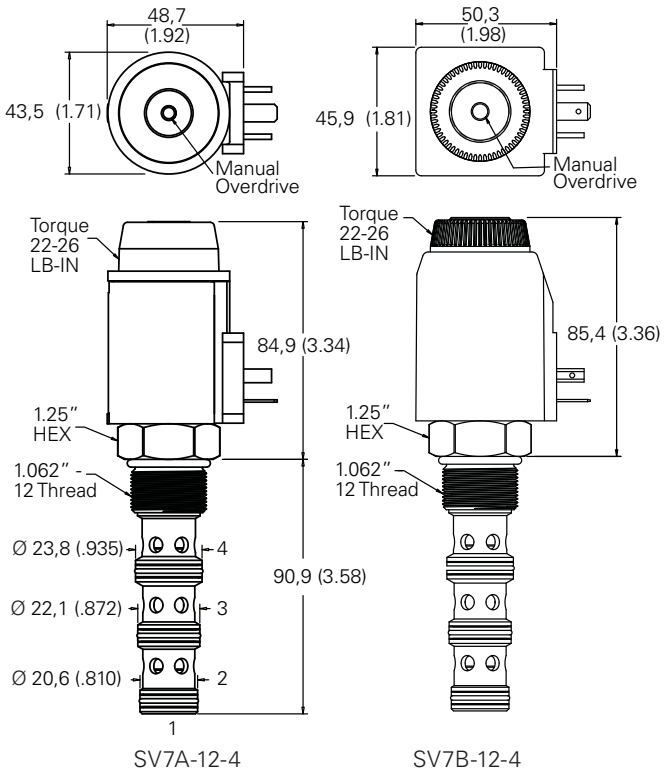

SV7A-12-4 SV7B-12-4

Installation drawing

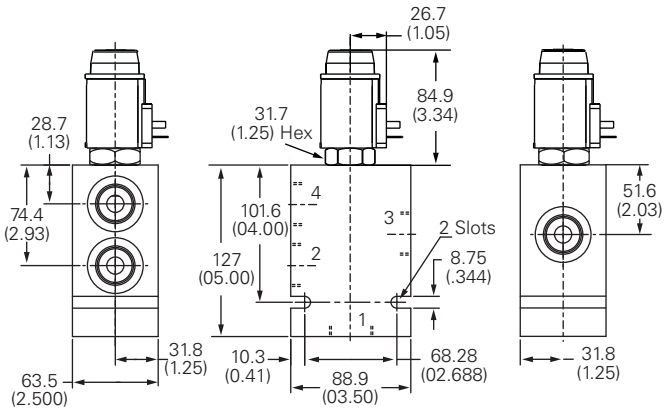

⚠ Warning
Maintain 2.5-3 Nm (1.8-2.2 ft lbs) maximum torque on valve tube nut. Over tightening may cause valve failure.

Where measurements are critical request certified drawings. We reserve the right to change specifications without notice.

SV17M-12-4 - Solenoid valve

4-way, 2-position, spool type solenoid valve
Up to 46 L/min (12 USgpm) • 350 bar (5000 psi)

A

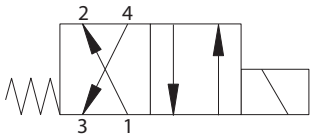

Operation

In the de-energized position this valve allows flow between port 3 to port 4 and between port 2 to port 1 in both directions.

In the energized position flow is allowed between port 3 to port 2 and between port 4 to port 1in both directions.

Features

Hardened, ground and honed working parts to limit leakage. IP69K Large ToughCoil compatibility. Continuously rated. Compact design with low pressure drop. Rated pressure on all ports. Working pressure 350 bar.

Sectional view

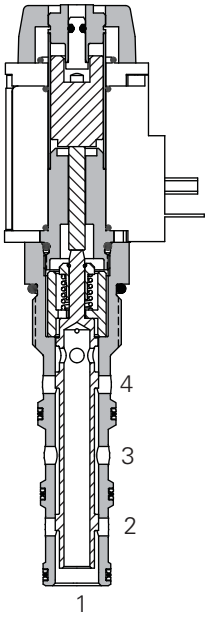

Performance data

Ratings and specifications

Performance data is typical with fluid at 21,8 cSt (105 SUS) and 49°C (120°F)	
Typical application pressure (all ports except port 1)	350 bar (5000 psi)
Typical application pressure at port 1	210 bar (3000 psi)
Cartridge fatigue pressure (infinite life)	350 bar (5000 psi)
Rated flow	38 L/min (10 USgpm)
Internal leakage	350 cc/min (21.5 in^3/min) @ 210 bar (3000 psi)
Temperature range	-40° to 120°C (-40° to 248°F)
Coil duty	Continuos from 85% to 110% of nominal voltage
Cavity	C-12-4
Fluids	All general purpose hydraulic fluids such as: MIL-H-5606, SAE 10, SAE 20, etc.
Filtration Cleanliness code	18/**16/13**
Standard housing materials	Steel
Weight including coil	0.68 kg (1.5 lbs)
Seal kit	2160979 Buna-N), 2160980 (Viton®)

Viton is a registered trademark of E.I. DuPont

Description

This is a 4-way 2-position, direct acting, high pressure, spool type solenoid valve. This valve can be used in applications where the motion of a double acting cylinder or a motor needs to be reversed

Pressure drop

Cartridge only

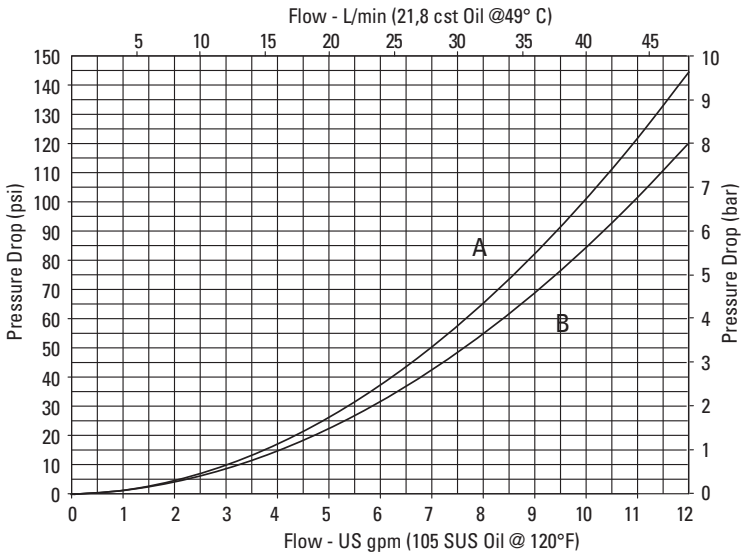

A - Port 2 to port 1, port 3 to port 4
B - Port 3 to port 4, port 3 to port 2

Where measurements are critical request certified drawings. We reserve the right to change specifications without notice.

SV17M-12-4 - Solenoid valve

4-way, 2-position, spool type solenoid valve
Up to 46 L/min (12 USgpm) • 350 bar (5000 psi)

Model code

SV17	*	–	12	*	4P	–	****	–	****	*	*	**	–	**
1	2		3	4	5		6		7	8	9	10		11

1 Function
SV17 - Solenoid valve

2 Max flow
M - 38 L/min (10 USgpm)

3 Size
12 - 12 size

4 Seal material
Blank - Buna-N
V - Viton

5 Style
4P - 4 way, push type manual override

6 Port Size
0 - Cartridge only

Code	Port size	Housing number	
		Aluminium	Steel
A6G	3/4" BSPP	5986432-001	
A10H	SAE 10	5986434-001	
A12H	SAE 12	5986436-001	
S6G	3/4" BSPP		5991073-001
S10T	SAE 10		5991074-001
S12T	SAE 12		5991075-001

7 Voltage rating
00 - No coil
12D - 12VDC
24D - 24VDC
12B - 12VDC/w diode*
24B - 24VDC/w diode*
*Optional arc suppression diode.

8 Connector types
Blank - No coil
W - Flying lead (DC only)
N - Deutsch male, DT04-2P, integrated
For coil part numbers and dimensions see section C.

9 Coil types
Blank - No coil
R - R series (30W) Large ToughCoil

10 Coil Special Feature
Blank - Noil coil
00 - No special feature

11 Special features
00 - None
(Only required if valve has Special features omitted if "00".)

Dimensions
mm (inch)

Cartridge only

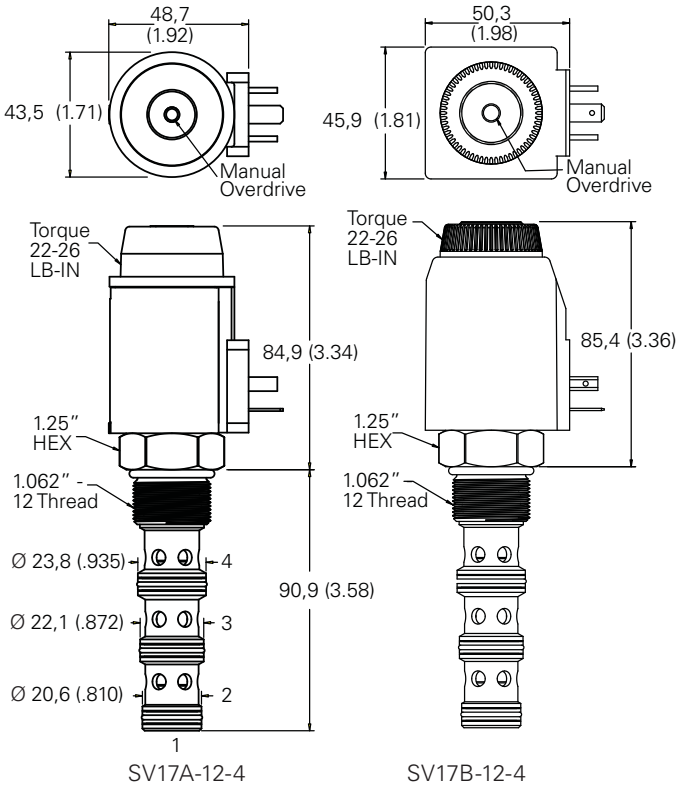

Torque cartridge in aluminum housing 81-95 Nm (60-70 ft lbs)

Note: When solenoid valve is ordered as Cartridge only, nut is included.

Installation drawing (Steel)

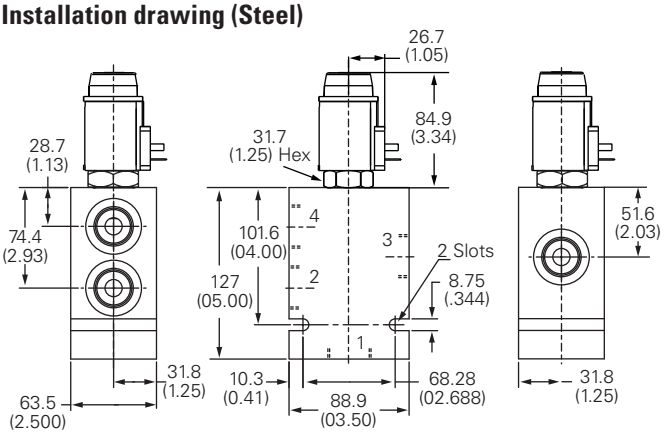

⚠ Warning
Maintain 2.5-3 Nm (1.8-2.2 ft lbs) maximum torque on valve tube nut. Over tightening may cause valve failure.

Where measurements are critical request certified drawings. We reserve the right to change specifications without notice.

SV9-8-E - Solenoid valve

4-way, 3-position, screw-in cartridge, solenoid valve
Up to 13 L/min (3.5 USgpm) • Up to 210 bar (3000 psi)

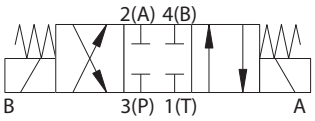

Operation

In the de-energized (center) position, all ports are blocked. When solenoid A is energized, flow is directed from port 3 to port 4 and from port 2 to port 1.

When solenoid B is energized, flow is directed from port 3 to port 2 and from port 4 to port 1.

Features

Hardened, ground and honed working parts to limit leakage. IP69K ToughCoil compatibility. Continuously rated. Compact design with low pressure drop. Rated pressure on all ports.

Sectional view

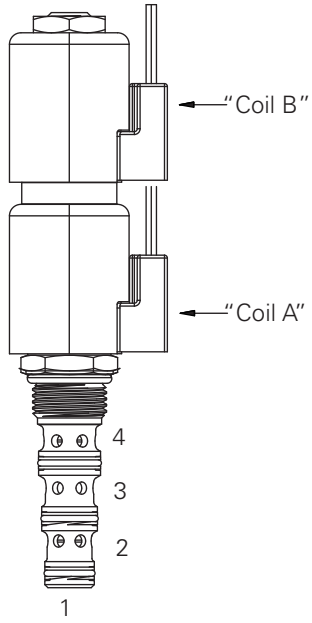

Performance data

Ratings and specifications

Performance data is typical with fluid at 21,8 cST (105 SUS) and 49°C (120°F)	
Typical application pressure (all ports)	210 bar (3000 psi)
Cartridge fatigue pressure (infinite life)	210 bar (3000 psi)
Fatigue pressure	3,000 psi per NFPA/T2-6-1 R2-2000
Rated burst pressure	11,000 psi per NFPA/T2-6-1 R2-2000
Max flow	13.2 L/min (3.5 USgpm)
Temperature range	-40° to 120°C (-40° to 248°F)
Fluids	All general purpose hydraulic fluids such as: MIL-H-5606, SAE 10, SAE 20 etc.
Filtration	Cleanliness code 18/16/13
Standard housing material	Aluminum
Weight including coil	(1.2 lbs)
Seal kit	02-160757 (Buna-N), 02-160758 (Viton®)
Internal leakage	164 cm^3/min (10 in^3/min) max. @ 210 bar (3000 psi)

Viton is a registered trademark of E.I. DuPont
*AC coils must be used with a rectifying connector
Endurance tested to 1 million cycles at full rated flow and pressure.

Description

This is a 4 way 3 position, direct acting, spool type solenoid valve. All ports closed in the de-energized position. This valve is ideal for small flow applications where an actuator needs to be moved in both directions and stopped in any position.

Pressure drop

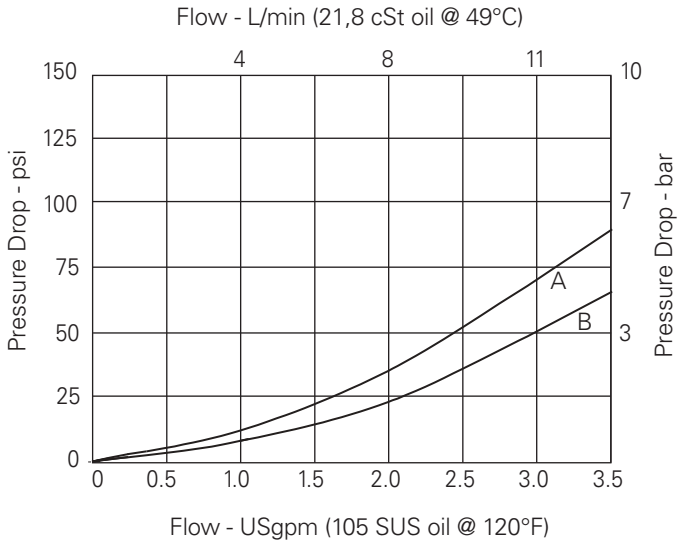

A - Port 3 to port 2 or port 4
B - Port 2 to port 4 or port 1

Where measurements are critical request certified drawings. We reserve the right to change specifications without notice.

SV9-8-F - Solenoid valve

4-way, 3-position, screw-in cartridge, solenoid valve
Up to 13 L/min (3.5 USgpm) • Up to 210 bar (3000 psi)

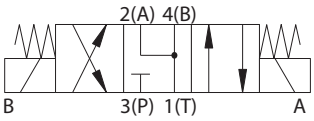

Operation

In the de-energized (center) position, port 1, port 2, and port 4 are open to each other while port 3 is blocked. When solenoid A is energized, flow is directed from port 3 to port 4 and from port 2 to port 1. When solenoid B is energized, flow is directed from port 3 to port 2 and from port 4 to port 1.

Features

Hardened, ground and honed working parts to limit leakage. IP69K ToughCoil compatibility. Continuously rated. Compact design with low pressure drop. Rated pressure on all ports.

Sectional view

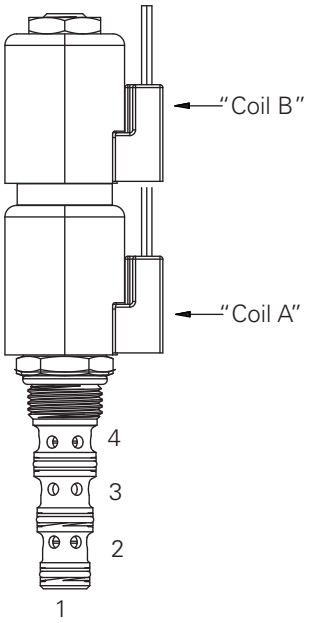

Performance data

Ratings and specifications

Performance data is typical with fluid at 21,8 cST (105 SUS) and 49°C (120°F)	
Typical application pressure (all ports)	210 bar (3000 psi)
Cartridge fatigue pressure (infinite life)	210 bar (3000 psi)
Fatigue pressure	3,000 psi per NFPA/T2-6-1 R2-2000
Rated burst pressure	11,000 psi per NFPA/T2-6-1 R2-2000
Max flow	13.2 L/min (3.5 USgpm)
Temperature range	-40° to 120°C (-40° to 248°F)
Coil duty	Continuous from 85% to 110% of nominal voltage
Coil power	23W
Cavity	C-8-4
Fluids	All general purpose hydraulic fluids such as: MIL-H-5606, SAE 10, SAE 20 etc.
Filtration	Cleanliness code 18/16/13
Standard Housing material	Aluminum
Weight including coil	(1.2 lbs)
Seal kit	02-160757 (Buna-N), 02-160758 (Viton®)
Internal leakage	164 cm^3/min (10 in^3/min) max. @ 210 bar (3000 psi)

Viton is a registered trademark of E.I. DuPont
Endurance tested to 1 million cycles at full rated flow and pressure.

Description

This is a 4 way 3 position, direct acting, spool type solenoid valve. In the de-energized condition Port 2 and 4 are open to tank with the inlet port 3 blocked. This valve is ideal for small flow applications where an actuator needs to be moved in both directions and stopped in any position while allowing the service ports to decay to tank pressure in the de-energized condition.

Pressure drop

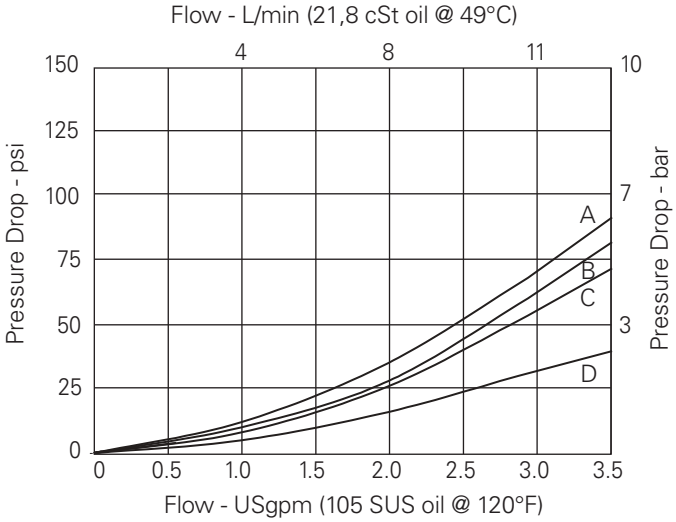

A - Port 4 or port 1 de-energized
B - Port 3 to port 2 or port 4 to port 1
C - Port 2 or port 1 de-energized
D - Port 2 or 1

Where measurements are critical request certified drawings. We reserve the right to change specifications without notice.

SV9-8-B - Solenoid valve

4-way, 3-position, screw-in cartridge, solenoid valve
Up to 13 L/min (3.5 USgpm) • Up to 210 bar (3000 psi)

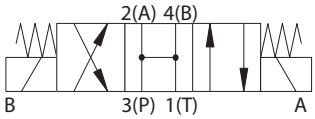

Operation

In the central de-energized position all ports are open. When solenoid 'A' is energized flow is allowed from port 3 to port 4 and port 2 to port 1.

When solenoid 'B' is energized flow is allowed from port 3 to port 2 and from port 4 to port 1.

Features

Hardened, ground and honed working parts to limit leakage. IP69K ToughCoil compatibility. Continuously rated. Compact design with low pressure drop. Rated pressure on all ports.

Sectional view

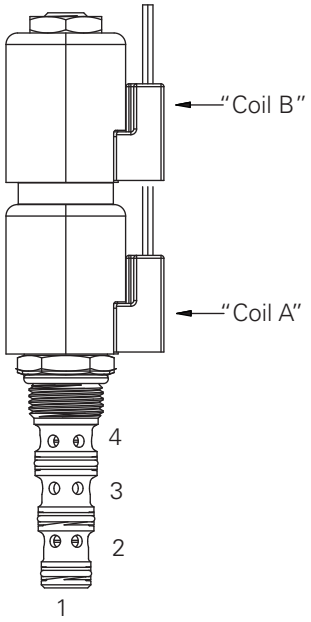

Performance data

Ratings and specifications

Performance data is typical with fluid at 21,8 cST (105 SUS) and 49°C (120°F)	
Typical application pressure (all ports)	210 bar (3000 psi)
Cartridge fatigue pressure (infinite life)	210 bar (3000 psi)
Fatigue pressure	3,000 psi per NFPA/T2-6-1 R2-2000
Rated burst pressure	11,000 psi per NFPA/T2-6-1 R2-2000
Max flow	13.2 L/min (3.5 USgpm)
Temperature range	-40° to 120°C (-40° to 248°F)
Coil duty	Continuous from 85% to 110% of nominal voltage
Coil power	23W
Cavity	C-8-4
Fluids	All general purpose hydraulic fluids such as: MIL-H-5606, SAE 10, SAE 20 etc.
Filtration	Cleanliness code 18/16/13
Standard housing material	Aluminum
Weight including coil	(1.2 lbs)
Seal kit	02-160757 (Buna-N), 02-160758 (Viton®)
Internal leakage	164 cm^3/min (10 in^3/min) max. @ 210 bar (3000 psi)

Viton is a registered trademark of E.I. DuPont
Endurance tested to 1 million cycles at full rated flow and pressure.

Description

This is a 4 way 3 position, direct acting, spool type solenoid valve. In the de-energized condition all ports are open to tank. This valve is ideal for small flow applications where an actuator needs to be moved in both directions.

Pressure drop

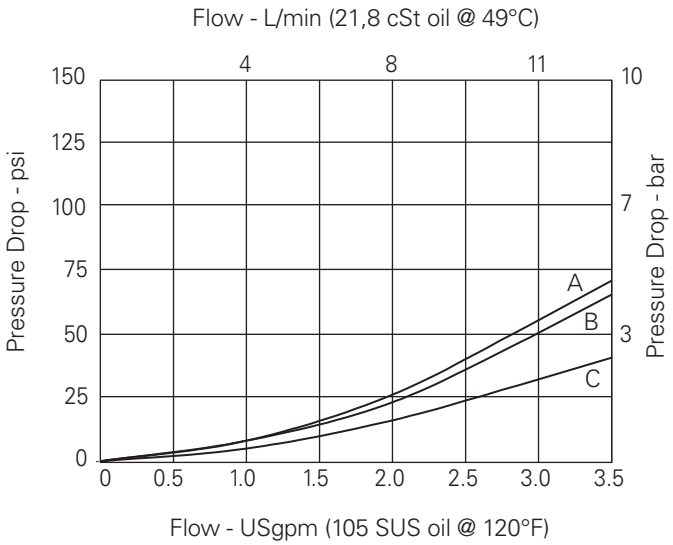

A - Port 4 or port 1 to port 4
Port 3 to port 1 de-energized
B - Port 3 to port 2 or port 4
C - Port 2 or port 1
Port 2 or 4 to 1 de-energized

Where measurements are critical request certified drawings. We reserve the right to change specifications without notice.

SV9-8-A - Solenoid valve

4-way, 3-position, screw-in cartridge, solenoid valve
Up to 13 L/min (3.5 USgpm) • 210 bar (3000 psi)

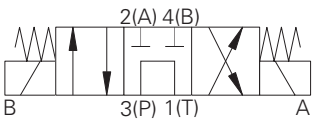

Operation

In the central de-energized position flow is allowed from inlet port 3 to tank port 1 and ports 2 and 4 are blocked

When solenoid 'A' is energized flow is allowed from ports 3 to 4 and ports 2 to 1. When solenoid 'B' is energized flow is allowed from port 3 to port 2 and from port 4 to port 1.

Features

Hardened, ground and honed working parts to limit leakage. IP69K Tough coil compatibility. Continuously rated. Compact design with low pressure drop. Rated pressure on all ports.

Sectional view

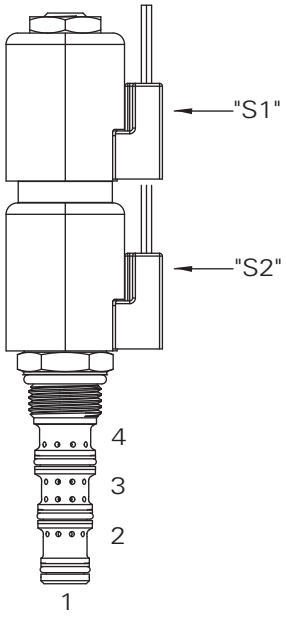

Performance data

Ratings and specifications

Performance data is typical with fluid at 21,8 cST (105 SUS) and 49°C (120°F)	
Typical application pressure (all ports)	210 bar (3000 psi)
Cartridge fatigue pressure (infinite life)	210 bar (3000 psi)
Fatigue pressure	3,000 psi per NFPA/T2-6-1 R2-2000
Rated burst pressure	11,000 psi per NFPA/T2-6-1 R2-2000
Max flow	13.2 L/min (3.5 USgpm)
Temperature range	-40° to 120°C (-40° to 248°F)
Coil duty	Continuous from 85% to 110% of nominal voltage
Coil power	23W
Cavity	C-8-4
Fluids	All general purpose hydraulic fluids such as: MIL-H-5606, SAE 10, SAE 20 etc.
Filtration	Cleanliness code 18/16/13
Standard housing material	Aluminum
Weight including coil	(1.2 lbs)
Seal kit	02-160757 (Buna-N), 02-160758 (Viton®)
Internal leakage	164 cm^3/min (10 in^3/min) max. @ 210 bar (3000 psi)

Viton is a registered trademark of E.I. DuPont
*AC coils must be used with a rectifying connector
Endurance tested to 1 million cycles at full rated flow and pressure.

Description

This is a 4 way 3 position, direct acting, spool type solenoid valve. In the de-energized condition the inlet Port 3 is open to tank with port 2 and 4 blocked. This valve is ideal for small flow applications where an actuator needs to be moved in both directions. In the de-energized condition inlet flow is allowed to tank.

Pressure drop

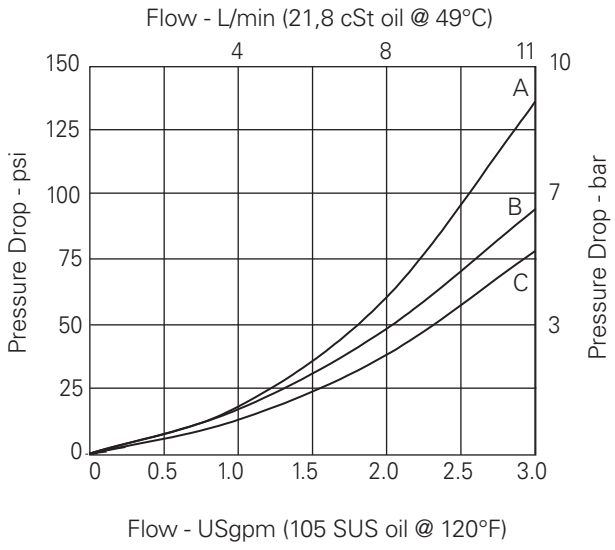

A - Port 3 or port 2 or port 4
B - Port 3 to port 1 de-energized
C - Port 2 or port 4 to port 1

Where measurements are critical request certified drawings. We reserve the right to change specifications without notice.

SV9-8 - Solenoid valve

4-way, 3-position, screw-in cartridge, solenoid valve
Up to 13 L/min (3.5 USgpm) • Up to 210 bar (3000 psi)

Model code

SV9	–	8	*	–	*	*	–	*	**	–	****	*	P	00	–	00
1		2	3		4	5		6	7		8	9	10	11		12

1 Function
SV9 - Solenoid valve

2 Size
8 - 8 size

3 Seal material
N - Buna-N
V - Viton

5 Manual override option
0 - No manual override
M - Manual override

For valve dimensions with manual override, see pages A980.

6 Housing Material
0 - Cartridge only
A - Aluminum
S - Steel

4 Spool center condition

A

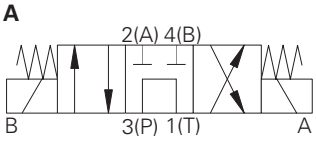

B

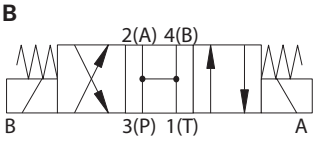

E

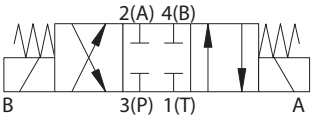

F

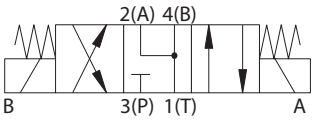

7 Port sizes

Code	Port size	Housing number	
		Aluminium	Steel
0	Cartridge only		
2G	1/4" BSPP	02-160747	02-160753
3G	3/8" BSPP	02-160748	02-160754
4T	SAE 4	02-160749	02-160751
6T	SAE 6	02-160750	02-160752

See section J for housing details.

8 Voltage rating [1]
000 - No coil
012D - 12VDC
024D - 24VDC
036D - 36VDC
012B - 12VDC/w diode*
024B - 24VDC/w diode*

*Optional arc suppression diode.

9 Connector types [1]
0 - No coil
G - ISO 4400 DIN 43650
Q - Spade terminals
N - Deutsch male
W - Leadwire
C - Deutch on Leads
H - Metripak 150 on Leads
F - Weatherpak Male on Leads
Y - Amp JR (DC only)
D - Metripack 150 male (DC only)
J - Metripack 280 male (DC only)

10 Coil series [1]
0 - No Coil
P - 8 series, 23W

11 Coil special features [1]
00 - None

12 Valve Special features [1]
00 - None

(Only required if valve has Special features omitted if "00".)

[1] These model digits are not stamped on the valve.

Where measurements are critical request certified drawings. We reserve the right to change specifications without notice.

SV9-8 - Solenoid valve

4-way, 3-position, screw-in cartridge, solenoid valve
Up to 13 L/min (3.5 USgpm) • 210 bar (3000 psi)

Dimensions

mm (inch)

Torque cartridge in aluminum or steel housing 34-41 Nm (25-30 ft. lbs.)

Valve is shown with "W" coil. See other coils in Section C.

Note: When solenoid valve is ordered as Cartridge only, coil nut and coil spacer included.

When solenoid valve is ordered without coils, it will be supplied with coil spacer and coil nut.

This valve uses the P series, 8 size, 23 W coil.

Spare Parts

Coil Nut	565558
Coil Spacer	02-186730

⚠ Warning

Maintain 5-8 Nm (4-6 ft lbs) maximum torque on valve tube nut.

Over tightening may cause valve failure.

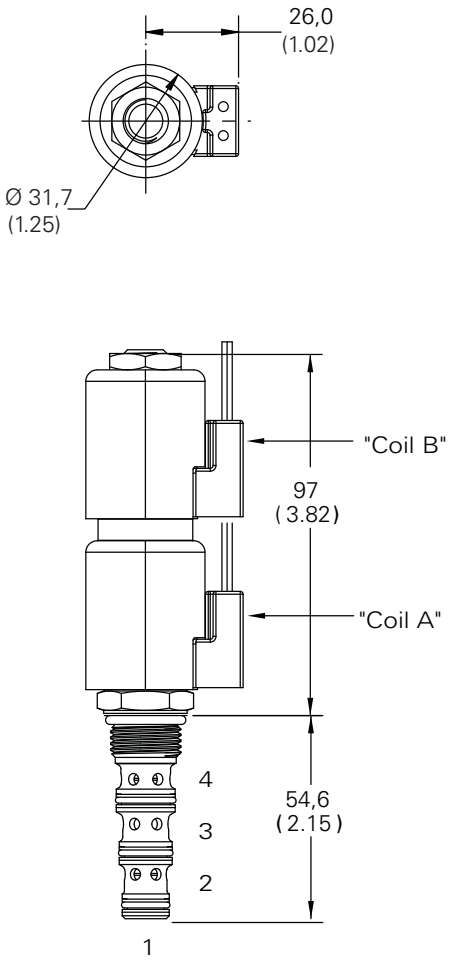

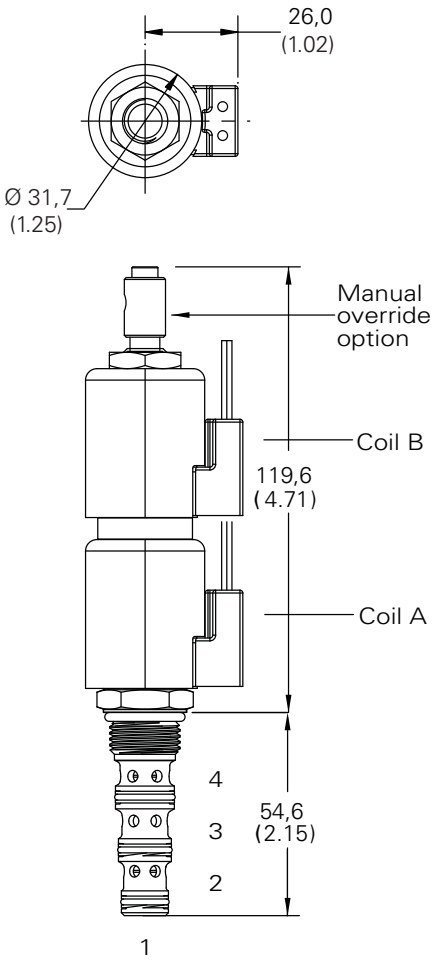

Where measurements are critical request certified drawings. We reserve the right to change specifications without notice.

SV9-10-A - Solenoid valve

4-way, 3-position spool type solenoid valve
Up to 19 L/min (5 USgpm) • 210 bar (3000 psi)

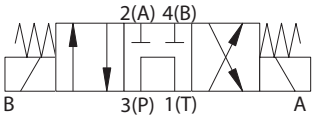

Operation

In the de-energized position, this valve allows flow from port 3 to port 1 and blocks ports 2 and 4. When solenoid 1 (S1) is energized, flow is directed from port 3 to port 2 and from port 4 to port 1.

When solenoid 2 (S2) is energized, flow is directed from port 3 to port 4 and from port 2 to port 1.

Sectional view

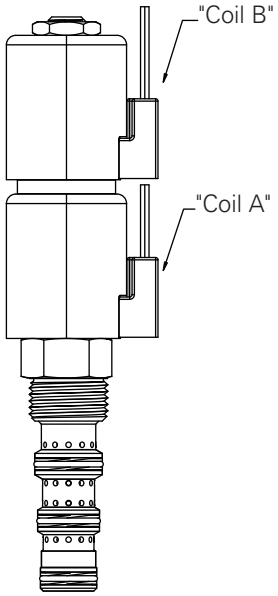

Performance data

Ratings and specifications

Performance data is typical with fluid at 21,8 cST (105 SUS) and 49°C (120°F)	
Typical application pressure (all ports)	210 bar (3000 psi)
Cartridge fatigue pressure (infinite life)	210 bar (3000 psi)
Fatigue pressure	3,000 psi per NFPA/T2-6-1 R2-2000
Rated burst pressure	(626 bar) 9090 psi per NFPA/T2-6-1 R2-2000
Max flow	5 USgpm
Temperature range	-40° to 120°C (-40° to 248°F)
Coil duty	Continuous from 85% to 110% of nominal voltage
Coil power	23W
Cavity	C-10-4
Fluids	All general purpose hydraulic fluids such as: MIL-H-5606, SAE 10, SAE 20 etc.
Filtration	Cleanliness code 18/16/13
Housing material (standard)	Aluminum
Weight including coil	0.95Kg (2.1 lbs)
Seal kit	889625 (Buna-N), 566080 (Viton®)
Internal leakage	246 cm^3/min (15 in^3/min) max. @ 210 bar (3000 psi)

Viton is a registered trademark of E.I. DuPont
Endurance tested to 1 million cycles at full rated flow and pressure.

Description

The SV9-10-B is a 4-way, 3-position, direct acting, spool type directional valve.

Pressure drop

Cartridge only

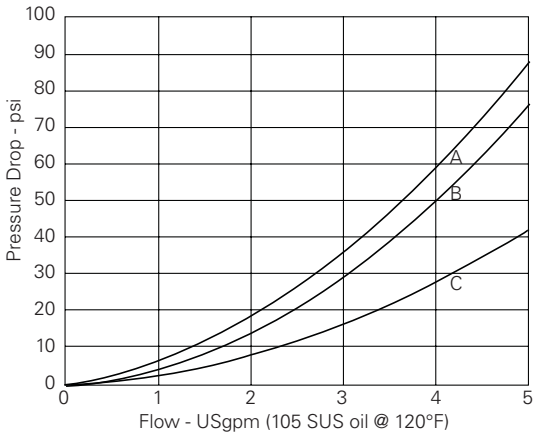

A - Port 3 to port 1, de-energized
B - Port 3 to port 2, port 3 to port 4
C - Port 2 to port 1, port 4 to port 1

Where measurements are critical request certified drawings. We reserve the right to change specifications without notice.

SV9-10-B - Solenoid valve

4-way, 3-position spool type solenoid valve
Up to 23 L/min (6 USgpm) • 210 bar (3000 psi)

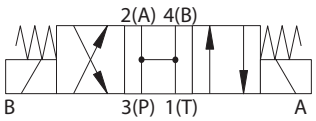

Operation

In the de-energized position, all ports are open to each other When solenoid 1 (S1) is energized, flow is directed from port 3 to port 4 and from port 2 to port 1.

When solenoid 2 (S2) is energized, flow is directed from port 3 to port 2 and from port 4 to port 1.

Sectional view

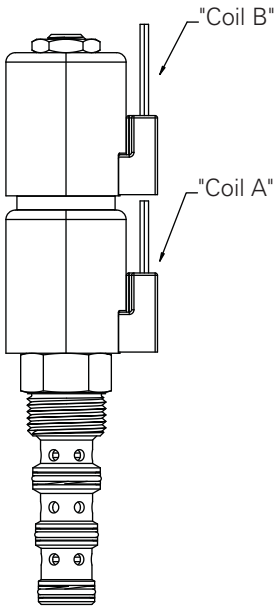

Performance data

Ratings and specifications

Performance data is typical with fluid at 21,8 cST (105 SUS) and 49°C (120°F)	
Typical application pressure (all ports)	210 bar (3000 psi)
Cartridge fatigue pressure (infinite life)	210 bar (3000 psi)
Fatigue pressure	3,000 psi per NFPA/T2-6-1 R2-2000
Rated burst pressure	(626 bar) 9090 psi per NFPA/T2-6-1 R2-2000
Max flow	6 USgpm
Temperature range	-40° to 120°C (-40° to 248°F)
Coil duty	Continuous from 85% to 110% of nominal voltage
Coil power	26W
Cavity	C-10-4
Fluids	All general purpose hydraulic fluids such as: MIL-H-5606, SAE 10, SAE 20 etc.
Filtration	Cleanliness code 18/16/13
Housing material (standard)	Aluminum
Weight including coil	0.95 Kg (2.1 lbs)
Seal kit	889625 Buna-N, 566080 (Viton®)
Internal leakage	246 cm^3/min (15 in^3/min) max. @ 210 bar (3000 psi)

Viton is a registered trademark of E.I. DuPont
Endurance tested to 1 million cycles at full rated flow and pressure.

Description

The SV9-10-B is a 4-way, 3-position, direct acting, spool type directional valve.

Pressure drop

Cartridge only

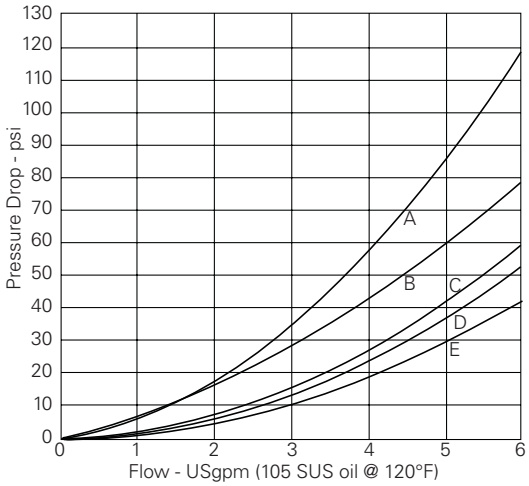

A - Port 3 to port 1, de-energized
B - Port 3 to port 2, port 3 to port 4
C - Port 4 to port 1, port 2 to port 1, de-energized
D - Port 2 to port 1
B - Port 4 to port 1

Where measurements are critical request certified drawings. We reserve the right to change specifications without notice.

SV9-10-E - Solenoid valve

4-way, 3-position spool type solenoid valve
Up to 23 L/min (6 USgpm) • 210 bar (3000 psi)

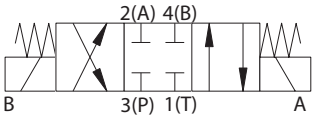

Operation

In the de-energized (center) position, all ports are blocked. When solenoid 1 (S1) is energized, flow is directed from port 3 to port 4 and from port 2 to port 1.

When solenoid 2 (S2) is energized, flow is directed from port 3 to port 2 and from port 4 to port 1.

Sectional view

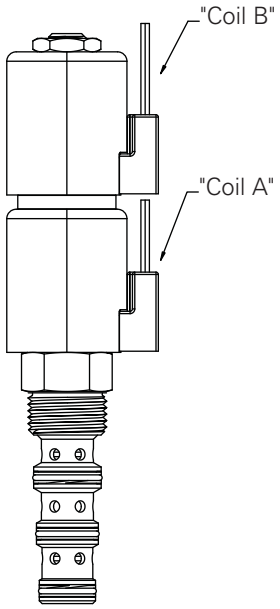

Performance data

Ratings and specifications

Performance data is typical with fluid at 21,8 cST (105 SUS) and 49°C (120°F)	
Typical application pressure (all ports)	210 bar (3000 psi)
Cartridge fatigue pressure (infinite life)	210 bar (3000 psi)
Fatigue pressure	3,000 psi per NFPA/T2-6-1 R2-2000
Rated burst pressure	(626 bar) 9090 psi per NFPA/T2-6-1 R2-2000
Max flow	6 USgpm
Temperature range	-40° to 120°C (-40° to 248°F)
Coil duty	Continuous from 85% to 110% of nominal voltage
Coil power	26W
Cavity	C-10-4
Fluids	All general purpose hydraulic fluids such as: MIL-H-5606, SAE 10, SAE 20 etc.
Filtration	Cleanliness code 18/16/13
Housing material (standard)	Aluminum
Weight including coil	0.95 Kg (2.1 lbs)
Seal kit	889625 (Buna-N), 566080 (Viton®)
Internal leakage	246 cm^3/min (15 in^3/min) max. @ 210 bar (3000 psi)

Viton is a registered trademark of E.I. DuPont
Endurance tested to 1 million cycles at full rated flow and pressure.

Description

The SV9-10-E is a 4-way, 3-position, direct acting, spool type directional valve.

Pressure drop

Cartridge only

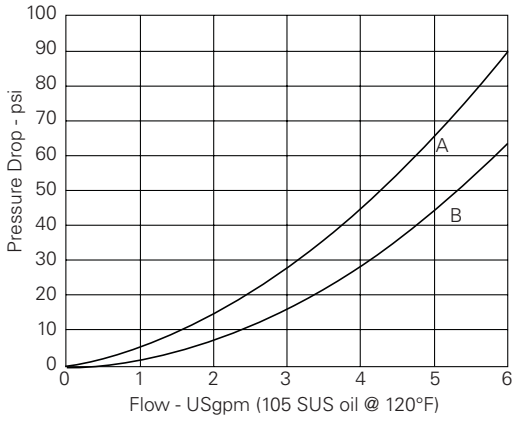

A - Port 3 to port 2, port 3 to port 4

B - Port 2 to port 1, port 4 to port 1

Where measurements are critical request certified drawings. We reserve the right to change specifications without notice.

SV9-10-F - Solenoid valve

4-way, 3-position spool type solenoid valve
Up to 23 L/min (6 USgpm) • 210 bar (3000 psi)

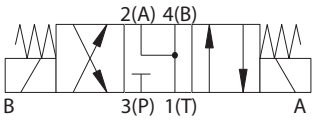

Operation

In the de-energized (center) position, port 1, port 2, and port 4 are open to each other while port 3 is blocked. When solenoid 1 (S1) is energized, flow is directed from port 3 to port 4 and from port 2 to port 1. When solenoid 2 (S2) is energized, flow is directed from port 3 to port 2 and from port 4 to port 1.

Sectional view

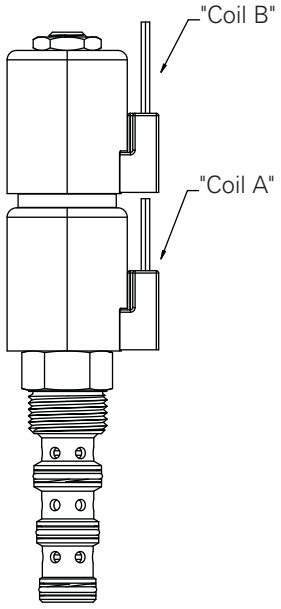

Performance data

Ratings and specifications

Performance data is typical with fluid at 21,8 cST (105 SUS) and 49°C (120°F)	
Typical application pressure (all ports)	210 bar (3000 psi)
Cartridge fatigue pressure (infinite life)	210 bar (3000 psi)
Fatigue pressure	3,000 psi per NFPA/T2-6-1 R2-2000
Rated burst pressure	(626 bar) 9090 psi per NFPA/T2-6-1 R2-2000
Max flow	6 USgpm
Temperature range	-40° to 120°C (-40° to 248°F)
Coil duty	Continuous from 85% to 110% of nominal voltage
Coil power	26W
Cavity	C-10-4
Fluids	All general purpose hydraulic fluids such as: MIL-H-5606, SAE 10, SAE 20 etc.
Filtration	Cleanliness code 18/16/13
Housing material (standard)	Aluminum
Weight including coil	0.95 Kg (2.1 lbs)
Seal kit	889625 (Buna-N), 566080 (Viton®)
Internal leakage	246 cm ^{3}/min (15 in ^{3}/min) max. @ 210 bar (3000 psi)

Viton is a registered trademark of E.I. DuPont
Endurance tested to 1 million cycles at full rated flow and pressure.

Description

The SV9-10-F is a 4-way, 3-position, direct acting, spool type directional valve.

Pressure drop

Cartridge only

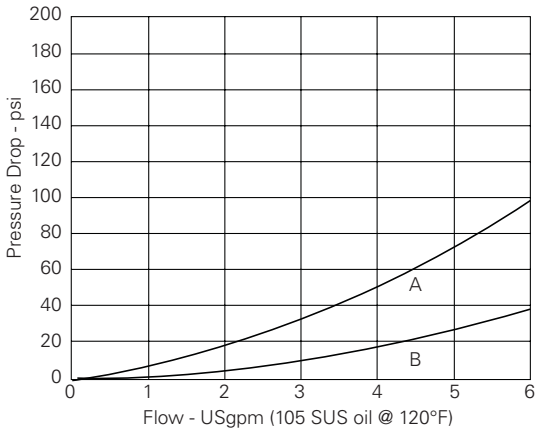

A - Port 3 to port 2, port 3 to port 4

B - Port 2 to port 1, port 4 to port 1

Where measurements are critical request certified drawings. We reserve the right to change specifications without notice.

SV9-10 - Solenoid valve

4-way, 3-position spool type solenoid valve
Up to 23 L/min (6 USgpm) • 210 bar (3000 psi)

Model code

SV9	–	10	*	–	*	*	–	*	**	–	****	*	J	00	–	00
1		2	3		4	5		6	7		8	9	10	11		12

1 Function
SV9 - Solenoid valve

2 Size
10 - 10 size

3 Seal material
Blank - Buna-N
V - Viton

5 Manual override option
Blank - No manual override
M - Manual override

6 Housing material
0 - Cartridge only
A - Aluminum
S - Steel

4 Spool center condition

A

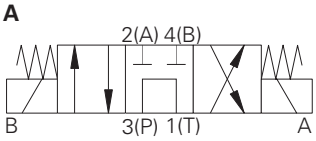

B

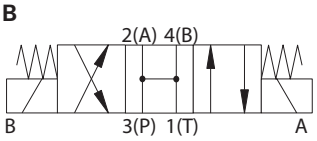

E

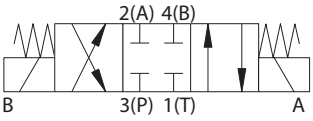

F

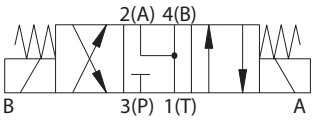

7 Port sizes

Code	Port size	Housing number	
		Aluminium light duty	Aluminium fatigue rated
Blank		Cartridge only	
3B	3/8" BSPP	02-179705	
2G	1/4" BSPP		876709
3G	3/8" BSPP		876715
6H	SAE 4		876708
8H	SAE 6		876713
6T	SAE 6	566161	

See section J for housings.

8 Voltage rating [1]
00 - No coil
012D - 12VDC
024D - 24VDC
036D - 36VDC
024A - 24VAC
115A - 115VAC
230A - 230VAC
012B - 12VDC/w diode*
024B - 24VDC/w diode*
*Optional arc suppression diode.

9 Connector types [1]
Blank - No coil
G - ISO 4400 DIN 43650
Q - Spade terminals
W - Leadwire
N - Deutsch (DC only)
Y - Amp JR (DC only)
D - Metripack 150 male (DC only)
J - Metripack 280 male (DC only)

10 Coil series [1]
Blank - No Coil
J - 10 series, 23W

11 Coil special features [1]
Blank - None

12 Valve Special features [1]
00 - None
(Only required if valve has Special features omitted if "00".)

[1] These model digits are not stamped on the valve.

Where measurements are critical request certified drawings. We reserve the right to change specifications without notice.

Dimensions

mm (inch)

Torque cartridge in aluminum or steel housing 34-41 Nm (25-30 ft. lbs.)

Valve is shown with "W" coil. See other coils in Section C.

Note: When solenoid valve is ordered as Cartridge only, coil nut is included.

When solenoid valve is ordered without coils, it will be supplied with only the nut. The spacer must be ordered separately.

This valve uses the J series, 23 W coil.

Spare parts

Coil nut	565558
Coil spacer	02-179226

⚠ Warning

Maintain 5-8 Nm (4-6 ft. lbs) maximum torque on valve tube nut. Over tightening may cause valve failure.

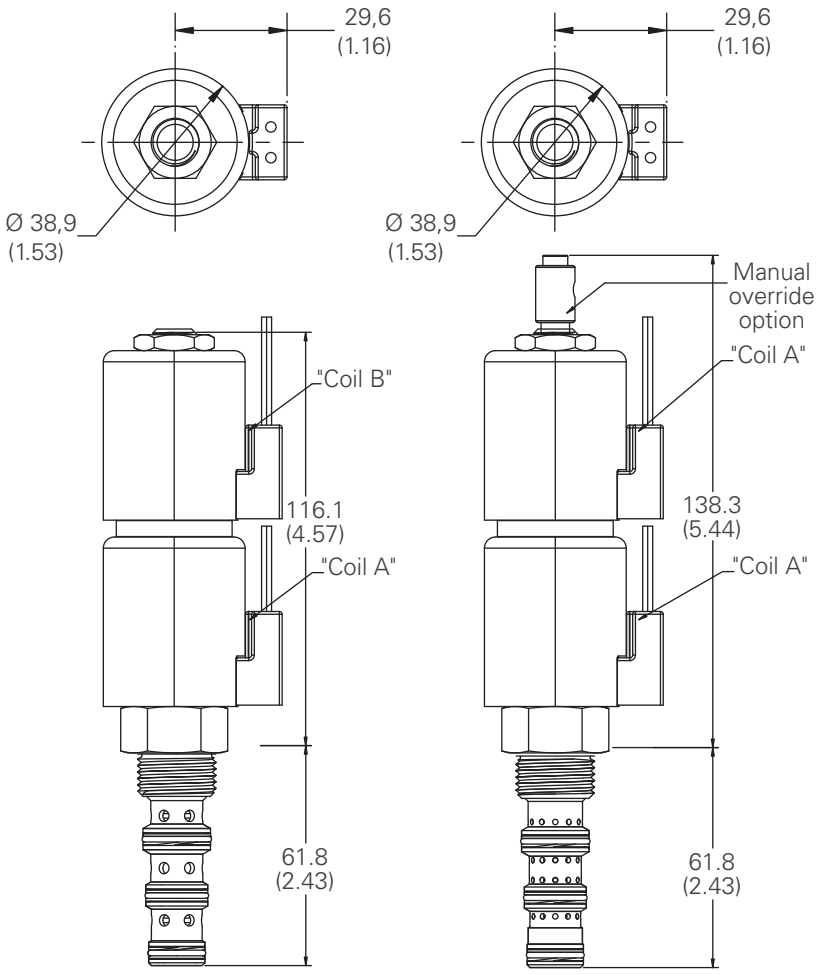

Where measurements are critical request certified drawings. We reserve the right to change specifications without notice.

SV9M-10-E - Solenoid valve

4-way, 3-position spool type solenoid valve
Up to 25 L/min (6.5 USgpm) • 210 bar (3000 psi)

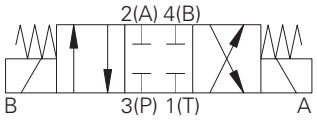

Operation

In the de-energized position all ports are closed. When solenoid 'A' is energized flow is allowed from port 3 to port 4 and port 2 to port 1.

When solenoid 'B' is energized flow is allowed from port 3 to port 2 and from port 4 to port 1.

Features

Hardened, ground and honed working parts to limit leakage. IP69K Large ToughCoil compatibility. Continuously rated. Compact design with low pressure drop. Rated pressure on all ports.

Sectional view

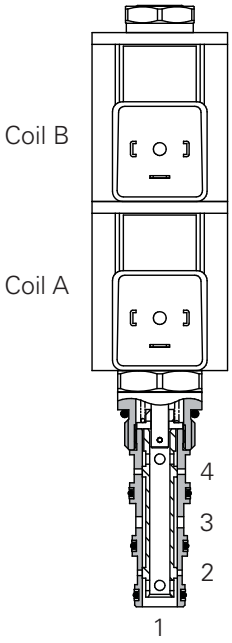

Performance data

Ratings and specifications

Figures based on Viscosity 32 cST (150 SSU)	
Max working pressure	210 bar (3000 psi)
Rated flow	See performance graphs
Nominal flow	25 L/min (6.5 USgpm)
Internal leakage	Less than 120 ml/min past each land 210 bar differential
Temperature range	-30° to +120°C (-22° to +248°F)
Cavity	C-10-4 (See Section M)
Electrical data	See coil data sheet
Torque cartridge into cavity	30 Nm (22 lbs ft)
Mounting position	Unrestricted
Fluids	All general purpose hydraulic fluids such as MIL-H-5606, SAE 10, SAE 20 etc
Seal material	Viton® with PTFE back up rings
Filtration	BS5540/4 Class 18/13 (25 micron or better)
Nominal viscosity range	15 to 250 cSt
Standard housing materials	Aluminium alloy
Coil weight	0.3 kg (0.6 lbs) two per valve
Cartridge weight	0.25 kg (0.55 lbs)
Seal kit	SK1034 (Nitrile) SK1034V (Viton)

Viton is a registered trademark of E.I. DuPont
*AC coils must be used with a rectifying connector

Description

This is a 4 way 3 position, direct acting, spool type solenoid valve. All ports closed in the de-energized position. This valve is ideal for small flow applications where an actuator needs to be moved in both directions and stopped in any position.

Pressure drop

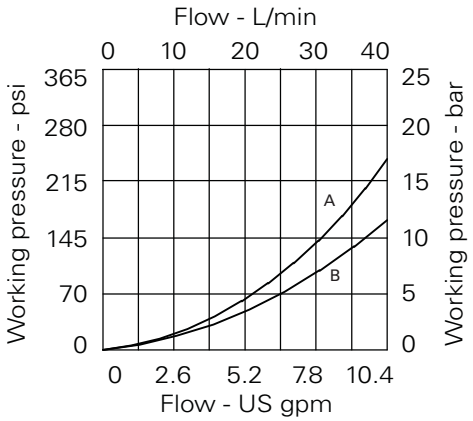

A - Port 3 to port 2 or port 4
B - Port 2 to port 4 or port 1

Where measurements are critical request certified drawings. We reserve the right to change specifications without notice.

SV9M-10-F - Solenoid valve

4-way, 3-position spool type solenoid valve
Up to 25 L/min (6.5 USgpm) • 210 bar (3000 psi)

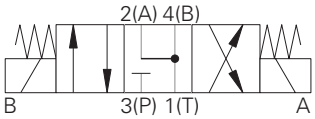

Operation

In the de-energized (center) position, port 1, port 2, and port 4 are open to each other while port 3 is blocked. When solenoid A is energized, flow is directed from port 3 to port 4 and from port 2 to port 1. When solenoid B is energized, flow is directed from port 3 to port 2 and from port 4 to port 1.

Features

Hardened, ground and honed working parts to limit leakage. IP69K Large ToughCoil compatibility. Continuously rated. Compact design with low pressure drop. Rated pressure on all ports.

Sectional view

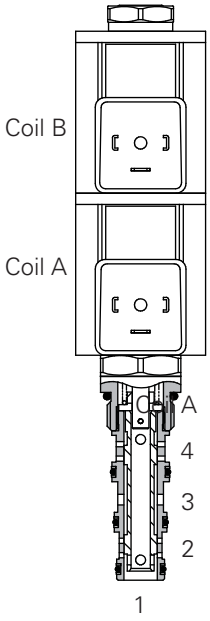

Performance data

Ratings and specifications

Figures based on Viscosity 32 cST (150 SSU)	
Max working pressure	210 bar (3000 psi)
Rated flow	See performance graph
Nominal flow	25 L/min (6.5 USgpm)
Internal leakage	Less than 120 ml/min past each land 210 bar differential
Temperature range	-30° to +120°C (-22° to +248°F)
Cavity	C-10-4 (See Section M)
Electrical data	See coil data sheet
Torque cartridge into cavity	30 Nm (22 lbs ft)
Mounting position	Unrestricted
Fluids	All general purpose hydraulic fluids such as MIL-H-5606, SAE 10, SAE 20 etc
Seal material	Standard nitrile with PTFE back – up rings
Filtration	BS5540/4 Class 18/13 (25 micron or better)
Nominal viscosity range	15 to 250 cSt
Standard housing materials	Aluminium alloy
Coil weight	0.3 kg (0.6 lbs) two per valve
Cartridge weight	0.25 kg (0.55 lbs)
Seal kit	SK1034 (Nitrile) SK1034V (Viton)

Viton is a registered trademark of E.I. DuPont

Description

This is a 4 way 3 position, direct acting, spool type solenoid valve. In the de-energized condition Port 2 and 4 are open to tank with the inlet port 3 blocked. This valve is ideal for small flow applications where an actuator needs to be moved in both directions and stopped in any position while allowing the service ports to decay to tank pressure in the de-energized condition.

Pressure drop

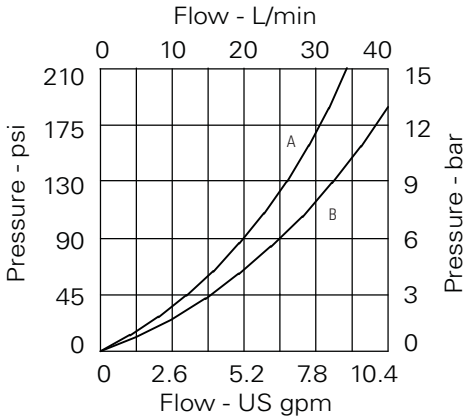

A - Spool shifted port 3-2, port 3-4 and port 2-1 and port 4-1

B - Spool centered port 3-2, port 3-4 and port 2-1 and port 4-1

Where measurements are critical request certified drawings. We reserve the right to change specifications without notice.

SV9M-10-B - Solenoid valve

4-way, 3-position spool type solenoid valve
Up to 34 L/min (8.9 USgpm) • 210 bar (3000 psi)

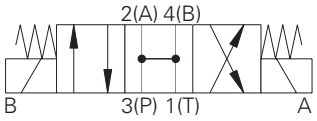

Operation

In the de-energized position all ports are open. When solenoid 'A' is energized flow is allowed from port 3 to port 4 and port 2 to port 1.

When solenoid 'B' is energized flow is allowed from port 3 to port 2 and from port 4 to port 1.

Features

Hardened, ground and honed working parts to limit leakage. IP69K Large ToughCoil compatibility. Continuously rated. Compact design with low pressure drop. Rated pressure on all ports.

Sectional view

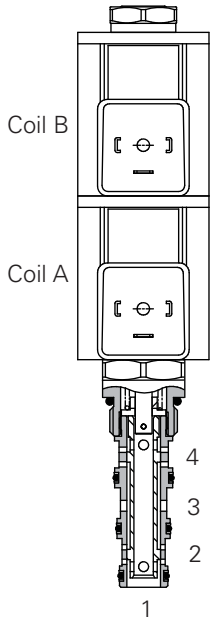

Performance data

Ratings and specifications

Figures based on Viscosity 32 cST (150 SSU)	
Max working pressure	210 bar (3000 psi)
Rated flow	See performance graphs
Nominal flow	34 L/min (8.9 USgpm)
Internal leakage	Less than 120 ml/min past each land 210 bar differential
Temperature range	-30° to +120°C (-22° to +248°F)
Cavity	C-10-4 (See Section M)
Electrical data	See coil data sheet
Torque cartridge into cavity	30 Nm (22 lbs ft)
Mounting position	Unrestricted
Fluids	All general purpose hydraulic fluids such as MIL-H-5606, SAE 10, SAE 20 etc
Seal material	Standard nitrile with PTFE back up rings
Filtration	BS5540/4 Class 18/13 (25 micron or better)
Nominal viscosity range	15 to 250 cSt
Standard housing materials	Aluminium alloy
Coil weight	0.3 kg (0.6 lbs) two per valve
Cartridge weight	0.25 kg (0.55 lbs)
Seal kit	SK1034 (Nitrile) SK1034V (Viton)

Viton is a registered trademark of E.I. DuPont

Description

This is a 4 way 3 position, direct acting, spool type solenoid valve. In the de-energized condition all ports are open to tank. This valve is ideal for small flow applications where an actuator needs to be moved in both directions.

Pressure drop

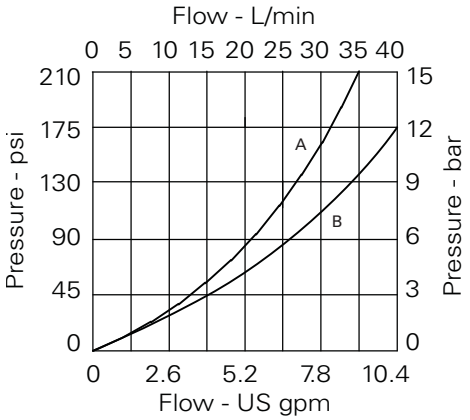

A - Spool shifted port 3-2, port 3-4 and port 2-1 and port 4-1

B - Spool centered port 2 -1 and port 4-1

Where measurements are critical request certified drawings. We reserve the right to change specifications without notice.

SV9M-10-A - Solenoid valve

4-way, 3-position spool type solenoid valve
Up to 25 L/min (6.5 USgpm) • 210 bar (3000 psi)

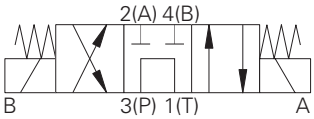

Operation

In the central de-energized position. Flow is allowed from inlet port 3 to port 1 and ports 2 and 4 are blocked. When solenoid 'B' is energized flow is allowed from port 3 to 4 and port 2 to 1.

When solenoid 'A' is energized flow is allowed from port 3 to port 2 and from port 4 to port 1.

Features

Hardened, ground and honed working parts to limit leakage. IP69K Large ToughCoil compatibility. Continuously rated. Compact design with low pressure drop. Rated pressure on all ports.

Sectional view

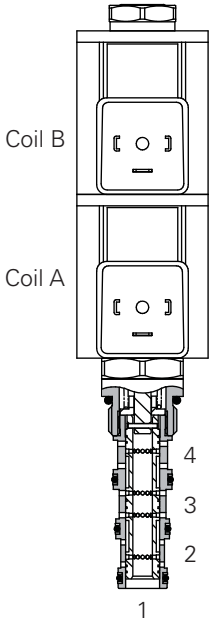

Performance data

Ratings and specifications

Figures based on Viscosity 32 cST (150 SSU)	
Max working pressure	210 bar (3000 psi)
Rated flow	See performance graph
Nominal flow	25 L/min (6.5 USgpm)
Internal leakage	Less than 120 ml/min past each land 210 bar differential
Temperature range	-30° to +120°C (-22° to +248°F)
Cavity	C-10-4 (See Section M)
Electrical data	See coil data sheet
Torque cartridge into cavity	30 Nm (22 lbs ft)
Mounting position	Unrestricted
Fluids	All general purpose hydraulic fluids such as MIL-H-5606, SAE 10, SAE 20 etc
Seal material	Standard nitrile with PTFE back up rings
Filtration	BS5540/4 Class 18/13 (25 micron or better)
Nominal viscosity range	15 to 250 cSt
Standard housing materials	Aluminium alloy
Coil weight	0.3 kg (0.6 lbs) two per valve
Cartridge weight	0.25 kg (0.55 lbs)
Seal kit	SK1034 (Nitrile) SK1034V (Viton)

Viton is a registered trademark of E.I. DuPont

Description

This is a 4 way 3 position, direct acting, spool type solenoid valve. In the de-energized condition the inlet Port 3 is open to tank with port 2 and 4 blocked. This valve is ideal for small flow applications where an actuator needs to be moved in both directions. In the de-energized condition inlet flow is allowed to tank.

Pressure drop

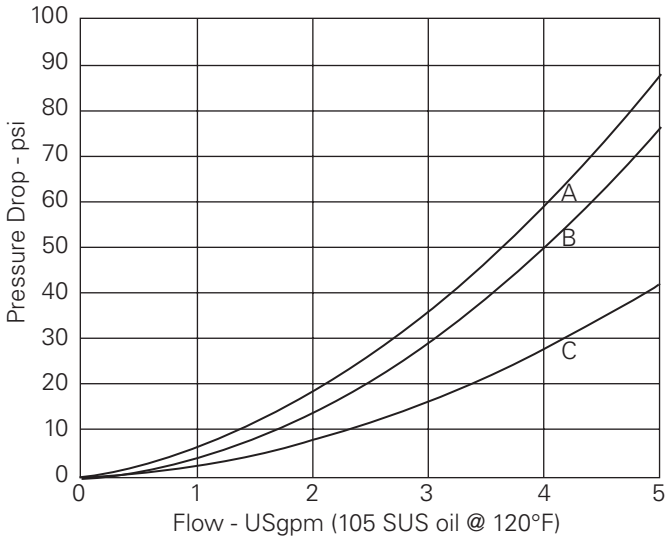

A - Port 3 to port 1, de-energized
B - Port 3 to port 2, port 3 to port 4
C - Port 2 to port 1, port 4 to port 1

Where measurements are critical request certified drawings. We reserve the right to change specifications without notice.

SV9M-10 - Solenoid valve

4-way, 3-position spool type solenoid valve
Up to 32 L/min (8.5 USgpm) • 210 bar (3000 psi)

Dimensions

mm (inch)

Note: When solenoid valve is ordered as cartridge Coil nut is included.

Torque cartridge in Aluminum or steel housing 43 - 46 Nm (32 - 34 ft lbs).

Torque Coil Nut Torque 5-7 Nm (4 - 5 ft lbs)

When solenoid valve is ordered without coils, it will be supplied with the nut.

This valve uses the L series, 30W coil.

Spare parts

Coil nut	6025028-001

Cartridge only

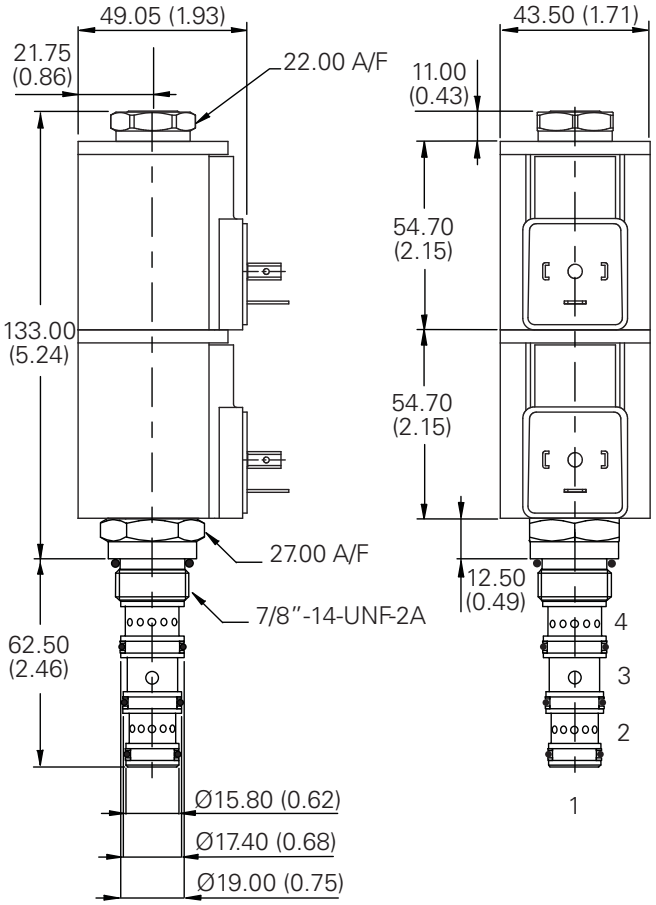

Installation drawing (Steel)

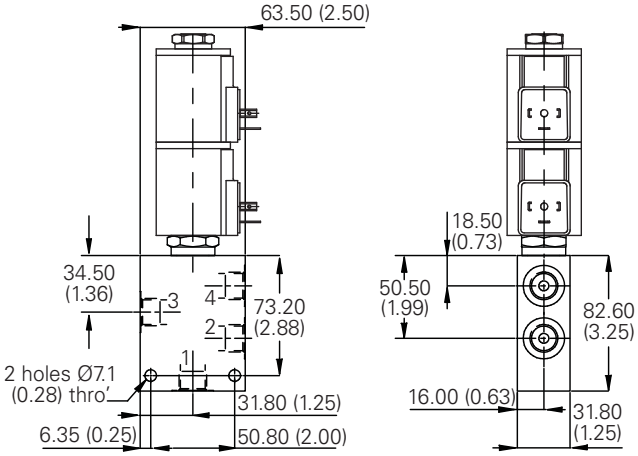

Where measurements are critical request certified drawings. We reserve the right to change specifications without notice.

SV9M-10 - Solenoid valve

4-way, 3-position spool type solenoid valve
Up to 32 L/min (8.5 USgpm) • 210 bar (3000 psi)

Model code

SV9A	–	10	*	–	*	*	–	*	**	–	****	*	L	00	–	00
1		2	3		4	5		6	7		8	9	10	11		12

1 Function
SV9M - Solenoid valve

2 Size
10 - 10 size

3 Seal material
N - Buna-N
V - Viton

5 Manual override option
0 - No manual override
M - Manual override

For valve dimensions with manual override, see pages A-961.

6 Housing material
0 - Cartridge only
A - Aluminum

4 Spool center condition

A

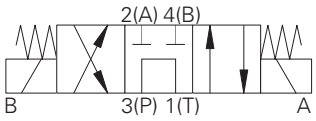

B

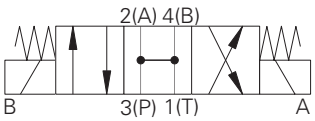

E

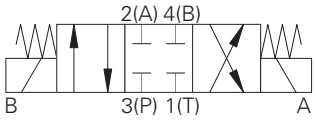

F

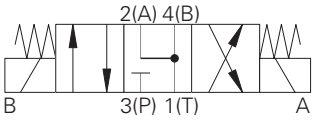

7 Port sizes

Code	Port size	Housing number
		Aluminium
0	Cartridge only	
3G	3/8" BSP	B19240
4G	1/2" BSP	B19228
8T	1/2" SAE	B19229

8 Voltage rating[1]
000 - No coil
012D - 12VDC
024D - 24VDC
036D - 36VDC
012B - 12VDC/w diode*
024B - 24VDC/w diode*
*Optional arc suppression diode.

9 Connector types[1]
0 - No coil
W - Leadwire
N - Deutsch male, DT04-2P, integrated

10 Coil series[1]
0 - No Coil
L - 10 series, 28W Large ToughCoil

11 Coil special features[1]
00 - None

12 Valve special features[1]
00 - None

[1] These model digits are not stamped on the valve.

Where measurements are critical request certified drawings. We reserve the right to change specifications without notice.

S Series - Manual overrides

13 mm Tube

A

S2 Series

Consult factory for availability

Screw, normally closed manual override - type 2

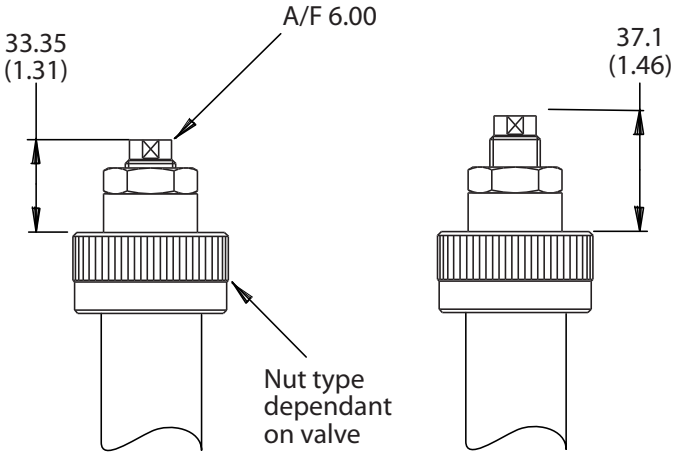

Manually operated position Normal position

Available for S217, S229

Push manual override - type 3

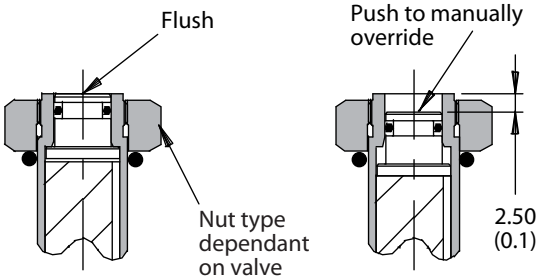

Push to manually override

Available for S217

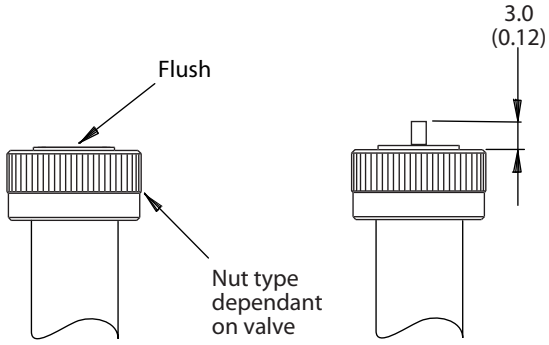

Push to manually override

Available for S229

Where measurements are critical request certified drawings. We reserve the right to change specifications without notice.

S5 Series

Consult factory for availability

Screw manual override - Type 2

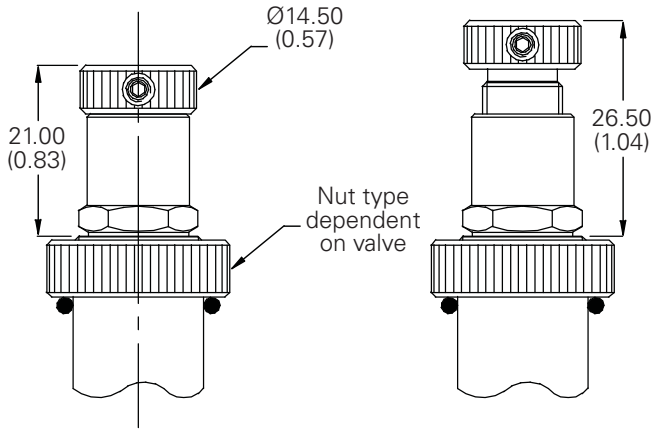

Manually operated position
Available for: S520, S521, S525, S526, S541, S542

Normal position

Push/pull manual override - Type M

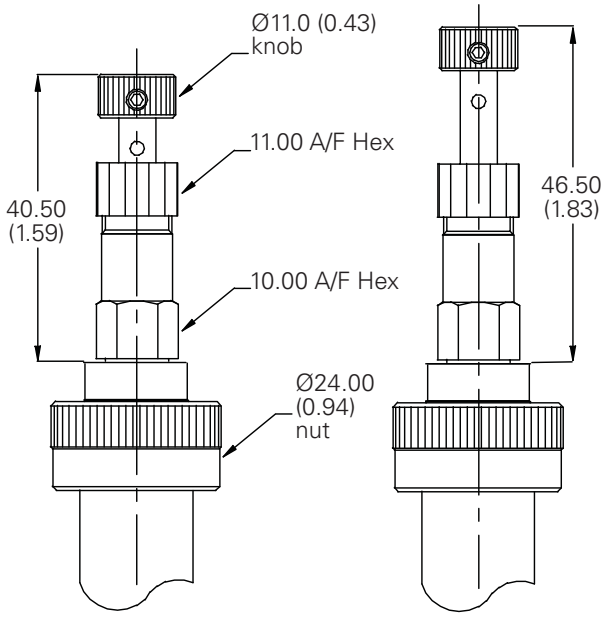

Normal position
Available for: SV9A-10-A, SV9A-10-B, SV9A-10-E, SV9A-10-F, SV9A-10-G

Pulled out

Where measurements are critical request certified drawings. We reserve the right to change specifications without notice.

Manual override options

Push type overrides (type P and S)

Note: Manual override is available on all solenoid cartridge valves, except SBV series valves.

⚠ Warning
The Manual override option is intended for emergency use, not for continuous duty operation.

Manual override "S" screw type

To override:

1. Turn the override button clockwise until it stops.
2. The override button will remain activated until the override button is turned counterclockwise.

To release:

1. Turn the override button counterclockwise until it stops.

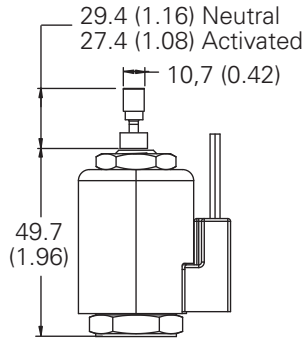

8-Series – 210 bar valves

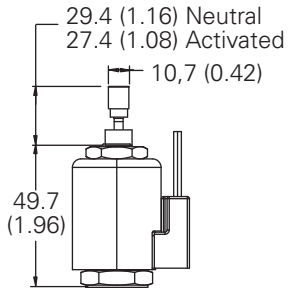

8-Series – 350 bar valves

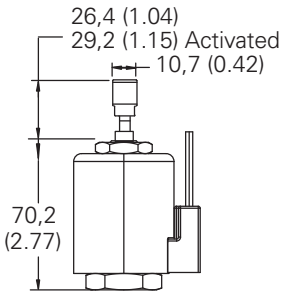

10, 12, 16, 20-Series – 210 bar valves

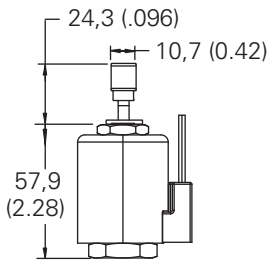

10, 12, 16, 20-Series – 350 bar valves

Manual override "P" push type

To override:

1. Push the override button to stop and hold.

To release:

1. Remove pressure from the override button.

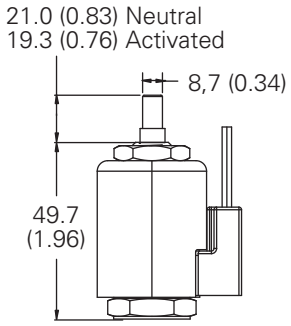

8-Series – 210 bar valves

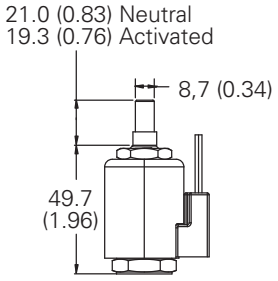

8-Series – 350 bar valves

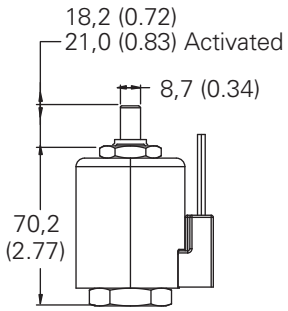

10, 12, 16, 20-Series – 210 bar valves

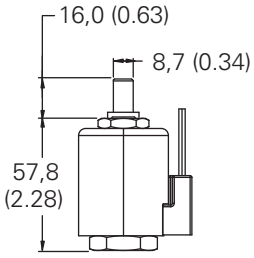

10, 12, 16, 20-Series – 350 bar valves

Manual override "P" & "S" options are available on the following models:

SV13-10-OP/OS-0-00
SV13-12-OP/OS-0-00
SV13-16-OP/OS-0-00
SV13-20-OP/OS-0-00
SV15-10-OP/OS-0-00
SV15-8-OP/OS-0-00
SV3-10-OP-0-00
SV3-10-OS-0-00
SV3-12-OP-0-00
SV3-12-OS-0-00
SV3-16-OP-0-00
SV3-16-OS-0-00
SV3-20-OP-0-00
SV3-20-OS-0-00
SV3-8-CM-0-00
SV3-8-OP-0-00
SV3-8-OS-0-00
SV4-10-3P-0-00
SV4-10-3S-0-00
SV4-8-3P-0-00
SV5-10-OP-0-00
SV5-10-OS-0-00
SV5-8-OP-0-00
SV5-8-OS-0-00
SV7-10-4P-0-00
SV7-10-4S-0-00

Where measurements are critical request certified drawings. We reserve the right to change specifications without notice.

Manual override options

Pull type overrides (type M and R)

⚠ Warning
The Manual override option is intended for emergency use, not for continuous duty operation.

Note: Manual override is available on all solenoid cartridge valves, except SBV series valves.

Manual override "M" pull type

To override:

1. Pull up knob until the override tooth is completely out of the detent base.
2. Turn the knob clockwise until the override tooth is resting securely on top of the detent base slot.

To release:

1. Pull up knob slightly from surface.
2. Turn the knob clockwise until the override tooth is securely engaged in slot of the detent base.

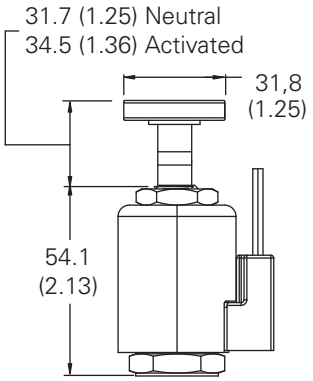

8-Series – 210 bar and 350 bar values

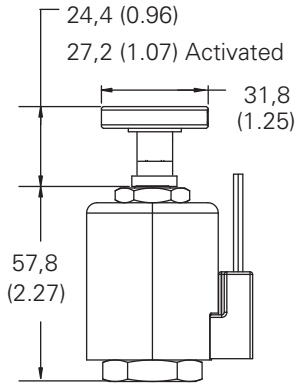

10, 12,16, 20-Series – 210 bar and 350 bar values

Manual override "R" cable type (not available on size 8 models)

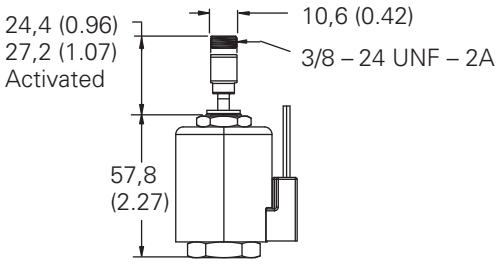

Manual override "M" options are available on the following models:

SBV11-8-CM-0-00	SV1-16-CM-0-00	SV13-20-CM-0-00	SV2-10-4M-0-00	SV4-10-CM-0-00
SBV12-8-CM-0-00	SV11-8-3M-0-00	SV14-10-CM-0-00	SV2-10-CM-0-00	SV4-10-OM-0-00
SV1-10-3M-0-00	SV11-8-4M-0-00	SV14-10-OM-0-00	SV2-20-CM-0-00	SV4-8-CM-0-00
SV1-10-4M-0-00	SV12-10-CM-0-00	SV14-8-CM-0-00	SV2-8-4M-0-00	SV4-8-OM-0-00
SV1-10-CM-0-00	SV12-8-4M-0-00	SV14-8-OM-0-00	SV3-10-4M-0-00	SV5-10-4M-0-00
SV11-10-3M-0-00	SV13-10-CM-0-00	SV15-8-CM-0-00	SV3-10-CM-0-00	SV5-8-CM-0-00
SV11-10-4M-0-00	SV13-12-CM-0-00	SV1-8-3M-0-00	SV3-12-CM-0-00	
SV11-10-CM-0-00	SV13-16-CM-0-00	SV1-8-4M-0-00	SV4-10-4M-0-00	

Manual override "R" options are available on the following models:

SV1-10-3R-0-00	SV2-10-4R-0-00	SV3-10-CR-0-00	SV4-10-OR-0-00	SV1-16-CR-0-00
SV1-10-4R-0-00	SV2-10-CR-0-00	SV4-10-4R-0-00	SV5-10-4R-0-00	SV2-20-CR-0-00
SV1-10-CR-0-00	SV3-10-4R-0-00	SV4-10-CR-0-00	SV3-12-CR-0-00	

Where measurements are critical request certified drawings. We reserve the right to change specifications without notice.

Versatile, Proven, Best Value

Sectional Design for Multiple Configurations

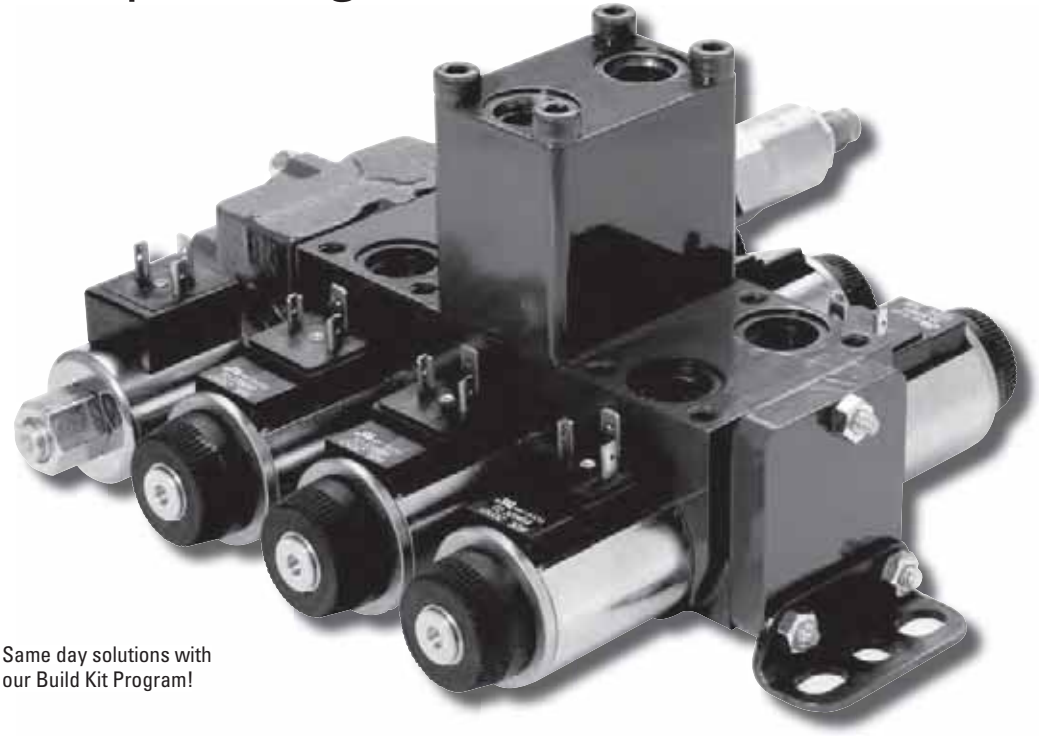

Same day solutions with our Build Kit Program!

EATON
Powering Business Worldwide

MDG Mobile Valve

Eaton's MDG mobile directional control valve uses a modular, versatile design based on our proven Vickers® DG4V3 design.

Eaton® MDG valves, truly designed for mobile applications, offer the traditional benefits of a stackable mobile valve and provide further value as circuit options for mobile manifold systems. This same versatility and flexibility applies to system applications, making it your best value for customized, multi-functional circuits.

For more information, contact your local Eaton distributor, call us at 800-547-7805 or visit us on the web at: www.eaton.com/hydraulics.

Proportional valves

Proportional solenoid valves for pressure and flow control



Powering Business Worldwide

Proportional valves

PROPORTIONAL VALVES B-4
PFR21H B-8
EPV10 ..... B-10
EPV16 ..... B-14
EPV16A B-17
EPV16B B-18
ESV1-8-C B-20
ESV1-10-C B-22
ESV1-12-C B-24
ESV1-8-O B-26
ESV1-10-O B-28
ESV1-12-O B-30
EFV1-10-C B-32
EFV1-12-C B-36
EFV1-10-O B-40
EFV1-12-O B-44
ESV9-8-E B-48
ESV9-8-F B-49
ESV9-8 ..... B-50
ESV9-10 ..... B-52
ESVL9-10-E B-53
ESVL9-10-F B-54
ESVL9-10 ..... B-55
PFR24A B-57
EFV2-12-C B-59
EFV2-12-O B-63
PDR21A B-67
IRV1-10 ..... B-69
IRV2-10 ..... B-71
ERV1-10 ..... B-73
ERV1-16 ..... B-75
PPD22A B-77
EPRV2-8 ..... B-79
EPPV5 ..... B-81
EPPV6 ..... B-83
EPRV1-10 ..... B-85
EPRV3-10 ..... B-87
EPRV1-16 ..... B-89

Proportional valves

Valve locator/section contents

Note: Proportional valve solenoid coils and electronic valve drivers are covered in section C of this Catalog.

Functional symbol

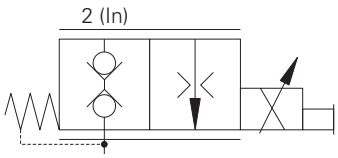

Model	Cavity	Flow rating	Typical pressure	Page
Proportional bi-directional, NC, poppet		**L/min (USgpm)**	**bar (psi)**	
PFR21H	A879	18 (5)	210 (3000)	B-8

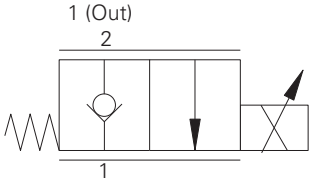

Model	Cavity	Flow rating	Typical pressure	Page
Proportional bi-directional, NC, poppet		**L/min (USgpm)**	**bar (psi)**	
EPV10	C-10-2	0-30 (0-8)	350 (5000)	B-10

EPV16A

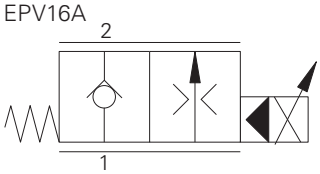

Model	Cavity	Flow rating	Typical pressure	Page
Proportional flow control, NC, poppet		**L/min (USgpm)**	**bar (psi)**	
EPV16A	C-16-3SU (undercut)	0-160	280 (4000)	B-17
EPV16B	C-16-3SU (undercut)	0-160	280 (4000)	B-18

EPV16B

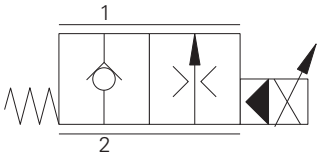

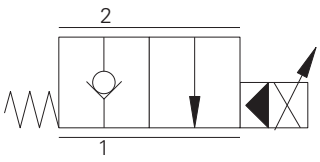

Model	Cavity	Flow rating	Typical pressure	Page
Proportional flow control, NC, poppet		**L/min (USgpm)**	**bar (psi)**	
ESV1-8-C	C-8-2	31 (9)	210 (3000)	B-20
ESV1-10-C	C-10-2	70 (19)	210 (3000)	B-22
ESV1-12-C	C-12-2	104 (27)	210 (3000)	B-24

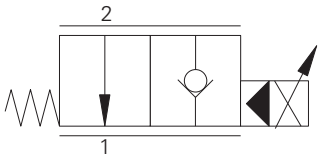

Model	Cavity	Flow rating	Typical pressure	Page
Proportional flow control, NO, poppet		**L/min (USgpm)**	**bar (psi)**	
ESV1-8-O	C-8-2	31 (9)	210 (3000)	B-26
ESV1-10-O	C-10-2	70 (19)	210 (3000)	B-28
ESV1-12-O	C-12-2	104 (27)	210 (3000)	B-30

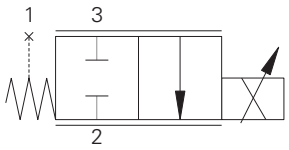

Model	Cavity	Flow rating	Typical pressure	Page
Proportional flow control, NC, spool		**L/min (USgpm)**	**bar (psi)**	
EFV1-10-C	C-10-3	38 (10)	210 (3000)	B-32
EFV1-12-C	C-12-3	77 (20)	210 (3000)	B-36

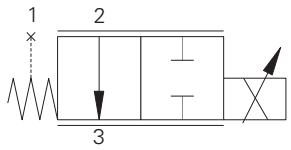

Model	Cavity	Flow rating	Typical pressure	Page
Proportional flow control, NO, spool		**L/min (USgpm)**	**bar (psi)**	
EFV1-10-O	C-10-3	30 (10)	210 (3000)	B-40
EFV1-12-O	C-12-3	104 (28)	210 (3000)	B-44

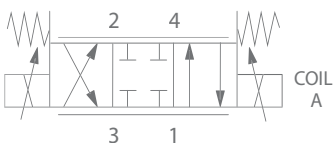

Model	Cavity	Flow rating	Typical pressure	Page
Proportional flow control, NO, spool		**L/min (USgpm)**	**bar (psi)**	
ESV9-8-E	C-8-4	11.0 (2.9)	210 (3,000)	B-48
ESV9-8-F	C-8-4	11.0 (2.9)	210 (3,000)	B-49
ESV9-10	C-10-5S	22.0 (5.8)	250 (3,600)	B-52

Functional symbol

E

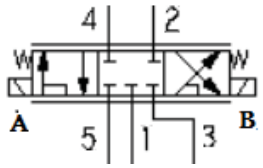

Model	Cavity	Flow rating	Typical pressure	Page
Proportional flow Control, NC, spool		L/min (USgpm)	bar (psi)	
ESVL9-10-E	C-10-5S	23 (2.9)	250 (3600)	B-53
ESVL9-10-F	C-10-5S	23 (2.9)	250 (3600)	B-54

F

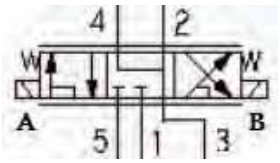

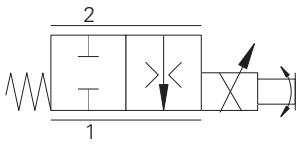

Model	Cavity	Flow rating	Typical pressure	Page
Proportional bi-directional, NC, poppet		L/min (USgpm)	bar (psi)	
PFR24A	A6701	18 (5)	210 (3000)	B-57

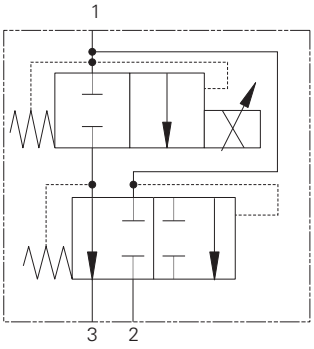

Model	Cavity	Flow rating	Typical pressure	Page
Proportional flow control, NC, spool		L/min (USgpm)	bar (psi)	
EFV2-12-C	C-12-3	<114 (30)	210 (3000)	B-59

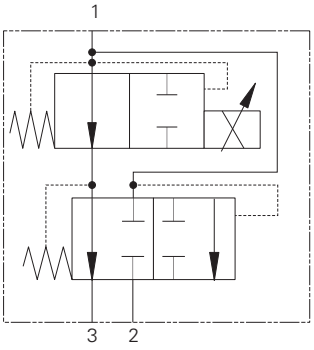

Model	Cavity	Flow rating	Typical pressure	Page
Proportional flow control, NO, spool		L/min (USgpm)	bar (psi)	
EFV2-12-O	C-12-3	<114 (<30)	210 (3000)	B-63

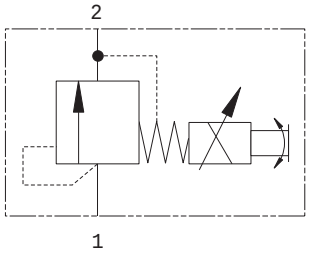

Model	Cavity	Flow rating	Typical pressure	Page
Proportional relief, NO, POPPET		L/min (USgpm)	bar (psi)	
PDR21A	A879	1.5 (.3)	350 (5000)	B-67

Proportional valves

Valve locator/section contents

Functional symbol

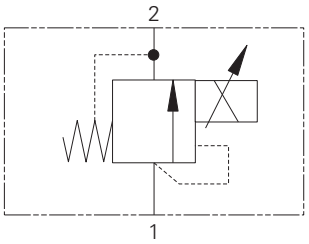

Model	Cavity	Flow rating	Typical pressure	Page
Proportional inverse relief, poppet		**L/min (USgpm)**	**bar (psi)**	
IRV1-10	C-10-2	1 (.25)	210 (3000)	B-69
IRV2-10	C-10-2	57 (15)	240 (3500)	B-71

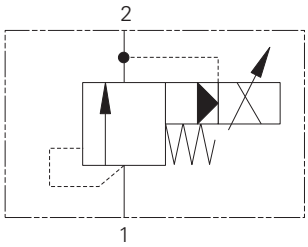

Model	Cavity	Flow rating	Typical pressure	Page
Proportional relief, spool		**L/min (USgpm)**	**bar (psi)**	
ERV1-10	C-10-2	<60 (15)	210 (3000)	B-73
ERV1-16	C-16-2	<132 (<39)	210 (3000)	B-75
EPPV5	TC06025	8 (2.1)	50 (725)	B-81
EPPV6	TC06023	8 (2.1)	50 (725)	B-83

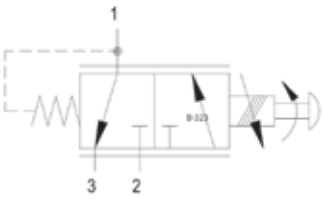

Model	Cavity	Flow rating	Typical pressure	Page
Proportional reducing/relief, spool		**L/min (USgpm)**	**bar (psi)**	
PPD22A	A879	20 (5)	210 (3000)	B-77
EPRV2-8	C-8-3	7.6 (2)	35 (500)	B-79

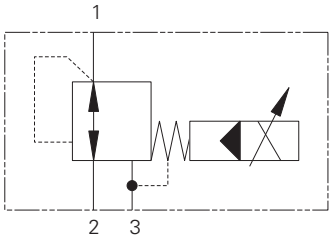

Model	Cavity	Flow rating	Typical pressure	Page
Proportional reducing/relief, spool		**L/min (USgpm)**	**bar (psi)**	
EPRV1-10	C-10-3	8 (2)	35 (500)	B-85
EPRV3-10	C-10-3	30 (8)	210 (3000)	B-87
EPRV1-16	C-16-3	7.6 (2)	35 (500)	B-89

This section gives basic specifications for the complete line of Vicker's screw-in proportional control valves. Its purpose is to provide a quick, convenient reference tool when choosing proportional valves or when designing a system using these components.

The **EPV10** has several outstanding performance features which give it a unique position in the screw-in cartridge valve market. Valve gain linearity, flow force pressure compensation characteristics above 20 bar (300 psi) and low internal leakage.

The **EPV16** is a proportionally controlled two-way poppet type valve. The main poppet amplifies a small flow through the pilot circuit and is comparable to a transistor. As the transistor uses small currents to control larger currents, the hydraulic valve transistor or VALVISTOR uses the pilot flow to control the main stage flow with servo-like response flow to control.

The **ESV1** is a proportional two-way, pressure compensated, poppet type flow control valve. The valve is available in 8, 10, and 12 sizes, both normally open or normally closed in the de-energized position.

The **EFV1** is a proportionally controlled two-way, spool type flow control valve. Technically the valve is not pressure compensated, but it is partial flow force pressure compensated.

The **EFV2** is a three port, pressure compensated, proportional flow control valve. The valve can be used as a priority flow regulator, with regulated flow being supplied to port 3 and excess flow being by-passed to port 2. If port 2 is blocked the valve functions as a restrictive, 2 way, pressure compensated flow regulator.

The **ERV1-10** is an electric, proportionally controlled, internally pilot operated, spool type screw-in relief valve. It is capable of handling flows from 3,8-60,0 L/min (1-15 USgpm) at pressures from 35-210 bar (500-3000 psi). Also available is an ERV1-16 which is capable of handling flows from 7,6-132 L/min. (2-35 USgpm) at pressures from 35-210 bar (100-500 psi).

The **ERV2-10** is a low flow electric proportionally controlled relief valve similar to the ERV1-10. This valve is rated for flows from 0,2-2,8 L/min (0.05-0.75 USgpm) and pressures up to 35 bar (500 psi).

The **EPRV2-8** is an electric, proportionally controlled, direct acting spool type, screw-in pressure reducing/relieving valve. It is capable of handling flows from 0-7,6 L/min (0-2 USgpm) at set pressures from 0-22 bar (0-320 psi).

The **EPRV1-10** is an electric, proportionally controlled, internally pilot operated, spool type, screw-in pressure reducing/relieving valve. It is capable of handling flows from 0-7,6 L/min (0-2 USgpm) at set pressures from 14-35 bar (200-500 psi). Also available is an **ERV1-16** which is capable of handling flows from 0-38 L/min (0-10 USgpm) at set pressures from 14-35 bar (200-500 psi).

The **EPRV3-10** is an electric, proportionally controlled, internally pilot operated, spool type, screw-in pressure reducing/relieving valve. It is capable of handling flows from 0-30 L/min (0-8 USgpm) at set pressures from 35-207 bar (500-3000 psi).

Vickers proportional pressure and flow control valves are designed to be easily controlled by the simplest of DC electrical devices such as a 12 volt battery and a potentiometer.

Varying the voltage at the coil is one of the simplest means of control available. Any of the Vickers DC coils will work on most of these valves simply by varying the voltage between 0 and 75% of the rated coil voltage. It should be noted that as the operating temperature of a coil increases, the solenoid force decreases. Therefore if the voltage is held constant as the coil heats up then valve pressure (or flow) will change.

The **IRV1** is a proportionally controlled poppet type, relief valve, with an inverse function. This valve is capable of handling flows up to 1 L/min (0.25 USgpm) and pressures up to 210 bar (3000 psi).

IRV2-10 is an inverse proportionally controlled spool type two stage relief valve. Ideal for use to control fan drive or brush pressure, where full speed or force is required under electrical failure. Valve is capable to handle flow up to 57 lpm (15 USgpm) and pressure up to 240 bar (3500 psi).

Electrical current controls with PWM are recommended for all Eaton proportional valves.

Closed-loop electrical control with feedback from the parameter to be monitored will provide the most accurate control.

Valve features and benefits

- Products in this catalog have been fatigue tested to one million cycles at 132% or 10 million cycles at 115% of rated pressure
- All operating parts are hardened steel, ground and honed for long life and low leakage
- Designed for maximum flexibility and minimal space requirements
- All exposed cartridge surfaces are zinc dichromate plated to resist corrosion
- Reliable, economical and compact
- Rated flows up to 160 L/min (42 USgpm)
- Optional nose-in, side-out or side-in, nose out flow direction (EPV16 series)

Coil features and benefits

The valves in this catalog are offered with a choice of two or three standard voltages and several types of electrical connections. For other coil ratings and connections, consult your Eaton applications engineer.

- Variety of voltages and terminations
- Coils are interchangeable for serviceability on the EPV10 and EPV16. Coils are interchangeable for serviceability on the ERV1-10, EPV1-16, EPRV1-10 and EPRV1-16
- Compact, one-piece weather-proof encapsulated design. Eliminates need for extra seals
- An arc suppression diode molded into the coil is available as a standard option on ERV, EPRV and EFV valves

Fluid cleanliness

Proper fluid condition is essential for long and satisfactory life of hydraulic components and systems. Hydraulic fluid must have the correct balance of cleanliness, materials, and additives for protection against wear of components, elevated viscosity, and inclusion of air.

⚠ Warning

Application of these products beyond published performance specifications may cause valve malfunction which may result in personal injury and/or damage to the machine.

⚠ Warning

For pressures over 210 bar (3000 psi) use steel housing.

PFR21H - Proportional valve

Proportional bi-directional poppet, flow control valve
Up to 18L/min (5 USgmp) • 210 bar (3000 psi)

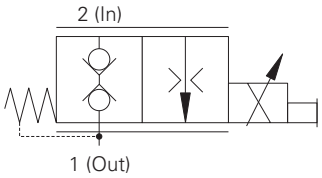

Sectional view

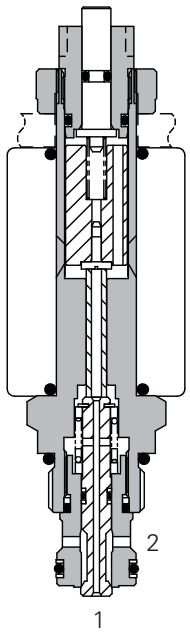

Description

This is a proportionally operated 2 way poppet valve. Ideal for use in lowering circuits to give good control to the operator. The valve will compensate as the pressure difference increases to prevent speed increase due to increasing load.

Operation

In the de-energised position the valve is blocked in both directions. As the current to the coil is increased the valve opens proportionally. There is also an element of compensation as the pressure difference across the valve increases. See performance graphs.

Features

- High flow capacity with reduced space requirements.
- Standard valve bodies and common cavities.
- One-piece encapsulated coil with minimal amperage draw.
- Oil immersed armature solenoid.
- Various coil terminals and voltages.
- Coil interchangeability with valves of same series.
- Manual override, seal variations and other options available.
- Sealed coil arrangement to protect stem from corrosion.
- Reversible coil without affecting performance.

Performance data

Ratings and specifications

Performance data is typical with fluid at 32 cSt (150 SSU)	
Max inlet pressure	210 bar (3000 psi)
Max regulated flow at rated current @ 50 bar	20 L/min (5.3 USgpm) @100%, 15 L/min (3.9 USgpm) @85%, 11 L/min (2.9 USgpm) @75%
Frequency	200 to 400 Hz - 200 recommended
Dead band	38-60% of rated current
Response time	80ms
Internal leakage	Up to 0.67 ml/min (10dpi) 210 bar differential at 32 centistrokes
Temperature range (oil)	-30° to 120°C (-22° to 248°F)
Cavity	A6701 (see Section M)
Electrical data	See coil data sheet
Torque cartridge into cavity	30 Nm (22 lbs ft)
Mounting position	Unrestricted
Fluids	Most general purpose hydraulics fluids
Seal material	Standard nitrile with PTFE back up rings
Filtration	BS5540/4 Class 16/13 (25 micron or better)
Nominal viscosity range	15 to 250 cSt
Standard housing materials	Aluminium
Coil model code	C16-*-*/29
Voltage available	12, 24 VDC
Coil weight	.3 kg (.6 lbs)
Weight	.2 kg (.44 lbs)
Seal kit	SK1138 (Nitrile) SK1138V (Viton®)

Viton is a registered trademark of E.I. DuPont

Pressure drop

Viscosity = 32 cSt (150 SSU)
PFR21H @ 100%

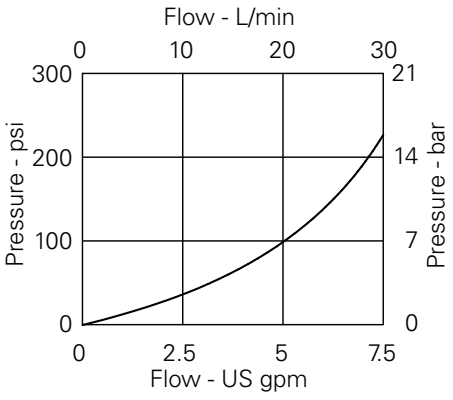

Performance curves

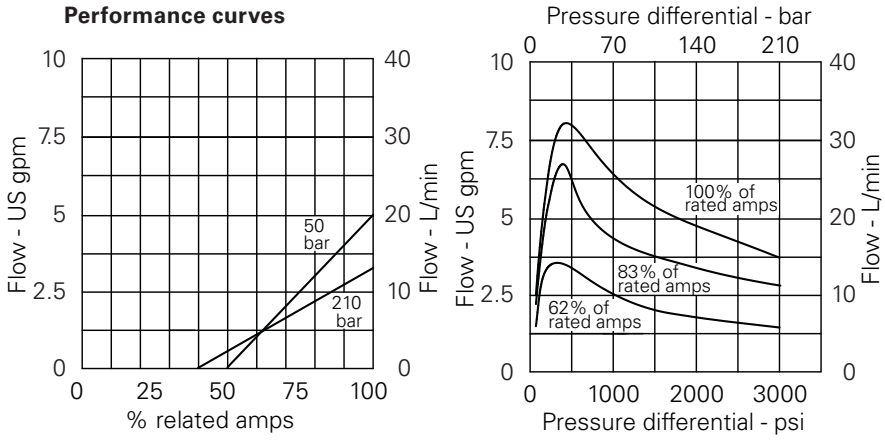

Where measurements are critical request certified drawings. We reserve the right to change specifications without notice.

PFR21H - Proportional valve

Proportional bi-directional poppet, flow control valve
Up to 18L/min (5 USgmp) • 210 bar (3000 psi)

Model code

PFR21H – N – 6 – H – 24 – 3W

1 2 3 4 5 6

1 Function
PFR21H - Normally closed

2 Seal material
N - Nitrile
V - Viton

3 Manual override
6 - Screw

4 Coil termination
H - DIN43650
F - Flying Lead
DM - Deutsch moulded
Other terminations available on request.

5 Voltage
12 - 12 VDC
24 - 24 VDC

6 Port size

Code	Port size	Housing number
Blank	Cartridge only	
2W	1/4" BSP	A12592
3W	3/8" BSP	A7450
6T	3/8" SAE	A19355

Dimensions
mm (inch)

Cartridge only

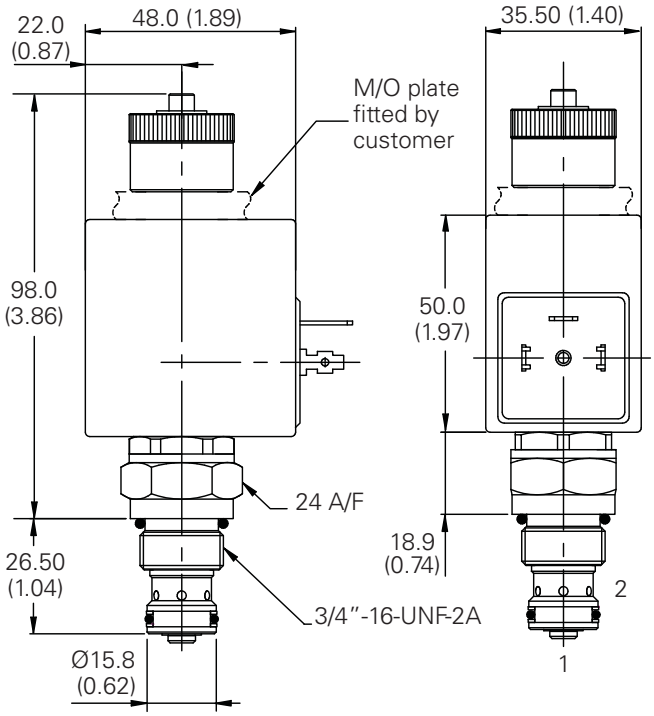

Installation drawing

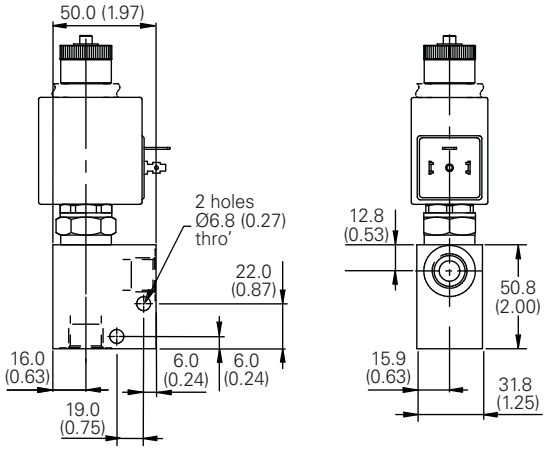

Where measurements are critical request certified drawings. We reserve the right to change specifications without notice.

EPV10 - Proportional valve

Proportional uni-directional poppet, flow control valve
Up to 30L/min (8 USgmp) • 350 bar (5000 psi)

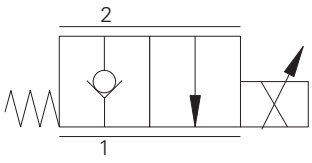

Operation

In the de-energized condition, blocked from port 2 to 1 with no reverse flow permitted. When energized, flow is allowed from port 2 to port 1 in direct proportion to the current applied to the solenoid coil.

Features

Hardened, ground and honed working parts to limit leakage. IP69K Tough coil compatibility. Continuously rated. Compact design with low pressure drop.

Sectional view

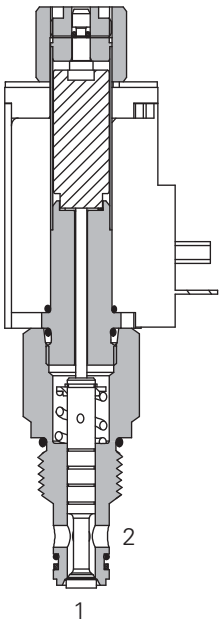

Description

This is a uni-directional proportionally controlled, normally closed poppet valve. It is ideal for lowering circuits controlling the speed of movement with low leakage when closed.

Performance data

Ratings and specifications

Performance data is typical with fluid at 21,8 cSt (105 SSU) and 49°C (120°F)	
Typical application pressure (at port 2)	350 bar (5000 psi)
Cartridge fatigue pressure (infinite life)	350 bar (5000 psi)
Rated flow	0 - 30 L/min (0 - 8 USgpm)
Operating ambient temperature	-30° to 90°C (-22° to 194°F)
Cavity	C-10-2
Fluids	Anti-wear hydraulic oils with Buna-N seals (standard) Phosphate esters (non-alkyl) with Viton® seals are available by request Viton is a registered trademark of E.I. DuPont
Weight cartridge only	0,78 kg (1.72 lbs)
Filtration	70 - 210 bar (1000 - 3000 psi) Cleanliness code 17/**15/12** 210+ bar (3000+ psi) Cleanliness code 15/**13/11**
Standard housing materials	Aluminum or Steel
Typical hysteresis	Less than 4% of rated current at 10 bar pressure drop – Pulse Width Modulated (PWM)
Internal leakage	10 cm^3 maximum @ 140 bar (2000 psi) and oil viscosity of 30 cSt
Oil viscosity range	10 - 800 cSt
Nominal supply voltage	12 or 24 VDC
Threshold current	Adj from 300 - 600 mA (12 VDC) Adj from 150 - 300 mA (24 VDC)
Coil current @ max flow	0.7 amps max @ 24 VDC 1.4 amps max @ 12 VDC
Recommended PWM frequency	100 - 200 Hz application dependent, 150 Hz typ
Coil resistance @ 20°C (86°F)	12V-6.5Ω 24V-25.0Ω
Power consumption @ rated current and 20°C coil temperature	12V-12.8 watts 24V-12.8 watts
Cartridge seal kit	02-317580 (Buna-N)

Where measurements are critical request certified drawings. We reserve the right to change specifications without notice.

EPV10 - Proportional valve

Proportional uni-directional poppet, flow control valve
Up to 30L/min (8 USgmp) • 350 bar (5000 psi)

Model code

EPV 10 – * – ** – ** – *** – * – * – 10 – (S**)

1 2 3 4 5 6 7 8 9 10

1 Function

EPV - Electro-proportional flow control valve, poppet type

2 Size

10 - 10 Size

3 Valve housing material

Omit for cartridge only

A - Aluminum
S - Steel

Maximum operating pressure for aluminum housing is 210 bar (3000 psi)

5 Seal material

N - Buna-N
V - Viton (standard)
NF - Buna-N and 60 mesh filter screen
VF - Viton and 60 mesh filter screen

4 Port size

Code	Port size	Housing number	
		Aluminium	Steel
0	Cartridge only		
3G	3/8" BSPP	876703	02-175103
6H	SAE 6	876700	02-175100
8H	SAE 8	876701	02-175101

See section J for housing details.

8 Coil/Connector types

Connector			
0	No connector	**12VDC**	**24VDC**
W	Leadwire (DC only)	02-361830	02-363310
Q	Spade terminals (DC only)	02-361836	02-363311
U	DIN 43650	02-361837	02-363321
Y	Metri-Pack 150 male*	02-361845	02-363322
F	Weather-Pack male	02-361848	02-364328
N	Deutsch DT04-2P	02-154124	02-391571

*Preferred Packard connector.

6 Voltage rating

12D - 12VDC
24D - 24VDC
00D - No coil

7 Manual override option

0 - No manual override
M - Pin type
S - Screw type (3mm Hex)

Manual override is available in two different configurations, either push pin type is used when system pressure does not exceed 210 bar (3000 psi). The screw type can be used at any system pressure.

9 Design number

10 - Design no.

10 Special features

Blank - None

Dimensions

mm (inch)

Cartridge only

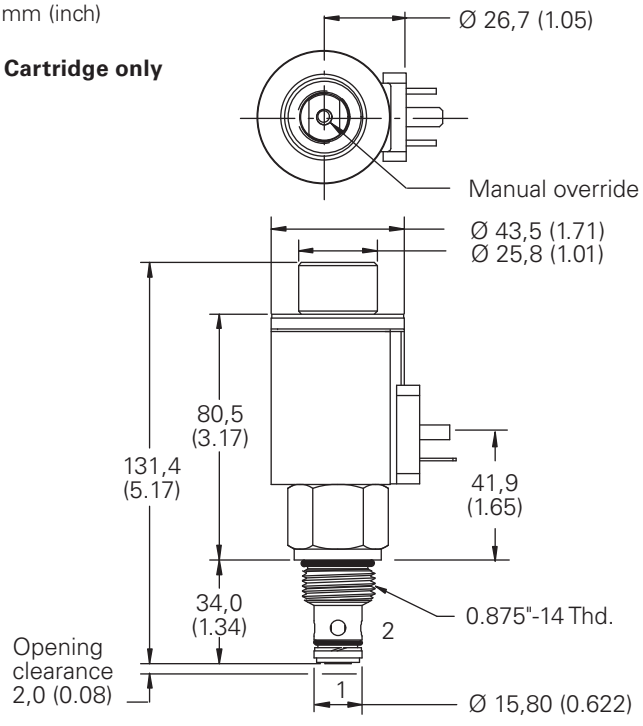

Valve is shown with "U" coil. See Section C for coil information. Torque cartridge in housing

A - 47-54 Nm (35-40 ft. lbs)
S - 68-75 Nm (50-55 ft. lbs)

⚠ Warning

The cavity should be machined to the 14,29 (0.562) maximum diameter and 36,00 (1.417) maximum depth. See section M.

⚠ Warning

When using the "Screw Type" override, care must be taken to return the override back to its neutral position before activating the valve. Failure to take this precaution may result in personal injury or damage to the machine.

Where measurements are critical request certified drawings. We reserve the right to change specifications without notice.

EPV10 - Proportional flow control valve

Proportional uni-directional poppet, flow control valve
Up to 30L/min (8 USgmp) • 350 bar (5000 psi)

Step response data

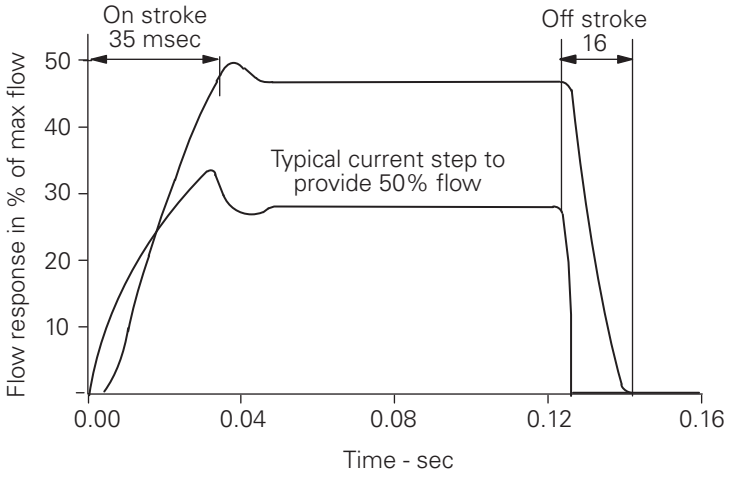

Flow vs current

With 10 bar differential between inlet and outlet

A - 210 bar (3000 psi) pressure drop from Port 2 to Port 1

B - 10 bar (150 psi) pressure drop from Port 2 to Port 1

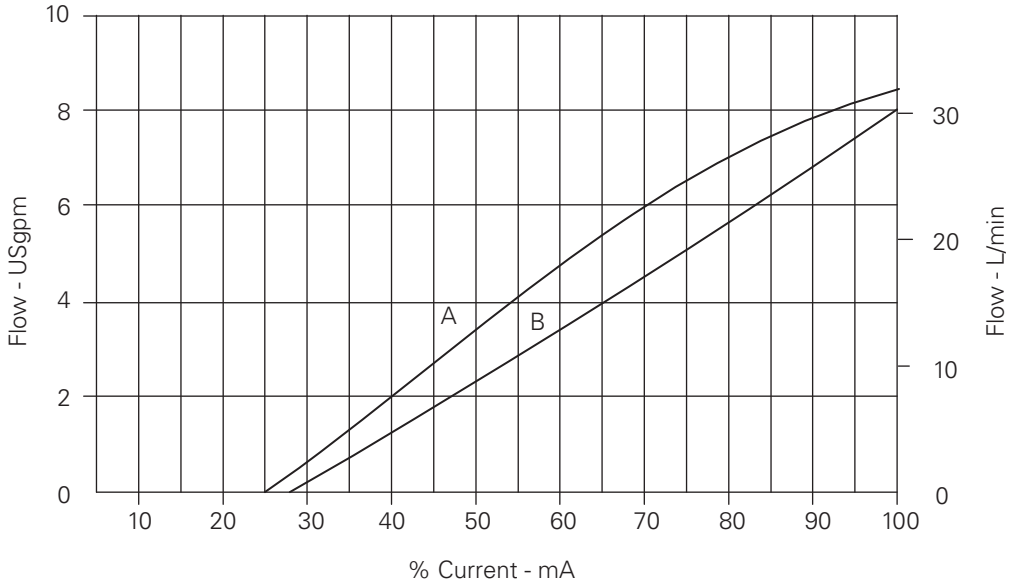

Where measurements are critical request certified drawings. We reserve the right to change specifications without notice.

Flow vs pressure drop

Per % of input current

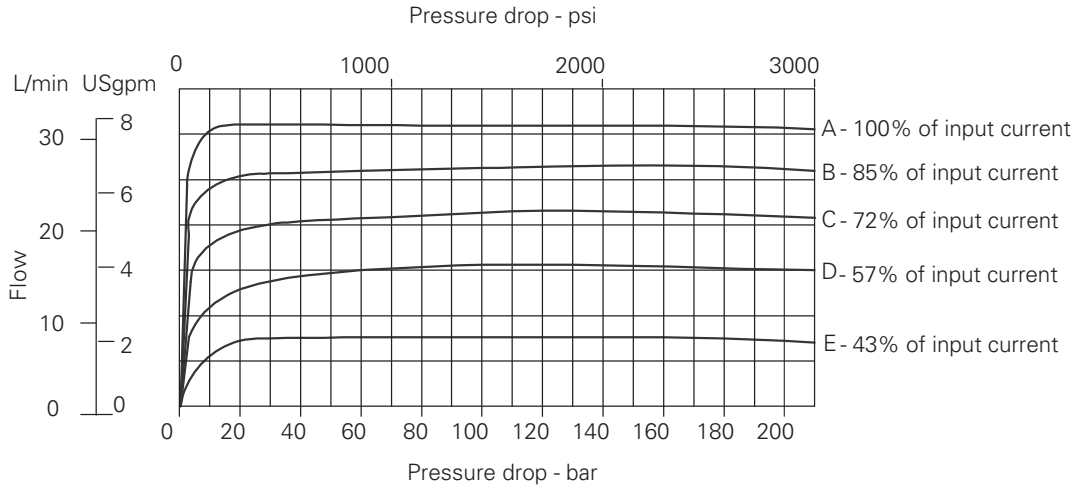

Typical flow response

For an amplitude of ± 40% maximum stroke (center to offset) about the 50% position.

ΔP = 10 bar (145 psi)

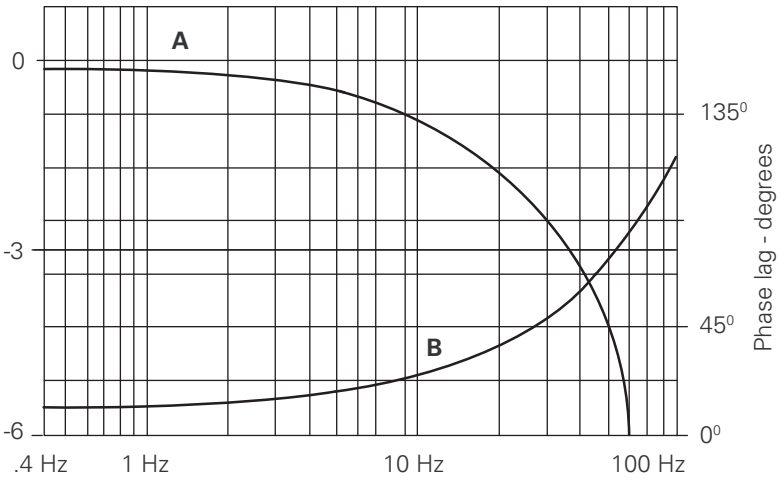

A - dB
B - Phase Lag

EPV16 - Proportional valve

Proportional flow control, normally closed, poppet
160L/min (42 USgpm) • 280 bar (4000 psi)

EPV16A

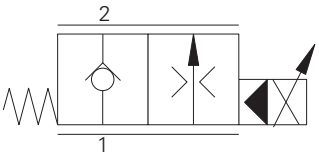

EPV16B

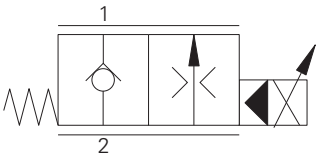

Operation

"A" style (nose in, side out) - In the de-energized position this valve remains closed from port 1 to port 2. When current is applied to the coil, a ontrolled increasing flow will be allowed from port 1 to port 2, in proportion to the current applied.

"B" style (side in, nose out) - in the de-energized position the valve remains closed from port 2 to port 1. When current is applied to the coil, a controlled increasing flow will be allowed from port 2 to port 1. In both examples free reverse flow is allowed in the opposite direction.

Features

Hardened and ground working parts. 280 bar working pressure, very low hysterisis, long life.

Sectional view

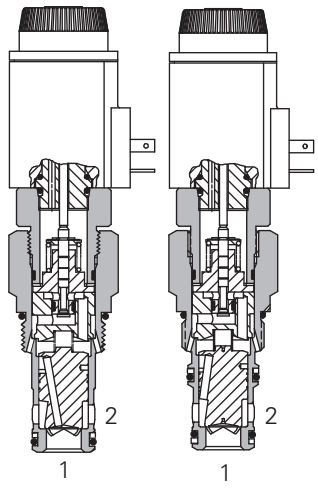

Description

This is a 2 way normally closed, pressure compensated, poppet type, electro proportional screw in cartridge valve with a low hysterisis and fine control. The valve is suitable for demanding applications where long life and accuracy is demanded

Performance data

Ratings and specifications

Performance data is typical with fluid at 21,8 cST (105 SUS) and 49°C (120°F)	
Typical application pressure (all ports)	280 bar (4000 psi)
Cartridge fatigue pressure (infinite life)	280 bar (4000 psi) NFPA rated
Rated flow	0 to 160 L/min (42 USgpm)
Internal leakage	EPV16A 50 cm^3/min, max @ 140 bar (2000 psi) EPV16B 10 cm^3/min, max @ 140 bar (2000 psi)
Oil viscosity range	10-800 cSt
Nominal supply voltage	12/24 VDC
Threshold current	Adj from 350-600 mA (12 VDC) Adj from 175-250 mA (24 VDC)
Coil current for maximum flow	0.7 amps @ 24 VDC 1.4 amps @ 12 VDC
Recommended PWM frequency	100-200 Hz application dependent, 150 Hz typ
Power consumption	12V-12.8 watts 24V-12.8 watts
Coil resistance	12v-6.5 V/24V-25.0 V
Temperature range	-30° to 90°C (-22° to 194°F)
Cavity	C-16-3S (undercut)
Fluids	Antiwear hydraulic oils with Buna-N seals (standard) Phosphate esters (non-alkyl) with Viton®
Filtration	70-210 bar (1000-3000 psi) Cleanliness code 17/**15/12** 210+ bar (3000+ psi) Cleanliness code 15/**13/11**
Housing material (standard)	Aluminum or steel
Typical hysterisis	less than 4% of rated current @ 10 bar pressure drop-pulse width modulated (PWM)
Weight cartridge only	1 kg (2.2 lbs)
Seal kit	02-154069 (Buna-N)

Viton is a registered trademark of E.I. DuPont

Where measurements are critical request certified drawings. We reserve the right to change specifications without notice.

EPV16 - Proportional valve

Proportional flow control, NC, poppet
160L/min (42 USgpm) • 280 bar (4000 psi)

Model code

EPV 16 – * – ** – * – *** – ** – *** – * – * – 13 – (S**)

1 2 3 4 5 6 7 8 9 10 11 12

1 Function

EPV - Solenoid valve

2 Size

16 - 16 size

3 Flow direction

A - Nose-in, side-out
B - Side-in, nose-out

4 Rated flow

4 - 40 L/min (10.5 USgpm)
6 - 60 L/min (16 USgpm)
10 - 100 L/min (26 USgpm)
16 - 160 L/min (42 USgpm)

5 Valve housing material

Omit for cartridge only

A - Aluminum
S - Steel

Note: Aluminum housings can be used for pressures up to 210 bar (3000 psi). Steel housing **must** be used for operating pressures **above** 210 bar 3000 psi).

6 Port size

Code	Port size	Housing number			
		Aluminium		Steel	
		EPV16-A	EPV16-B	EPV16-A	EPV16-B
0	Cartridge only				
4G	1/2" BSPP	02-185448	02-166607	02-180050	02-165500
6G	3/4" BSPP	02-185449	02-161592	02-180051	02-164931
10H	SAE 10	02-185450	02-170238	02-180048	02-161983
12H	SAE 12	02-185447	02-166609	02-180049	02-161982
5C	CETOP5 (NFPA D05) Interface (Requires steel body)				

See section J for housing details.

7 Seal material

N - Buna-N (standard)
V - Viton
NF - Buna-N and 60 mesh filter screen
VF - Viton and 60 mesh filter screen

8 Voltage rating

12D - 12VDC
24D - 24VDC
00D - No Coil

9 Manual override option

Blank - No manual override

0 - No manual override
M - Pin type
S - Screw type (3mm Hex)

Manual override is available in two different configurations, either push pin type is used when system pressure does not exceed 210 bar (3000 psi). The screw type can be used at any system pressure.

Note: When using the "Screw Type" override, care must be taken to return the override back to its neutral position before activating the valve. Failure to take this precaution may result in personal injury or damage to the machine.

10 Connector type

0 - No connector
F - Weatherpack male
Q - Spade Terminals (DC only)
W - Flying Lead
N - Deutsch DT04-2P
Y - Metripack 150 male*
U - DIN 43650

*Preferred Packard connector.
For coil part numbers and dimensions see section C.

11 Design number

13 - Design no.

12 Special features

Blank - None

M - Pin type **S** - Screw type

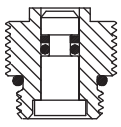

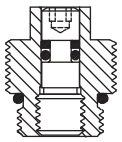

⚠ Warning

When using the "Screw Type" override, care must be taken to return the override back to its neutral position before activating the valve. Failure to take this precaution may result in personal injury or damage to the machine.

⚠ Caution

A separate check valve is required down stream to isolate the EPV valve from load forces when the EPV is used to hold a load.

Where measurements are critical request certified drawings. We reserve the right to change specifications without notice.

EPV16 - Proportional valve

Proportional flow control, normally closed, poppet
160L/min (42 USgpm) • 280 bar (4000 psi)

Pressure drop curves

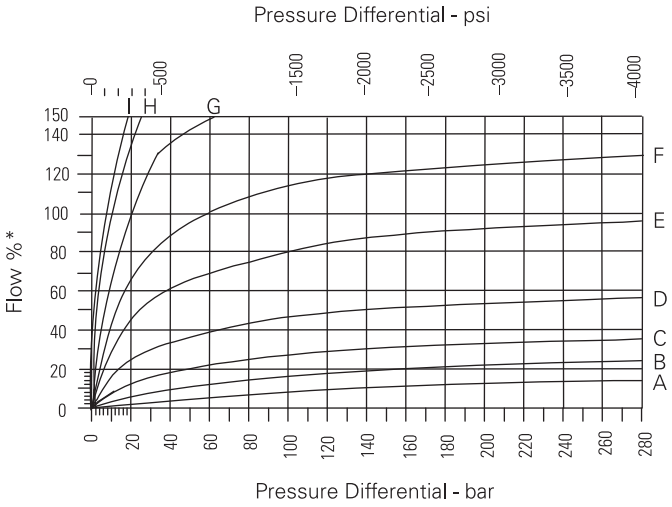

* Flow interims of % for each poppet size

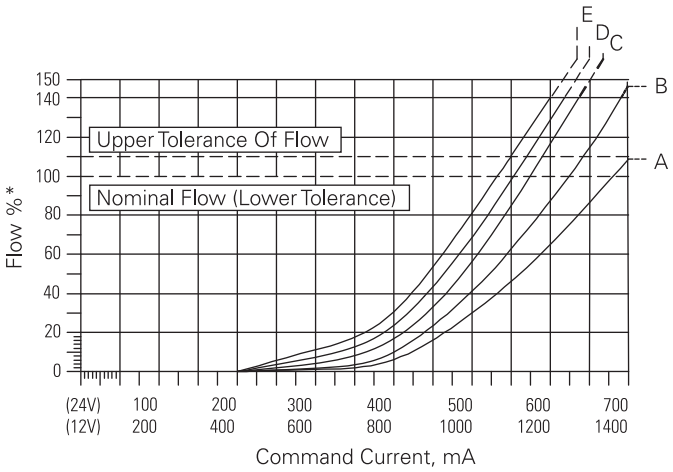

* Flow interims of % for each poppet size

Command current

	12V	24V
A-	600 mA	300mA
B-	700 mA	350mA
C-	800 mA	400mA
D-	900 mA	450mA
E-	1000 mA	500mA
F-	1100 mA	550mA
G-	1200 mA	600mA
H-	1300 mA	650mA
I-	1400 mA	700mA

Pressure differential

A-	10 bar	150 psi
B-	20 bar	300 psi
C-	50 bar	700 psi
D-	100 bar	1500 psi
E-	200 bar	3000 psi

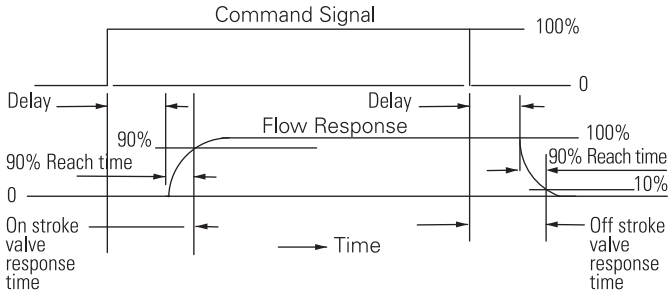

Pressure drop @ 120 L/min (30 USgpm)

Pressure drop DP	On stroke Delay/reach 90%	Off stroke delay/reach 90%
20 bar (290 psi)	24 ms/35 ms	5 ms/15 ms
100 bar (1450 psi)	24 ms/17 ms	5 ms/7 ms

Where measurements are critical request certified drawings. We reserve the right to change specifications without notice.

Dimensions

mm (inch)

Valves are shown with "U" coil. See Section C for coil information.

Torque cartridge in aluminum housing 108-122 Nm (80-90 ft. lbs)

Torque cartridge in steel housing 136-149 Nm (100-110 ft. lbs)

Cartridge only - EPV16A

Nose-in, side out

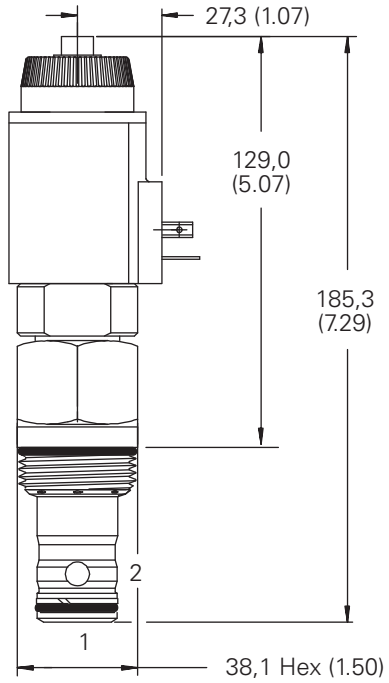

With manual actuator

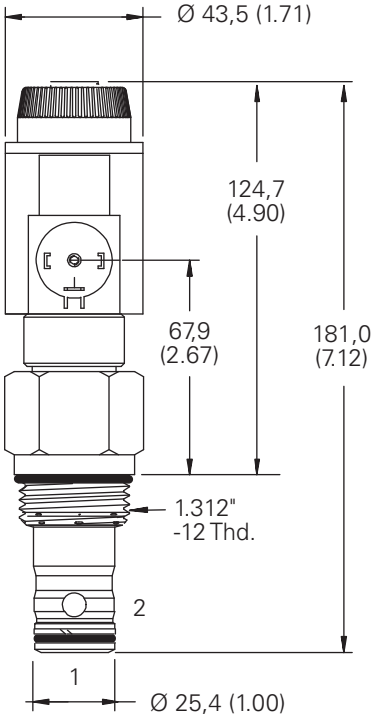

No manual actuator

Note: When stand alone housings are used, the following guidelines apply:

- EPV16-A: Port 3 is to be plugged.
- EPV16-B: Port 3 is to be connected to port 1 in order to provide the required feedback flow path.

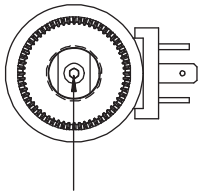

Screw type actuator (shown) 3 mm hex socket

Installation drawing (Steel)

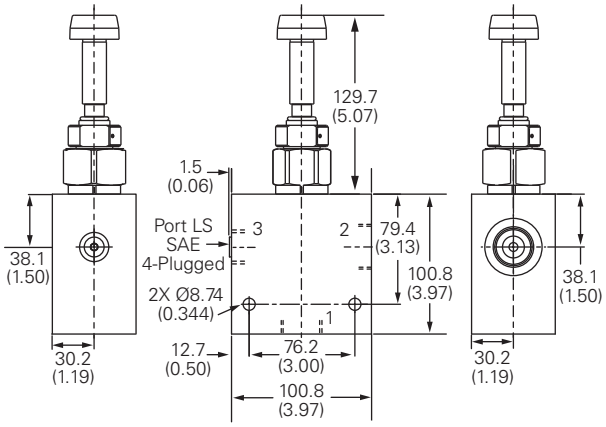

EPV16B

Proportional flow control, normally closed, poppet
160L/min (42 USgpm) • 280 bar (4000 psi)

B

Dimensions

mm (inch)

Cartridge only - EPV16B

Side-in, nose out

For EPV16-B (flow 2 to 1), Port 3 must be connected to Port 1 externally to the cartridge, either by passages in the cavity block or external plumbing.

When purchased with undercut body, this connection is included in the body and Port 3 is not machined.

A separate external port connection is not required for EPV16-A (flow 1 to 2).

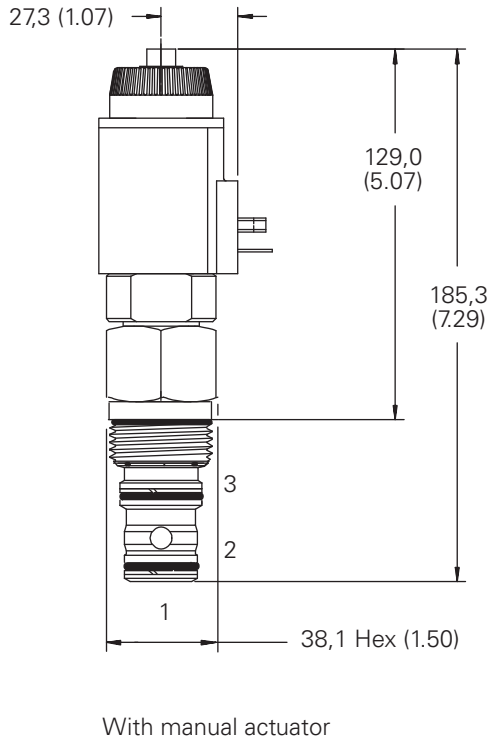

With manual actuator

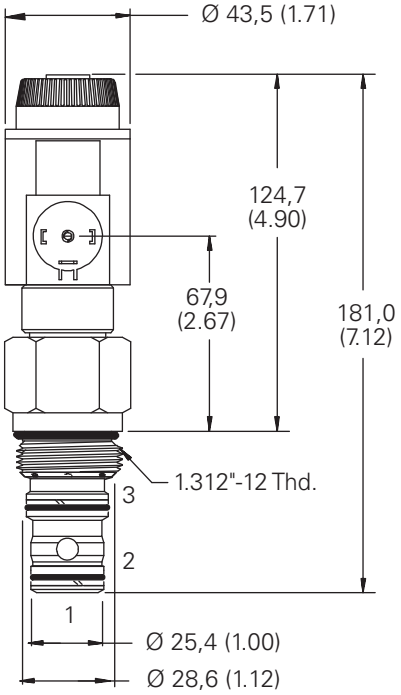

No manual actuator

Required external connection with standard C-16-3S cavity.

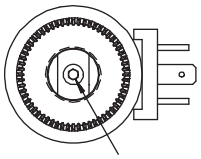

Screw type actuator (shown) 3 mm hex socket

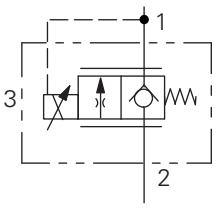

Installation drawing (Steel)

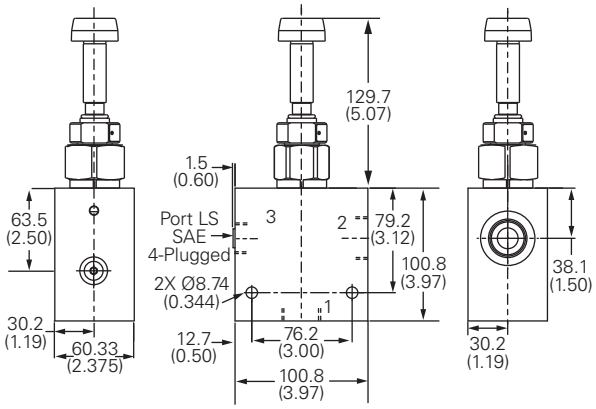

Where measurements are critical request certified drawings. We reserve the right to change specifications without notice.

EPV16-A--S-5C-**-D-(*)-*-12**
CETOP 5 Interface
mm (inch)

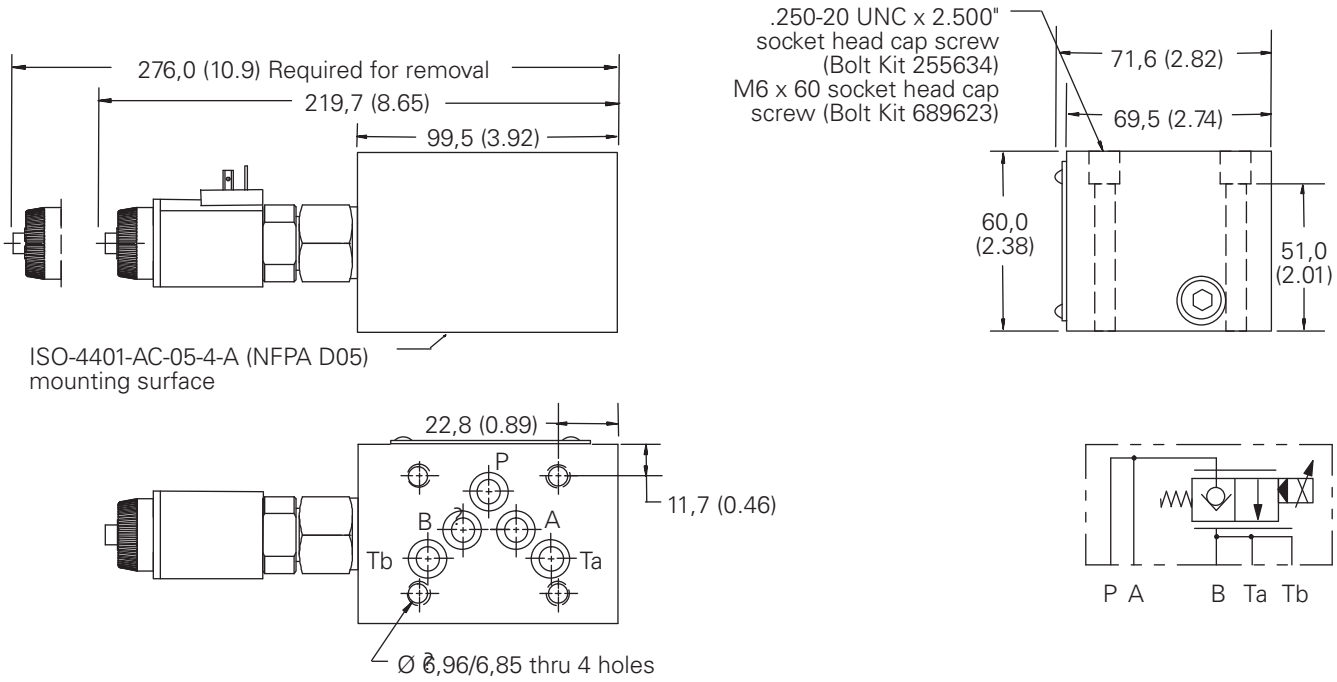

EPV16-B--S-5C-**-D-(*)-*-12**
CETOP 5 Interface
mm (inch)

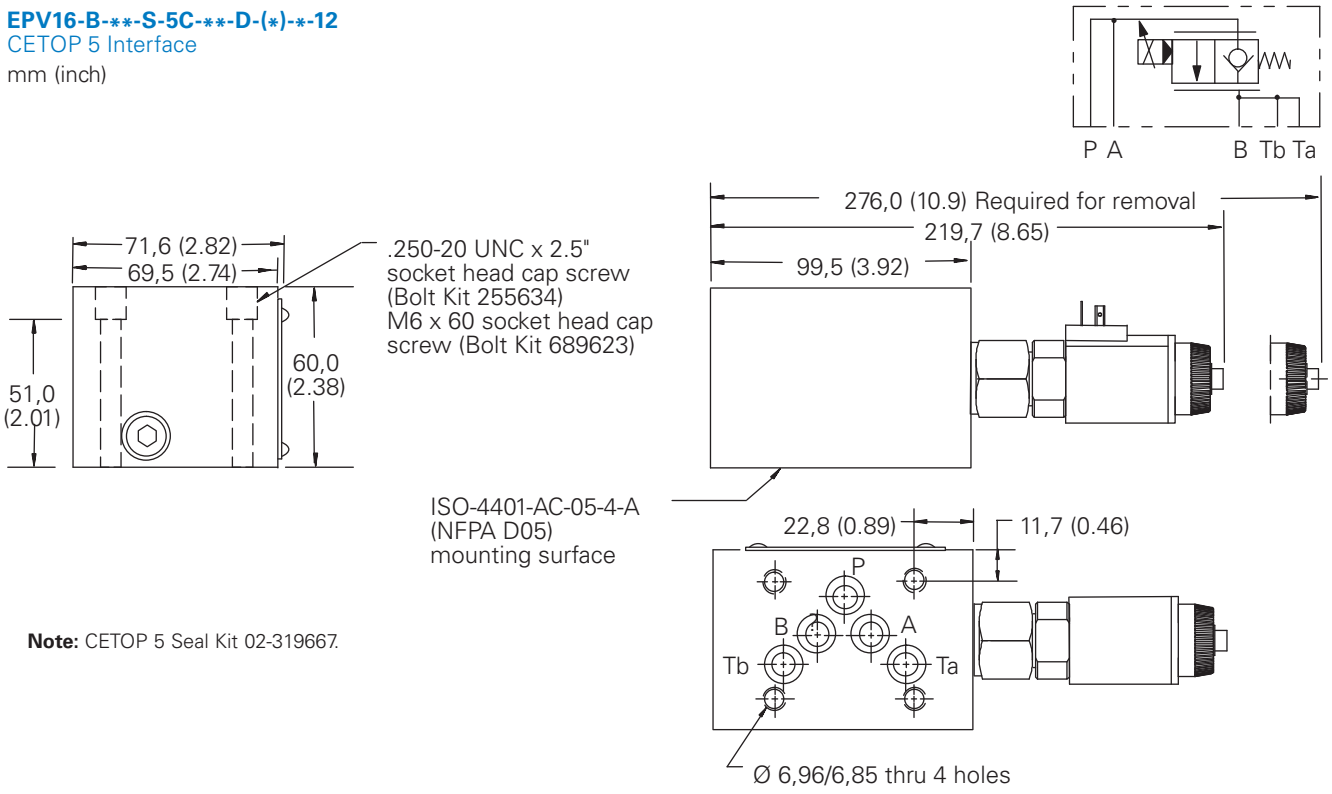

Note: CETOP 5 Seal Kit 02-319667.

Where measurements are critical request certified drawings. We reserve the right to change specifications without notice.

ESV1-8-C - Proportional valve

Proportional flow control, normally closed, poppet
Up to 31 L/min (8 USgpm) • 210 bar (3000 psi)

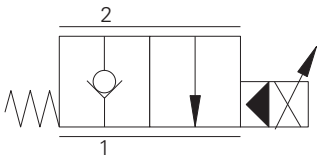

Operation

In the de-energized position, this valve blocks flow from port 2 to port 1and free flow is allowed from port 1 to port 2.

In the energized position, flow from port 1 to port 2 is restricted while free flow is allowed from port 2 to port 1. The valve flow is proportional to the current applied to the coil.

Features

Hardened and ground working parts to give long life and very low leakage. IP69K Tough coil compatibility, continuously rated. Compact design with low pressure drop.

Profile view

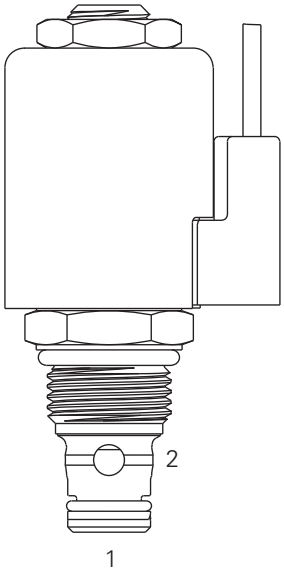

Performance data

Ratings and specifications

Performance data is typical with fluid at 21,8 cST (105 SUS) and 49°C (120°F)	
Typical application pressure	210 bar (3000 psi)
Cartridge endurance rating	1 million cycles
Cartridge fatigue pressure rating (NFPA/T2.6.1 R2-2000)	210 bar (3000 psi)
Rated flow	@ 500 psid, 8.4 gpm min, 9.3 gpm nom
Leakage (fully closed)	5 drops/min max @ 3000 psi
Nominal supply voltage	12/24 VDC
Current to open valve	1350-1450 mA (12V coil), 075-725 mA (24V coil)
Temperature range	-30° to 90°C (-22° to 194°F)
Maximum oil temperature	120°C (248°F)
Maximum internal oil temperature	200°C (392°F)
Cavity	C-8-2
Fluids	All general purpose hydraulic fluids such as: MIL-H-5606, SAE 10, SAE 20, etc.
Filtration	Cleanliness code 18**/16/13**
Housing material (standard)	Aluminum
Hysterisis	1 Usgpm with dither
Weight cartridge only	.11 kg (.24 lbs)
Seal kit	02-165875 (Buna-N), 02-165877 (Viton®)

Viton is a registered trademark of E.I. DuPont

Description

This is a 2 way 2 position, pilot operated poppet type, normally closed, proportional flow control screw in cartridge valve. Ideal for lowering circuits or in conjunction with pressure compensators to provide proportional flow control to any actuator.

Pressure drop curves

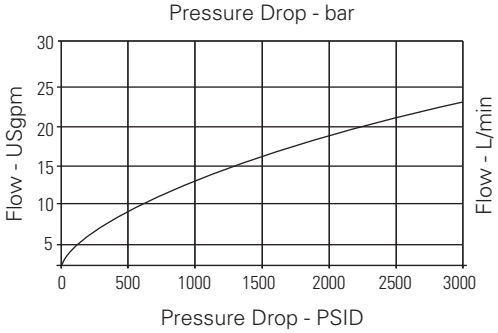

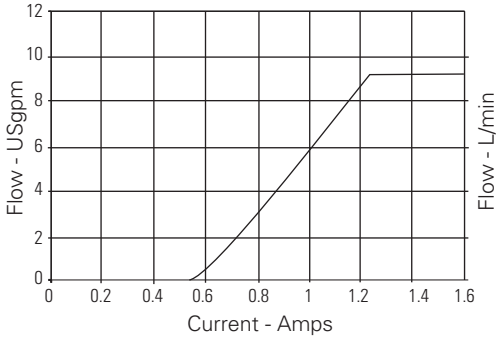

Where measurements are critical request certified drawings. We reserve the right to change specifications without notice.

ESV1-8-C - Proportional Valve

Proportional flow control, normally closed, poppet
Up to 31 L/min (8 USgpm) • 210 bar (3000 psi)

Model code

ESV1	8	–	*	–	C	–	*	–	**	–	**	–	*	–	*	–	*	–	**	–	**
1	2		3		4		5		6		7		8		9		10		11		12

1 Function
ESV1 - Proportional flow control

2 Size
8 - 8 size

3 Seal material
N - Buna-N
V - Viton

4 Style
C - Normally open

5 Housing material
Blank - Cartridge only
A - Aluminum

6 Port size

Code	Port size	Housing number
		Aluminium
0	Cartridge only	
2G	1/4" BSPP	02-160727
3G	3/8" BSPP	02-160728
4T	SAE 4	02-150730
6T	SAE 6	02-160731
8T	SAE 8	02-160732

See section J for housing details.

7 Coil voltage
0 - No coil
12D - 12VDC
24D - 24VDC

8 Type of power
Blank - No coil
D - DC w/o diode
B - DC w/o diode

9 Connector type
Blank - No coil
G - ISO 4400 DIN 43650
Q - Spade Terminals
W - Flying Lead
N - Deutsch (DC only)
Y - Amp JR (DC only)
P - Conduit

For coil part numbers and dimensions see section C.

10 Coil series
Blank - No coil
S - S Series, 20 W

For coil part numbers and dimensions see section C.

11 Coil special features
Blank - No coil
00 - No special feature

12 Valve special features
Blank - None

Dimensions
mm (inch)

Cartridge only

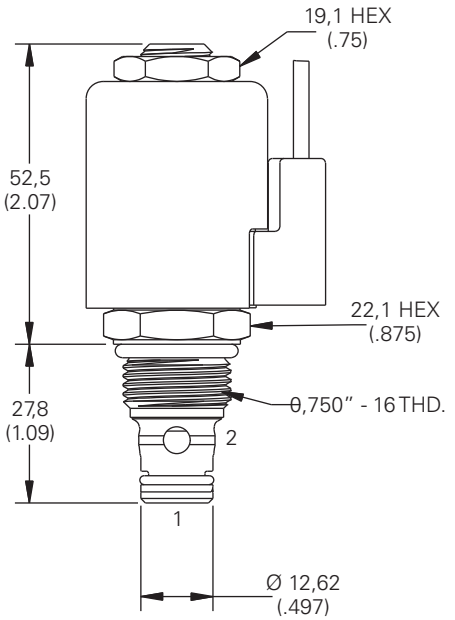

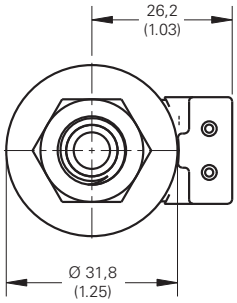

Installation drawing

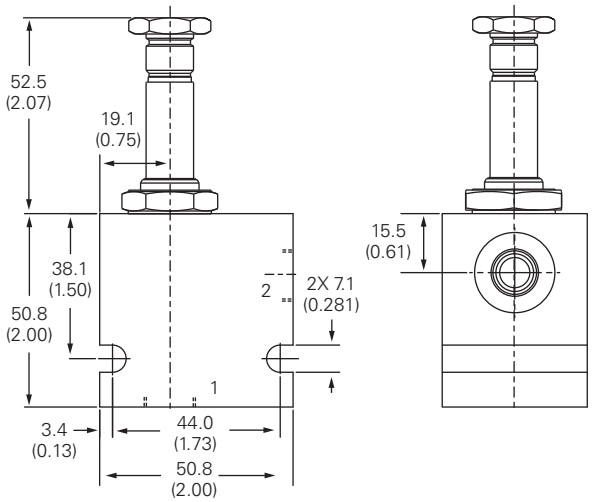

Where measurements are critical request certified drawings. We reserve the right to change specifications without notice.

ESV1-10-C - Proportional valve

Proportional flow control, normally closed, poppet
Up to 70 L/min (18.5 USgpm) • 210 bar (3000 psi)

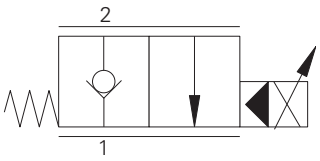

Operation

In the de-energized position, this valve blocks flow from port 2 to port 1and free flow is allowed from port 1 to port 2.

In the energized position, flow from port 1 to port 2 is restricted while free flow is allowed from port 2 to port 1. The valve flow is proportional to the current applied to the coil.

Features

Hardened and ground working parts to give long life and very low leakage. IP69K Tough coil compatibility, continuously rated. Compact design with low pressure drop.

Profile view

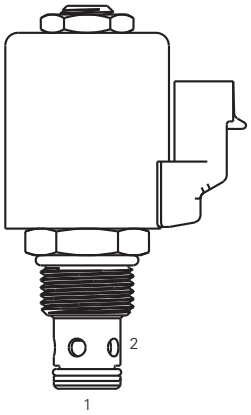

Performance data

Ratings and specifications

Performance data is typical with fluid at 21,8 cST (105 SUS) and 49°C (120°F)	
Typical application pressure	210 bar (3000 psi)
Cartridge endurance rating	1 million cycles
Cartridge fatigue pressure rating (NFPA/T2.6.1 R2-2000)	210 bar (3000 psi)
Rated flow	@ 500 psid, 18.5 gpm min, 19.4 gpm nom
Leakage (fully closed)	5 drops/min max @ 3000 psi
Nominal supply voltage	12/24 VDC
Current to open valve	900-1000 mA (12V coil), 450-500 mA (24V coil)
Temperature range	-30° to 90°C (-22° to 194°F)
Maximum oil temperature	120°C (248°F)
Maximum internal oil temperature	200°C (392°F)
Cavity	C-10-2
Fluids	All general purpose hydraulic fluids such as: MIL-H-5606, SAE 10, SAE 20, etc.
Filtration	Cleanliness code 18/16/13
Housing material (standard)	Aluminum
Hysterisis	1 USgpm with dither
Weight cartridge only	.13 kg (.28 lbs)
Seal kit	0565803 (Buna-N), 0566086 (Viton®)

Viton is a registered trademark of E.I. DuPont

Description

This is a 2 way 2 position, pilot operated poppet type, normally closed, proportional flow control screw in cartridge valve. Ideal for lowering circuits or in conjunction with pressure compensators to provide proportional flow control to any actuator.

Pressure drop curves

Pressure Drop At Max Poppet Opening

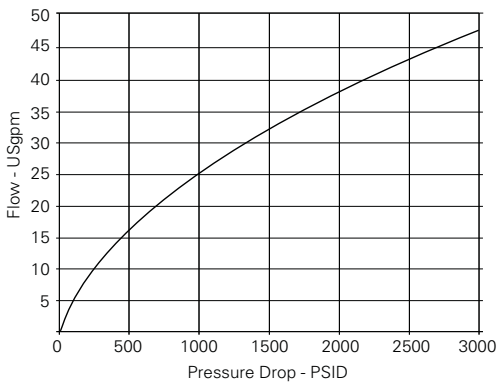

Flow vs. Current at 500 PSID

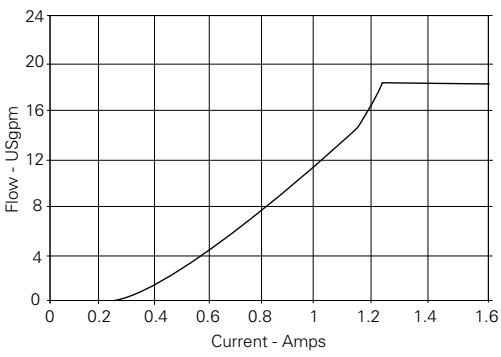

Where measurements are critical request certified drawings. We reserve the right to change specifications without notice.

ESV1-10-C - Proportional valve

Proportional flow control, normally closed, poppet
Up to 70 L/min (18.5 USgpm) • 210 bar (3000 psi)

Model code

ESV1	10	–	*	–	C	–	*	–	**	–	***	–	*	–	*	–	*	–	**	–	**
1	2		3		4		5		6		7		8		9		10		11		12

1 Function
ESV1 - Proportional flow control

2 Size
10 - 10 size

3 Seal material
Blank - Buna-N
V - Viton

4 Style
C - Normally closed

5 Housing material
Blank - Cartridge only
A - Aluminum

6 Port size

Code	Port size	Housing number
		Aluminium
0	Cartridge only	
3B	3/8" BSPP	02-175462
6T	SAE 6	566151
3G	3/8" BSPP	876703
6H	SAE 6	876700
8H	SAE 8	876701

See section J for housing details.

7 Coil voltage
0 - No coil
12D - 12VDC
24D - 24VDC

8 Type of power
Blank - No coil
D - DC w/o diode
B - DC w/o diode

9 Connector type
Blank - No coil
G - ISO 4400 DIN 43650
Q - Spade Terminals
W - Flying Lead
N - Deutsch (DC only)
Y - Amp JR (DC only)
P - Conduit

For coil part numbers and dimensions see section C.

10 Coil series
Blank - No coil
J - J Series, 20 W

For coil part numbers and dimensions see section C.

11 Coil special features
Blank - No coil
00 - No special feature

12 Valve special features
Blank - None

Dimensions
mm (inch)

Cartridge only

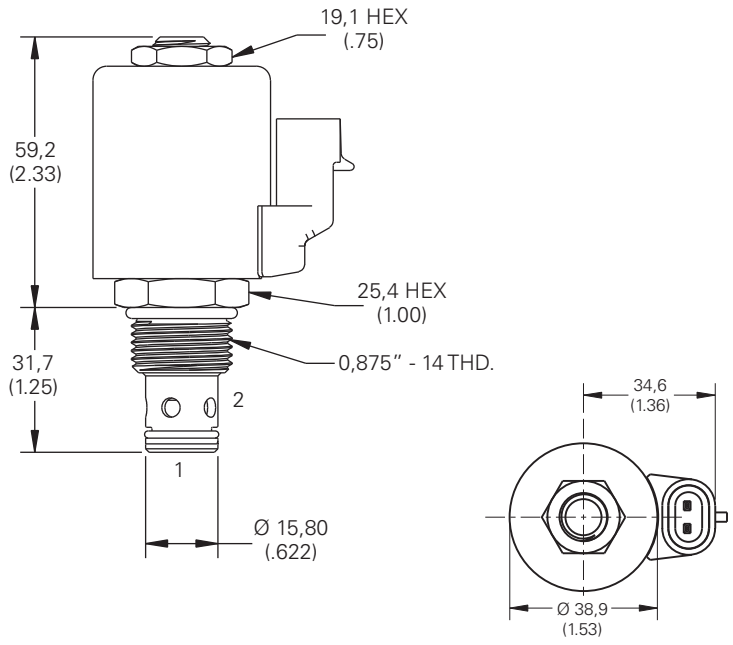

Installation drawing

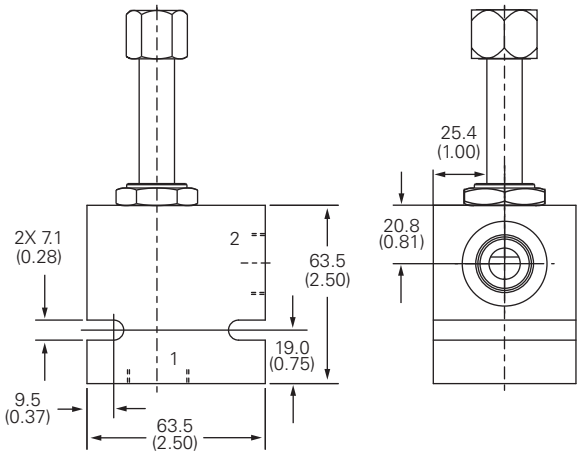

Where measurements are critical request certified drawings. We reserve the right to change specifications without notice.

ESV1-12-C - Proportional valve

Proportional flow control, normally closed, poppet
Up to 104 L/min (27.3 USgpm) • 210 bar (3000 psi)

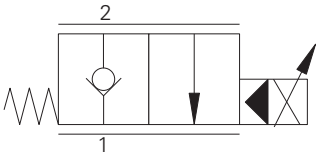

Operation

In the de-energized position, this valve blocks flow from port 2 to port 1and free flow is allowed from port 1 to port 2.

In the energized position, flow from port 1 to port 2 is restricted while free flow is allowed from port 2 to port 1. The valve flow is proportional to the current applied to the coil.

Features

Hardened and ground working parts to give long life and very low leakage. IP69K Tough coil compatibility, continuously rated. Compact design with low pressure drop.

Profile view

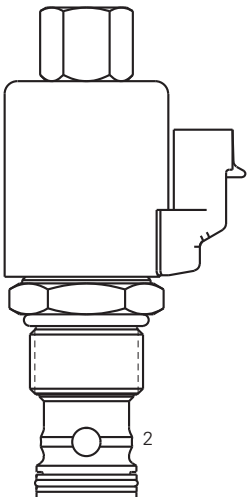

Performance data

Ratings and specifications

Performance data is typical with fluid at 21,8 cST (105 SUS) and 49°C (120°F)	
Typical application pressure	210 bar (3000 psi)
Cartridge endurance rating	1 million cycles
Cartridge fatigue pressure rating (NFPA/T2.6.1 R2-2000)	210 bar (3000 psi)
Rated flow	@ 500 psid, 27.3 gpm min, 28.9 gpm nom
Leakage (fully closed)	5 drops/min max @ 3000 psi
Nominal supply voltage	12/24 VDC
Current to open valve	800-900 mA (12V coil), 400-450 mA (24V coil)
Temperature range	-30° to 90°C (-22° to 194°F)
Maximum oil temperature	120°C (248°F)
Maximum internal oil temperature	200°C (392°F)
Cavity	C-12-2
Fluids	All general purpose hydraulic fluids such as: MIL-H-5606, SAE 10, SAE 20, etc.
Filtration	Cleanliness code 18/16/13
Housing material (standard)	Aluminum
Hysterisis	1 USgpm with dither
Weight cartridge only	.23 kg (.48 lbs)
Seal kit	02-165889 (Buna-N), 02-165888 (Viton®)

Viton is a registered trademark of E.I. DuPont

Description

This is a 2 way 2 position, pilot operated poppet type, normally closed, proportional flow control screw in cartridge valve. Ideal for lowering circuits or in conjunction with pressure compensators to provide proportional flow control to any actuator.

Pressure drop curves

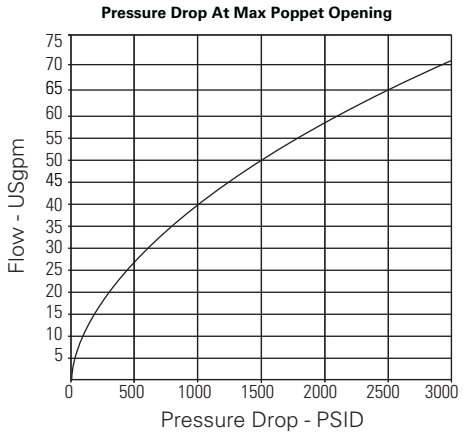

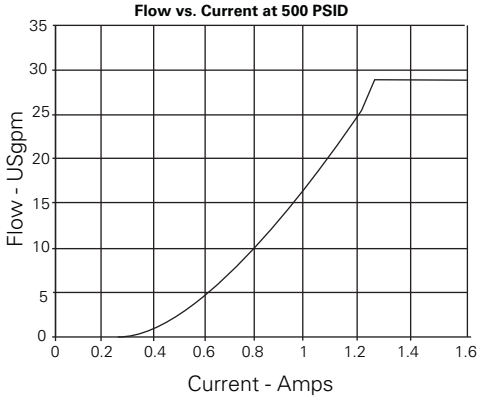

Where measurements are critical request certified drawings. We reserve the right to change specifications without notice.

ESV1-12-C - Proportional valve

Proportional flow control, normally closed, poppet
Up to 104 L/min (27.3 USgpm) • 210 bar (3000 psi)

Model code

ESV1	12	–	*	–	C	–	*	–	****	–	***	–	*	–	*	–	*	–	**	–	**
1	2		3		4		5		6		7		8		9		10		11		12

1 Function
ESV1 - Proportional flow control

2 Size
12 - 12 size

3 Seal material
Blank - Buna-N
V - Viton

4 Style
C - Normally closed

5 Housing material
Blank - Cartridge only
A - Aluminum

6 Port size

Code	Port size	Housing number
		Aluminium single
3	Cartridge only	
4G	1/2" BSPP	02-161118
4GU	1/2" BSPP	02-161116
6G	3/4" BSPP	02-161117
6GU	3/4" BSPP	02-161115
10T	SAE 10	02-160640
10TU	SAE 10	02-160641
12T	SAE 12	02-160644
12TU	SAE 12	02-160645

See section J for housing details.

7 Coil voltage
0 - No coil
12D - 12VDC
24D - 24VDC

8 Type of power
Blank - No coil
D - DC w/o diode
B - DC w/o diode

9 Connector type
Blank - No coil
G - ISO 4400 DIN 43650
Q - Spade Terminals
W - Flying Lead
N - Deutsch (DC only)
Y - Amp JR (DC only)
P - Conduit

For coil part numbers and dimensions see section C.

10 Coil series
Blank - No coil
J - J Series, 20 W

For coil part numbers and dimensions see section C.

11 Coil special features
Blank - No coil
00 - No special feature

12 Valve special features
Blank - None

Dimensions
mm (inch)

Cartridge only

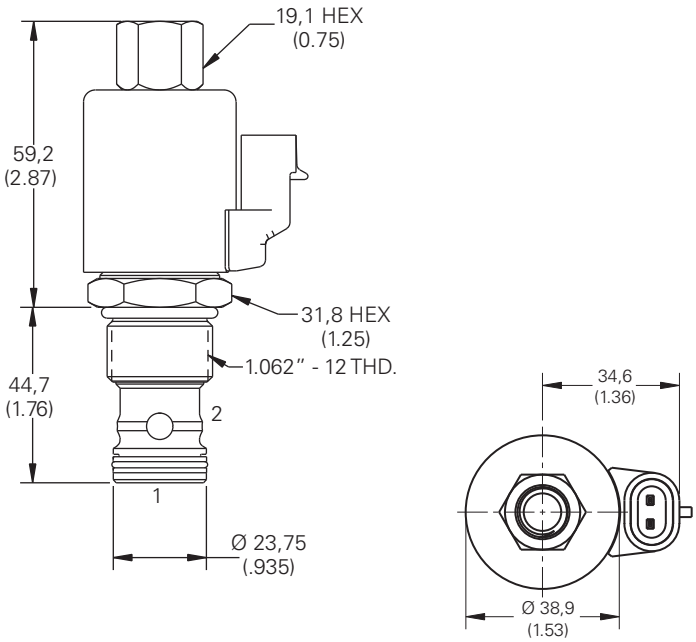

Installation drawing

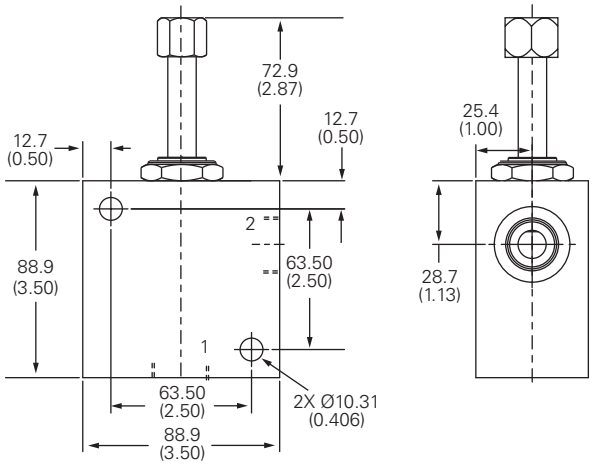

Where measurements are critical request certified drawings. We reserve the right to change specifications without notice.

ESV1-8-O - Proportional valve

Proportional flow control, normally open, poppet
Up to 32 L/min (8.4 USgpm) • 210 bar (3000 psi)

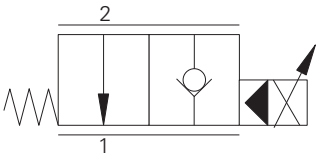

Operation

In the de-energized position, this valve allows free flow from port 2 to port 1 and restricts flow from port 1 to port 2.

In the energized position, flow is blocked from port 2 to port 1, and free flow is allowed from port 1 to port 2. The valve flow is proportional to the current applied to the coil.

Features

Hardened and ground working parts to give long life and very low leakage. IP69K Tough coil compatibility, continuously rated. Compact design with low pressure drop.

Profile view

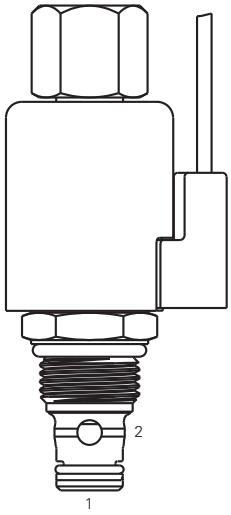

Performance data

Ratings and specifications

Performance data is typical with fluid at 21,8 cST (105 SUS) and 49°C (120°F)	
Typical application pressure (all ports)	210 bar (3000 psi)
Cartridge endurance rating	1 million cycles
Cartridge fatigue pressure rating (NFPA/T2.6.1 R2-2000)	210 bar (3000 psi)
Rated flow	@ 500 psid, 8.4 gpm min, 9.3 gpm nom
Leakage (fully closed)	5 drops/min, max @ 3000 psi
Nominal supply voltage	12/24 VDC
Current to fully close valve	1100-1250 mA (12V coil), 550-625 mA (24V coil)
Temperature range	-30° to 90°C (-22° to 194°F)
Maximum oil temperature	120°C (248°F)
Maximum internal oil temperature	200°C (392°F)
Cavity	C-8-2
Fluids	All general purpose hydraulic fluids such as: MIL-H-5606, SAE 10, SAE 20, etc.
Filtration	Cleanliness code 18/16/13
Housing material (standard)	Aluminum
Hysterisis	1 USgpm with dither
Weight cartridge only	.10 kg (.23 lbs)
Seal kit	02-165875 (Buna-N), 02-165877 (Viton®)

Viton is a registered trademark of E.I. DuPont

Description

This is a 2 way 2 position, pilot operated poppet type, normally open, proportional flow control screw in cartridge valve. Ideal for lowering circuits or in conjunction with pressure compensators to provide proportional flow control to any actuator.

Pressure drop curves

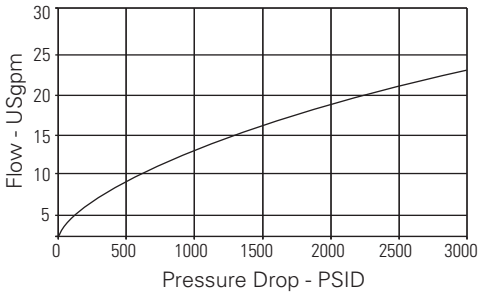

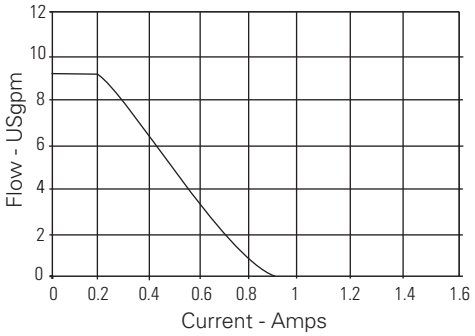

Where measurements are critical request certified drawings. We reserve the right to change specifications without notice.

ESV1-8-O - Proportional valve

Proportional flow control, normally open, poppet
Up to 32 L/min (8.4 USgpm) • 210 bar (3000 psi)

Model code

ESV1	8	–	*	–	O	–	*	–	**	–	***	–	*	–	*	–	*	–	**	–	*
	1		2		3		4		5		6		7		8		9		10		11		12

1 Function
ESV1 - Proportional flow control

2 Size
8 - 8 size

3 Seal material
N - Buna-N
V - Viton

4 Style
O - Normally open

5 Housing material
Blank - Cartridge only
A - Aluminum

6 Port size

Code	Port size	Housing number
		Aluminium
0	Cartridge only	
3G	3/8" BSPP	02-160728
4T	SAE 4	02-160730
6T	SAE 6	02-160731
8T	SAE 8	02-160732

See section J for housing details.

7 Coil voltage
0 - No coil
12D - 12VDC
24D - 24VDC

8 Type of power
Blank - No coil
D - DC w/o diode
B - DC w/o diode

9 Connector type
Blank - No coil
G - ISO 4400 DIN 43650
Q - Spade Terminals
W - Flying Lead
N - Deutsch (DC only)
Y - Amp JR (DC only)
P - Conduit

For coil part numbers and dimensions see section C.

10 Coil series
Blank - No coil
S - S Series, 20 W

For coil part numbers and dimensions see section C.

11 Coil special features
Blank - No coil
00 - No special feature

12 Valve special features
Blank - None

Dimensions
mm (inch)

Cartridge only

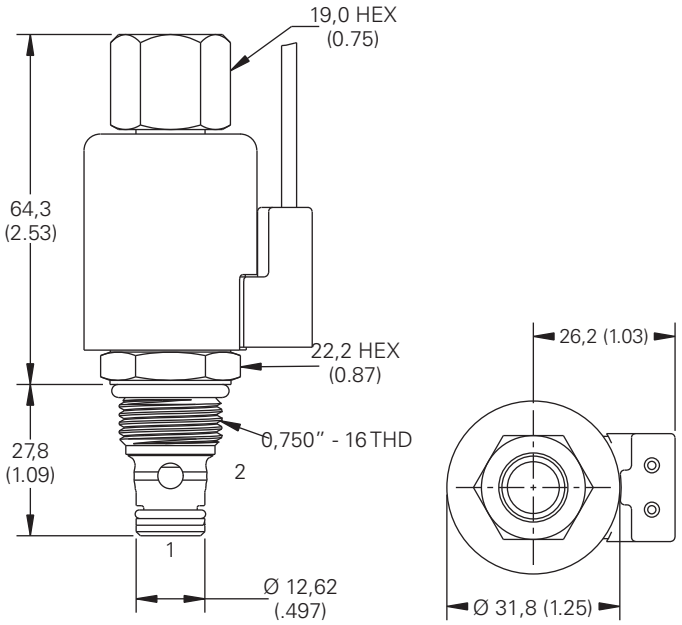

Installation drawing

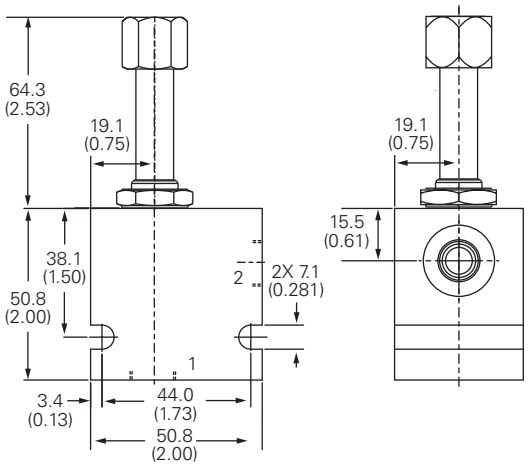

Where measurements are critical request certified drawings. We reserve the right to change specifications without notice.

ESV1-10-O - Proportional valve

Proportional flow control, normally open, poppet
Up to 70 L/min (18.5 USgpm) • 210 bar (3000 psi)

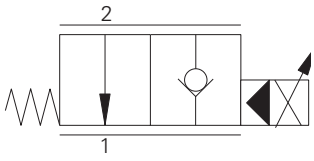

Operation

In the de-energized position, this valve allows free flow from port 2 to port 1 and restricts flow from port 1 to port 2.

In the energized position, flow is blocked from port 2 to port 1, and free flow is allowed from port 1 to port 2. The valve flow is proportional to the current applied to the coil.

Features

Hardened and ground working parts to give long life and very low leakage. IP69K Tough coil compatibility, continuously rated. Compact design with low pressure drop.

Profile view

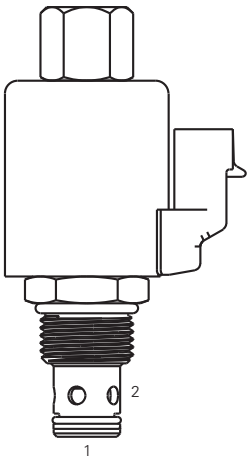

Performance data

Ratings and specifications

Performance data is typical with fluid at 21,8 cST (105 SUS) and 49°C (120°F)	
Typical application pressure	210 bar (3000 psi)
Cartridge endurance rating	1 million cycles
Cartridge fatigue pressure rating (NFPA/T2.6.1 R2-2000)	210 bar (3000 psi)
Rated flow	@ 500 psid, 18.5 gpm min, 19.4 gpm nom
Leakage (fully closed)	5 drops/min, max @ 3000 psi
Nominal supply voltage	12/24 VDC
Current to fully close valve	1000-1200 mA (12V coil), 500-600 mA (24V coil)
Temperature range	-30° to 90°C (-22° to 194°F)
Maximum oil temperature	120°C (248°F)
Maximum internal oil temperature	200°C (392°F)
Cavity	C-10-2
Fluids	All general purpose hydraulic fluids such as: MIL-H-5606, SAE 10, SAE 20, etc.
Filtration	Cleanliness code 18/16/13
Housing material (standard)	Aluminum
Hysterisis	1 USgpm with dither
Weight cartridge only	.14 kg (.30 lbs)
Seal kit	0565803 (Buna-N), 02-165877 (Viton®)

Viton is a registered trademark of E.I. DuPont

Description

This is a 2 way 2 position, pilot operated poppet type, normally open, proportional flow control screw in cartridge valve. Ideal for lowering circuits or in conjunction with pressure compensators to provide proportional flow control to any actuator.

Pressure drop curves

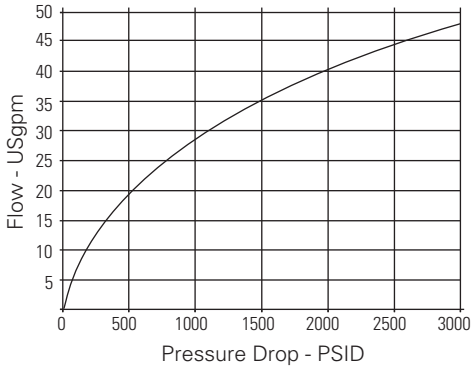

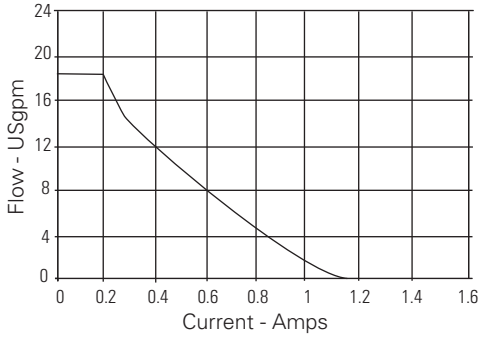

Where measurements are critical request certified drawings. We reserve the right to change specifications without notice.

ESV1-10-O - Proportional valve

Proportional flow control, normally open, poppet
Up to 70 L/min (18.5 USgpm) • 210 bar (3000 psi)

Model code

ESV1	10	–	*	–	O	–	*	–	**	–	***	–	*	–	*	–	*	–	**	–	**
1	2		3		4		5		6		7		8		9		10		11		12

1 Function
ESV1 - Proportional flow control

2 Size
10 - 10 size

3 Seal material
N - Buna-N
V - Viton

4 Style
C - Normally closed

5 Housing material
Blank - Cartridge only
A - Aluminum

6 Port size

Code	Port size	Housing number Aluminium
0	Cartridge only	
3G	3/8" BSPP	876703
6H	SAE 6	876700
8H	SAE 8	876701

See section J for housing details.

7 Coil voltage
0 - No coil
12 - 12VDC
24 - 24VDC

8 Type of power
Blank - No coil
D - DC w/o diode
B - DC w/o diode

9 Connector type
Blank - No coil
G - ISO 4400 DIN 43650
Q - Spade Terminals
W - Flying Lead
N - Deutsch (DC only)
Y - Amp JR (DC only)
P - Conduit

For coil part numbers and dimensions see section C.

10 Coil series
Blank - No coil
J - J Series, 20 W

For coil part numbers and dimensions see section C.

11 Coil special features
Blank - No coil
00 - No special feature

12 Valve special features
Blank - None

Dimensions

mm (inch)

Cartridge only

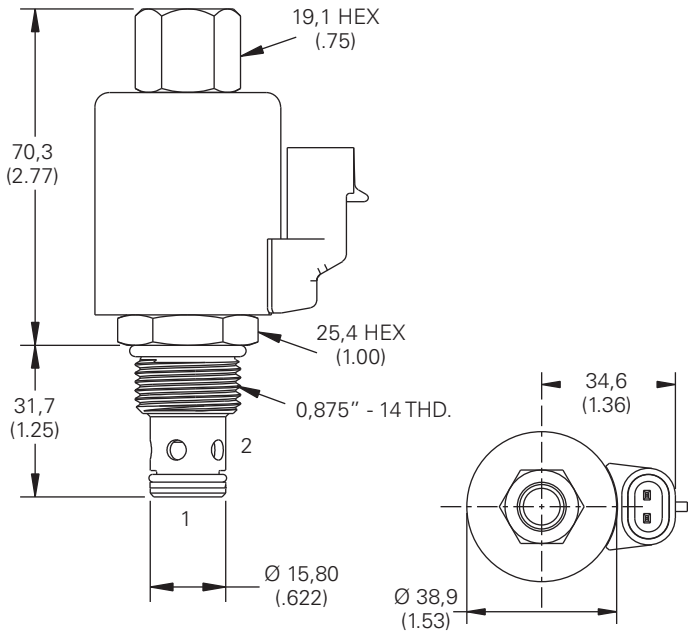

Installation drawing

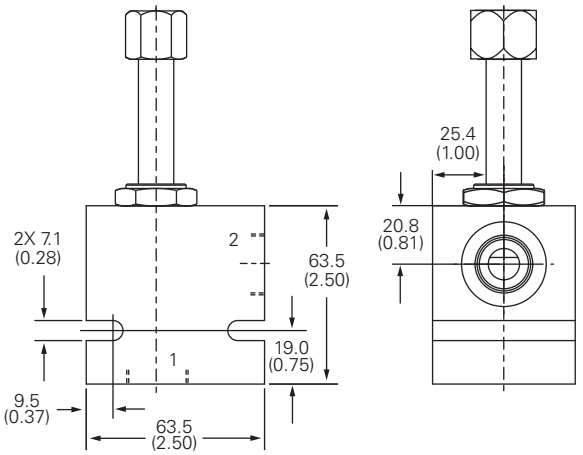

Where measurements are critical request certified drawings. We reserve the right to change specifications without notice.

ESV1-12-O - Proportional valve

Proportional flow control, normally open, poppet
Up to 104 L/min (27.3 USgpm) • 210 bar (3000 psi)

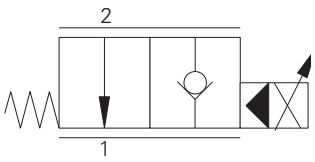

Operation

In the de-energized position, this valve allows free flow from port 2 to port 1 and restricts flow from port 1 to port 2.

In the energized position, flow is blocked from port 2 to port 1, and free flow is allowed from port 1 to port 2. The valve flow is proportional to the current applied to the coil.

Features

Hardened and ground working parts to give long life and very low leakage. IP69K Tough coil compatibility, continuously rated. Compact design with low pressure drop.

Profile view

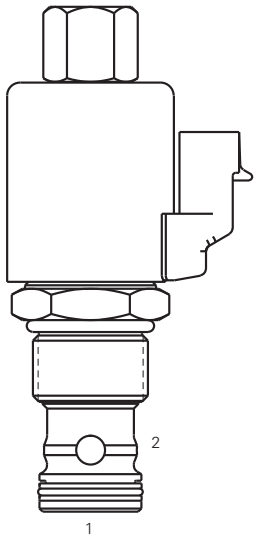

Performance data

Ratings and specifications

Performance data is typical with fluid at 21,8 cST (105 SUS) and 49°C (120°F)	
Typical application pressure	210 bar (3000 psi)
Cartridge endurance rating	1 million cycles
Cartridge fatigue pressure rating (NFPA/T2.6.1 R2-2000)	210 bar (3000 psi)
Rated flow	@ 500 psid, 27.3 gpm min, 28.9 gpm nom
Leakage (fully closed)	5 drops/min max @ 3000 psi
Nominal supply voltage	12/24 VDC
Current to fully close valve	800-900 mA (12V coil), 400-450 mA (24V coil)
Temperature range	-30° to 90°C (-22° to 194°F)
Maximum oil temperature	120°C (248°F)
Maximum internal oil temperature	200°C (392°F)
Cavity	C-12-2
Fluids	All general purpose hydraulic fluids such as: MIL-H-5606, SAE 10, SAE 20, etc.
Filtration	Cleanliness code 18/16/13
Housing material (standard)	Aluminum
Hysterisis	1 USgpm with dither
Weight cartridge only	.10 kg (.23 lbs)
Seal kit	02-165889 (Buna-N), 02-165888 (Viton®)

Viton is a registered trademark of E.I. DuPont

Description

This is a 2 way 2 position, pilot operated poppet type, normally open, proportional flow control screw in cartridge valve. Ideal for lowering circuits or in conjunction with pressure compensators to provide proportional flow control to any actuator.

Pressure drop curves

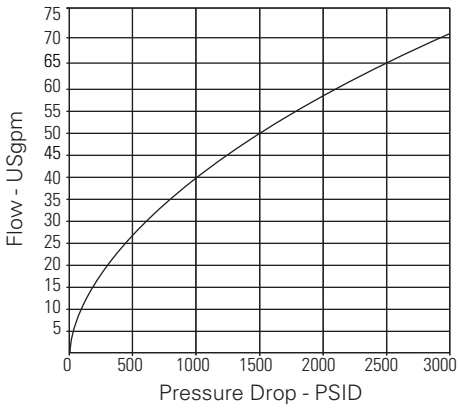

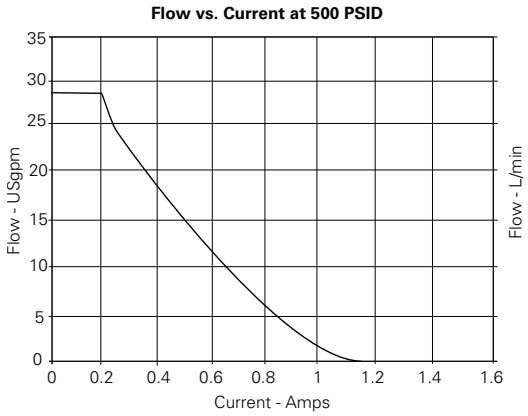

Where measurements are critical request certified drawings. We reserve the right to change specifications without notice.

ESV1-12-O - Proportional valve

Proportional flow control, normally open, poppet
Up to 104 L/min (27.3 USgpm) • 210 bar (3000 psi)

Model code

ESV1	12	–	*	–	O	–	*	–	**	–	**	–	*	–	*	–	*	–	**	–	**
1	2		3		4		5		6		7		8		9		10		11		12

1 Function
ESV1 - Proportional flow control

2 Size
12 - 12 size

3 Seal material
Blank - Buna-N
V - Viton

4 Style
O - Normally open

5 Housing material
Blank - Cartridge only
A - Aluminum

6 Port size

Code	Port size	Housing number
		Aluminium
0	Cartridge only	
6G	3/4" BSPP	02-161117
6GU	3/4" BSPP	02-161115
10T	SAE 10	02-160640
10TU	SAE 10	02-160641
12T	SAE 12	02-160644
12TU	SAE 12	02-160645

See section J for housing details.

7 Coil voltage
0 - No coil
12 -12VDC
24 - 24VDC

8 Type of power
Blank - No coil
D - 1DC w/o diode
B - DC w/o diode

9 Connector type
Blank - No coil
G - ISO 4400 DIN 43650
Q - Spade Terminals
W -Flying Lead
N - Deutsch (DC only)
Y - Amp JR (DC only)
P - Conduit

For coil part numbers and dimensions see section C.

10 Coil series
Blank - No coil
J - J Series, 20 W

For coil part numbers and dimensions see section C.

11 Coil special features
Blank - No coil
00 - No special feature

12 Valve special features
Blank - None

Dimensions

mm (inch)

Cartridge only

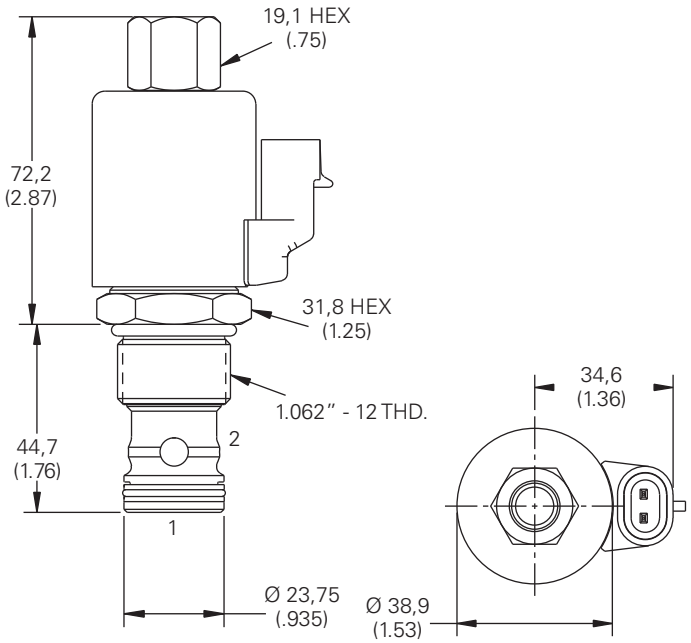

Installation drawing

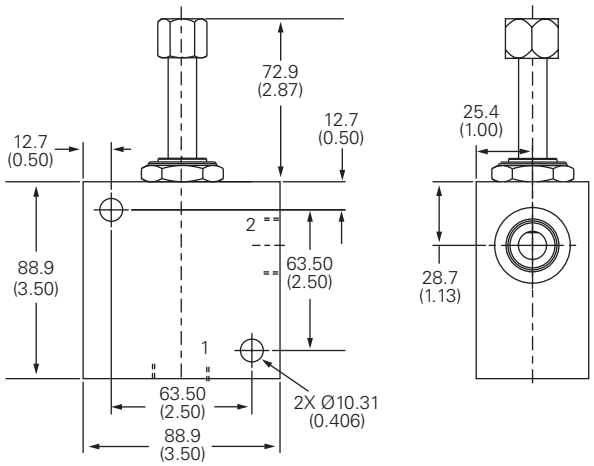

Where measurements are critical request certified drawings. We reserve the right to change specifications without notice.

EFV1-10-C - Proportional valve

Proportional flow, normally open, poppet
Up to 38 L/min (10 USgpm) • 210 bar (3000 psi)

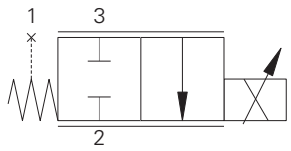

Profile view

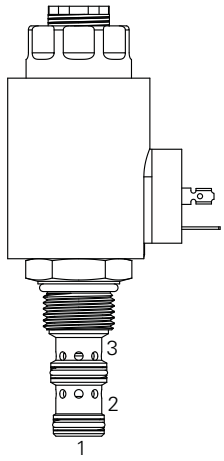

Description

This is a 2 way 2 position, pilot operated spool type, normally closed, proportional flow control screw in cartridge valve. Ideal for speed control and in conjunction with pressure compensators to provide proportional pressure compensated flow control to any actuator.

Operation

The valve is controlled by current supplied to the coil. At zero current, the valve is fully closed from port 3 to port 2. At 1500 mA (12V coil) the valve is considered fully open. This is the maximum intended current level for use in applications. Port 1 is used for pressure balancing the spool and armature and must be blocked in all cases. The maximum intended pressure drop is 300 PSID. At pressure drops above 300 PSID, almost no increase in flow is obtained. The intended flow direction is from port 3 to port 2.

Operation of the valve with flow from port 2 to port 3 will produce flow vs current and flow vs pressure drop curves that are significantly different from those obtained with flow from port 3 to port 2. Since the spool and armature are pressure balanced, the operating pressure does not affect the operating characteristics of the valve. The operating point of the valve is determined only by current, pressure drop and temperature.

Features

Hardened and ground working parts to give long life with good control; Compact design with low pressure drop.IP69K Tough coil compatibility, continuously rated.

Performance data

Ratings and specifications

Performance data is typical with fluid at 21,8 cST (105 SUS) and 49°C (120°F)	
Typical application pressure	210 bar (3000 psi)
Cartridge endurance rating	1million cycles
Cartridge fatigue pressure (infinite life)	210 bar (3000 psi) NFPA rated
Rated flow	Flow rating "A" 15.1 L/min (4 USgpm) Flow rating "B" 30.2 L/min (8 USgpm) Flow rating "C" 37.9 L/min (10 USgpm)
Internal leakage	197 cm^3/min (12in^3/min) @ 3000 PSID
Nominal supply voltage	12/24 V
Current to fully close valve	1500-1600 mA (12V coil), 750-800 mA (24V coil)
Recommended PWM frequency	200-400 Hz
Coil resistance	4.7v V/12V, 19.0V/24V
Mass	Cartridge only 0,37 kg (0.82 lb), cartridge with coil and end nut 0,73 kg (1.62 lb)
Temperature range	-30° to 90°C (-22° to 194°F)
Maximum oil temperature	120°C (248°F)
Maximum internal coil temperature	200°C (392°F)
Cavity	C-10-3
Fluids	All general purpose hydraulics fluids such as: MIL-H-5606, SAE 10, SAE 20, DTE 24, etc.
Filtration	Cleanliness code 18/16/13
Housing material (standard)	Aluminum or steel
Hysterisis	1 USgpm with 400Hz PWM driver
Seal kit	9900225-000 (Buna-N), 9900226-000 (Viton®)

Viton is a registered trademark of E.I. DuPont

Where measurements are critical request certified drawings. We reserve the right to change specifications without notice.

Max Flow vs. Pressure drop
Flow rating "A" at zero current

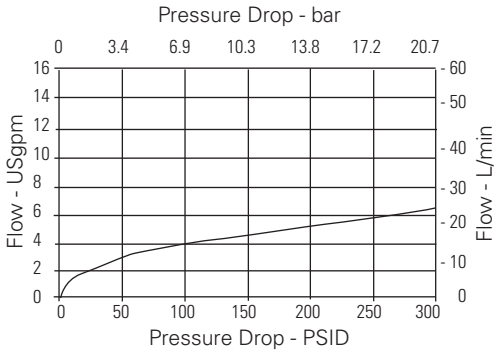

Max Flow vs. Pressure drop
Flow rating "B" at zero current

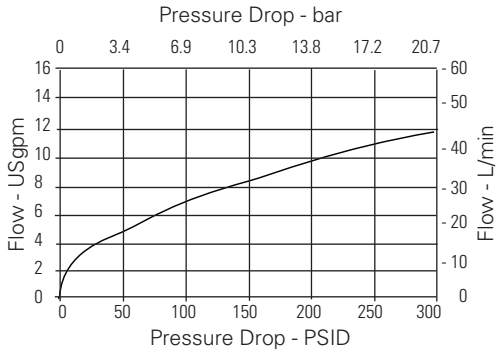

Max Flow vs. Pressure drop
Flow rating "C" at zero current

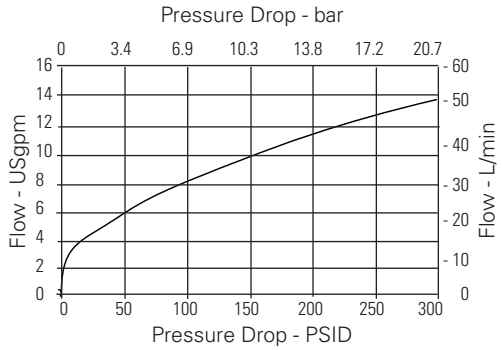

Note: To determine operating characteristics for the flow rating selected, at a specific differential pressure, first determine maximum flow from upper curve at the differential pressure value. This will be the "100%" flow on the lower curve.

Flow vs. Current

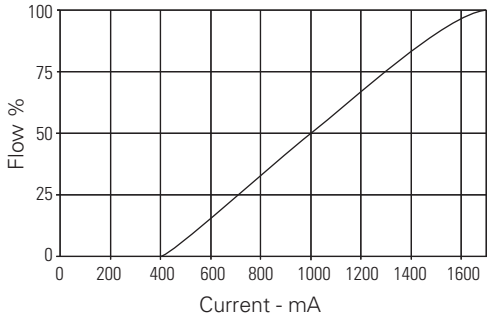

Parameters: 400 Hz PWM

EFV1-10-C - Proportional valve

Proportional flow, normally open, poppet
Up to 38 L/min (10 USgpm) • 210 bar (3000 psi)

Model Code

EFV1	–	10	*	–	C	–	*	–	*	–	*	–	***	–	*****E**	–	00
1		2	3		4		5		6		7		8		9		10

1 Function

EFV1 - Electro proportional flow control valve

2 Size

10 - 10 size

3 Seal material

N - Buna-N
V - Viton®

4 Logic

C - Normally closed

5 Flow rating

A - 4 USgpm @ 160 PSID
B - 8 USgpm @ 160 PSID
C - 10 USgpm @ 160 PSID

6 Manual override option

0 - No core tube special features
S - Screw-in

7 Valve housing material

Blank - Cartridge only
A - Aluminum
S - Steel

8 Port size

Code	Port size	Housing number	
		Aluminium single	Steel single
0	Cartridge only		
3B	3/8" BSPP	02-173358*	
6T	SAE 6	566162*	02-175124
8T	SAE 8		02-175125
2G	1/4" BSPP	876705	02-175127
3G	3/8" BSPP	876714	02-175128
6H	SAE 6	876704	
8H	SAE 8	876711	

Note: Both the manifold and port plug are required.
See section J for housing details.
*Aluminum – Light duty.

9 Coil series

E - E series coils

*These model digits will not be stamped on the valve.

For coil part numbers and dimensions see section C.

10 Special features

00 - None

Only required when valve has special features, omitted if "00".

Where measurements are critical request certified drawings. We reserve the right to change specifications without notice.

Dimensions
mm (inch)

Torque cartridge in housing
S - 68-75 Nm (50-55 ft lbs)
A - 47-54 Nm (35-40 ft lbs)

Note: S type manual override shown. DIN 43650 connector shown.

Note: Port 1 is unused and must be plugged.

Cartridge only

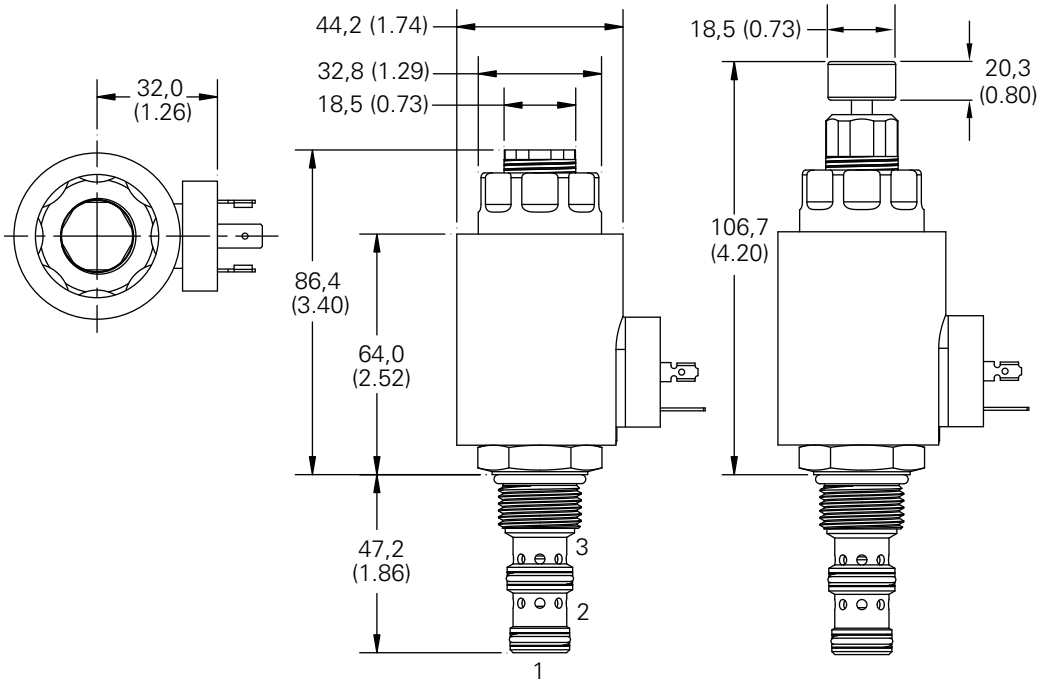

Installation drawing (Aluminum)

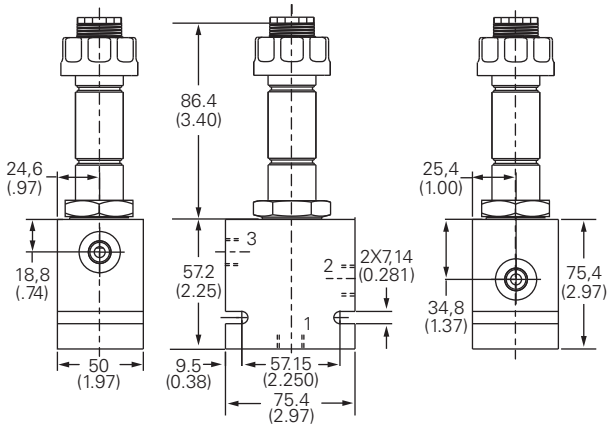

Where measurements are critical request certified drawings. We reserve the right to change specifications without notice.

EFV1-12-C - Proportional valve

Proportional flow, normally closed spool
Up to 77 L/min (20.6 USgpm) • 210 bar (3000 psi)

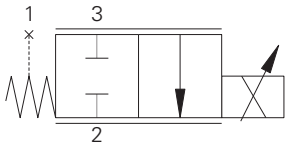

Profile view

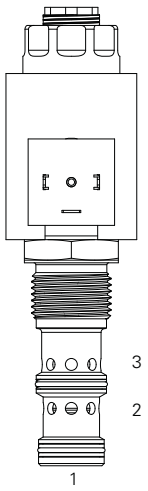

Description

This is a 2 way 2 position, pilot operated spool type, normally closed, proportional flow control screw in cartridge valve. Ideal for speed control and in conjunction with pressure compensators to provide proportional pressure compensated flow control to any actuator.

Operation

The valve is controlled by current supplied to the coil. At zero current, the valve is fully closed from port 3 to port 2. At 1500 mA (12V coil) the valve is considered fully open. This is the maximum intended current level for use in applications. Port 1 is used for pressure balancing the spool and armature and must be blocked in all cases. The maximum intended pressure drop is 300 PSID. At pressure drops above 300 PSID, almost no increase in flow is obtained. The intended flow direction is from port 3 to port 2.

Operation of the valve with flow from port 2 to port 3 will produce flow vs current and flow vs pressure drop curves that are significantly different from those obtained with flow from port 3 to port 2. Since the spool and armature are pressure balanced, the operating pressure does not affect the operating characteristics of the valve. The operating point of the valve is determined only by current, pressure drop and temperature.

Features

Hardened and ground working parts to give long life with good control; Compact design with low pressure drop.IP69K Tough coil compatibility, continuously rated.

Performance data

Ratings and specifications

Performance data is typical with fluid at 21,8 cST (105 SUS) and 49°C (120°F)	
Typical application pressure	210 bar (3000 psi)
Cartridge endurance rating	1million cycles
Cartridge fatigue pressure (infinite life)	210 bar (3000 psi) NFPA rated
Rated flow	Flow rating "A" 55 L/min (14.3 USgpm) Flow rating "B" 77 L/min (20.6 USgpm)
Internal leakage (fully closed)	77-483 cm^3/min (5-30 in^3/min) @ 210 bar (3000 PSID)
Nominal supply voltage	12/24 V
Current to fully close valve	1500-1600 mA (12V coil), 750-800 mA (24V coil)
Recommended dither frequency	200-400 Hz
Coil resistance	4.7v V/12V, 19.0V/24V
Mass	Cartridge only 0,37 kg (0.82 lb), cartridge with coil and end nut 0,73 kg (1.62 lb)
Temperature range	-30° to 90°C (-22° to 194°F)
Maximum oil temperature	120°C (248°F)
Maximum internal coil temperature	200°C (392°F)
Cavity	C-12-3
Fluids	All general purpose hydraulics fluids such as: MIL-H-5606, SAE 10, SAE 20, DTE 24, etc.
Filtration	Cleanliness code 18/16/13
Housing material (standard)	Aluminum or steel
Hysterisis	1 USgpm with 400Hz PWM driver
Seal kit	9900171-000 (Buna-N), 9900172-000 (Viton®)

Viton is a registered trademark of E.I. DuPont

Where measurements are critical request certified drawings. We reserve the right to change specifications without notice.

Max flow vs. Pressure drop
Flow rating "A" at zero current

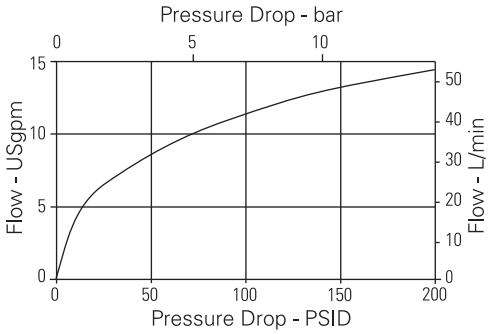

Max flow vs. Pressure drop
Flow rating "B" at zero current

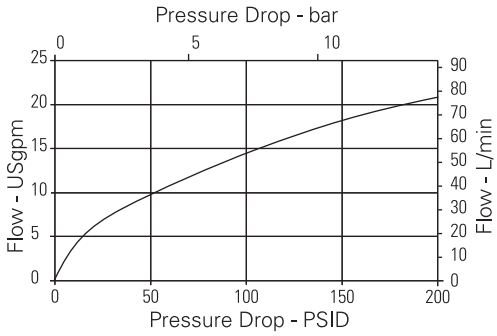

Flow vs. Current

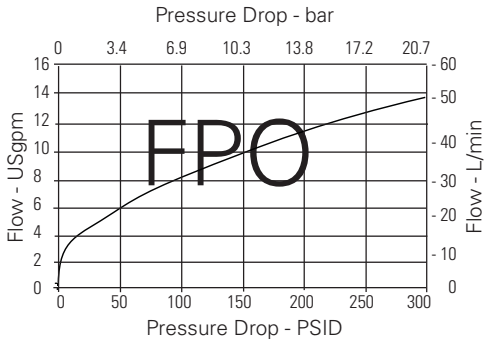

Note: To determine operating characteristics for the flow rating selected, at a specific differential pressure, first determine maximum flow from upper curve at the differential pressure value. This will be the "100%" flow on the lower curve.

Parameters: 400 Hz PWM

EFV1-12-C - Proportional valve

Proportional flow, normally closed spool
Up to 77 L/min (20.6 USgpm) • 210 bar (3000 psi)

Model code

EFV1 – 12 – * – C – * – * – * – * – *****E** – 00**

1 2 3 4 5 6 7 8 9 10

1 Function

EFV1 - Electro proportional flow control valve

2 Size

12 - 12 size

3 Seal material

N - Buna-N
V - Viton®

4 Logic

C - Normally closed

5 Flow rating

A - 14.3 USgpm @ 300 PSID
B - 20.6 USgpm @ 300 PSID

6 Manual override option

0 - No core tube special features
S - Screw-in

7 Valve housing material

Blank - Cartridge only
A - Aluminum
S - Steel

8 Port size

Code	Port size	Housing number	
		Aluminium single	Steel single
0	Cartridge only		
4G	1/2" BSPP	02-161817	02-169815
6G	3/4" BSPP	02-161816	02-169814
10T	SAE 10	02-160642	02-161070
12T	SAE 12	02-160646	02-169816

Note: Both the manifold and port plug are required.
See section J for housing details.

9 Coil series

E - E series coils

*These model digits will not be stamped on the valve.

For coil part numbers and dimensions see section C.

10 Special features

00 - None

Only required when valve has special features, omitted if "00".

Where measurements are critical request certified drawings. We reserve the right to change specifications without notice.

Dimensions

mm (inch)

Torque cartridge in steel housing
S - 136-149 Nm (100-110 ft lbs)
A - 108-122 Nm (80-90 ft lbs)

Note: Port 1 is unused and must be plugged.

Note: EFV1-12 with DIN-43650 connector shown.

Cartridge only

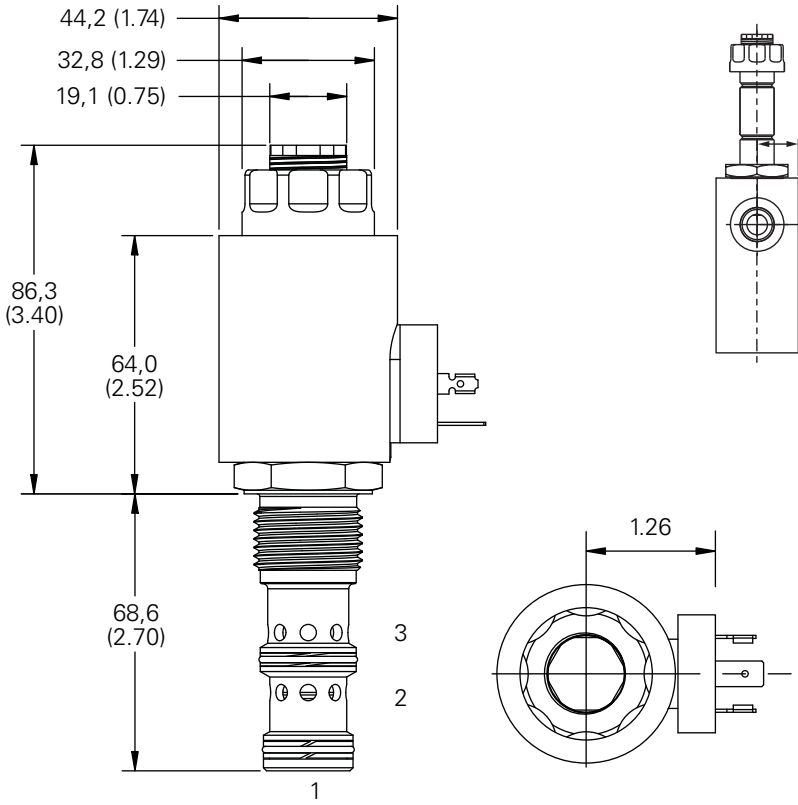

Installation drawing (Aluminum)

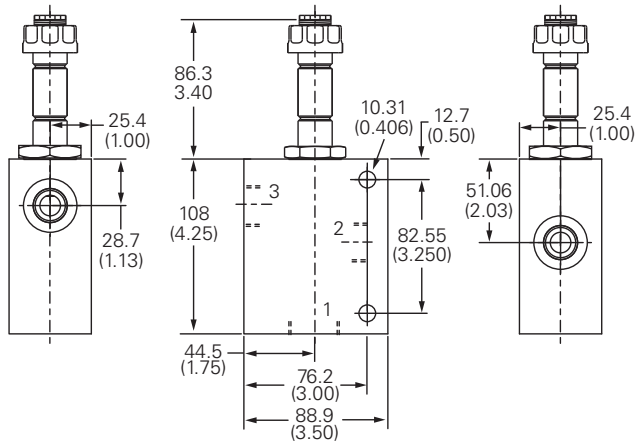

Where measurements are critical request certified drawings. We reserve the right to change specifications without notice.

EFV1-10-O - Proportional valve

Proportional flow, normally open, poppet
Up to 38 L/min (10 USgpm) • 210 bar (3000 psi)

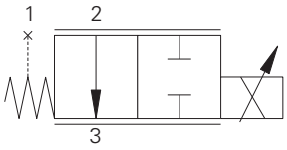

Operation

The valve is controlled by current supplied to the coil. At zero current, the valve is fully open from port 2 to port 3. At 1500 to 1600 mA (12V coil) the valve is fully closed. Port 1 is used for pressure balancing the spool and armature and must be blocked in all cases. The maximum intended pressure drop is 300 PSID. At pressure drops above 300 PSID, almost no increase in flow is obtained. The intended flow direction is from port 2 to port 3.

Operation of the valve with flow from port 3 to port 2 will produce flow vs current and flow vs pressure drop curves that are significantly different from those obtained with flow from port 2 to port 3. Since the spool and armature are pressure balanced, the operating pressure does not affect the operating characteristics of the valve. The operating point of the valve is determined only by current, pressure drop and temperature.

Features

Hardened and ground working parts to give long life with good control; Compact design with low pressure drop.IP69K Tough coil compatibility, continuously rated.

Profile view

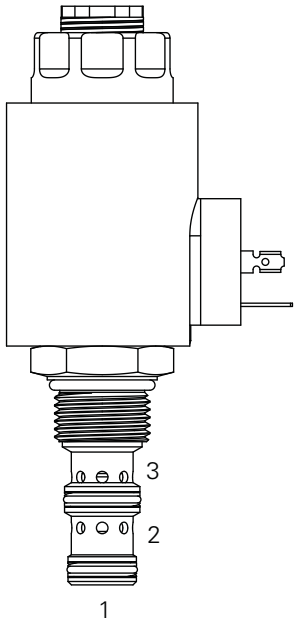

Performance data

Ratings and specifications

Performance data is typical with fluid at 21,8 cST (105 SUS) and 49°C (120°F)	
Typical application pressure	210 bar (3000 psi)
Cartridge endurance rating	1million cycles
Cartridge fatigue pressure (infinite life)	210 bar (3000 psi) NFPA rated
Rated flow	Flow rating "A" 15.1 L/min (4 USgpm) Flow rating "B" 30.2 L/min (8 USgpm) Flow rating "C" 37.9 L/min (10 USgpm)
Internal leakage	197 cm^3/min (12in^3/min) @ 210 (3000 PSID)
Nominal supply voltage	12/24 V
Current to fully close valve	1500-1600 mA (12V coil), 750-800 mA (24V coil)
Recommended PWM frequency	200-400 Hz
Coil resistance	4.7v V/12V, 19.0V/24V
Mass	Cartridge only 0,37 kg (0.82 lb), cartridge with coil and end nut 0,73 kg (1.62 lb)
Temperature range	-30° to 90°C (-22° to 194°F)
Maximum oil temperature	120°C (248°F)
Maximum internal coil temperature	200°C (392°F)
Cavity	C-10-3
Fluids	All general purpose hydraulics fluids such as: MIL-H-5606, SAE 10, SAE 20, DTE 24, etc.
Filtration	Cleanliness code 18/16/13
Housing material (standard)	Aluminum or steel
Hysterisis	1 USgpm with 400Hz PWM driver
Seal kit	9900225-000 (Buna-N), 9900226-000 (Viton®)

Viton is a registered trademark of E.I. DuPont

Description

This is a 2 way 2 position, pilot operated spool type, normally open, proportional flow control screw in cartridge valve. Ideal for speed control and in conjunction with pressure compensators to provide proportional pressure compensated flow control to any actuator.

Pressure drop curves

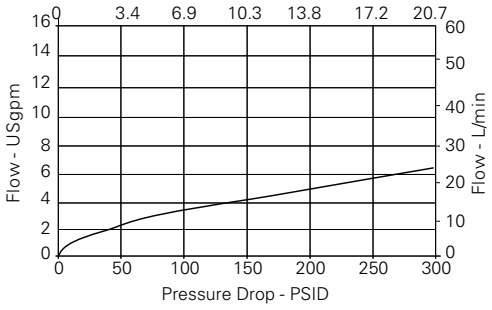

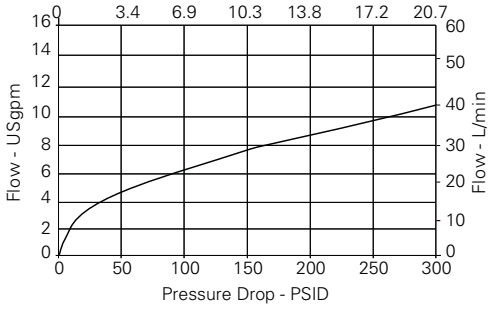

Where measurements are critical request certified drawings. We reserve the right to change specifications without notice.

Max. flow vs Pressure drop
Flow rating "A" (Valve fully open)

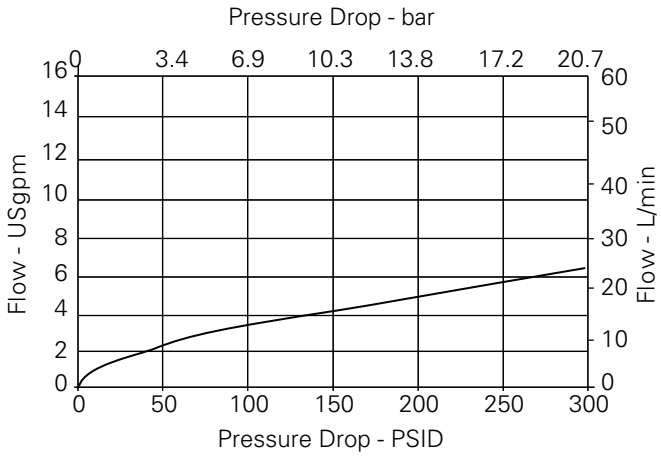

Max. flow vs Pressure drop
Flow rating "B" (Valve fully open)

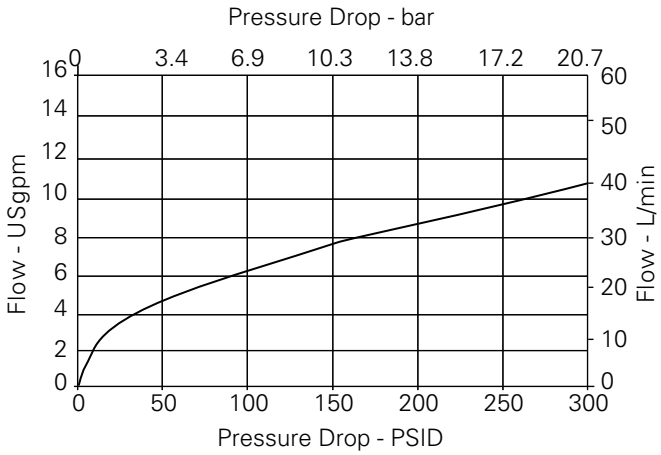

Max. flow vs Pressure drop
Flow rating "C" (Valve fully open)

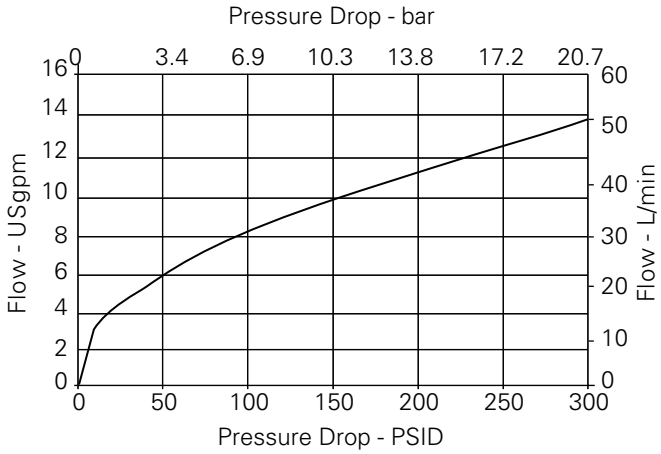

Flow vs. Current

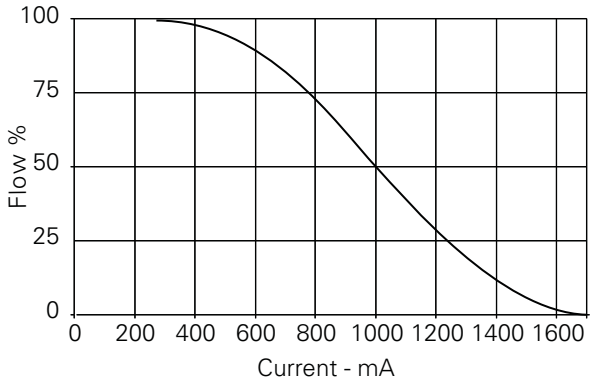

Note: To determine operating characteristics for the flow rating selected, at a specific differential pressure, first determine maximum flow from upper curve at the differential pressure value. This will be the "100% flow" flow on the lower curve.

Parameters: 400 Hz PWM

EFV1-10-O - Proportional valve

Proportional flow, normally open, poppet
Up to 38 L/min (10 USgpm) • 210 bar (3000 psi)

Model code

EFV1 – 10 – * – 0 – * – * – * – * – *****E** – 00**

1 2 3 4 5 6 7 8 9 10

1 Function

EFV1 - Electro proportional flow control valve

2 Size

10 - 10 size

3 Seal material

N - Buna-N
V - Viton®

4 Logic

0 - Normally open

5 Flow rating

A - 4 USgpm @ 160 PSID
B - 8 USgpm @ 160 PSID
C - 10 USgpm @ 160 PSID

6 Manual override option

0 - No core tube special features
S - Screw-in

7 Valve housing material

Blank - Cartridge only
A - Aluminum
S - Steel

8 Port size

Code	Port size	Housing number	
		Aluminium single	Steel single
0	Cartridge only		
3B	3/8" BSPP	02-173358*	
6T	SAE 6	566162*	02-175124
8T	SAE 8		02-175125
3G	3/8" BSPP	876714	02-175128
6H	SAE 6	876704	
8H	SAE 8	876711	

Note: Both the manifold and port plug are required.
See section J for housing details.
*Aluminum – Light duty.

9 Coil series

E - E series coils

*These model digits will not be stamped on the valve.

For coil part numbers and dimensions see section C.

10 Special features

00 - None

Only required when valve has special features, omitted if "00".

Where measurements are critical request certified drawings. We reserve the right to change specifications without notice.

Dimensions

mm (inch)

Torque cartridge in housing

S - 68-75 Nm (50-55 ft lbs)

A - 47-54 Nm (35-40 ft lbs)

Note: S type manual override shown. DIN 43650 connector shown.

Note: Port 1 is unused and must be plugged.

Cartridge only

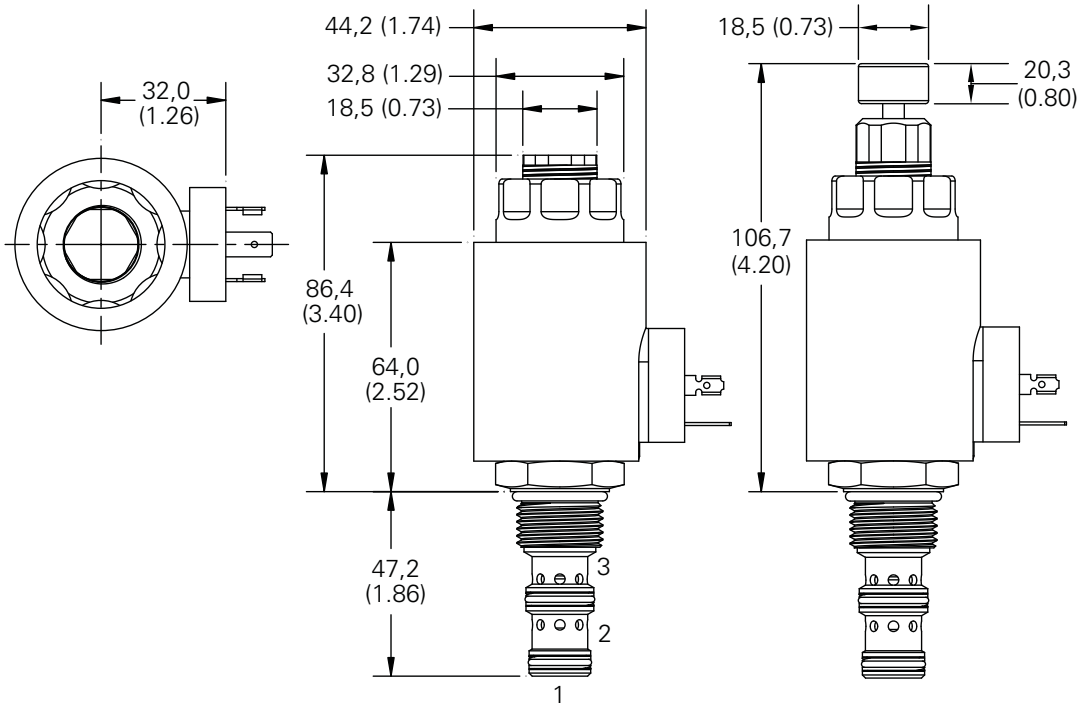

Installation drawing (Aluminum)

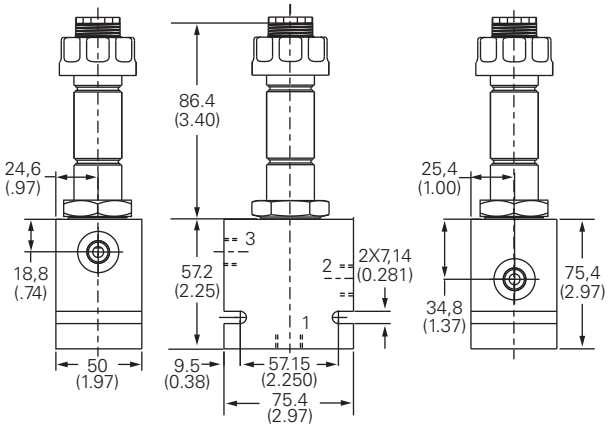

Where measurements are critical request certified drawings. We reserve the right to change specifications without notice.

EFV1-12-O - Proportional valve

Proportional flow, normally open spool
Up to 104 L/min (27.5 USgpm) • 210 bar (3000 psi)

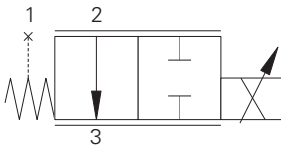

Profile view

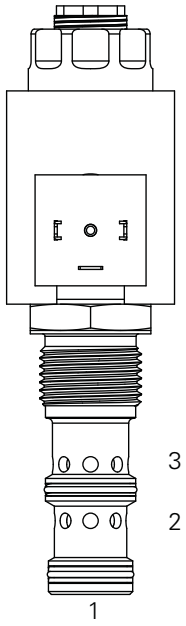

Description

This is a 2 way 2 position, pilot operated spool type, normally open, proportional flow control screw in cartridge valve. Ideal for speed control and in conjunction with pressure compensators to provide proportional pressure compensated flow control to any actuator.

Operation

The valve is controlled by current supplied to the coil. At zero current, the valve is fully open from port 2 to port 3. At 1500 to 1600 mA (12V coil) the valve is fully closed. Port 1 is used for pressure balancing the spool and armature and must be blocked in all cases. The maximum intended pressure drop is 300 PSID. At pressure drops above 300 PSID, almost no increase in flow is obtained. The intended flow direction is from port 2 to port 3.

Operation of the valve with flow from port 3 to port 2 will produce flow vs current and flow vs pressure drop curves that are significantly different from those obtained with flow from port 2 to port 3. Since the spool and armature are pressure balanced, the operating pressure does not affect the operating characteristics of the valve. The operating point of the valve is determined only by current, pressure drop and temperature.

Features

Hardened and ground working parts to give long life with good control; Compact design with low pressure drop.IP69K Tough coil compatibility, continuously rated.

Performance data

Ratings and specifications

Performance data is typical with fluid at 21,8 cST (105 SUS) and 49°C (120°F)	
Typical application pressure	210 bar (3000 psi)
Cartridge endurance rating	1million cycles
Cartridge fatigue pressure (infinite life)	210 bar (3000 psi) NFPA rated
Rated flow	Flow rating "A" 95 L/min (25 USgpm) Flow rating "B" 104 L/min (27.5 USgpm)
Internal leakage (fully closed)	77-483 cm^3/min (5-30 in^3/min) @ 210 bar (3000 PSID)
Nominal supply voltage	12/24 V
Current to fully close valve	1500-1600 mA (12V coil), 750-800 mA (24V coil)
Recommended PWM frequency	200-400 Hz
Coil resistance	4.7v V/12V, 19.0 V/24V
Mass	Cartridge only 0,37 kg (0.82 lb), cartridge with coil and end nut 0,73 kg (1.62 lb)
Temperature range	-30° to 90°C (-22° to 194°F)
Maximum oil temperature	120°C (248°F)
Maximum internal coil temperature	200°C (392°F)
Cavity	C-12-3
Fluids	All general purpose hydraulics fluids such as: MIL-H-5606, SAE 10, SAE 20, etc.
Filtration	Cleanliness code 18/16/13
Housing material (standard)	Aluminum or steel
Hysterisis	1 USgpm with 400Hz PWM driver
Seal kit	9900171-000 (Buna-N), 9900172-000 (Viton®)

Viton is a registered trademark of E.I. DuPont

Where measurements are critical request certified drawings. We reserve the right to change specifications without notice.

Max. flow vs Pressure drop
Flow rating "A" (Zero Current)

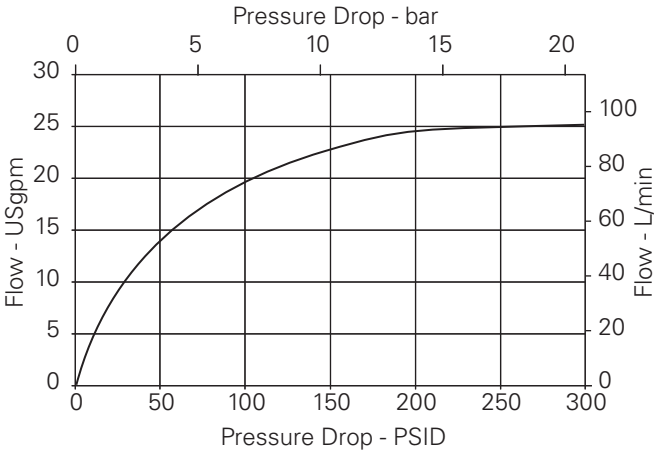

Max. flow vs Pressure drop
Flow rating "B" (Zero Current)

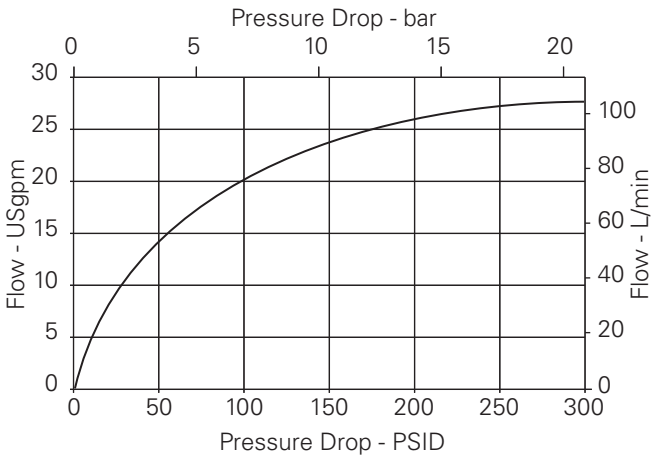

Flow vs Current

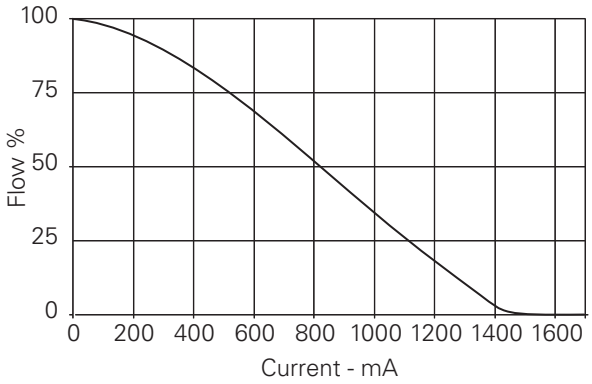

Note: To determine operating characteristics for the flow rating selected, at a specific differential pressure, first determine maximum flow from upper curve at the differential pressure value. This will be the "100%" flow on the lower curve.

Parameters: 400 Hz PWM

EFV1-12-O - Proportional valve

Proportional flow, normally open spool
Up to 104 L/min (27.5 USgpm) • 210 bar (3000 psi)

Model code

EFV1	–	12	–	*	–	0	–	*	–	*	–	*	–	***	–	*****E**	–	00
1		2		3		4		5		6		7		8		9		10

1 Function

EFV1 - Electro proportional flow control valve

2 Size

12 - 12 size

3 Seal material

N - Buna-N
V - Viton®

4 Logic

0 - Normally open

5 Flow rating

A - 25.0 USgpm @ 300 PSID
B - 27.5 USgpm @ 300 PSID

6 Manual override option

0 - No core tube special features
S - Screw-in

7 Valve housing material

Blank - Cartridge only
A - Aluminum
S - Steel

8 Port size

Code	Port size	Housing number	
		Aluminium single	Steel single
0	Cartridge only		
4G	1/2" BSPP	02-161817	02-169815
6G	3/4" BSPP	02-161816	02-169814
10T	SAE 10	02-160642	02-161070
12T	SAE 12	02-160646	02-169816

Note: Both the manifold and port plug are required.
See section J for housing details.

9 Coil series

E - E series coils

*These model digits will not be stamped on the valve.

For coil part numbers and dimensions see section C.

10 Special features

00 - None

Only required when valve has special features, omitted if "00".

Where measurements are critical request certified drawings. We reserve the right to change specifications without notice.

Dimensions
mm (inch)

Torque cartridge in housing
S - 136-149 Nm (100-110 ft lbs)
A - 108-122 Nm (80-90 ft lbs)

Note: Port 1 is unused and must be plugged.

Note: EFV1-12 with DIN-43650 connector shown.

Cartridge only

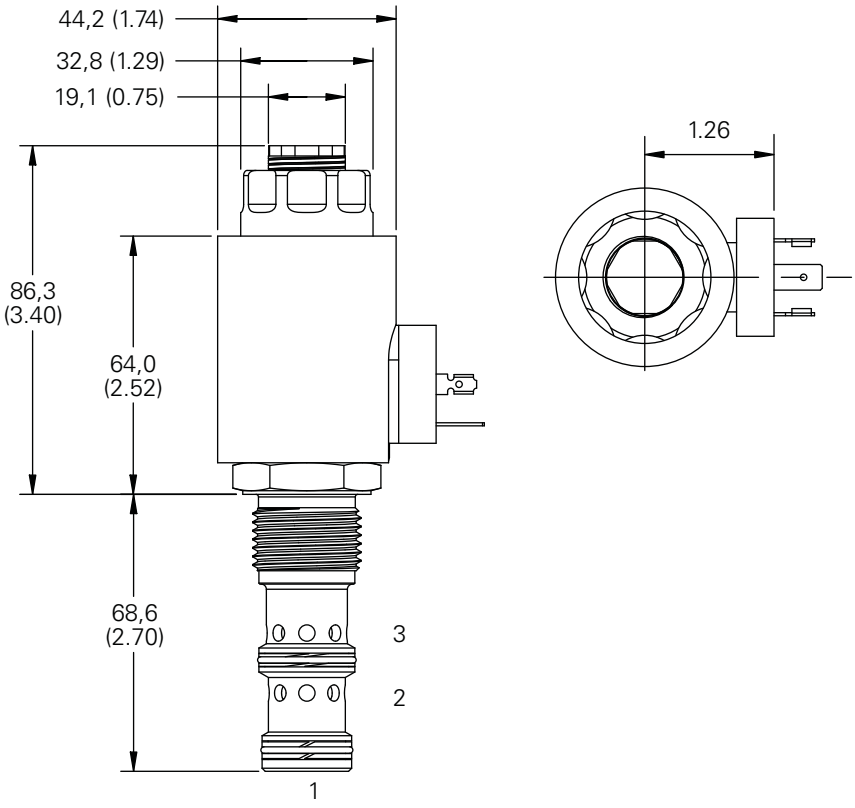

Installation drawing (Aluminum)

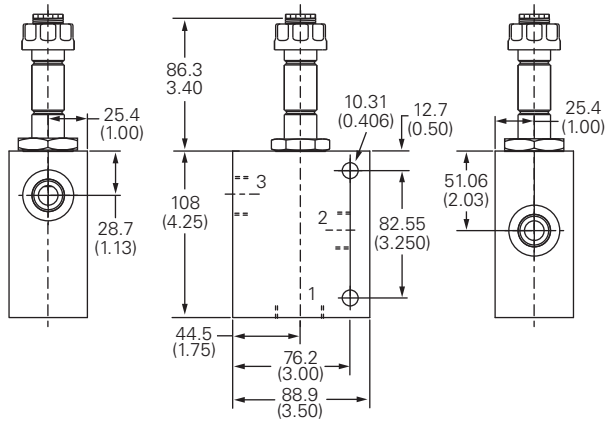

Where measurements are critical request certified drawings. We reserve the right to change specifications without notice.

ESV9-8-E - Proportional solenoid valve

4-way, 3-position, screw-in cartridge, proportional solenoid valve
Up to 11 L/min (2.9 USgpm) • Up to 250 bar (3600 psi)

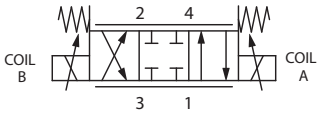

Operation

In the de-energized (center) position, all ports are blocked. When solenoid A is energized, flow is directed from port 3 to port 2 and from port 4 to port 1. Port 1 is not intended to be used as an inlet.

When solenoid B is energized, flow is directed from port 3 to port 4 and from port 2 to port 1. Port 1 is not intended to be used as an inlet.

Features

- Highly engineered components
- Compact design with low pressure drop
- Designed for optimized linearity and hysteresis
- IP69K ToughCoils™ compatible
- Optional manual override
- Industry standard cavity tool

Profile view

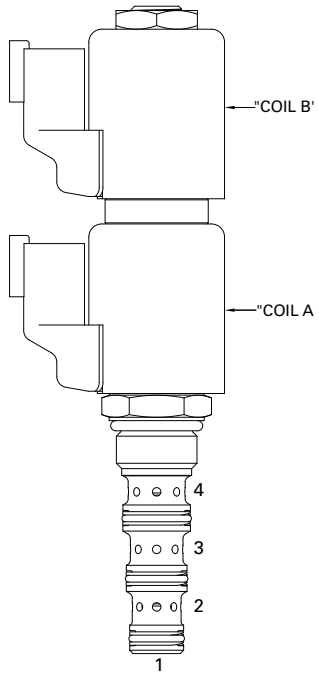

Performance data

Ratings and specifications

Performance data is typical with fluid at 21,8 cST (105 SUS) and 49°C (120°F)	
Typical application pressure Operating Pressure Port 1 (T) Operating Pressure Port 2,3 and 4 (A, P and B)	 210 bar (3,000 psi) 250 bar (3,600 psi)
Cartridge fatigue pressure (infinite life) Port 1 (T) Port 2,3 and 4 (A, P and B)	 210 bar (3,000 psi) 250 bar (3,600 psi)
Rated burst pressure	750 bar (10,600 psi) per NFPA/T2-6-1 R2-2000
Rated flow	11.0 L/min (2.9 USgpm)
Temperature range	-40° to 120°C (-40° to 248°F)
Coil power	23 W*
Maximum hysteresis	7.0%
Step response	70 ms to 90% flow
Cavity	C-8-4
Fluids	All general purpose hydraulic fluids such as: MIL-H-5606, SAE 10, SAE 20 etc.
Filtration	Cleanliness code 18/16/13
Standard housing material	Steel
Weight including coils	0.5 kg (1.1 lbs)
Seal kit	02-160757 (Buna-N), 02-160758 (Viton®)
Internal leakage	165 cm^3/min (10 in^3/min) max. @ 210 bar (3000 psi)

Viton is a registered trademark of E.I. DuPont.
*AC coils must be used with a rectifying connector.

Description

The ESV9 with E spool is a proportional four-way, three-position, direct acting, spool type solenoid valve with all ports closed in the de-energized position. This valve is ideal for moderate flow applications where an actuator needs to be controlled proportionally in both directions and stopped in any position.

Pressure drop

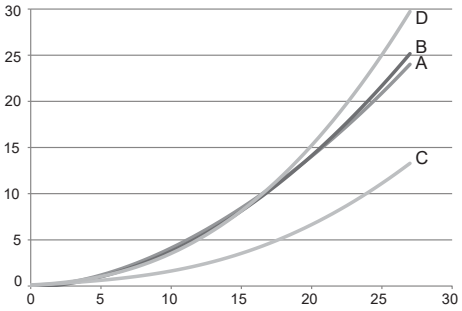

Flow vs. Current at 10 bar ΔP

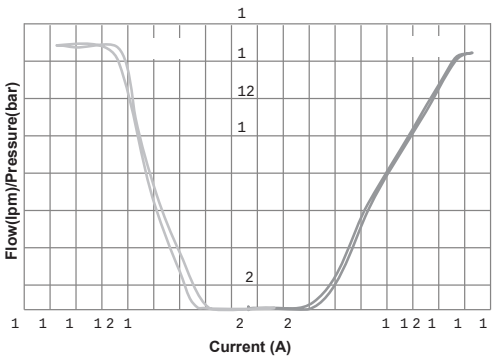

A - Port 3 to port 2
B - Port 3 to port 4
C - Port 4 to port 1
D - Port 2 to port 1

Where measurements are critical request certified drawings. We reserve the right to change specifications without notice.

ESV9-8-F - Proportional solenoid valve

4-way, 3-position, screw-in cartridge, proportional solenoid valve
Up to 11 L/min (2.9 USgpm) • Up to 250 bar (3600 psi)

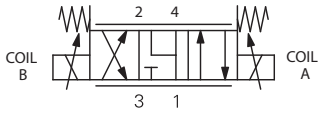

Operation

In the de-energized (center) position, port 1, port 2, and port 4 are open to each other while port 3 is blocked. When solenoid A is energized, flow is directed from port 3 to port 2 and from port 4 to port 1. When solenoid B is energized, flow is directed from port 3 to port 4 and from port 2 to port 1.

Features

- Highly engineered components
- Compact design with low pressure drop
- Designed for optimized linearity and hysteresis
- IP69K ToughCoils™ compatible
- Optional manual override
- Industry standard cavity tool.

B

Profile view

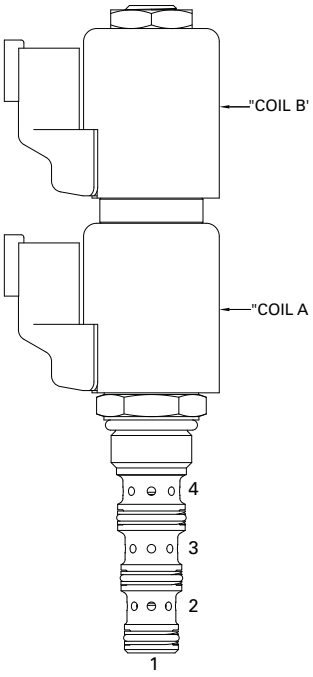

Performance data

Ratings and specifications

Performance data is typical with fluid at 21,8 cST (105 SUS) and 49°C (120°F)	
Typical application pressure Operating Pressure Port 1 (T) Operating Pressure Port 2,3 and 4 (A, P and B)	 210 bar (3,000 psi) 250 bar (3,600 psi)
Cartridge fatigue pressure (infinite life) Port 1 (T) Port 2,3 and 4 (A, P and B)	 210 bar (3,000 psi) 250 bar (3,600 psi)
Rated burst pressure	750 bar (10,600 psi) per NFPA/T2-6-1 R2-2000
Rated flow	11.0 L/min (2.9 USgpm)
Temperature range	-40° to 120°C (-40° to 248°F)
Coil power	23 W**
Maximum hysteresis	7.0%
Step response	70 ms to 90% flow
Cavity	C-8-4
Fluids	All general purpose hydraulic fluids such as: MIL-H-5606, SAE 10, SAE 20 etc.
Filtration	Cleanliness code 18/16/13
Standard housing material	Steel
Weight including coils	1.1 kg (2.3 lbs)
Seal kit	02-160757 (Buna-N), 02-160758 (Viton®)
Internal leakage	250 cm^3/min (15 in^3/min) max. @ 210 bar (3000 psi)

Viton is a registered trademark of E.I. DuPont.

Description

The ESV9 with F spool is a proportional four way, three position, direct acting, spool type solenoid valve. In the de-energized condition Port 2 and 4 are open to tank with the inlet port 3 blocked. This valve is ideal for moderate flow applications where an actuator needs to be moved in both directions and stopped in any position while allowing the service ports to decay to tank pressure in the de-energized condition.

Pressure drop

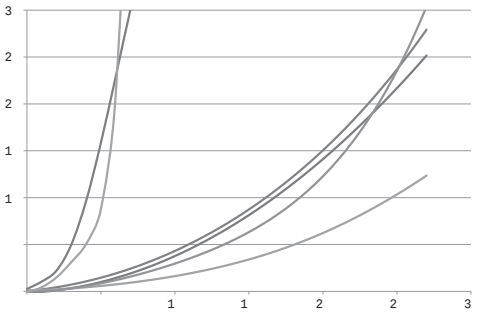

Flow vs. Current at 10 bar ΔP

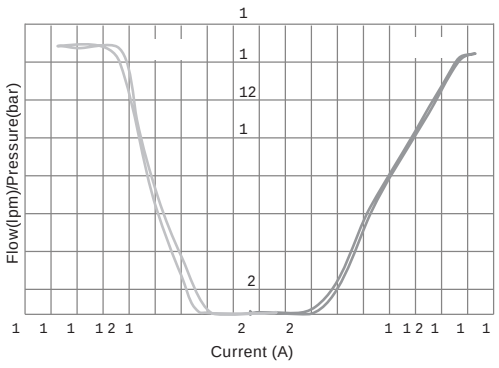

A - Port 3 or port 2 energized
B - Port 3 to port 4 energized
C - Port 2 or port 1 energized
D - Port 2 to port 1 de-energized
E - Port 4 to port 1 energized
F - Port 4 to port 1 de-energized

Where measurements are critical request certified drawings. We reserve the right to change specifications without notice.

ESV9-8 - Proportional solenoid valve

4-way, 3-position, screw-in cartridge, proportional solenoid valve
Up to 11 L/min (2.9 USgpm) • Up to 250 bar (3600 psi)

Model code

ESV9	–	8	*	–	*	–	*	–	***	–	****	*	*	–	**	**	A
1		2	3		4		5		6		7	8	9		10	11	12

1 Function

ESV9 - Proportional solenoid valve

2 Size

8 - 8 size

3 Seal material

Blank - Buna-N
V - Viton®

4 Spool center condition

E

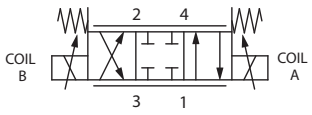

F

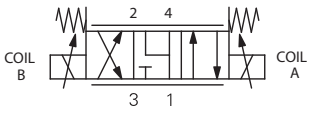

5 Manual override option

0 - No manual override
M - Manual override, push pull type
For valve dimensions with manual override, see pages B873.

6 Housing material and ports

Code	Port size	Housing number	
		Aluminium	Steel
0	Cartridge only		
A2G	1/4" BSPP	02-160747	
A3G	3/8" BSPP	02-160748	
A6H	SAE 6	02-160749	
A8H	SAE 8	02-160750	
S2G	1/4" BSPP		02-160753
S3G	3/8" BSPP		02-160754
S6T	SAE 6		02-160751
S8T	SAE 8		02-160752

See section J for housing details.

7 Coil voltage and type

000 - No coil
012D - 12V DC without diode
024D - 24V DC without diode
012B - 12V DC with diode
024B - 24V DC with diode

8 Connection type

Blank - No coil
N - Deutsch male, DT04-2P, integrated
G - DIN 43650
W - Flying lead
Y - Amp Jr (DC Only) Mating Connector: AMP 963040-3 or equivalent

D0 - MetriPackR 150 Male, Integrated (DC Only) Mating Connector: Delphi 12052641

See Section C for coil details.

9 Coil series

Blank - No coil
P - P Series ToughCoils™ 23 W

10 Coil special feature

00 - None

11 Valve special features[1]

00 - None

(Only required if valve has special features omitted if "00".)

12 Design code

A - Design code 00

[1]These model digits are not stamped on the valve.

⚠ Warning

Aluminum housings can be used for pressures up to 210 bar (3000 psi). Steel housings must be used for operating pressures above 210 bar (3000 psi).

Where measurements are critical request certified drawings. We reserve the right to change specifications without notice.

Dimensions

mm (inch)

Torque cartridge in aluminum housing 34-41 Nm (25.0 - 30.0 ft. lbs.) and 34-41 Nm (25.0 - 30.0 ft. lbs.) in a steel housing

When solenoid valve is ordered without coils, it will be supplied with coil spacer and coil nut.

ESV9-8 without MO

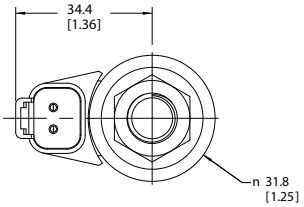

ESV9-8 with MO

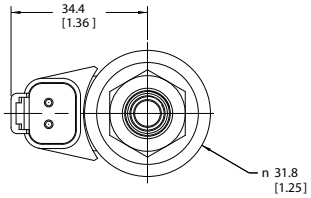

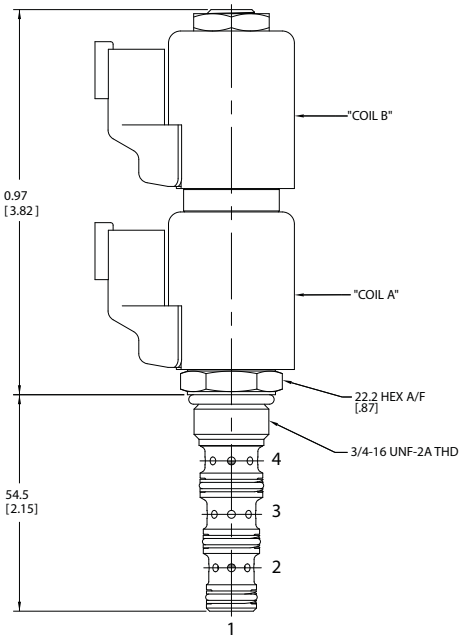

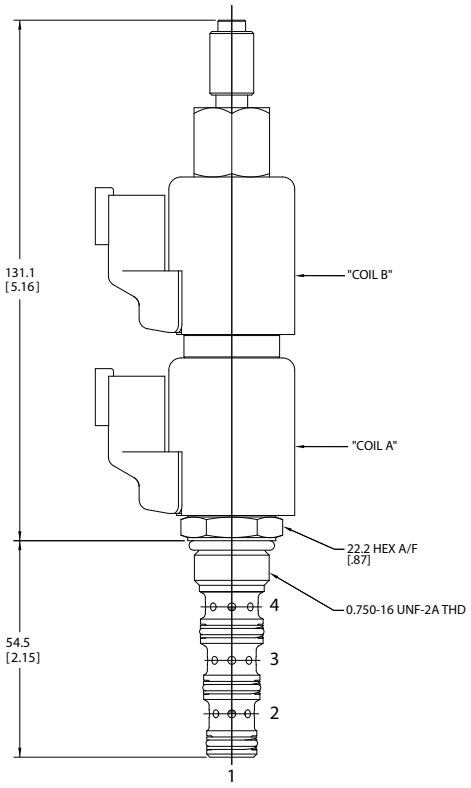

Spare parts

Coil Nut for MO	565559
Coil Nut without MO	565558
Coil Spacer	02-186730

⚠ Warning

Maintain 5-8 Nm (4-6 ft lbs) maximum torque on coil nut. Over tightening may cause valve failure.

Where measurements are critical request certified drawings. We reserve the right to change specifications without notice.

ESV9-10 - Proportional solenoid valve

4-way, 3-position, screw-in cartridge, proportional solenoid valve
Up to 22 L/min (5.8 USgpm) • Up to 250 bar (3600 psi)

Model code

ESV9	–	10	*	–	*	*	–	***	–	****	*	*	–	**	**	A
1		2	3		4	5		6		7	8	9		10	11	12

1 Function

ESV9 - Proportional solenoid valve

2 Size

10 - 10 size

3 Seal material

Blank - Buna-N
V - Viton®

4 Spool center condition

E

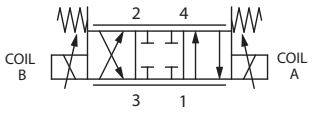

F

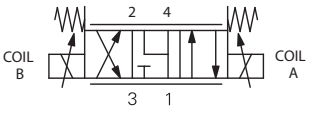

5 Manual override option

0 - No manual override
M - Manual override, push pull type
For valve dimensions with manual override, see pages B873.

6 Housing material and ports

Code	Port size	Housing number	
		Aluminium	Steel
0	Cartridge only		
A2G	1/4" BSPP	02-185804	
A3G	3/8" BSPP	02-185805	
A6H	SAE 6	02-185802	
A8H	SAE 8	02-185803	
S2G	1/4" BSPP		02-175139
S3G	3/8" BSPP		02-175140
S6T	SAE 6		02-175137
S8T	SAE 8		02-175138

See section J for housing details.

7 Coil voltage and type

000 - No coil
012D - 12V DC without diode
024D - 24V DC without diode
012B - 12V DC with diode
024B - 24V DC with diode

8 Connection type

Blank - No coil
N - Deutsch male, DT04-2P, integrated
G - DIN 43650
W - Flying lead
Y - Amp Jr (DC Only) Mating Connector: AMP 963040-3 or equivalent

D0 - MetriPackR 150 Male, Integrated (DC Only) Mating Connector: Delphi 12052641

See Section C for coil details.

9 Coil series

Blank - No coil
L - L Series Large ToughCoils™ 28 W

10 Coil special feature

00 - None

11 Valve special features[1]

00 - None

(Only required if valve has special features omitted if "00".)

12 Design code

A - Design code 00

[1]These model digits are not stamped on the valve.

⚠ Warning

Aluminum housings can be used for pressures up to 210 bar (3000 psi). Steel housings must be used for operating pressures above 210 bar (3000 psi).

Where measurements are critical request certified drawings. We reserve the right to change specifications without notice.

ESVL9-10-E - Proportional solenoid valve

5 Port, 3-position, screw-in cartridge, proportional solenoid valve
Up to 23 L/min (USgpm) • Up to 250 bar (3600 psi)

With Load Sense check valve

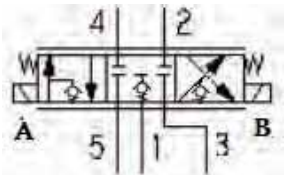

Without Load Sense check valve

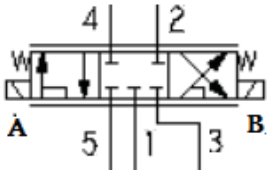

Profile view

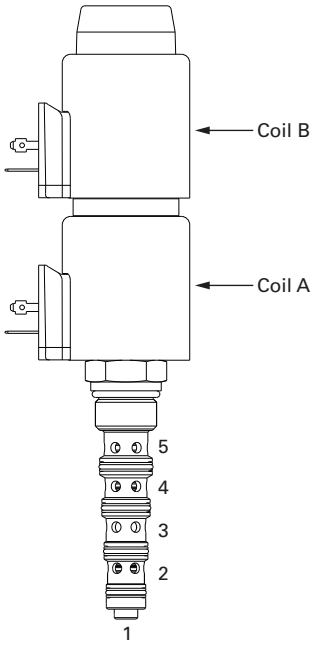

Operation

In the de-energized (center) position, all ports are blocked. When solenoid A is energized, flow is directed from port 5 to port 4 and from port 2 to port 3. Port 1 is connected to system load sense line.

When solenoid B is energized, flow is directed from port 5 to port 2 and from port 4 to port 3. Port 1 is connected to system load sense line.

Features

- Integrated LS check feature in std. cavity
- Highly engineered components
- Compact design with low pressure drop
- Designed for optimized linearity and hysteresis
- IP69K ToughCoils™ compatible
- Optional manual override
- Industry standard cavity tool

Performance data

Ratings and specifications

Performance data is typical with fluid at 21,8 cST (105 SUS) and 49°C (120°F)	
Typical application pressure for all ports	250 bar (3,600 psi)
Cartridge fatigue pressure (infinite life) for all ports	250 bar (3,600 psi)
Rated burst pressure	750 bar (10,600 psi) per NFPA/T2-6-1 R2-2000
Max. flow	23 L/min (2.9 USgpm)
Temperature range	-40° to 120°C (-40° to 248°F)
Coil power	28 W*
Recommended PWM and Dither frequency	100 Hz
Cavity	C-10-5S
Fluids	All general purpose hydraulic fluids such as: MIL-H-5606, SAE 10, SAE 20 etc.
Filtration	Cleanliness code 18/16/13
Standard housing material	Steel
Weight including coils with check valve	1.25 KG
Seal kit	Need to check
Internal leakage	250 cm^3/min (10 in^3/min) max. @ 210 bar (3000 psi)

Viton is a registered trademark of E.I. DuPont.
*AC coils must be used with a rectifying connector.

Description

The ESVL9 with E spool is a proportional 5 ported, three-position, direct acting, spool type solenoid valve with all ports closed in the de-energized position. This valve is ideal for moderate flow applications where an actuator needs to be controlled proportionally in both directions and stopped in any position.

Pressure drop

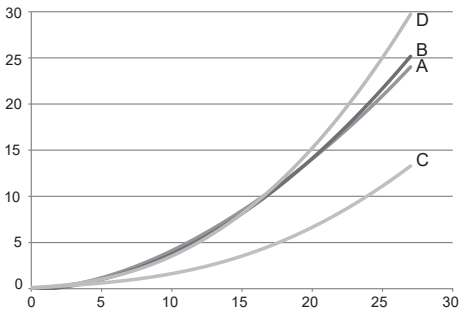

Flow vs. Current at 10 bar ΔP

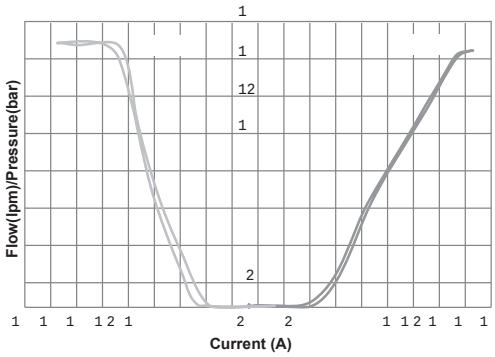

A - Port 5 to port 4
B - Port 5 to port 2
C - Port 2 to port 3
D - Port 4 to port 3

Where measurements are critical request certified drawings. We reserve the right to change specifications without notice.

ESVL9-10-F - Proportional solenoid valve

5 Port, 3-position, screw-in cartridge, proportional solenoid valve
Up to 23 L/min (USgpm) • Up to 250 bar (3600 psi)

With Load Sense check valve

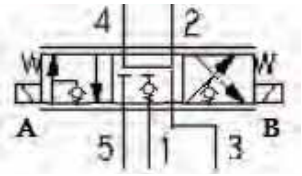

Without Load Sense check valve

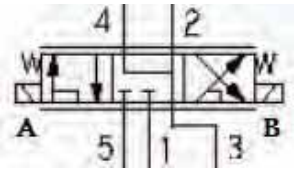

Operation

In the de-energized (center) position, port 3, port 2, and port 4 are open to each other while port 5 is blocked. When solenoid A is energized, flow is directed from port 5 to port 4 and from port 2 to port 3. When solenoid B is energized, flow is directed from port 5 to port 2 and from port 4 to port 3.

Port 1 is connected to system load sense line

Features

- Integrated LS check feature in std. cavity
- Highly engineered components
- Compact design with low pressure drop
- Designed for optimized linearity and hysteresis
- IP69K ToughCoils™ compatible
- Optional manual override
- Industry standard cavity tool.

Profile view

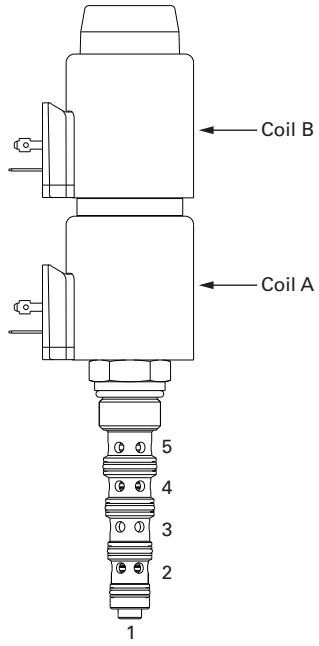

Performance data

Ratings and specifications

Performance data is typical with fluid at 21,8 cST (105 SUS) and 49°C (120°F)	
Typical application pressure for all ports	250 bar (3,600 psi)
Cartridge fatigue pressure (infinite life) for all ports	250 bar (3,600 psi)
Rated burst pressure	750 bar (10,600 psi) per NFPA/T2-6-1 R2-2000
Max. flow	23 L/min (2.9 USgpm)
Temperature range	-40° to 120°C (-40° to 248°F)
Coil power	28 W*
Recommended PWM and Dither frequency	100 Hz
Cavity	C-10-5S
Fluids	All general purpose hydraulic fluids such as: MIL-H-5606, SAE 10, SAE 20 etc.
Filtration	Cleanliness code 18/16/13
Standard housing material	Steel
Weight including coils with check valve	1.25 KG
Seal kit	Need to check
Internal leakage	250 cm^3/min (10 in^3/min) max. @ 210 bar (3000 psi)

Viton is a registered trademark of E.I. DuPont.
*AC coils must be used with a rectifying connector.

Description

The ESV9 with F spool is a proportional 5 ported, three position, direct acting, spool type solenoid valve. In the de-energized condition Port 2 and 4 are open to tank with the inlet port 5 blocked. This valve is ideal for moderate flow applications where an actuator needs to be moved in both directions and stopped in any position while allowing the service ports to decay to tank pressure in the de-energized condition.

Pressure drop

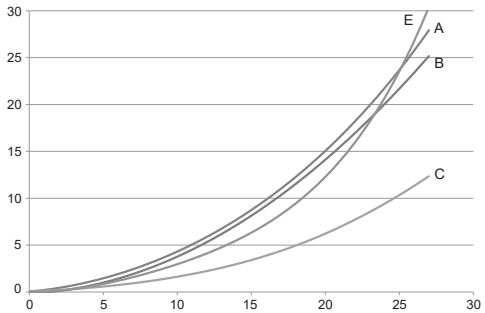

A - Port 5 to port 4
B - Port 5 to port 2
C - Port 2 to port 3
D - Port 4 to port 3

Flow vs. Current at 10 bar ΔP

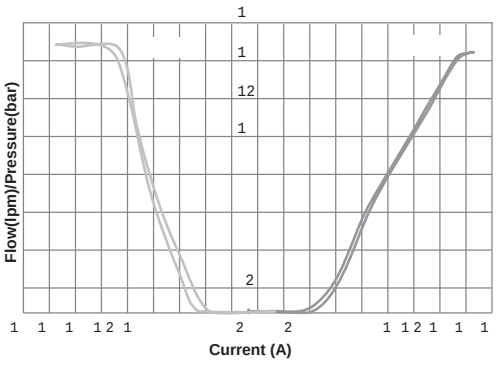

Where measurements are critical request certified drawings. We reserve the right to change specifications without notice.

ESVL9-10 - Proportional solenoid valve

5 Port, 3-position, screw-in cartridge, proportional solenoid valve
Up to 23 L/min (USgpm) • Up to 250 bar (3600 psi)

Model code

ESVL9 – 10 * – * * – * – **** * * – ** * A**

1 2 3 4 5 6 7 8 9 10 11 12

1 Function

ESVL9 - Proportional solenoid valve

2 Size

10 - 10 size

3 Seal material

Blank - Buna-N
V - Viton®

4 Spool center condition

E

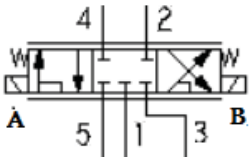

F

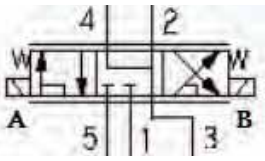

5 Manual override option

0 - No manual override
M - Manual override, push pull type
For valve dimensions with manual override, see pages B873.

6 Housing material and ports

Code	Port size	Housing number	
		Aluminium	Steel
0	Cartridge only		
S3G	3/8" BSPP		6042921-001

See section J for housing details.

7 Coil voltage and type

000 - No coil
012D - 12V DC without diode
024D - 24V DC without diode
012B - 12V DC with diode
024B - 24V DC with diode

8 Connection type

Blank - No coil
G - DIN 43650-A Integrated
N - Deutsch male, DT04-2P, Integrated
D - Metric - Pack 150 male, Integrated
F - Weather - Pack (packard) male, on wire leads
W - Lead wire
Y - AMP Junior, Integrated

See Section C for coil details.

9 Coil series

Blank - No coil
L - L Series Large ToughCoils™ 28 W

10 Coil special feature

00 - None

11 Valve special features[1]

0 - None
C - With valve check

E

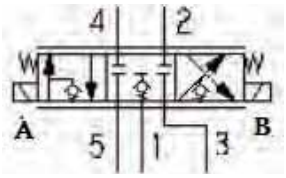

F

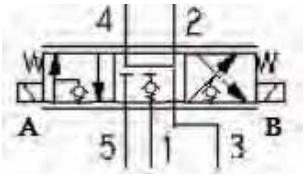

(Only required if valve has special features omitted if "00".)

12 Design code

A - Design code 00

[1]These model digits are not stamped on the valve.

⚠ Warning

Aluminum housings can be used for pressures up to 210 bar (3000 psi). Steel housings must be used for operating pressures above 210 bar (3000 psi).

Where measurements are critical request certified drawings. We reserve the right to change specifications without notice.

ESVL9-10 - Proportional solenoid valve

5 Port, 3-position, screw-in cartridge, proportional solenoid valve
Up to 23 L/min (USgpm) • Up to 250 bar (3600 psi)

Dimensions

mm (inch)

Torque cartridge in aluminum housing 25-30 Nm (25.0 - 30.0 ft. lbs.) and 34-41 Nm (25.0 - 30.0 ft. lbs.) in a steel housing

When solenoid valve is ordered without coils, it will be supplied with coil spacer and coil nut.

ESVL9-10 without MO

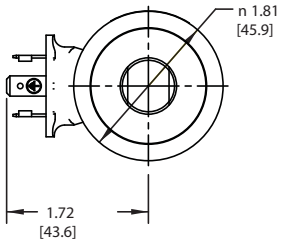

ESVL9-10 with MO

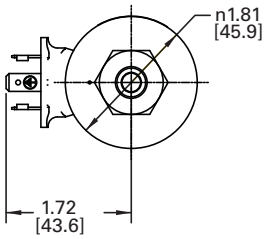

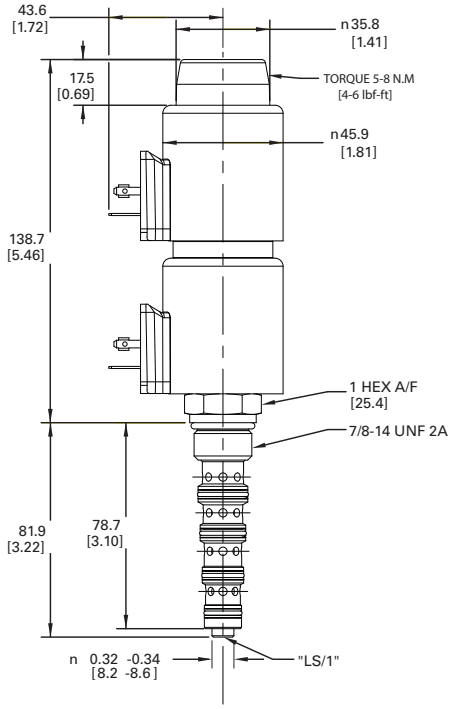

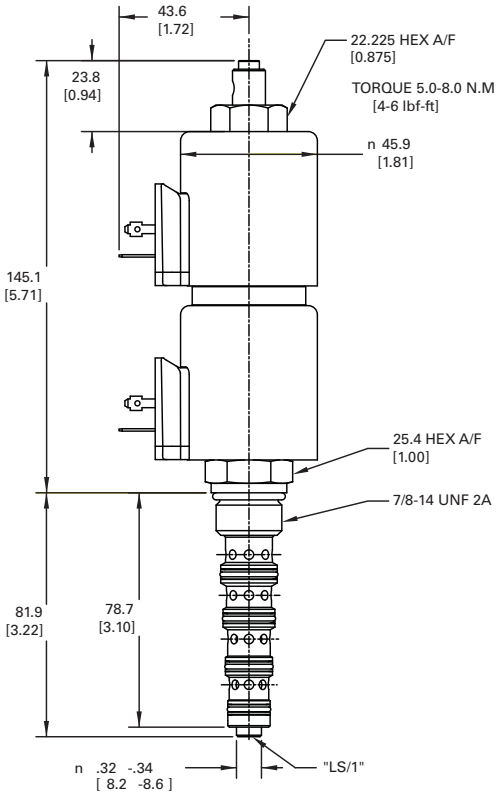

Spare parts

Coil Nut for MO	6038813-001
Coil Nut without MO	02-148332
Coil Spacer	6038409-001

⚠ Warning

Maintain 5-8 Nm (4-6 ft lbs) maximum torque on valve tube nut. Over tightening may cause valve failure.

Where measurements are critical request certified drawings. We reserve the right to change specifications without notice.

PFR24A - Proportional valve

Proportional bi-directional, normally closed poppet
18 L/min at 75% • 210 bar (3000 psi)

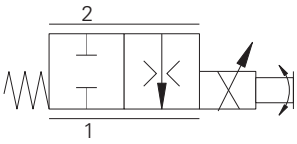

Operation

In the de-energized condition the valve is closed. As current is applied to the coil the valve opens proportionally allowing flow from port 2 to port 1.

Features

- High flow capacity with reduced space requirements.
- Standard valve bodies and common cavities.
- One-piece encapsulated coil with minimal amperage draw.
- Oil immersed armature solenoid.
- Various coil terminals and voltages.
- Coil interchangeability with valves of same series.
- Manual override, seal variations and other options available.
- Sealed coil arrangement to protect stem from corrosion.
- Reversible coil without affecting performance.

Sectional view

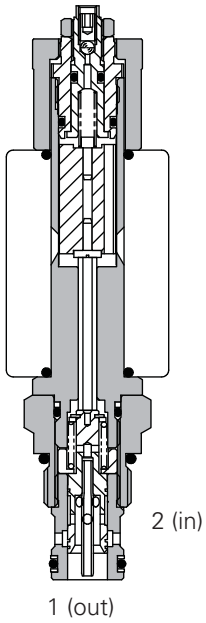

Description

This is a compact 2 ported proportional, pressure compensated, spool type flow regulator. Ideal for speed regulation of actuators in many applications.

Performance data

Ratings and specifications

Performance data is typical with fluid at 32 cST (150 SUS)	
Max inlet pressure	210 bar (3000 psi)
Rated flow	28 L/min @ 100%, 23 L/min @ 85%, 18 L/min@ 75%
Hystersis	8% maximum without PWM, 4% maximum with PWM
Frequency	200 Hz to 400 Hz - 200 recommended
Dead band	25-35% of rated current
Response time	300 ms
Internal leakage	Up to 200 ml/min, 210 bar differential
Temperature range	-30° to 120°C (-22° to 248°F)
Cavity	A6701 (see section M)
Electrical data	See coil data sheet
Torque cartridge into cavity	30 Nm (22 lbs ft)
Mounting position	Unrestricted
Fluids	All general purpose hydraulics fluids such as: MIL-H-5606, SAE 10, SAE 20, etc
Seal Material	Standard nitrile with PTFE back up rings
Filtration	BS5540/4 Class 16/13 (25 micron or better)
Nominal viscosity range	15 to 250 cSt
Standard housing materials	Aluminium alloy
Coil Weight	0.3 kg (.6 lbs)
Weight	0.2 kg (.44 lbs)
Seal kit	SK1138 (Nitrile) SK1138V (Viton®)

Viton is a registered trademark of E.I. DuPont

Pressure drop curves

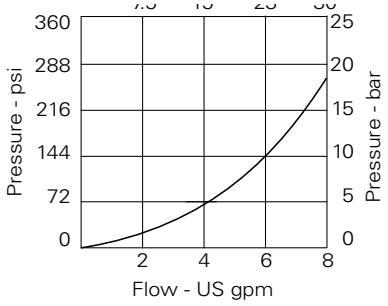

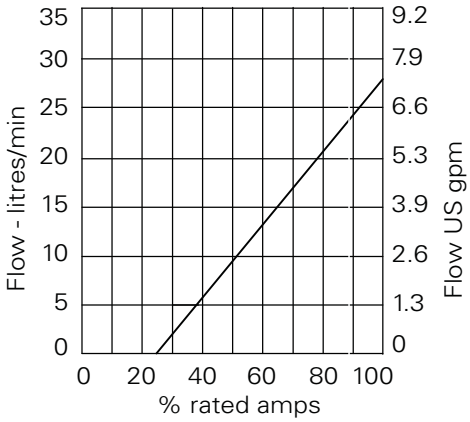

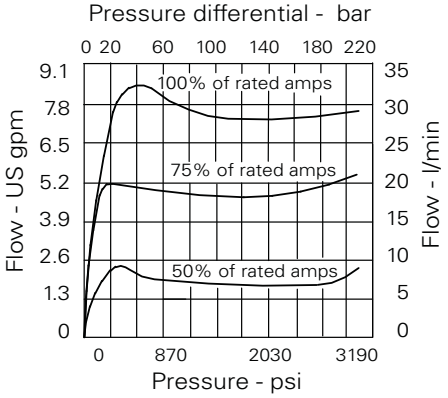

Where measurements are critical request certified drawings. We reserve the right to change specifications without notice.

PFR24A - Proportional Valve

Proportional bi-directional, normally closed poppet
18 L/min at 75% • 210 bar (3000 psi)

Model code

PFR2 4A – N – 6 – H – 24 – 3W

1 2 3 4 5 6

1 Function
PFR2 4A - Cartridge only

2 Seal material
N - Nitrile
V - Viton®

3 Manual override
6 - Screw

4 Coil termination
H - DIN43650
F - Flying Lead
DM - Deutsch moulded
Other terminations available on request.

5 Voltage
12 - 12 VDC
24 - 24 VDC

6 Port size

Code	Port size	Housing number
		Aluminium
0		Cartridge only
2W	1/4" BSP	A12592
3W	3/8" BSP	A7450
6T	3/8" SAE	A19355

See section J for housing details.

Dimensions

mm (inch)

Cartridge only

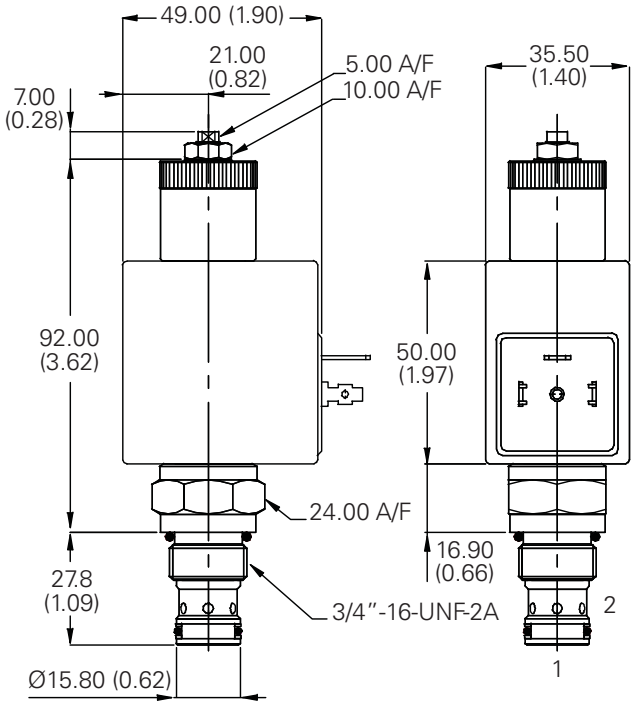

Installation drawing

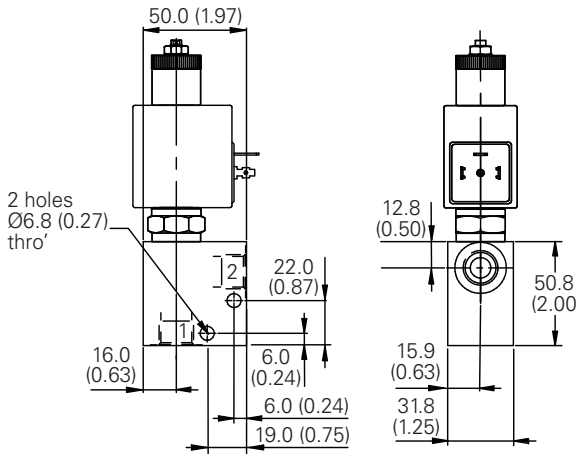

Where measurements are critical request certified drawings. We reserve the right to change specifications without notice.

EFV2-12-C - Proportional valve

Proportional flow, normally closed spool
Up to 114 L/min (30 USgpm) • 210 bar (3000 psi)

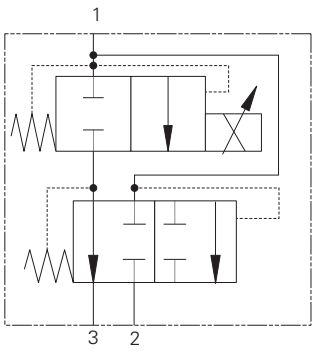

Operation

Current supplied to the coil controls the valve. At zero current, the valve is fully closed from port 1 to port 3. At 1500 to 1600 mA (12V coil) the valve is fully open.

The valve will regulate flow out of port 3 regardless of downstream system pressure. As current is increased to the solenoid the flow out of port 3 will increase.

Features

Hardened and ground working parts to give long life with good control; Compact design with low pressure drop.IP69K Tough coil compatibility, continuously rated.

Sectional view

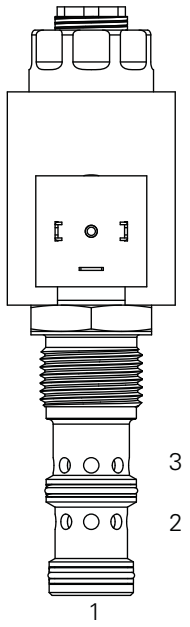

Description

This is a three port pressure compensated proportional normally closed flow control screw in cartridge valve. The valve can be used as a priority or a restrictive style valve allowing the valve to control the outlet flow with the option of the excess flow being used for another system.

Performance data

Ratings and specifications

Performance data is typical with fluid at 21,8 cST (105 SUS) and 49°C (120°F)	
Typical application pressure	210 bar (3000 psi)
Cartridge endurance rating	1million cycles
Cartridge fatigue pressure (infinite life)	210 bar (3000 psi) NFPA rated
Rated flow	"A" Spool-max regulated flow (by-pass mode): 57 L/min (15 USgpm) max regulated flow (2 port mode): 53 L/min (14 USgpm) max input flow (input flow): 114 L/min (30 USgpm) "B" Spool-max regulated flow (by-pass mode): 38 L/min (10 USgpm) max regulated flow (2 port mode): 31 L/min (8 USgpm) max input flow (input flow): 114 L/min (30 USgpm) **Note:** Max regulated flow may decrease slightly during compensation.
Internal leakage (fully closed)	240 cm^3/min (15 in^3/min) @ 3000 PSID
Nominal supply voltage	12/24 V
Current to fully open valve	1600 6 200 mA (12V coil), 800 6 100 mA (24V coil)
Current to fully close valve	350 6 100 mA (12V coil), 175 6 50 mA (24V coil)
Recommended PWM frequency	200-400 Hz
Coil resistance	4.7v V/12V, 19.0 V/24V
Mass	Cartridge only 0,37 kg (0.82 lb), cartridge with coil and end nut 0,73 kg (1.62 lb)
Temperature range	-30° to 90°C (-22° to 194°F)
Maximum oil temperature	120°C (248°F)
Maximum internal coil temperature	200°C (392°F)
Cavity	C-12-3
Fluids	All general purpose hydraulics fluids such as: MIL-H-5606, SAE 10, SAE 20, DTE 24, etc.
Filtration	Cleanliness code 18/16/13
Housing material (standard)	Aluminum or steel
Hysterisis	1.5 USgpm with 400Hz PWM driver
Seal kit	9900171-000 (Buna-N), 9900172-000 (Viton®)

Viton is a registered trademark of E.I. DuPont

Where measurements are critical request certified drawings. We reserve the right to change specifications without notice.

EFV2-12-C - Proportional valve

Up to 114 L/min (30 USgpm) • 210 bar (3000 psi)
Performance Curves

Flow is Pressure drop

Flow vs Pressure drop
Excess flow P1 to P2 (P3 to Atm)
Full current (1700 mA on a 12V Coil)

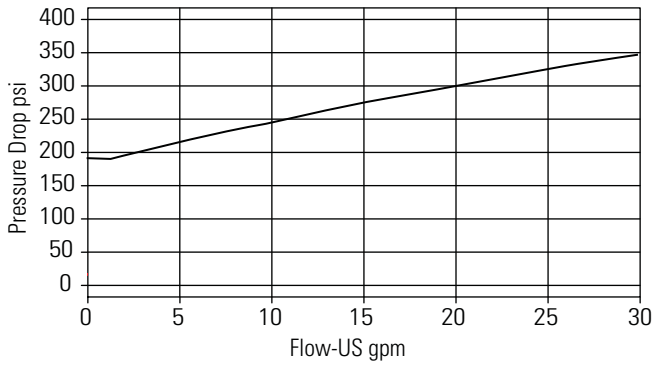

Flow vs Pressure drop
Regulated flow P1 to P3 (P2 to Atm)
Full current (1700 mA on a 12V Coil)

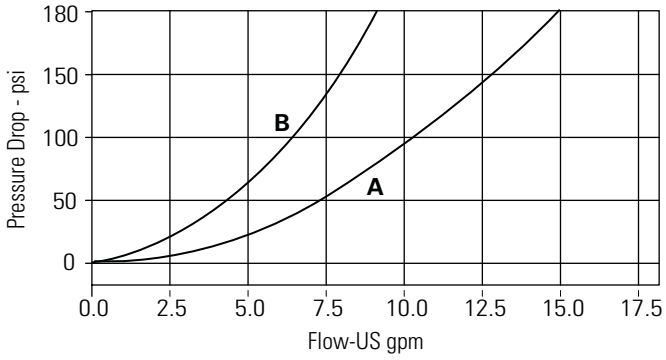

A - A spool pressure drop
B - B spool pressure drop

Flow vs Current

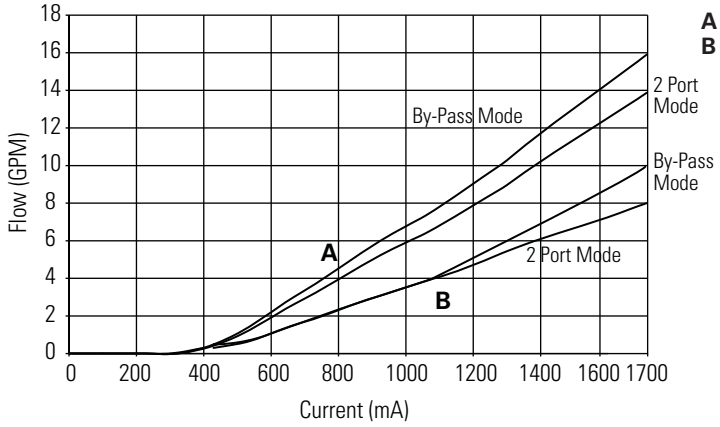

A - A spool
B - B spool

Regulated flow vs Pressure
Regular to Bypass

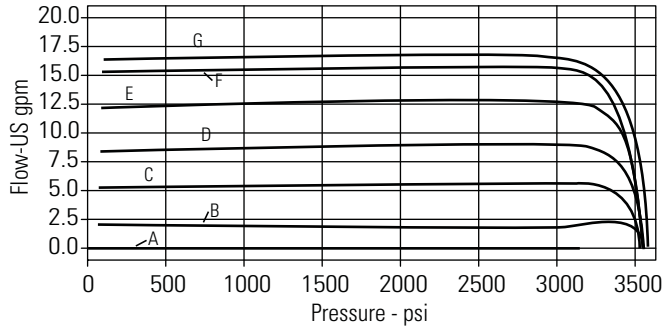

A - 0.3 AMPS
B - 0.6 AMPS
C - 0.9 AMPS
D - 1.2 AMPS
E - 1.5 AMPS
F - 1.8 AMPS
G - 2.0 AMPS

Regulated flow vs Pressure
Bypass to Regular

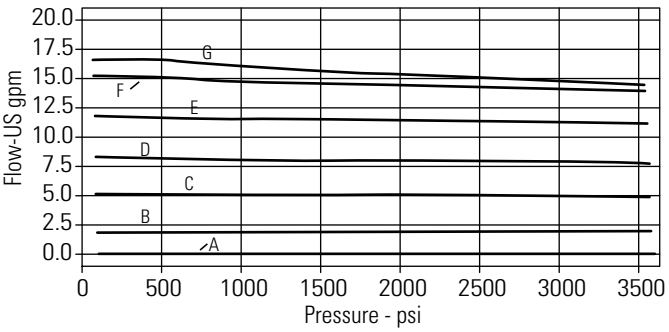

A - 0.3 AMPS
B - 0.6 AMPS
C - 0.9 AMPS
D - 1.2 AMPS
E - 1.5 AMPS
F - 1.8 AMPS
G - 2.0 AMPS

Note: Pressure Compensation curves are shown for "B" spool valves.

Where measurements are critical request certified drawings. We reserve the right to change specifications without notice.

EFV2-12-C - Proportional valve

Proportional flow, normally closed spool
Up to 114 L/min (30 USgpm) • 210 bar (3000 psi)

Model code

EFV2 – 12 – * – C – * – * – * – * – *****E** – 00**

1 2 3 4 5 6 7 8 9 10

1 Function

EFV2 - Electro proportional flow control valve

2 Size

12 - 12 size

3 Seal material

N - Buna-N
V - Viton®

4 Logic

C - Normally closed

5 Flow rating

A - 15 USgpm @ 180 PSID
B - 10 USgpm @ 180 PSID

See specifications

6 Manual override option

0 - No core tube special features
S - Screw-in

7 Valve housing material

0 - Cartridge only
A - Aluminum
S - Steel

8 Port Size

Code	Port size	Housing number	
		Aluminium single	Steel single
0	Cartridge only		
04G	1/2" BSPP	02-161817	02-169815
06G	3/4" BSPP	02-161816	02-169814
10T	SAE 10	02-160642	02-161070
12T	SAE 12	02-160646	02-169816

Note: Both the manifold and port plug are required.
See section J for housing details.

9 Coil series

E - E series coils

*These model digits will not be stamped on the valve. For coil part numbers and dimensions see section C.

10 Special features

00 - None

Only required when valve has special features, omitted if "00".

B

Where measurements are critical request certified drawings. We reserve the right to change specifications without notice.

EFV2-12-C - Proportional Valve

Proportional flow, normally closed spool
Up to 114 L/min (30 USgpm) • 210 bar (3000 psi)

Dimensions
mm (inch)

Torque cartridge in housing
S - 136-149 Nm (100-149 ft lbs)
A - 108-122 Nm (80-90 ft lbs)

Note: EFV2-12 with DIN-43650 connector shown.

Cartridge only

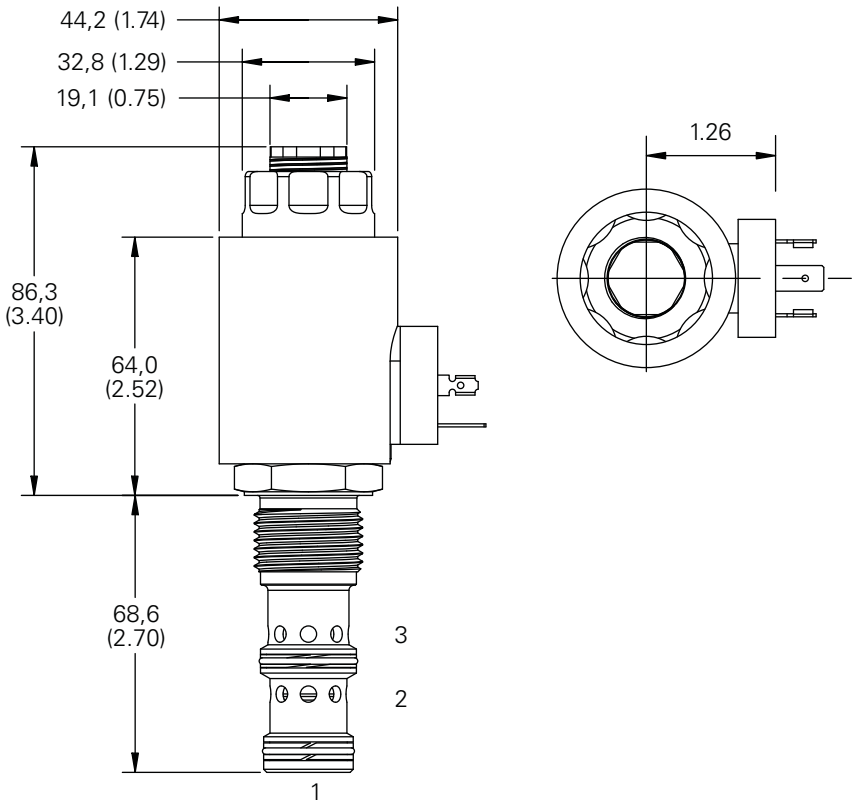

Installation drawing (Aluminum)

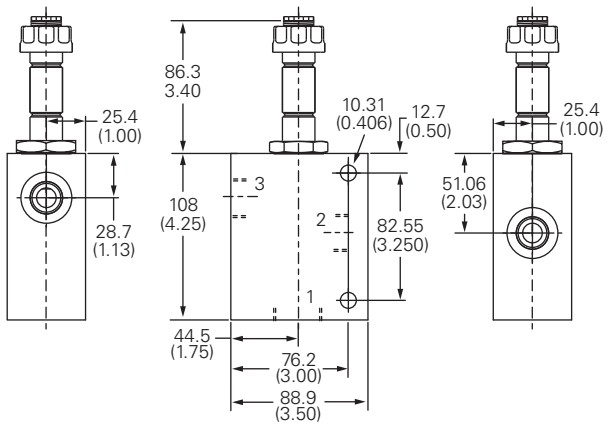

Where measurements are critical request certified drawings. We reserve the right to change specifications without notice.

EFV2-12-O - Proportional valve

Proportional flow, normally open spool
Up to 114 L/min (30 USgpm) • 210 bar (3000 psi)

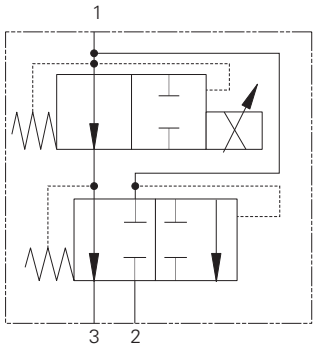

Profile view

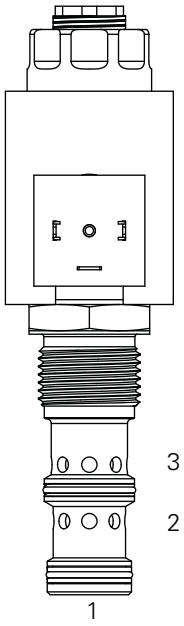

Description

This is a three port pressure compensated normally open proportional flow control screw in cartridge valve. The valve can be used as a priority or a restrictive style valve allowing the valve to control the outlet flow with the option of the excess flow being used for another system.

Operation

Current supplied to the coil controls the valve. At zero current, the valve is fully open from port 1 to port 3. At 1600 mA (12V coil) the valve is fully closed.

The valve will regulate flow out of port 3 regardless of downstream system pressure. As current is increased to the solenoid the flow out of port 3 will decrease.

Features

Hardened and ground working parts to give long life with good control; Compact design with low pressure drop.IP69K Tough coil compatibility, continuously rated.

Performance data

Ratings and specifications

Performance data is typical with fluid at 21,8 cST (105 SUS) and 49°C (120°F)	
Typical application pressure	210 bar (3000 psi)
Cartridge endurance rating	1million cycles
Cartridge fatigue pressure (infinite life)	210 bar (3000 psi) NFPA rated
Rated flow	"A" Spool-max regulated flow (by-pass mode): 53 L/min (14 USgpm) max regulated flow (2 port mode): 42 L/min (11 USgpm) max input flow (input flow): 114 L/min (30 USgpm) "B" Spool-max regulated flow (by-pass mode): 38 L/min (10 USgpm) max regulated flow (2 port mode): 31 L/min (8 USgpm) max input flow (input flow): 114 L/min (30 USgpm) **Note:** Max regulated flow may decrease slightly during compensation.
Internal leakage (fully closed)	77-483 cm^3/min (5-30 in^3/min) @ 3000 PSID
Nominal supply voltage	12/24 V
Current to fully open valve	350 6 100 mA (12V coil), 800 6 100 mA (24V coil)
Current to fully close valve	1600 6 200 mA (12V coil), 800 6 100 mA (24V coil)
Recommended PWM frequency	200-400 Hz
Coil resistance	4.7v V/12V, 19.0 V/24V
Mass	Cartridge only 0,37 kg (0.82 lb), cartridge with coil and end nut 0,73 kg (1.62 lb)
Temperature range	-30° to 90°C (-22° to 194°F)
Maximum oil temperature	120°C (248°F)
Maximum internal coil temperature	200°C (392°F)
Cavity	C-12-3
Fluids	All general purpose hydraulics fluids such as: MIL-H-5606, SAE 10, SAE 20, DTE 24, etc.
Filtration	Cleanliness code 18/16/13
Housing material (standard)	Aluminum or steel
Hysterisis	1.5 USgpm with 400Hz PWM driver
Seal kit	9900171-000 (Buna-N), 9900172-000 (Viton®)

Viton is a registered trademark of E.I. DuPont.

Where measurements are critical request certified drawings. We reserve the right to change specifications without notice.

EFV2-12-O - Proportional valve

Up to 114 L/min (30 USgpm) • 210 bar (3000 psi)
Performance Curves

Pressure drop port 1 to port 2

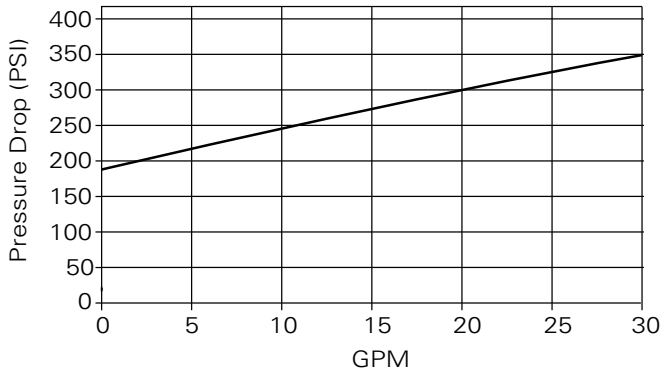

Pressure drop port 1 to port 3

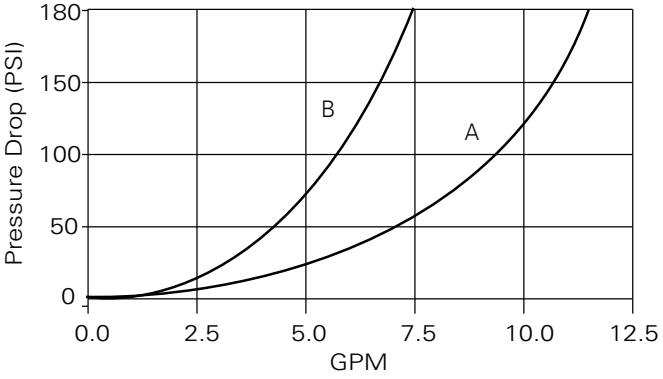

Flow vs Current - A Spool

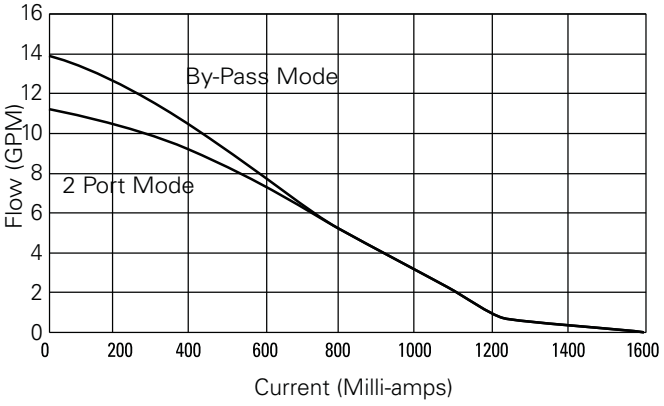

Flow vs Current - B Spool

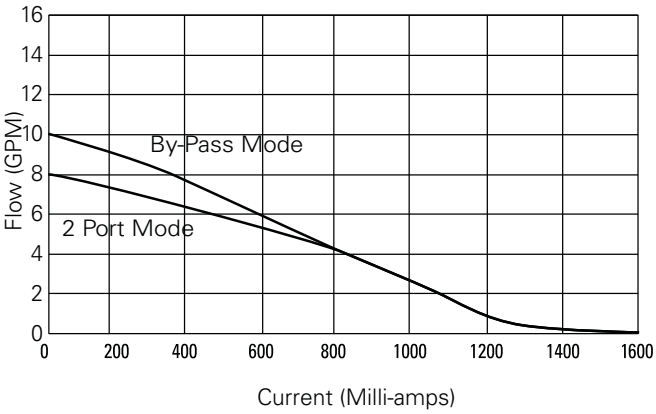

Parameters: 400 Hz PWM

Regulated flow vs Pressure

Port 3 Pressure > Port 2 Pressure

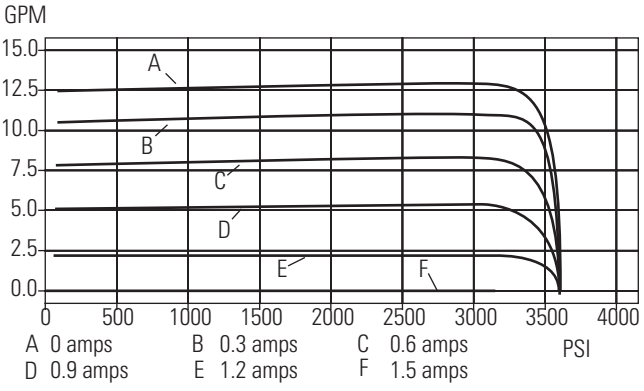

Regulated flow vs Pressure

Port 2 Pressure > Port 3 Pressure

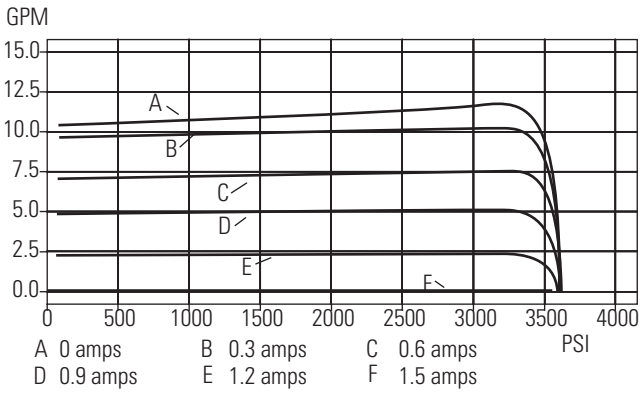

Note: Pressure Compensation curves are shown for "B" spool valves.

Where measurements are critical request certified drawings. We reserve the right to change specifications without notice.

EFV2-12-O - Proportional valve

Proportional flow, normally open spool
Up to 114 L/min (30 USgpm) • 210 bar (3000 psi)

Model code

EFV2	–	12	–	*	–	0	–	*	–	*	–	*	–	***	–	*****E**	–	00
1		2		3		4		5		6		7		8		9		10

1 Function

EFV2 - Electro proportional flow control valve

2 Size

12 - 12 size

3 Seal material

N - Buna-N
V - Viton®

4 Logic

0 - Normally open

5 Flow rating

A - 14 USgpm @ 180 PSID
B - 10 USgpm @ 180 PSID

See specifications

6 Manual override option

0 - No core tube special features
S - Screw-in

7 Valve housing material

0 - Cartridge only
A - Aluminum
S - Steel

8 Port size

Code	Port size	Housing number	
		Aluminium single	Steel single
0	Cartridge only		
4G	1/2" BSPP	02-161817	02-169815
6G	3/4" BSPP	02-161816	02-169814
10T	SAE 10	02-160642	02-161070
12T	SAE 12	02-160646	02-169816

Note: Both the manifold and port plug are required.
See section J for housing details.

9 Coil series

E - E series coils

*These model digits will not be stamped on the valve.
For coil part numbers and dimensions see section C.

10 Special features

00 - None

Only required when valve has special features, omitted if "00".

Where measurements are critical request certified drawings. We reserve the right to change specifications without notice.

EFV2-12-O - Proportional valve

Proportional flow, normally open spool
Up to 114 L/min (30 USgpm) • 210 bar (3000 psi)

Dimensions
mm (inch)

Torque cartridge in housing
S - 136-149 Nm (100-149 ft lbs)
A - 108-122 Nm (80-90 ft lbs)

Note: EFV2-12 with DIN-43650 connector shown.

B

Cartridge only

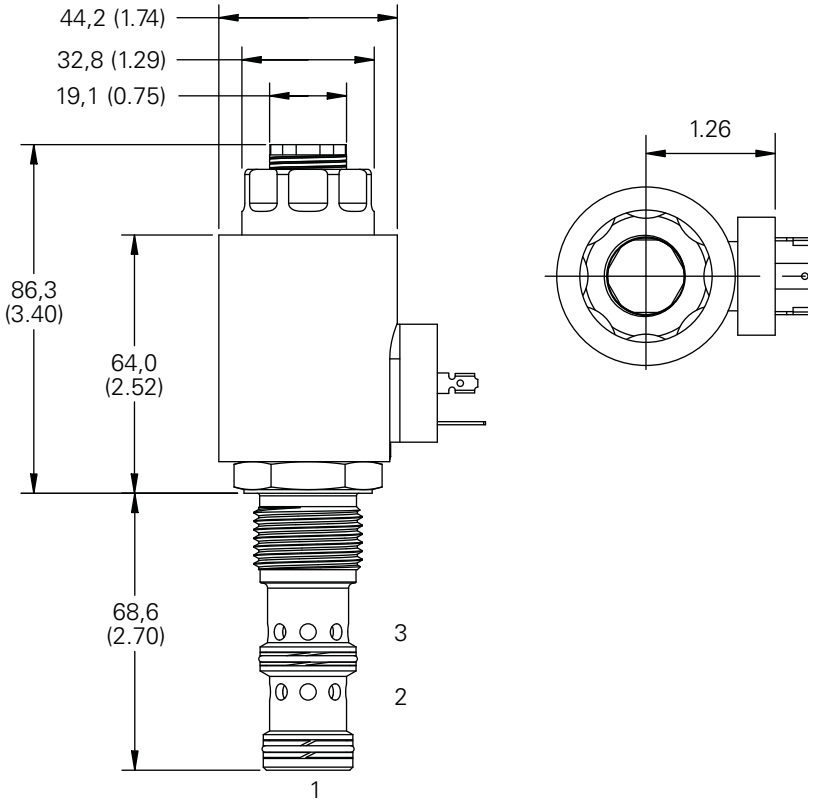

Installation drawing (Aluminum)

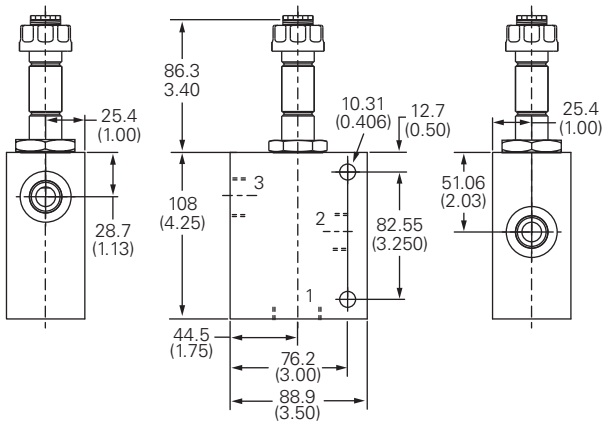

Where measurements are critical request certified drawings. We reserve the right to change specifications without notice.

PDR21A - Proportional valve

Proportional relief
1.5 L/min (.3 USgpm) • 350 bar (5000 psi)

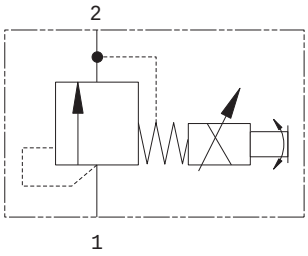

Operation

The poppet is held on the seat by a light spring. The force is increased by the application of magnetic force due to the increase in current. This increases the pressure required to lift the poppet of the seat thus controlling the pressure.

Features

- High flow capacity with reduced space requirements.
- No dynamic seals.
- Standard valve bodies and common cavities.
- One-piece encapsulated coil with minimal amperage draw.
- Oil immersed armature solenoid.
- Various coil terminals and voltages.
- Coil interchangeability with valves of same series.
- Manual override, seal variations and other options available.
- Sealed coil arrangement to protect stem from corrosion

Sectional view

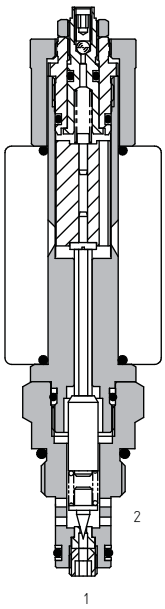

Description

This is a proportional poppet style pilot relief cartridge. The pressure setting is directly proportional to changes in DC current input. The valve is ideal for the control of larger valves for the control of a pressure within a system.

Performance data

Ratings and specifications

Performance data is typical with fluid at 21,8 cST (105 SUS) and 49°C (120°F)	
Max inlet pressure	350 bar (5000 psi)
Pressure range	10 = 5-107 bar (72-1550 psi), 20 = 14-220 bar (200-3200 psi), 35 = 22-350 bar (320-5000 psi)
Max press port 2	100 bar (1450 psi)
Max flow	1.5 L/min (.3 US GPM)
Hystersis	<12.5% without PWM
Dead band	10% approx
Response time	10 = 2-193 ms, 20 = 3-395 ms, 35 = 2-358 ms
Internal leakage	<5 ml/min
Temperature range	-30° to 120°C (-22° to 248°F)
Cavity	A879 (see Section M)
Electrical data	See coil data sheet
Torque cartridge into cavity	40 Nm (29.5 lbs ft)
Mounting position	For best results mount below reservoir oil level. If this is not feasible mount horizontally
Fluids	All general purpose hydraulics fluids such as: MIL-H-5606, SAE 10, SAE 20, etc
Seal material	Standard nitrile with PTFE back up rings
Filtration	BS5540/4 Class 18/13 (25 micron or better)
Nominal viscosity range	15 to 250 cSt
Standard housing materials	Aluminium
Coil Model Code	C16-*-*/19
Coil Weight	.3 kg (.6 lbs)
Weight	.25 kg (.55 lbs)
Voltage available	12/24 VDC
Seal kit	SK1119 (Nitrile) SK1119V (Viton®)

Viton is a registered trademark of E.I. DuPont

Performance curves

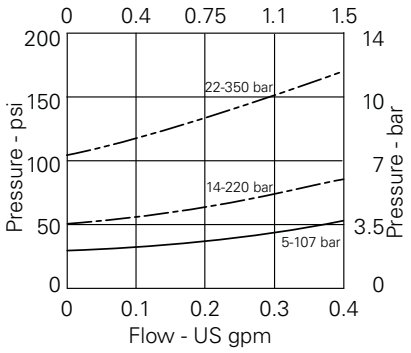

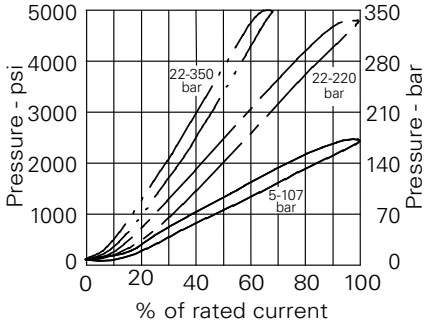

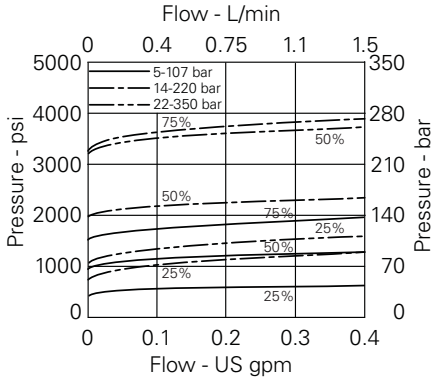

Where measurements are critical request certified drawings. We reserve the right to change specifications without notice.

PDR21A - Proportional valve

Proportional relief
1.5 L/min (.3 USgpm) • 350 bar (5000 psi)

Model code

PDR21A – N – 20 – 6 – H – 24 – 3W

1 2 3 4 5 6 7

1 Function
PDR21A - Normally open

2 Seal material
N - Nitrile
V - Viton

3 Pressure range
10 - 5 to 120 bar
20 - 10 to 240 bar

4 Manual override
6 - Screw

5 Coil termination
H - DIN43650
F - Flying Lead
DM - Deutsch moulded
Other terminations available on request.

6 Voltage
12 - 12 VDC
24 - 24 VDC

7 Port size

Code	Port size	Housing number	
		Aluminum	Steel
0	Cartridge only		
2W	1/4" BSP	A1485	A14128
3W	3/8" BSP	A1043	A14175
4T	1/4" SAE	A14842	-
6T	3/8" SAE	A15676	A14843

Dimensions
mm (inch)

Cartridge only

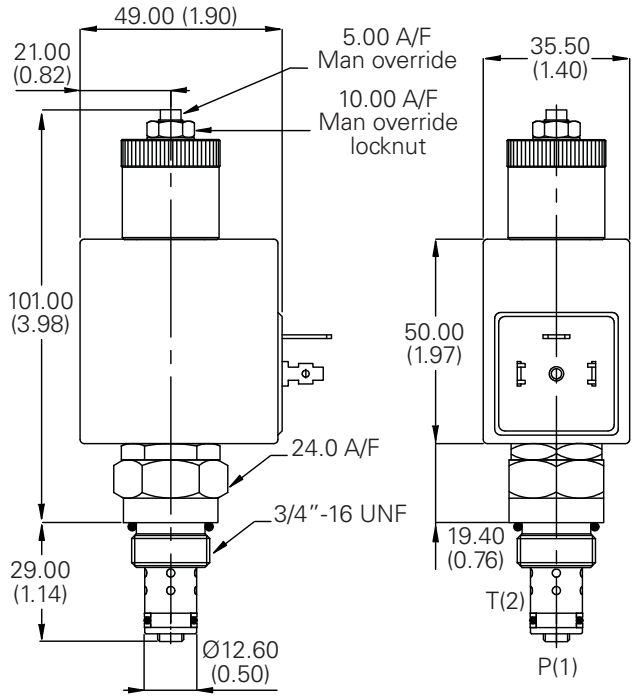

Installation drawing

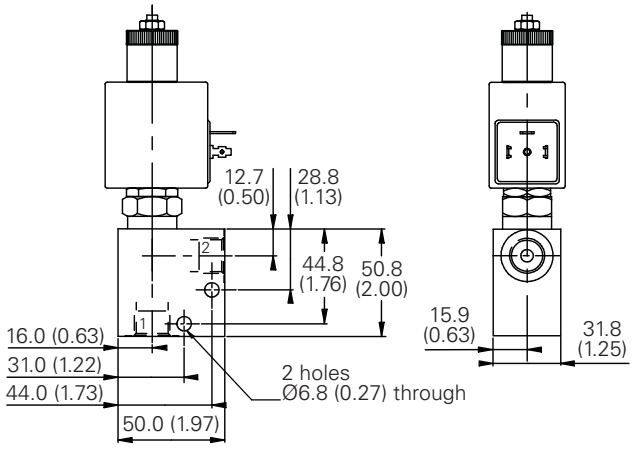

Where measurements are critical request certified drawings. We reserve the right to change specifications without notice.

IRV1-10 - Proportional valve

Proportional inverse relief, poppet
1 L/min (.25 USgpm) • 210 bar (3000 psi)

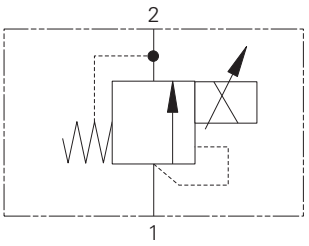

Operation

The IRV1-10 proportional relief is spring biased closed to the highest setting. Increasing current to the coil will proportionally decrease the pressure setting.

When the pressure at port 1 (inlet) is enough to overcome the spring force, the poppet lifts and allows flow from port 1 to port 2 (outlet).

Features

Hardened and ground components for accurate consistent control and a long life. IP69K Tough coil compatibility continuously rated.

Sectional view

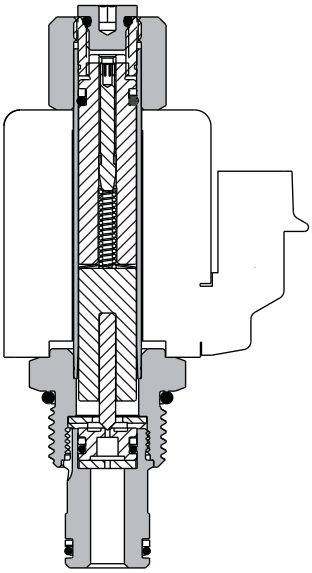

Performance data

Ratings and specifications

Performance data is typical with fluid at 21,8 cST (105 SUS) and 49°C (120°F)	
Typical application pressure	210 bar (3000 psi)
Cartridge endurance rating	1 million cycles
Cartridge fatigue pressure rating (NFPA/T2.6.1 R2-2000)	210 bar (3000 psi)
Maximum pressure setting range	35-210 bar (3000 psi)
Rated flow	1 L/min, (0.25 USgpm)
Nominal supply voltage	12/24 V
Temperature range	-30° to 90°C (-22° to 194°F)
Maximum oil temperature	120°C (248°F)
Maximum internal oil temperature	200°C (392°F)
Cavity	C-10-2
Fluids	All general purpose hydraulic fluids such as: MIL-H-5606, SAE 10, SAE 20, etc.
Filtration	Cleanliness code 18/16/13
Housing material (standard)	Aluminum
Hysterisis	100 psi with dither
Weight cartridge only	0,13 kg (.3 lbs)
Seal kit	565803 (Buna-N), 566086 (Viton®)

Viton is a registered trademark of E.I. DuPont
Endurance tested to 1 million cycles at full rated flow and pressure.

Description

This is a proportionally controlled inverse pilot poppet relief valve. Ideal for use with logic elements to control fan or brush pressure where full speed or force is required under electrical failure.

Pressure drop

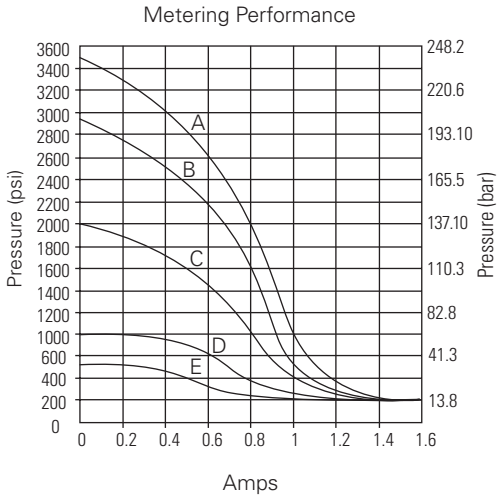

Pressure Differential
A - 3500 psi
B - 3000 psi
C - 2000 psi
D - 1000 psi
E - 500 psi

Where measurements are critical request certified drawings. We reserve the right to change specifications without notice.

IRV1-10 - Proportional valve

Proportional inverse relief, poppet
1 L/min (.25 USgpm) • 210 bar (3000 psi)

Model code

IRV1 10 – * – ** – * – ** – *** – * – * – * – * – ** – **

1 2 3 4 5 6 7 8 9 10 11 12

1 Function

IRV1 - Inverse proportional relief

2 Size

10 - 10 size

3 Seal material

Blank - Buna-N
V - Viton®

4 Factory set pressure

User requested in **100 psi** increments. Max pressure setting range 500 - 3000 psi

Example

15 - 1500 psi
30 - 3000 psi

5 Housing material

Blank - Cartridge only
A - Aluminum

6 Port size

Code	Port size	Housing number	
		Aluminum single	Aluminum single
		Light duty	Fatigue rated
0	Cartridge only		
6T	SAE 6	566150	
8T	SAE 8	566151	
2G	1/4" BSPP		5986433-001
3G	3/8" BSPP		876703
6H	SAE 6		876700
8H	SAE 8		876701

See section J for housing details.

7 Coil voltage

00 - No coil
010 - 10VDC
012 - 12VDC
024 - 24VDC

8 Type of power

Blank - No coil
D - DC w/o diode
B - DC with diode

9 Connector type

Blank - No coil
G - ISO 4400 DIN 43650
Q - Spade Terminals
W - Flying Lead
N - Deutsch (DC only)
Y - Amp JR (DC only)
P - Conduit

For coil part numbers and dimensions see section C.

10 Coil series

Blank - No coil
J - J Series, 20 W

For coil part numbers and dimensions see section C.

11 Coil special features

Blank - No coil
00 - No special feature

12 Valve special features

Blank - No coil

Dimensions

mm (inch)

Cartridge only

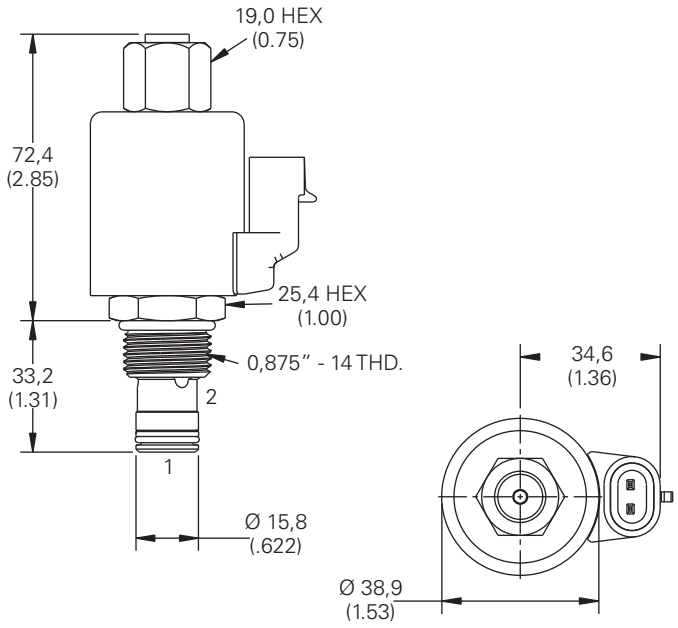

Installation drawing

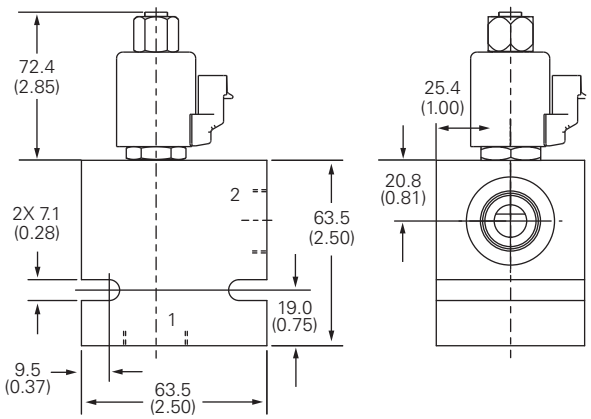

Where measurements are critical request certified drawings. We reserve the right to change specifications without notice.

IRV2-10 - Proportional valve

Proportional inverse relief, Spool
57 L/min (15 USgpm) • 240 bar (3500 psi)

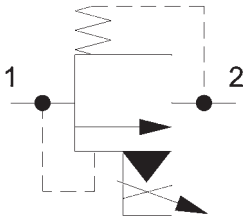

Operation

The IRV2-10 proportional relief is spring biased closed to highest setting. Increasing current to the coil will proportionally decrease the pressure setting.

This valve remains closed between port 1 and 2 until the predetermined pressure setting has been reached at port 1, overcoming the spring force and opening the spool to allow flow from port 1 to 2.

Features

Hardened and ground components for accurate consistent control and a long life. Pilot style to give accurate pressure control over varying flows. IP9K Tough coil compatibility continuously rated.

Profile view

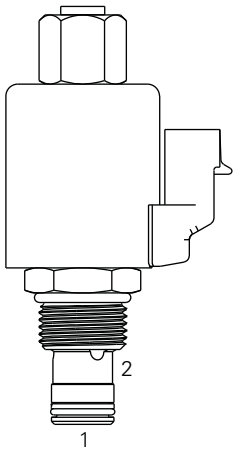

Performance data

Ratings and specifications

Performance data is typical with fluid at 21,8 cST (105 SUS) and 49°C (120°F)	
Typical application pressure (all ports)	240 bar (3500 psi)
Cartridge fatigue pressure (infinite life)	240 bar (3500 psi)
Maximum pressure setting range	35 bar to 240 bar (500 to 3500 psi)
Rated Flow	57 lpm (15 US gpm)
Nominal supply voltage	12/24 V
Cavity	C-10-2
Internal leakage, port 1 to port 2	114 cm^3/min. (7 in^3/min) @ 210 bar
Standard housing material	Aluminum or steel
Fluids	All general purpose hydraulic fluids such as: MIL-H-5606, SAE10, SAE20 etc
Filtration	Cleanliness code 18/16/13
Temperature range	-40° to 120° C (-40° to 248° F)
Hysterisis	100 psi with dither
Weight cartridge only	0.13 kg (.3 ibs)
Seal Kit	565803 (Buna-N), 56086 (Viton®)

Viton is a registered trademark of E.I. DuPont.
Endurance tested to 1 million cycles at full rated flow and pressure.

Description

This is a inverse proportionally controlled spool type two stage relief valve. Ideal for use to control the fan drive or brush pressure where full speed or force is required under electrical failure.

Pressure drop

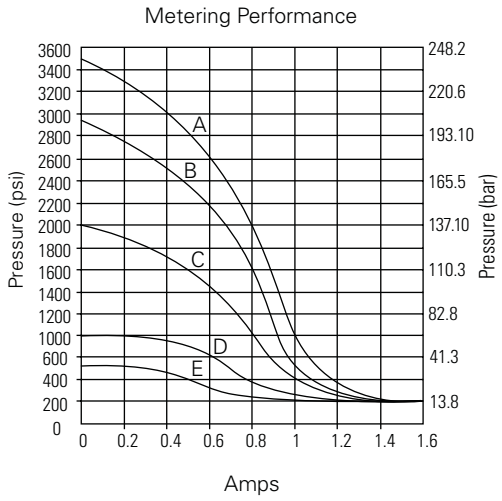

Pressure Differential
A - 3500 psi
B - 3000 psi
C - 2000 psi
D - 1000 psi
E - 500 psi

Where measurements are critical request certified drawings. We reserve the right to change specifications without notice.

IRV2-10 - Proportional valve

Proportional inverse relief, Spool
57 L/min (15 USgpm) • 240 bar (3500 psi)

Model code

IRV2	10	–	*	–	**	–	*	–	**	–	***	–	*	–	*	–	*	–	*	–	**
1	2		3		4		5		6		7		8		9		10		11		12

1 Function

IRV2 - Inverse proportional relief

2 Size

10 - 10 size

3 Seal material

Blank - Buna-N
V - Viton®

4 Factory set pressure

User requested in **100 psi** increments. Max pressure setting range 500 - 3000 psi

Example

15 - 1500 psi
30 - 3000 psi

5 Housing material

Blank - Cartridge only
A - Aluminum

6 Port size

Code	Port size	Housing number	
		Aluminum Single Light duty	**Aluminum Single Fatigue rated**
0	Cartridge only		
6T	SAE 6	566150	
8T	SAE 8	566151	
2G	1/4" BSPP		5986433-001
3G	3/8" BSPP		876703
6H	SAE 6		876700
8H	SAE 8		876701

See section J for housing details.

7 Coil voltage

00 - No coil
010 - 10VDC
012 - 12VDC
024 - 24VDC

8 Type of power

Blank - No coil
D - DC w/o diode
B - DC with diode

9 Connector type

Blank - No coil
G - ISO 4400 DIN 43650
Q - Spade Terminals
W - Flying Lead
N - Deutsch (DC only)
Y - Amp JR (DC only)
P - Conduit

For coil part numbers and dimensions see section C.

10 Coil series

Blank - No coil
J - J Series, 20 W

For coil part numbers and dimensions see section C.

11 Coil special features

Blank - No coil
00 - No special feature

12 Valve special features

Blank - No coil

Dimensions

mm (inch)

Cartridge only

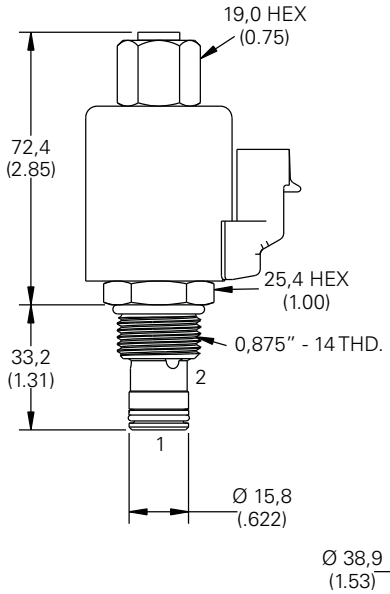

Installation drawing

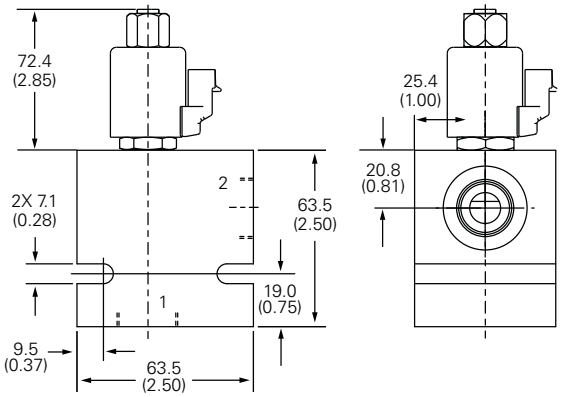

Where measurements are critical request certified drawings. We reserve the right to change specifications without notice.

ERV1-10 - Proportional valve

Proportional relief, spool
3.8 - 6.0 L/min (1 - 15 USgpm) • 240 bar (3500 psi)

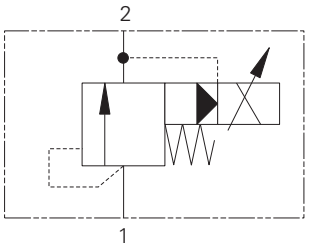

Operation

This valve remains closed between port 1 and 2 until the predetermined pressure setting has been reached at port 1, overcoming the electrical force and opening the spool to allow flow from port 1 to port 2.

Features

Hardened and ground components for accurate consistent control and a long life. Pilot style to give accurate pressure control over varying flows. IP69K Tough coil compatibility continuously rated.

Sectional view

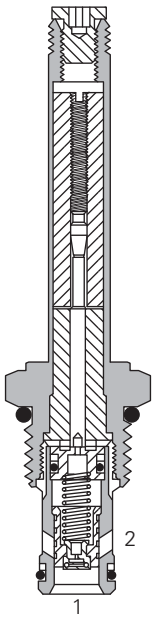

Performance data

Ratings and specifications

Performance data is typical with fluid at 21,8 cST (105 SUS) and 49°C (120°F)	
Typical application pressure (all ports)	2-240 bar (30-3500 psi)
Cartridge fatigue pressure (infinite life)	240 bar (3500 psi)
Rated flow	3.8-60,0 L/min (1-15 USgpm)
Temperature range	-40° to 120°C (-40° to 248°F)
Cavity	C-10-2
Fluids	All general purpose hydraulic fluids such as: MIL-H-5606, SAE 10, SAE 20 etc.
Filtration	Cleanliness code 18/16/13
Housing material (standard)	Aluminum
Weight including coil	0,44 kg (.98 lbs)
Seal kit	565803 (Buna-N), 889627 (Viton®)

Viton is a registered trademark of E.I. DuPont

Description

This is a proportional internally pilot operated screw in cartridge relief valve. Good control over large flows for the physical size of the cartridge. Ideal for the control of pressure under varying flow conditions.

Pressure drop curves

Pressure override, energized

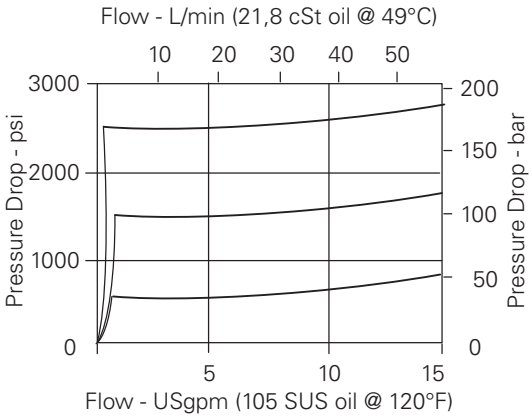

Pressure override, de-energized

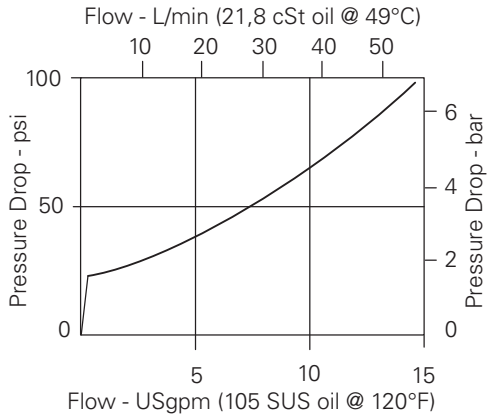

Performance curves

Zero outlet pressure

Cartridges only

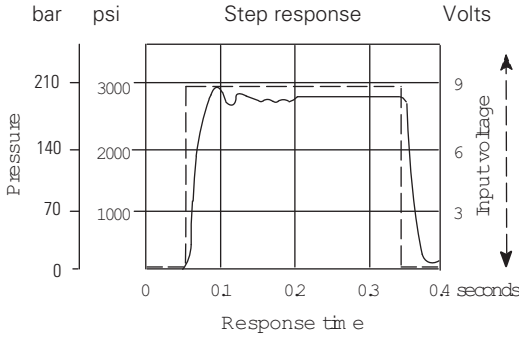

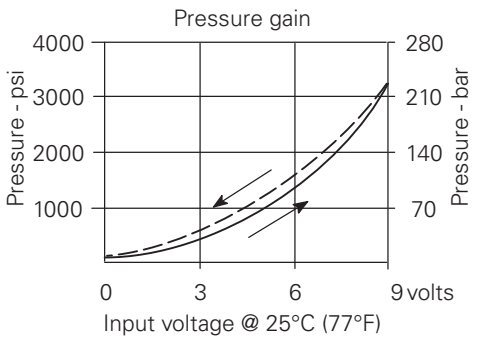

Where measurements are critical request certified drawings. We reserve the right to change specifications without notice.

ERV1-10 - Proportional valve

Proportional relief, spool
3.8 L/min (60 USgpm) • 240 bar (3500 psi)

Model code

ERV1 – 10 – (V) – ** – ** – * – * – 00**

1 2 3 4 5 6 7 8

1 Function

ERV1 - Proportional relief valve

2 Size

10 - 10 size

3 Seal material

Blank - Buna-N
V - Viton®

4 Maximum pressure

Customer to specify settings in increments of 7 bar (100 psi) and coded in hundreds of psi within the 35-210 bar range (500-3000 psi) range.

Example: 5-35,0 (500 psi)

5 Port size

Code	Port size	Housing number
		Aluminum single
0	Cartridge only	
6T	SAE 6	566151*
2G	1/4" BSPP	876702*
3G	3/8" BSPP	876703
6H	SAE 6	876700
8H	SAE 8	876701

*Light duty housing.
See section J for housing details.

6 Voltage rating

00 - No coil
12D - 12VDC
24D - 24VDC
12B - 12VDC/w diode*
24B - 24VDC/w diode*

*Optional arc suppression diode.

Note: This valve uses the standard J series coils, see section C for coil part numbers and specifications.

7 Connector types

Blank - No coil
G - DIN 43650
Q - Spade Terminals
W - Flying Lead
N - Deutsch
Y - Amp JR

For coil part numbers and dimensions see section C.

8 Special features

00 - None

Only required if valve has special features, omitted if "00."

Dimensions
mm (inch)

Torque cartridge in aluminum housing 47-54 Nm (35-40 ft lbs).

Cartridge only

Valve is shown with "W" coil.

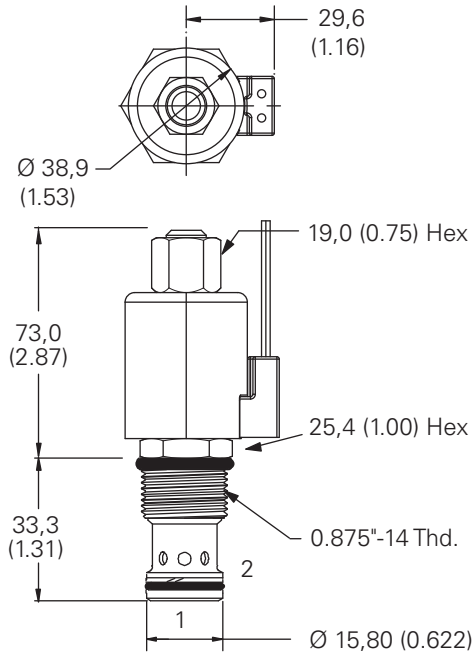

Installation drawing

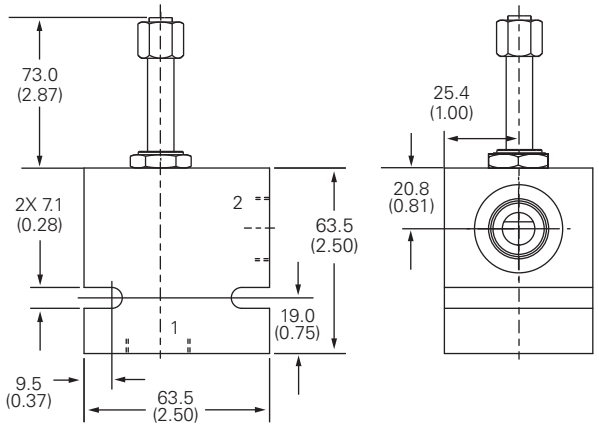

⚠ Warning

Maintain 5-8 Nm(4-6 ft lbs) maximum torque on valve tube nut.Over tightening may cause valve failure.

Where measurements are critical request certified drawings. We reserve the right to change specifications without notice.

ERV1-16 - Proportional valve

Proportional relief, spool
Up to 132 L/min (35 USgpm) • 210 bar (3000 psi)

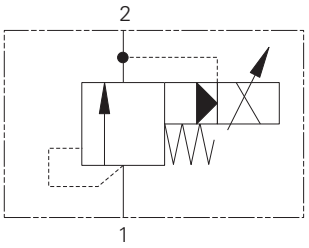

Operation

This valve remains closed between port 1 and 2 until the predetermined pressure setting has been reached at port 1, overcoming the electrical force and opening the spool to allow flow from port 1 to port 2.

Features

Hardened and ground components for accurate consistent control and a long life. Pilot style to give accurate pressure control over varying flows. IP69K Tough coil compatibility continuously rated.

Sectional view

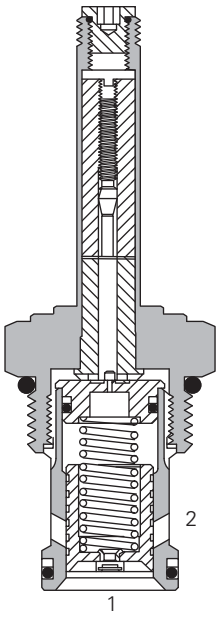

Description

This is a proportional internally pilot operated screw in cartridge relief valve. Good control over large flows for the physical size of the cartridge. Ideal for the control of pressure under varying flow conditions.

Performance data

Ratings and specifications

Performance data is typical with fluid at 21,8 cST (105 SUS) and 49°C (120°F)	
Typical application pressure (all ports)	3,5-210 bar (50-3000 psi)
Cartridge fatigue pressure (infinite life)	210 bar (3000 psi)
Rated flow	7,6-132,0 L/min (2-35 USgpm)
Temperature range	-40° to 120°C (-40° to 248°F)
Cavity	C-16-2
Fluids	All general purpose hydraulic fluids such as: MIL-H-5606, SAE 10, SAE 20 etc.
Filtration	Cleanliness code 18/16/13
Housing material (standard)	Aluminum
Weight including coil	0,44 kg (.98 lbs)
Seal kit	565810 (Buna-N), 889609 (Viton®)

Viton is a registered trademark of E.I. DuPont

Pressure drop curves

Pressure override, energized

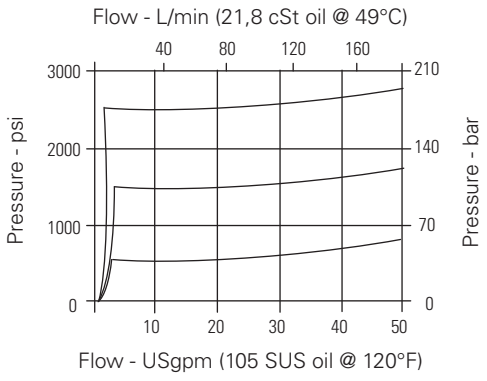

Pressure override, de-energized

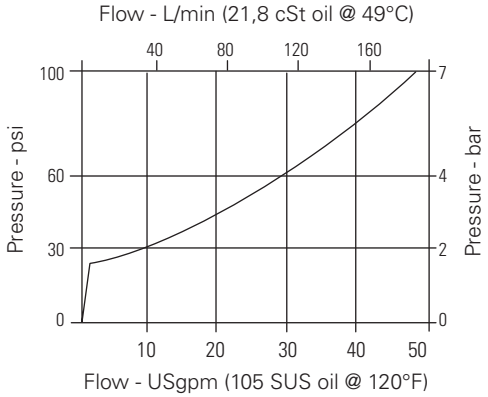

Performance curves

Zero outlet pressure

Cartridges only

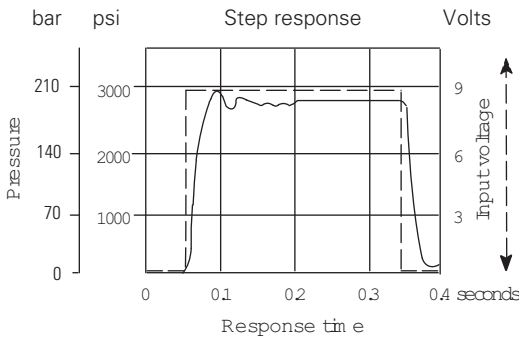

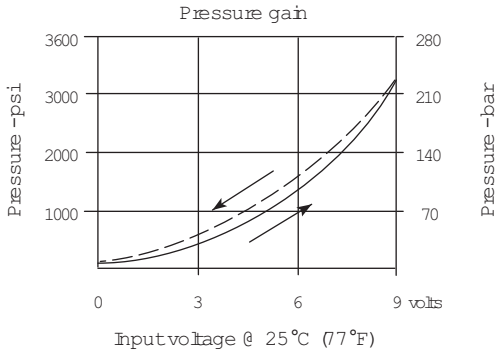

Where measurements are critical request certified drawings. We reserve the right to change specifications without notice.

ERV1-16 - Proportional valve

Proportional relief, spool
Up to 132 L/min (35 USgpm) • 210 bar (3000 psi)

Model code

ERV1 – 16 (V) – ** – * – *** – * – 00**

1 2 3 4 5 6 7 8

1 Function

ERV1 - Proportional relief valve

2 Size

16 - 16 size

3 Seal material

Blank - Buna-N
V - Viton®

4 Maximum pressure

Customer to specify settings in increments of 7 bar (100 psi) and coded in hundreds of psi within the 35-210 bar range (500-3000 psi) range.

Example: 5-35,0 (500 psi)

5 Port size

Code	Port size	Housing number
		Aluminum single
0	Cartridge only	
12T	SAE 12	566149*
4G	1/2" BSPP	876716*
6G	3/4" BSPP	876718
10H	SAE 10	876717
12H	SAE 12	566113

*Light duty housing.
See section J for housing details.

6 Voltage rating

00 - No coil
12D - 12VDC
24D - 24VDC
12B - 12VDC/w diode*
24B - 24VDC/w diode*

*Optional arc suppression diode.
Note: This valve uses the standard J series coils, see section C for coil part numbers and specifications.

7 Connector types

Blank - No coil
G - DIN 43650
Q - Spade Terminals
W - Flying Lead
N - Deutsch
Y - Amp JR

For coil part numbers and dimensions see section C.

8 Special features

00 - None

Only required if valve has special features, omitted if "00."

Dimensions

mm (inch)

Torque cartridge in aluminum housing 108-122 Nm (80-90 ft lbs).

Cartridge only

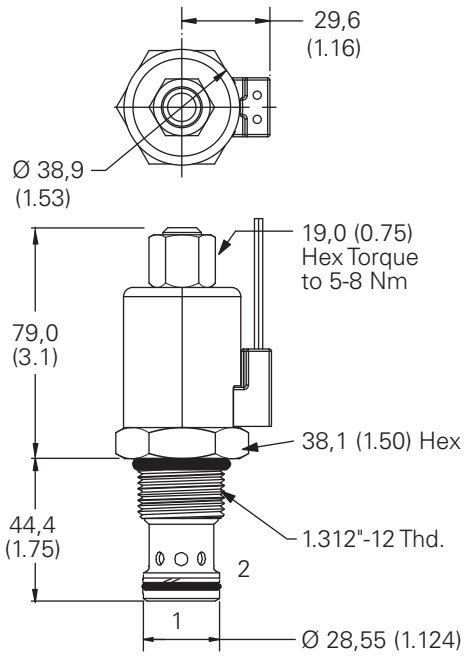

Installation drawing

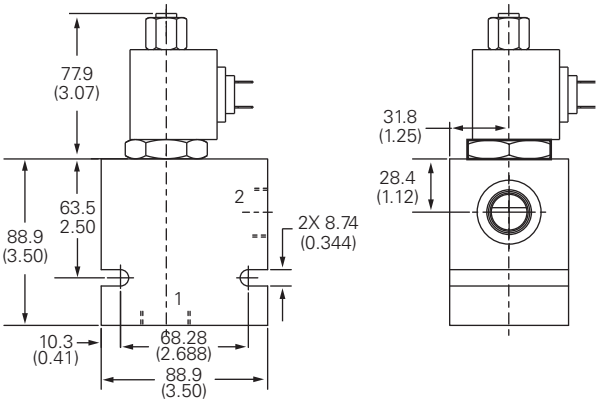

⚠ Warning

Maintain 5-8 Nm (4-6 ft lbs) maximum torque on valve tube nut. Over tightening may cause valve failure.

Where measurements are critical request certified drawings. We reserve the right to change specifications without notice.

PPD22A - Proportional valve

Proportional reducing/relief, spool
20 L/min (5.4 USgpm) • 210 bar (3000 psi)

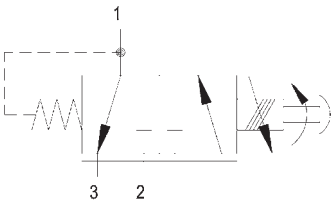

Operation

In the de-energized position, pressure inlet port 2 is open to reduced pressure port 1, return port 3 is closed . As electrical current is increased, the setting of the valve increases allowing pressure at port 1 to increase. If the pressure at port 1 exceeds the setting of the valve, the spool will shift further and relieve to port 3.

Features

- High flow capacity with reduced space requirements.
- No dynamic seals.
- Standard valve bodies and common cavities.
- One-piece encapsulated coil with minimal amperage draw.
- Oil immersed armature solenoid.
- Various coil terminals and voltages.
- Coil interchangeability with valves of same series.
- Manual override, seal variations and other options available.
- Sealed coil arrangement to protect stem from corrosion.

Sectional view

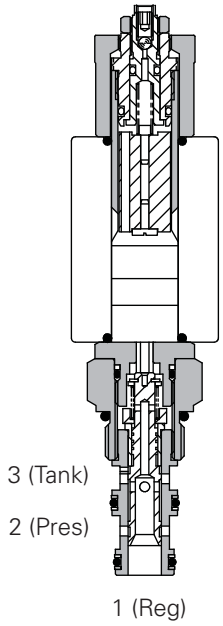

Description

This is a low pressure proportional direct acting pressure reducing valve with a reverse relief screw in cartridge valve. It is ideal for the control of compensators on a pump or brake and clutch systems on a transmission circuit.

Performance data

Ratings and specifications

Performance data is typical with fluid at 32 cST (150 SUS)	
Max inlet pressure	210 bar (3000 psi)
Max regulated pressure	19 watt coil 24 bar, 29 watt coil 28 bar
Max flow	18.6 L/min (5 USgpm) 19 watt coil 20 L/min (5.4 USgpm) 29 watt coil
Hystersis	16% max without PWM
Frequency	200 Hz
Dead band	19% approx
Response time	10 = 2-193 ms, 20 = 3-395 ms, 35 = 2-358 ms
Internal leakage	Up to 50 mL/min at 210 bar differential
Temperature range	-30° to 120°C (-22° to 248°F)
Cavity	A3531 (see Section M)
Torque cartridge into cavity	30 Nm (22 lbs ft)
Mounting position	Unrestricted
Fluids	All general purpose hydraulics fluids such as: MIL-H-5606, SAE 10, SAE 20, etc
Seal material	Standard nitrile with PTFE back up rings
Filtration	BS5540/4 Class 18/13 (25 micron or better)
Nominal viscosity range	15 to 250 cSt
Standard housing materials	Aluminium
Coil weight	.3 kg (.6 lbs)
Weight cartridge only	.25 kg (.55 lbs)
Seal kit	SK1119 (Nitrile) SK1119V (Viton®)
Coil part number	C16*-*/19 (PPD21A) C16-*-*/29 (PPD21H)
Voltage available	12, 24 VDC

Viton is a registered trademark of E.I. DuPont

Pressure Drop

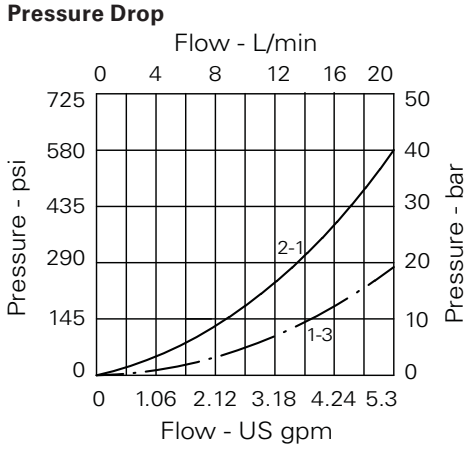

Performance curve

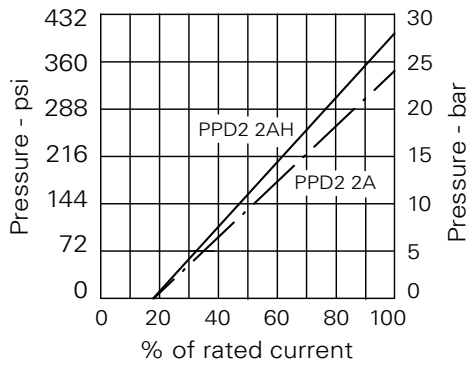

Where measurements are critical request certified drawings. We reserve the right to change specifications without notice.

PPD22A - Proportional valve

Proportional Reducing/Relief, Spool
20 L/min (5.4 USgpm) • 210 bar (3000 psi)

Model code

PPD22A N – H – 6 – 24 – 3W

1 2 3 4 5 6

1 Function
PPD22A - Standard
PPD22H - Heavy duty

2 Seal material
N - Nitrile
V - Viton®

3 Coil termination
H - DIN43650
F - Flying Lead
DM - Deutsch moulded
Other terminations available on request.

4 Manual override
6 - Screw Type Manual Override

5 Voltage
12 - 12 VDC
24 - 24 VDC

6 Port size

Code	Port size	Housing number
		Aluminum single
0	Cartridge only	
2W	1/4" BSP	A7724
3W	3/8" BSP	A6684
6T	3/8" SAE	B6516

See section J for housing details.

Dimensions
mm (inch)

Cartridge only

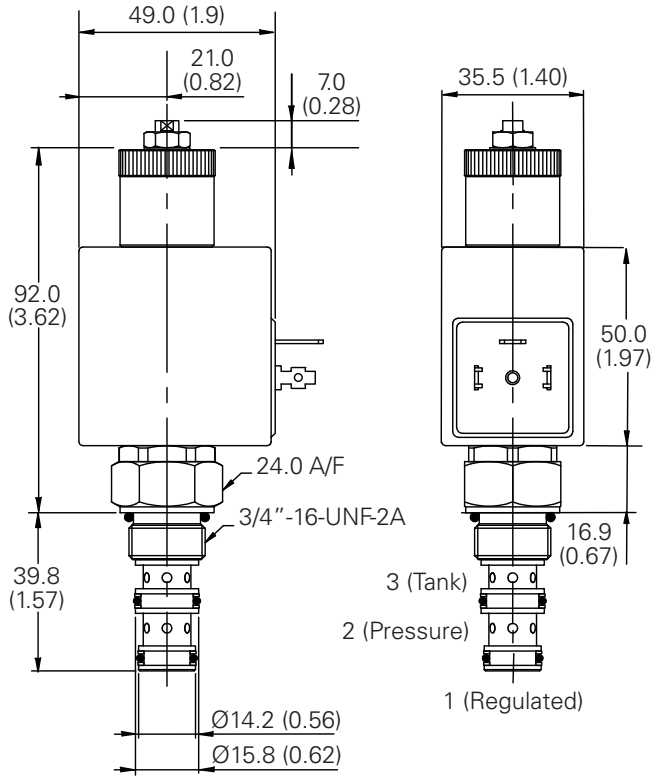

Installation drawing

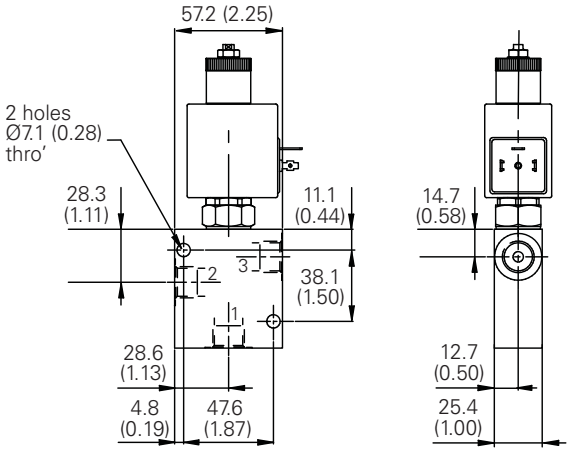

Where measurements are critical request certified drawings. We reserve the right to change specifications without notice.

EPRV2-8 - Proportional valve

Proportional reducing/relief, spool
7.6 L/min (2 USgpm) • 35 bar (500 psi)

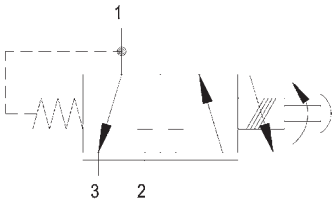

Operation

In the de-energized position, pressure inlet port 2 is closed and reduced pressure port 1 is open to return port 3. As electrical current is increased, port 2 opens to port 1 and port 3 closes, proportionally increasing pressure at port 1.

If the pressure at port 1 exceeds the setting of the valve, the spool will shift further and relieve to port 3.

Features

Hardened and ground components for accurate consistent control and a long life. IP69K Tough coil compatibility continuously rated.

B

Sectional view

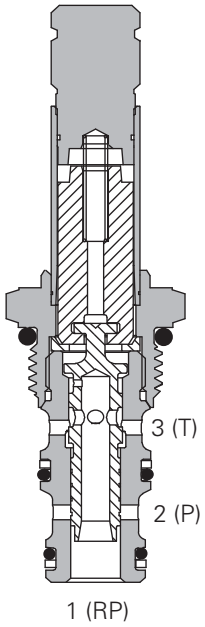

Description

This is a low pressure proportional direct acting pressure reducing valve with a reverse relief screw in cartridge valve. It is ideal for the control of compensators on a pump or brake and clutch systems on a transmission circuit.

Performance data

Ratings and specifications

Performance data is typical with fluid at 21,8 cST (105 SUS) and 49°C (120°F)	
Maximum inlet pressure	35 bar (500 psi)
Cartridge fatigue pressure (infinite life)	35 bar (500 psi)
Reduced pressure range	0-22 bar (0-320 psi)
Maximum operating flow	7,6 L/min (2 USgpm)
Temperature range	-40° to 120°C (-40° to 248°F)
Cavity	C-8-3
Fluids	All general purpose hydraulic fluids such as: MIL-H-5606, SAE 10, SAE 20 etc.
Filtration	Cleanliness code 18/16/13
Recommended PWM frequency	150 Hz
Hysterisis @ 150 Hz PWM	5%
Housing material (standard)	Aluminum
Weight including coil	0,29 kg (.64 lbs)
Seal kit	02-179451 (Buna-N), 02-179452 (Viton®)

Viton is a registered trademark of E.I. DuPont

Pressure drop curves

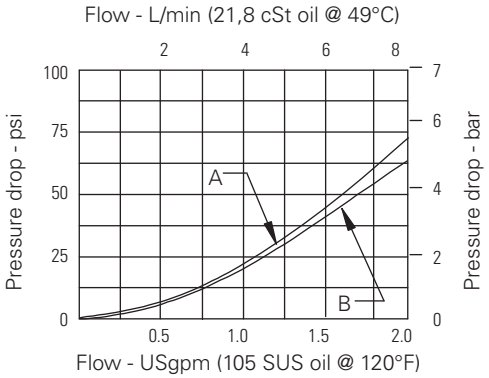

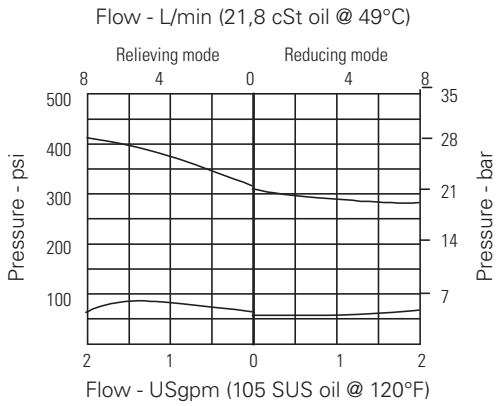

A - Port 1 to port 3 B - Port 2 to port 1

Performance curves

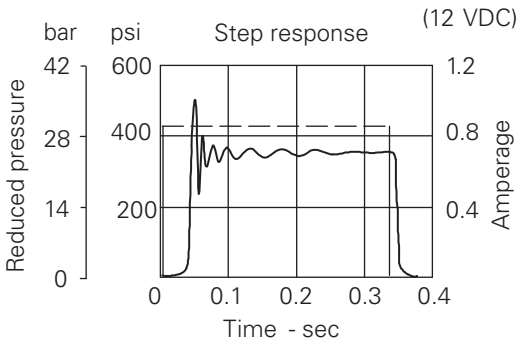

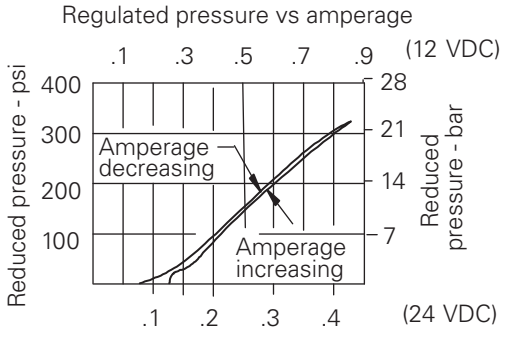

Where measurements are critical request certified drawings. We reserve the right to change specifications without notice.

EPRV2-8 - Proportional valve

Proportional reducing/relief, spool
7.6 L/min (2 USgpm) • 35 bar (500 psi)

Model code

EPRV2 – 8 (V) – (A) – ** – * – * * – 00**

1 2 3 4 5 6 7 8 9

1 Function

EPRV2 - Proportional reducing/relieving valve

2 Size

8 - 8 size

3 Seal material

Blank - Buna-N
V - Viton®

4 Valve housing material

Omit for cartridge only

A - Aluminum

5 Port size

Code	Port size	Housing number
		Aluminum single
0	Cartridge only	
4T	SAE 4	02-160741
6T	SAE 6	02-160742
2G	1/4" BSPP	02-160739
3G	3/8" BSPP	02-160740

See section J for housing details.

6 Voltage rating

00 - No coil
12D - 12VDC
24D - 24VDC
12B - 12VDC/w diode*
24B - 24VDC/w diode*

*Optional arc suppression diode.
Note: This valve uses the standard S series coils, see section C for coil part numbers and specifications.

7 Connector types

Blank - No coil
G - DIN 43650
Q - Spade Terminals
W - Flying Lead
N - Deutsch
Y - Amp JR

For coil part numbers and dimensions see section C.

8 Coil

S - S series coils

9 Special features

00 - None

Only required if valve has special features, omitted if "00."

Dimensions

mm (inch)

Torque cartridge in aluminum or steel housing 34-41 Nm (25-30 ft lbs)

Cartridge only

Valve is shown with "N" coil.

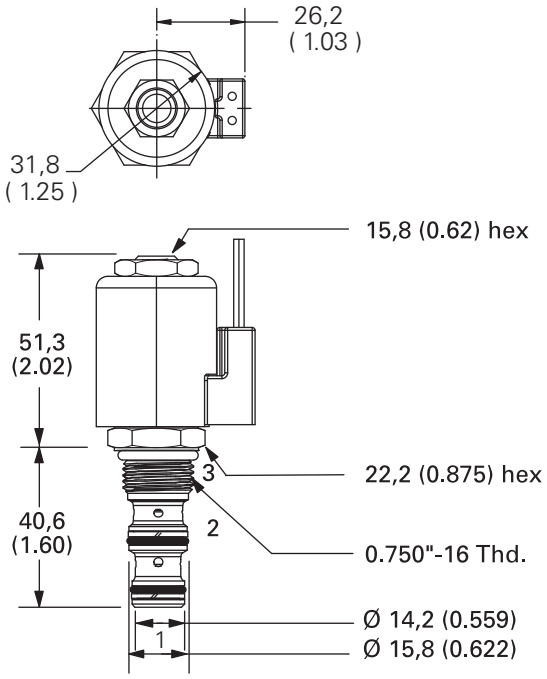

Installation drawing

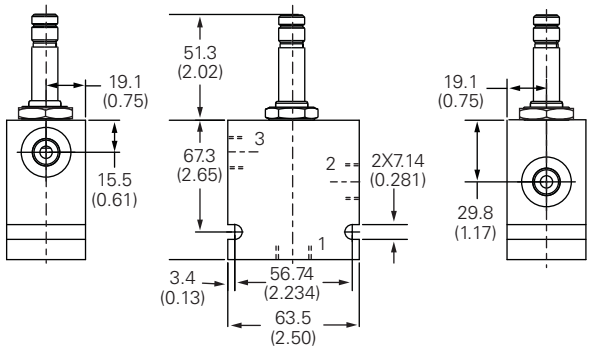

⚠ Warning

Maintain 5-8 Nm (4-6 ft lbs) maximum torque on valve tube nut.Over tightening may cause valve failure.

Where measurements are critical request certified drawings. We reserve the right to change specifications without notice.

EPPV5 - Proportional Valve

Proportional pressure reducing valve
8.0 L/min (2.1 USgpm) • 50 bar (725 psi)

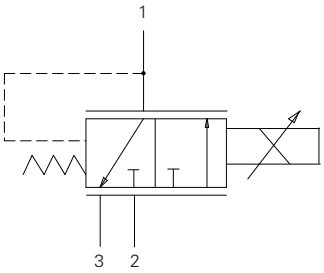

Operation

In the de-energized position, pressure inlet port 2 is closed and reduced pressure port 1 is open to return port 3. As electrical current is increased, port 2 opens to port 1 and port 3 closes, proportionally increasing pressure at port 1.

If the pressure at port 1 exceeds the setting of the valve, the spool will shift further and relieve to port 3.

Features

- Compact design allows for more flexible machine design
- Excellent repeatability, hysteresis and resolution due to bearing design
- Quality standard reduces maintenance and downtime costs

Profile view

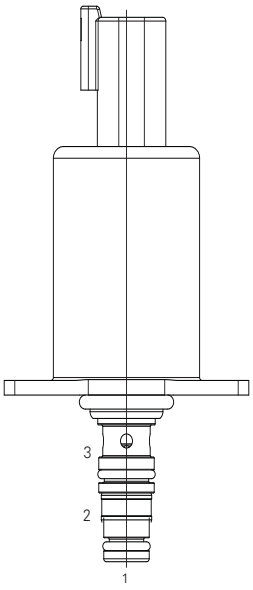

Performance data

Ratings and Specifications

Performance data is typical with fluid at 21,8 cST (105 SUS) and 49°C (120°F)	
Maximum inlet pressure, A(1) and P(2) Maximum inlet pressure, Tank (3)	50 bar (725 psi) 30 bar (425 psi)
Reduced pressure range	In accordance with control pressure range in model code
Maximum operating flow	8.0 L/min (2 USgpm)
Temperature range	-40° to 105°C (-40° to 221°F)
Cavity	TC06025
Fluids	Mineral oil according to DIN 51524
Filtration	Cleanliness code 20/18/15
Recommended PWM frequency	100 Hz
Hysterisis @100 Hz PWM	<0.7 bar (pA = 20) <1.0 bar (pA = 25) <1.5 bar (pA = 35)
Resistance	4.72 ohms +/-5% for 12V 20.8 ohms +/-5% for 24V
Current	1500 mA for 12V 750 mA for 24V
Protection class	Up to IP6K6 / IPX9K

Description

This is a low pressure proportional direct acting pressure reducing cartridge valve. It is ideal for the control of compensators on a pump or brake, proportional valve spool and clutch systems on a transmission circuit .

Pressure drop curves

Port A to T

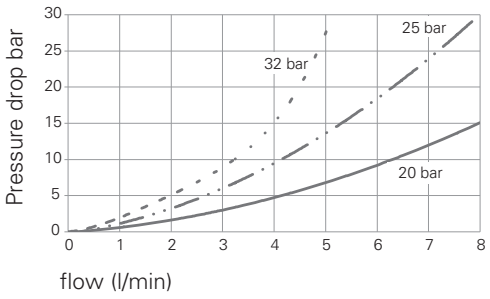

Port P to A

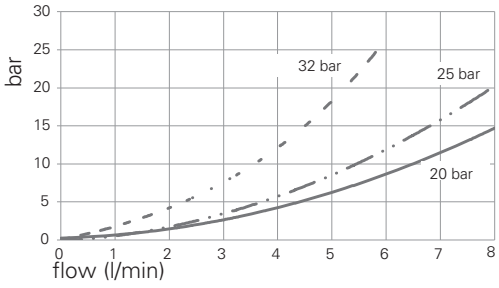

Performance curves

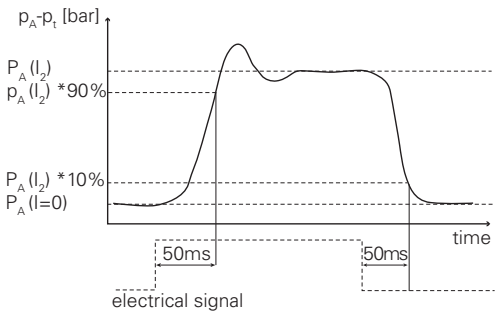

Regulated pressure vs. amperage

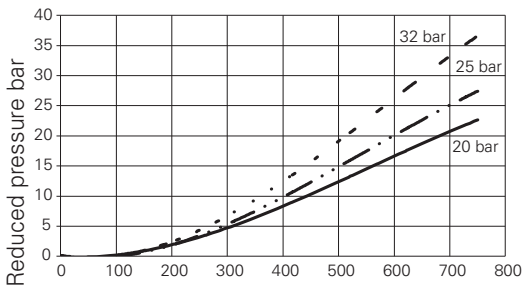

Where measurements are critical request certified drawings. We reserve the right to change specifications without notice.

EPPV5 - Proportional Valve

Proportional pressure reducing valve/relief, spool
8.0 L/min (2.1 USgpm) • 50 bar (725 psi)

Model code

EPPV5	–	H	0	–	**	–	0	–	**	–	D	D	–	00
1		2	3		4		5		6		7	8		9

1 Function
EPPV5 - Proportional pressure reducing valve

2 Seal material
H - Buna-HBNR

3 Manual override 0ption
0- Manual override not available

4 Control pressure
20 - 20 bar (290 psi)
25 - 25 bar (360 psi)
32 - 32 bar (460 psi)

5 Port size

Code	Port size
0	Cartridge only

6 Voltage Rating
12 - 12V
24 - 24V

7 Voltage type
D - DC

8 Connector type
N - Deutsch DT04-2P

9 Special features
00 - None

Cartridge only

Dimensions (mm)

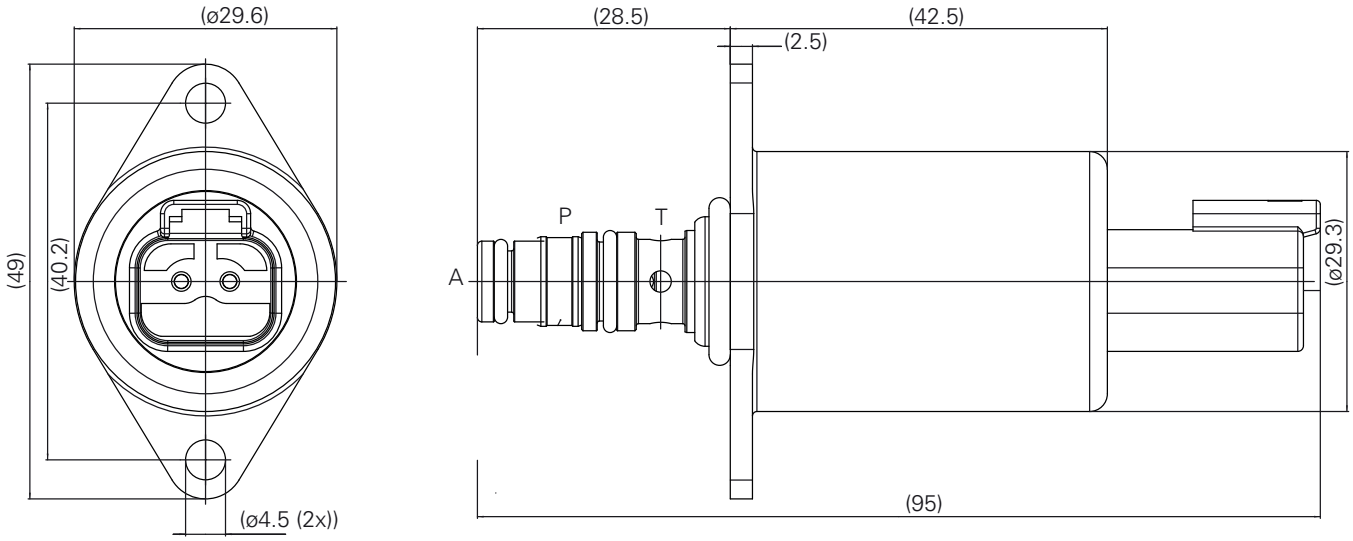

Where measurements are critical request certified drawings. We reserve the right to change specifications without notice.

EPPV6 - Proportional Valve

Proportional pressure reducing valve
8.0 L/min (2.1 USgpm) • 50 bar (725 psi)

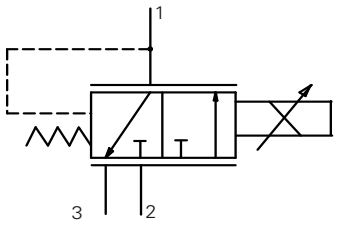

Operation

In the de-energized position, pressure inlet port 2 is closed and reduced pressure port 1 is open to return port 3. As electrical current is increased, port 2 opens to port 1 and port 3 closes, proportionally increasing pressure at port 1.

If the pressure at port 1 exceeds the setting of the valve, the spool will shift further and relieve to port 3.

Features

- Compact design allows for more flexible machine design
- Excellent repeatability, hysteresis and resolution due to bearing design
- Quality standard reduces maintenance and downtime costs
- Available with manual override option

Profile view

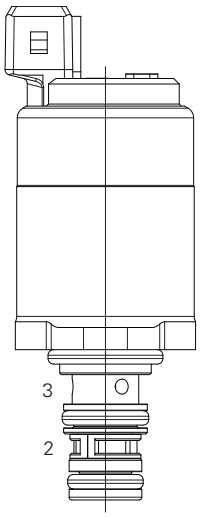

Performance data

Ratings and Specifications

Performance data is typical with fluid at 21,8 cST (105 SUS) and 49°C (120°F)	
Maximum inlet pressure, A(1) and P(2) Maximum inlet pressure, Tank (3)	50 bar (725 psi) 30 bar (425 psi)
Reduced pressure range	In accordance with control pressure range in model code
Maximum operating flow	8.0 L/min (2.1 USgpm)
Temperature range	-40° to 105°C (-40° to 221°F)
Cavity	TC06023
Fluids	Mineral oil according to DIN 51524
Filtration	Cleanliness code 20/18/15
Recommended PWM frequency	100 Hz
Hysterisis @100 Hz PWM	<0.7 bar (pA = 20) <1.0 bar (pA = 25) <1.5 bar (pA = 35)
Resistance	5.3 ohms +/-5% for 12V 21.2 ohms +/-5% for 24V
Current	1500 mA for 12V 750 mA for 24V
Protection class	Up to IP6K6 / IPX9K

Description

This is a low pressure proportional direct acting pressure reducing cartridge valve with manual override available. It is ideal for the control of compensators on a pump or brake and clutch systems on a transmission circuit.

Pressure drop curves

Port A to T

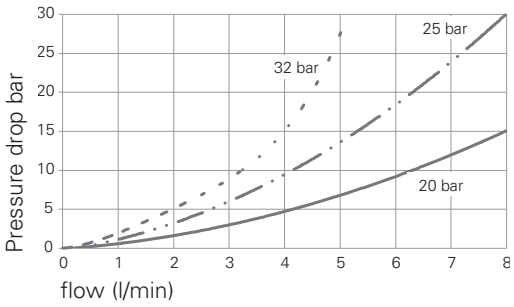

Port P to A

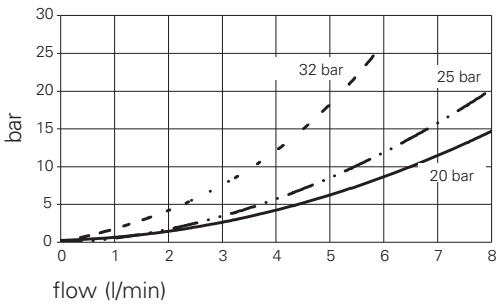

Performance curves

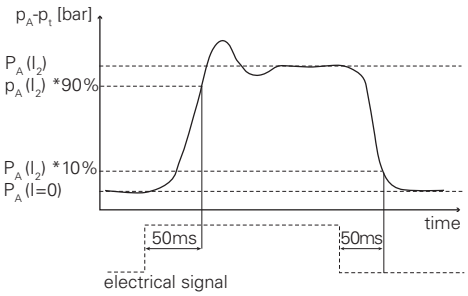

Regulated pressure vs. amperage

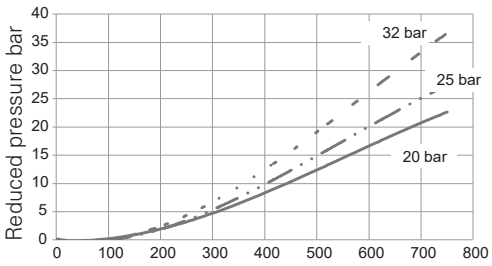

Where measurements are critical request certified drawings. We reserve the right to change specifications without notice.

EPPV6 - Proportional Valve

Proportional pressure reducing valve/relief, spool
8.0 L/min (2.1 USgpm) • 50 bar (725 psi)

Model code

EPPV6	–	H	M	–	**	–	0	–	**	–	D	Y	–	00
1		2	3		4		5		6		7	8		9

1 Function
EPPV6 - Proportional pressure reducing valve

2 Seal material
Blank - NBR Buna

3 Manual override option
M- with manual override

4 Control pressure
20 - 20 bar (290 psi)
32- 32 bar (460 psi)

5 Port size

Code	Port size
0	Cartridge only

6 Voltage rating
12 - 12V
24 - 24V

7 Voltage type
D - DC

8 Connector type
Y - AMP Jr Power Timer

9 Special features
00 - None

Cartridge only

Dimensions (mm)

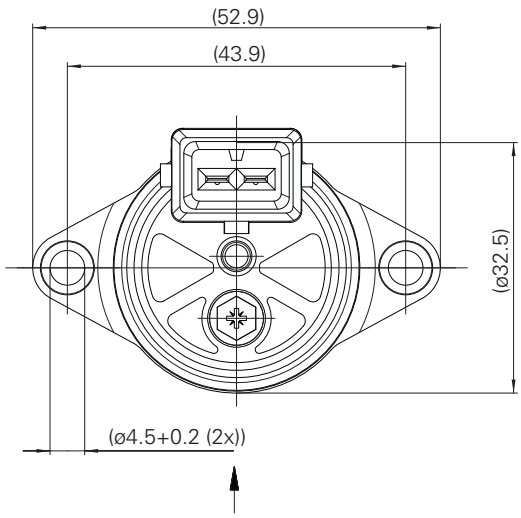

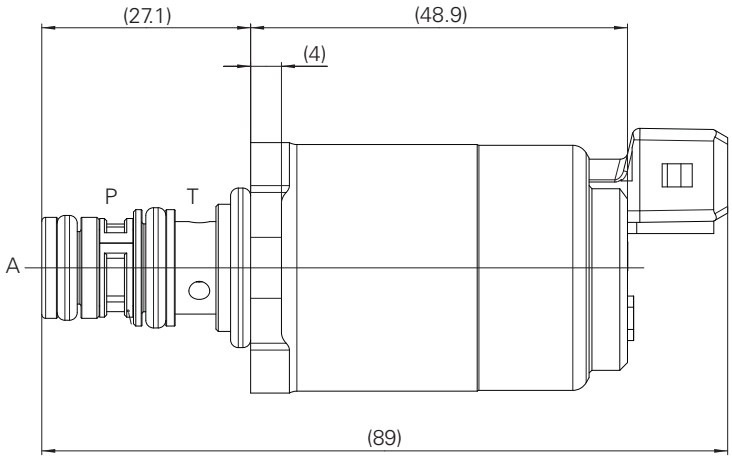

Where measurements are critical request certified drawings. We reserve the right to change specifications without notice.

EPRV1-10 - Proportional valve

Proportional reducing/relief, spool
7.6 L/min (2 USgpm) • 35 bar (500 psi)

Description

The EPRV1-10 is an electric, proportionally controlled, internally pilot operated, spool type, screw-in relief valve.

Operation

This valve remains open from port 2 to port 1 (port 3 must be vented). Once the predete mined pressure\is reached at port 1, the spool shifts to restrict the inlet flow at port 2, which regulates the pressure at port 1.

If the pressure at port 1 exceeds the setting of the valve, the spool will shift farther and relieve to port 3.

Functional symbol

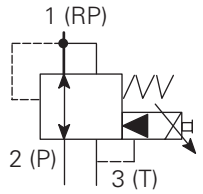

Sectional view

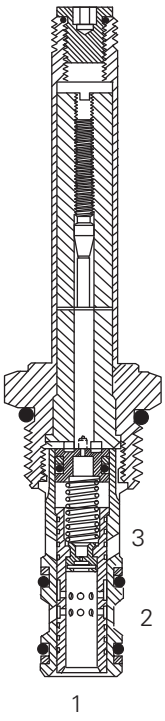

Ratings and specifications

Performance data is typical with fluid at 21,8 cSt (105 SUS) and 49°C (120°F)	
Typical application pressure (all ports)	3,5 - 35 bar (50 - 500 psi)
Cartridge fatigue pressure (infinite life)	35 bar (500 psi)
Rated flow	0 - 7,6 L/min (0 - 2.0 USgpm)
Cavity	C-10-3
Standard housing materials	Aluminum
Temperature range	-40° to 120°C (-40° to 248°F)
Fluids	All general purpose hydraulic fluids such as: MIL-H-5606, SAE 10, SAE 20, etc.
Filtration	Cleanliness code 18/**16/13**
Weight cartridge and coil	0,44 kg (0.98 lbs)
Seal kits	565804 (Buna-N) 889599 (Viton®) Viton is a registered trademark of E.I. DuPont

Pressure override characteristics

Pressure override, energized

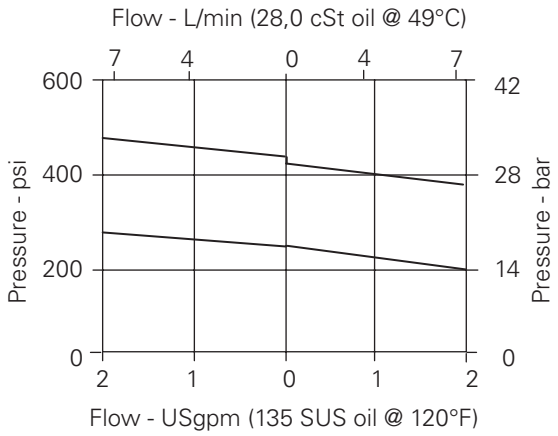

Pressure override, de-energized

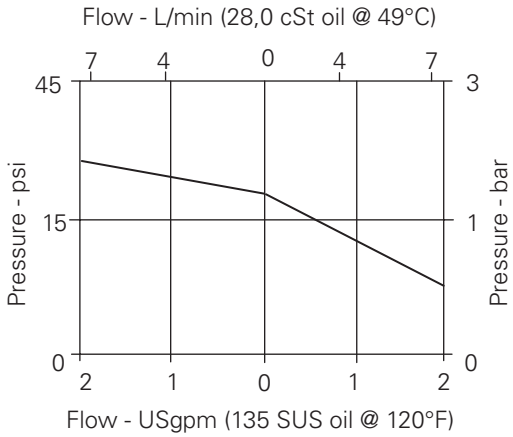

Where measurements are critical request certified drawings. We reserve the right to change specifications without notice.

EPRV1-10 - Proportional valve

Proportional reducing/relief, spool
7.6 L/min (2 USgpm) • 35 bar (500 psi)

Model code

EPRV1 – 10 (V) – (A) – ** – * – * – 00**

1 2 3 4 5 6 7 8

1 Function

EPRV1 - Proportional reducing/relieving valve

2 Size

10 - 10 size

3 Seal material

Blank - Buna-N
V - Viton®

4 Maximum pressure (factory set)

Customer to specify settings in increments of 7 bar (100 psi) and coded in hundreds of psi within the 14-35 bar range (200-500 psi) range.

Example: **5** - 35,0 (500 psi)

5 Port size

0 - Cartridge only

Code	Port size	Housing number
3B	3/8" BSPP	02-173358*
6T	SAE 6	566162*
2G	1/4" BSPP	876702
3G	3/8" BSPP	876714
6H	SAE 6	876704
8H	SAE 8	876711

*Light duty housing.
See section J for housings.

6 Voltage rating

00 - No coil
12D - 12VDC
24D - 24VDC
12B - 12VDC/w diode*
24B - 24VDC/w diode*

*Optional arc suppression diode.
Note: This valve uses the standard J series coils, see section C for coil part numbers and specifications.

7 Connector types

Blank - No coil
G - DIN 43650
Q - Spade Terminals
W - Leadwire
N - Deutch
Y - Amp JR

8 Special features

00 - None

(Only required if valve has special features, omitted if "00.")

⚠ Warning

Maintain 5-8 Nm(4-6 ft lbs) maximum torque on valve tube nut.Over tightening may cause valve failure.

Dimensions

mm (inch)

Torque cartridge in aluminum housing 47-54 Nm (35-40 ft. lbs)

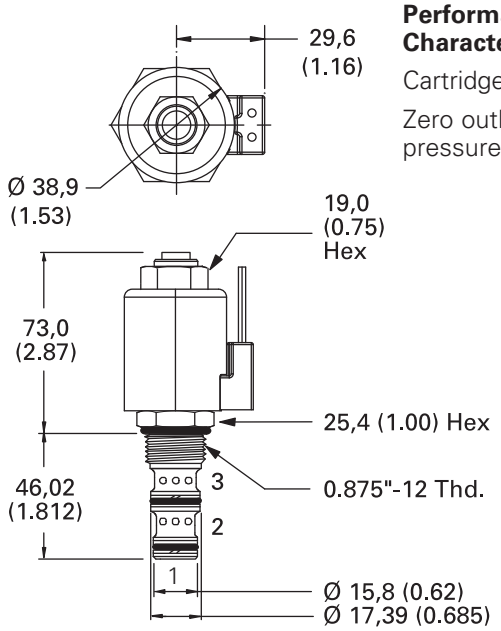

Valve is shown with "W" coil.

Performance Characteristics

Cartridges only

Zero outlet pressure

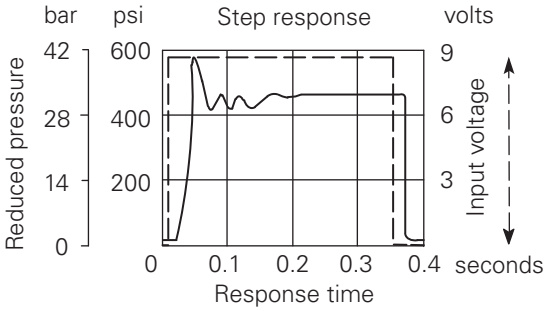

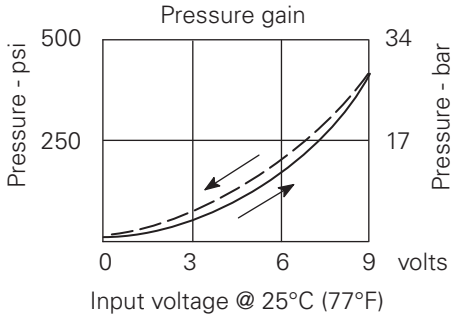

Where measurements are critical request certified drawings. We reserve the right to change specifications without notice.

EPRV3-10- Proportional valve

Proportional reducing/relief, spool
30 L/min (8 USgpm) • 207 bar (3000 psi)

Description

The EPRV3-10 is an electric, proportionally controlled, internally pilot operated, spool type, screw-in relief valve.

Operation

This valve remains open from port 2 to port 1 (port 3 must be vented). Once the predetermined pressure is reached at port 1, the spool shifts to restrict the inlet flow at port 2, which regulates the pressure at port 1.

If the pressure at port 1 exceeds the setting the valve, the spool will shift farther and relieve to port 3.

Functional symbol

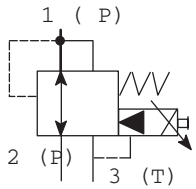

Sectional view

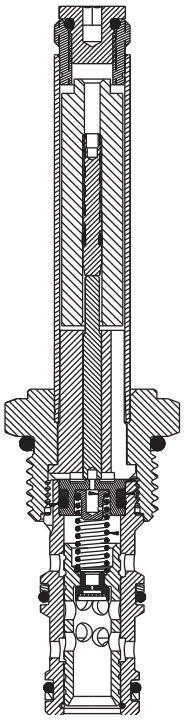

Ratings and specifications

Performance data is typical with fluid at 21,8 cSt (105 SUS) and 49°C (120°F)	
Typical application pressure (all ports)	3,5 - 207 bar (50 - 3000 psi)
Maximum Inlet Pressure	240 bar (3500 psi)
Cartridge fatigue pressure (infinite life)	207 bar (3000 psi)
Rated flow	30 L/min (8 USgpm)
Cavity	C-10-3
Standard housing materials	Aluminum
Temperature range	-40° to 120°C (-40° to 248°F)
Fluids	All general purpose hydraulic fluids such as: MIL-H-5606, SAE 10, SAE 20, etc.
Filtration	Cleanliness code 18/**16/13**
Weight cartridge and coil	0,44 kg (0.98 lbs)
Seal kits	565804 (Buna-N) 889599 (Viton®) Viton is a registered trademark of E.I. DuPont

Pressure override characteristics

Pressure override, energized

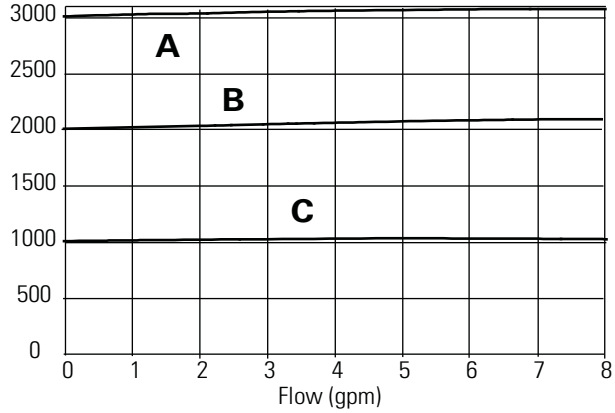

A – EPRV3-10X-30-0-00
B – EPRV3-10X-20-0-00
C – EPRV3-10X-10-0-00

Pressure override, de-energized

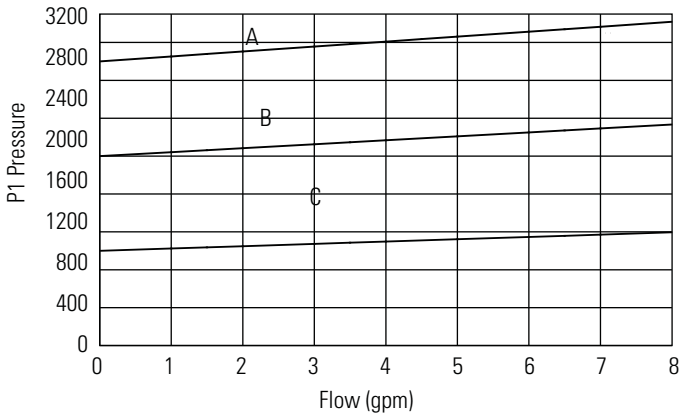

A – EPRV3-10X-30-0-00
B – EPRV3-10X-20-0-00
C – EPRV3-10X-10-0-00

Where measurements are critical request certified drawings. We reserve the right to change specifications without notice.

EPRV3-10- Proportional valve

Proportional reducing/relief, spool
30 L/min (8 USgpm) • 207 bar (3000 psi)

Model code

EPRV3 – 10 (V) – ** – ** – * * – 00**

1 2 3 4 5 6 7 8

1 Function

EPRV3 - Proportional reducing/relieving valve

2 Size

10 - 10 size

3 Seals

Blank - Buna-N
V - Viton®

⚠ Warning

Maintain 5-8 Nm (4-6 ft. lbs) maximum torque on valve tube nut. Over tightening may cause valve failure.

4 Maximum pressure (factory set)

Customer to specify settings in increments of 7 bar (100 psi) and coded in hundreds of psi within the 35-207 bar range (500-3000 psi) range.

Example: **5** - 35,0 (500 psi)

6 Voltage rating

00 - No coil
012D - 12VDC
024D - 24VDC
012B - 12VDC/w diode*
024B - 24VDC/w diode*

*Optional arc suppression diode.
Note: This valve uses the standard J series coils, see section C for coil part numbers and specifications.

5 Port size

0 - Cartridge only

Code	Port size	Housing number
A3B	3/8" BSPP	02-173358*
A6T	SAE 6	566162*
A2G	1/4" BSPP	876702
A3G	3/8" BSPP	876714
A6H	SAE 6	876704
A8H	SAE 8	876711

*Light duty housing.
See section J for housings.

7 Connector types

Blank - No coil
G - DIN 43650
Q - Spade Terminals
W - Leadwire
N - Deutch
Y - Amp JR

8 Coil series

Blank - No coil
J - J series coil

9 Coil special features

00 - None

(Only required when valve has special features, omitted if "00.")

Dimensions

mm (inch)

Torque cartridge in aluminum housing 47-54 Nm (35-40 ft. lbs).

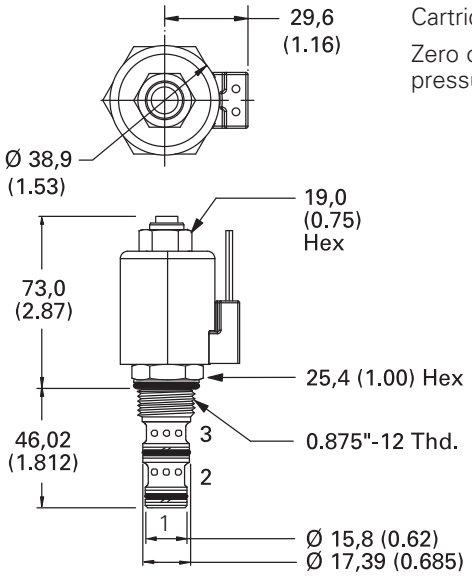

Valve is shown with "W" coil.

Performance Characteristics

Cartridges only

Zero outlet pressure

Pressure vs. Current

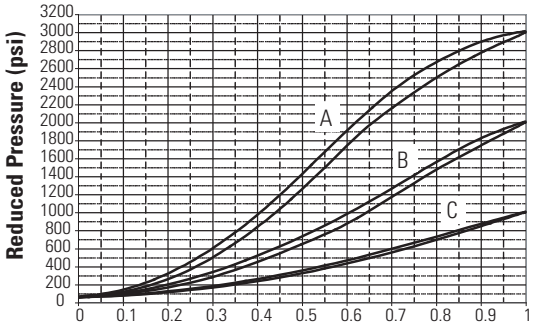

A – EPRV3-10X-30-0-00
B – EPRV3-10X-20-0-00
C – EPRV3-10X-10-0-00

Step Response Curve

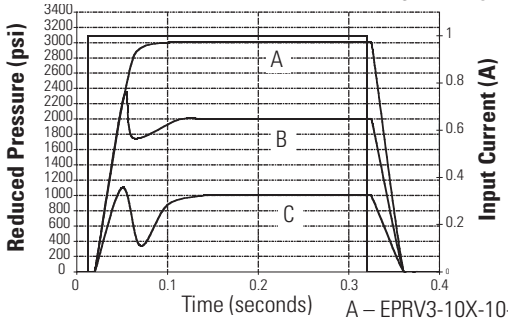

A – EPRV3-10X-10-0-00
B – EPRV3-10X-20-0-00
C – EPRV3-10X-30-0-00

Where measurements are critical request certified drawings. We reserve the right to change specifications without notice.

EPRV1-16 - Proportional valve

Proportional reducing/relief, spool
38 L/min (10 USgpm) • 35 bar (500 psi)

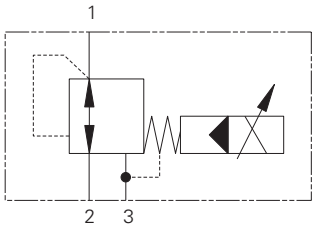

Operation

This valve remains open from port 2 to port 1 (port 3 must be vented). Once the predetermined pressure is reached at port 1, the spool shifts to restrict the inlet flow at port 2, which regulates the pressure at port 1.

If the pressure at port 1 exceeds the setting of the valve, the spool will shift farther and relieve to port 3.

Features

Hardened and ground components for accurate consistent control and a long life. IP69K Tough coil compatibility continuously rated.

B

Sectional view

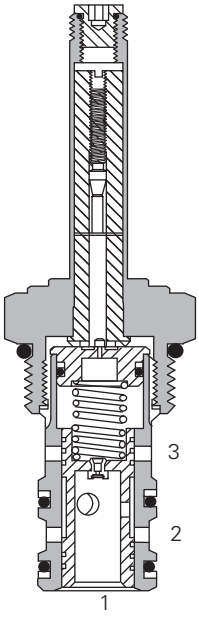

Performance data

Ratings and specifications

Performance data is typical with fluid at 21,8 cST (105 SUS) and 49°C (120°F)	
Typical application pressure (all ports)	3,5-35 bar (0-500 psi)
Cartridge fatigue pressure (infinite life)	35 bar (500 psi)
Rated flow	0-38,0 L/min (0-10 USgpm)
Temperature range	-40° to 120°C (-40° to 248°F)
Cavity	C-16-3
Fluids	All general purpose hydraulic fluids such as: MIL-H-5606, SAE 10, SAE 20 etc.
Filtration	Cleanliness code 18/16/13
Housing material (standard)	Aluminum
Weight including coil	0,9 kg (2.00 lbs)
Seal kit	565811 (Buna-N), 889599 (Viton®)

Viton is a registered trademark of E.I. DuPont.

Pressure drop curves

Pressure override, energized

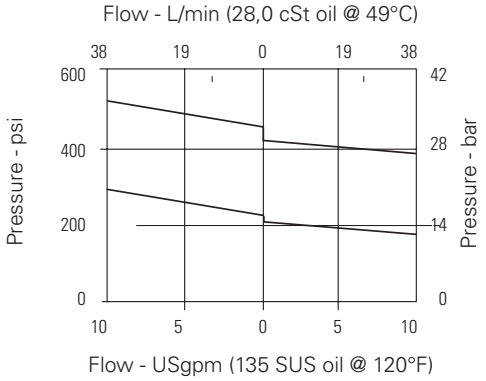

Pressure override, de-energized

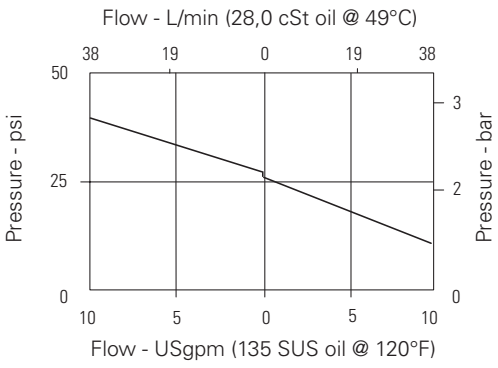

Description

This is a low pressure proportional pilot operated pressure reducing valve with a reverse relief screw in cartridge valve. It is ideal for the control of compensators on a pump or brake and clutch systems on a transmission circuit.

Performance curves

Zero outlet pressure

Cartridges only

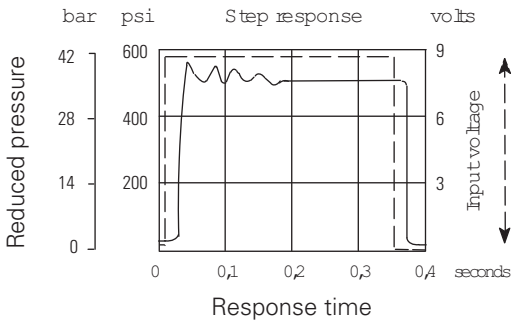

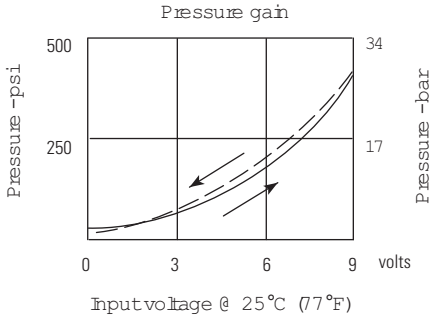

Where measurements are critical request certified drawings. We reserve the right to change specifications without notice.

EPRV1-16 - Proportional valve

Proportional reducing/relief, spool
38 L/min (10 USgpm) • 35 bar (500 psi)

Model code

EPRV1 – 16 (V) – ** – * – *** – * – 00**

1 2 3 4 5 6 7 8

1 Function

EPRV1 - Proportional reducing/relieving valve

2 Size

16 - 16 size

3 Seal material

Blank - Buna-N
V - Viton®

4 Maximum pressure

Customer to specify settings in increments of 7 bar (100 psi) and coded in hundreds of psi within the 14-35 bar range (200-500 psi) range.

Example: 5-35,0 (500 psi)

5 Port size

Code	Port size	Housing number
		Aluminum single
0	Cartridge only	
6B	3/4" BSPP	02-175465*
12T	SAE 12	566162*
6G	3/4" BSPP	876722
10H	SAE 10	876721
12H	SAE 12	876723

*Light duty housing.
See section J for housing details.

6 Voltage rating

00 - No coil
12D - 12VDC
24D - 24VDC
36D - 36VDC
12B - 12VDC/w diode*
24B - 24VDC/w diode*

*Optional arc suppression diode.

7 Connector types

Blank - No coil
G - DIN 43650
Q - Spade Terminals
W - Flying Lead
N - Deutsch
Y - Amp JR

For coil part numbers and dimensions see section C.

8 Special features

00 - None

Only required if valve has special features, omitted if "00."

Dimensions
mm (inch)

Torque cartridge in aluminum housing 108-122 Nm (80-90 ft lbs).

Cartridge only

Valve is shown with "W" coil.

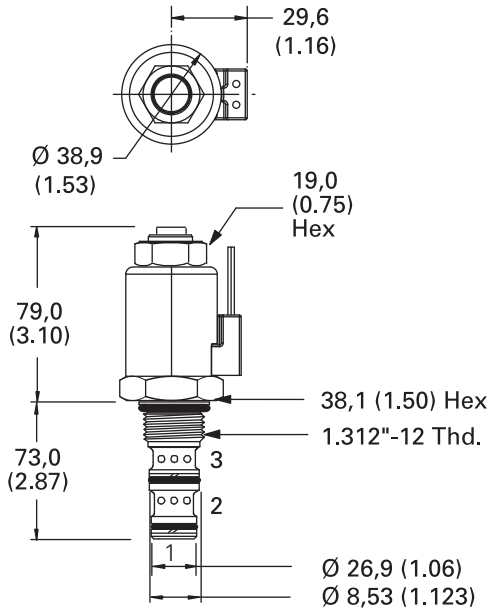

Installation drawing

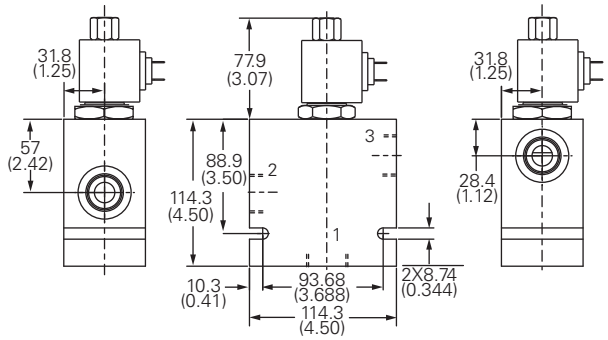

⚠ Warning

Maintain 5-8 Nm (4-6 ft lbs) maximum torque on valve tube nut. Over tightening may cause valve failure.



Where measurements are critical request certified drawings. We reserve the right to change specifications without notice.

Coils and electronic controls

Solenoid valve and Proportional valve coils and electronic controls for proportional valves



Powering Business Worldwide

Coils and electronic controls

TOUGHCOILS™ C-5
S AND P SERIES COILS C-9
J SERIES COILS C-10
H SERIES COILS C-11
LARGE TOUGH COILS C-12
L SERIES LARGE TOUGHCOILS C-14
R SERIES LARGE TOUGHCOILS C-15
LEGACY R & L SERIES COILS C-16
C13 AND C16 SERIES -COIL INFORMATION C-17
C13 AND C16 SERIES - SOLENOID COIL C-18
EPV SERIES PROPORTIONAL VALVE COILS EPV COILS C-19
EFV SERIES PROPORTIONAL VALVE COILS EFV C-20
ELECTRONIC CONTROLS C-21
MODEL CODE/OPERATING DATA C-22
INSTALLATION DATA C-23
ELECTRONIC CONTROLS C-27
MODEL CODE/OPERATING DATA C-28
INSTALLATION DATA C-29

ToughCoils™

Information

ToughCoils™

Eaton/IH ToughCoils™ have been designed to provide industry leading environmental protection and solenoid performance in a compact and rugged package. ToughCoils™ with integrated connectors are rated up to IP69K environmental protection. ToughCoils™ are available with a variety of popular integrated connection options and with wire leads.

The best in class, one-piece, shell encapsulated, design meets the most stringent environmental requirements for mobile and industrial applications.

The exclusive compact coil design from Eaton/IH, offers the advantage of field retrofitability on all existing, and new, applications.

ToughCoils™ features

IP69K Environmental Protection - This rating provides protection against the ingress of dust and high pressure jet stream. The IP69K test was designed specifically for rating protection against a high-pressure jet stream, high liquid temperature and close nozzle distance from the enclosure surface. IP69K protection is standard on coils with MetriPac or Deutsch, integrated connectors.

"Thermal shock dunk" Test - Eaton/IH ToughCoils have been qualified to withstand the toughest Mobile Equipment "Thermal Shock Dunk" tests. Integrated Deutsch, MetriPack[1] and Leadwire[2] connectors exceed "Thermal Shock Dunk" test qualifications at 140°C. The "Thermal Shock Dunk" test requires coils to be heated, reaching a stabilized temperature of 100°C, then immediately immersed in a solution at 0°C. The thermal shock is repeated five times with the coil monitored for dielectric strength in the solution and functional performance is verified.

In addition, ToughCoils™ passed a more severe powered dunk test conducted from 100° C to 0° C with 115% rated voltage applied.

[1]MetriPack® 150 and MetriPack® 280 are registered trade marks of Delphi Packard Electric Systems

[2]Coils with integrated connectors are recommended for applications in harsh environments.

Field retrofitable - ToughCoils™ replace all current Eaton coils used on D Frame and Shell type coils. Compact coil dimensions allow substitution in all existing applications. ToughCoils are available for most 8, 10, 12, 16 and 20 series valves. No additional water/weather proofing is required.

Steel Shell encapsulated design - ToughCoils™ provide protection against physical and environmental damage.

Eaton/IH ToughCoils™, with rated connector, meet or exceed all major OEM environmental protection requirements



Shown with deutsch connection options

Where measurements are critical request certified drawings. We reserve the right to change specifications without notice.

Model code

MCSC – * – * – * – ** – * – ** – 10**

1 2 3 4 5 6 7 8

1 Function
MCSC - Solenoid coil

2 Series
S - Size 8 (210 Bar)
P - Size 8 (350 Bar)
J - Size 10, 12, 16, 20 (210 Bar)
H - Size 10, 12, 16, 20 (350 Bar)

3 Voltage rating
012 - 12 volt
024 - 24 volt
036 - 36 volt
048 - 48 volt
115 - 115 volt
230 - 230 volt

4 Voltage type
D - DC
B - DC/with flyback diode
A - AC/with full bridge rectifier

5 Connector
G0 - ISO 4400 DIN 43650
Q0 - Spade Terminals
W0 - Flying lead
N0 - Deutsch Male, DT04-2P, Integrated (DC Only) Mating Connector: Deutsch DT06-2S
Y0 - Amp Jr (DC Only) Mating Connector: AMP 963040-3 or equivalent
D0 - MetriPack® 150 Male, Integrated (DC Only) Mating Connector: Delphi 12052641
J0 - MetriPack® 280 Male, Integrated (DC Only) Mating Connector: Delphi 15300027
E0 - Weather–Pack (Packard) female on wire leads Mating Connector: Delphi 12010973
F0 - Weather–Pack (Packard) male on wire leads Mating Connector: Delphi 12015792
Note: Auxillary parts formating connectors may be required.

6 Lead length
0 - None
A - 152mm [6.0 in] (Standard length with connector)
B - 610mm [24.0 in] (Standard length without connector)

7 Special features
00 - None
(Only required if valve has special features, omitted if "00.")

8 Design code
10 - Design code

Specifications

Ratings and specifications

Duty Rating	Continuous from 85% to 110% of nominal voltage
Operating temperature	100°C (212°F) continuous @ nominal voltage
Lead Wires	18 gauge, standard 610 mm (24") long, UL style 3173 CSA CL 1251 (meets SAE J1128 XLPE style SXL)
Power Rating	S Series: 20W P Series: 23W J Series: 23W H Series: 29W
Encapsulent	Glass filled nylon
Magnet Wire	U.L. class N, 200°C (392°F) NEMA pub. No. MW 1000, section MW 35 – C (single)
Flyback diode (arc suppressor)	Maximum recurrent peak reverse voltage – 800 V (optional)

Environmental protection

Connector	Ip65	Ip67	Ip69k	Thermal shock dunk
G0: DIN 43650	X*			
Q0: Spade				
Y0: Amp Jr.	X	X[1]*		
W0: Wire Leads	X	X		X[1]
N0: Deutsch	X	X	X	X
D0: Metri-Pack 150	X	X	X	X
J0: Metri-Pack 280	X	X	X	X

[1]Passed environmental testing, but not as robust as other connectors
*Rating dependent on mating connector

⚠ Caution
Coils may be hot to touch if used in continuous duty applications.

Where measurements are critical request certified drawings. We reserve the right to change specifications without notice.

ToughCoils

For 8 size solenoid valves
S & P series coils

S Series ToughCoils part numbers - 300AA00____ (Complete part number is 11 Digits)

Voltage	G0** Connector	Q0 Connector	W0 Connector	N0 Connector	Y0 Connector	D0 Connector	J0 Connector
12VDC	001A	009A	015A	021A	026A	031A	036A
24VDC	002A	010A	016A	022A	027A	032A	037A
36VDC	003A	011A	017A	023A	028A	033A	038A
24VAC	004A	012A	018A	–	–	–	–
115VAC	005A	–	–	–	–	–	–
230VAC	006A	–	–	–	–	–	–
12VDC*	007A	013A	019A	024A	029A	034A	039A
24VDC*	008A	014A	020A	025A	030A	035A	040A

*With flyback diode. (Voltage Type B)
**DIN 43560 mating connector for "G0" style coil – 02-166796.
For other voltages and connectors contact your Eaton representative.

Std. voltages	Amperes*
12 DC	1.67
24 DC	0.83
36 DC	0.56
24 AC	0.93
115 AC	0.19
230 AC	0.10

*Nominal voltage 25°C (77°F).

Voltage Type B

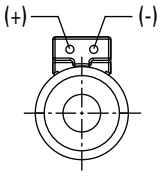

P Series ToughCoils part numbers - 300AA00____ (Complete part number is 11 Digits)

Voltage	G0** Connector	Q0 Connector	W0 Connector	N0 Connector	Y0 Connector	D0 Connector	J0 Connector
12VDC	041A	049A	055A	061A	066A	071A	076A
24VDC	042A	050A	056A	062A	067A	072A	077A
36VDC	043A	051A	057A	063A	068A	073A	078A
24VAC	044A	052A	058A	–	–	–	–
115VAC	045A	–	–	–	–	–	–
230VAC	046A	–	–	–	–	–	–
12VDC*	047A	053A	059A	064A	069A	074A	079A
24VDC*	048A	054A	060A	065A	070A	075A	080A

*With flyback diode. (Voltage Type B)
**DIN 43560 mating connector for "G0" style coil – 02-166796.
For other voltages and connectors contact your Eaton representative.

Std. voltages	Amperes*
12 DC	1.92
24 DC	0.96
36 DC	0.64
24 AC	1.06
115 AC	0.22
230 AC	0.11

*Nominal voltage 25°C (77°F).

Voltage Type B

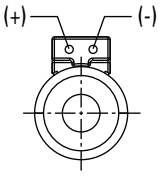

Where measurements are critical request certified drawings. We reserve the right to change specifications without notice.

300AA00____ (Complete part number is 11 Digits)

Voltage	G0** Connector	Q0 Connector	W0 Connector	N0 Connector	Y0 Connector	D0 Connector	J0 Connector
12VDC	081A	089A	095A	101A	106A	111A	116A
24VDC	082A	090A	096A	102A	107A	112A	117A
36VDC	083A	091A	097A	103A	108A	113A	118A
24VAC	084A	092A	098A	–	–	–	–
115VAC	085A	–	–	–	–	–	–
230VAC	086A	–	–	–	–	–	–
12VDC*	087A	093A	099A	104A	109A	114A	119A
24VDC*	088A	094A	100A	105A	110A	115A	120A

*With flyback diode. (Voltage Type B)
**DIN 43560 mating connector for "G0" style coil – 02-166796.
For other voltages and connectors contact your Eaton representative.

Std. voltages	Amperes*
12 DC	1.92
24 DC	0.96
36 DC	0.64
24 AC	1.06
115 AC	0.22
230 AC	0.11

Nominal voltage 25°C (77°F).

Voltage Type B

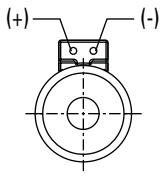

H Series ToughCoils part numbers - 300AA00____ (Complete part number is 11 Digits)

Voltage	G0** Connector	Q0 Connector	W0 Connector	N0 Connector	Y0 Connector	D0 Connector	J0 Connector
12VDC	121A	129A	135A	141A	146A	151A	156A
24VDC	122A	130A	136A	142A	147A	152A	157A
36VDC	123A	131A	137A	143A	148A	153A	158A
24VAC	124A	132A	138A	–	–	–	–
115VAC	125A	–	–	–	–	–	–
230VAC	126A	–	–	–	–	–	–
12VDC*	127A	133A	139A	144A	149A	154A	159A
24VDC*	128A	134A	140A	145A	150A	155A	160A

*With flyback diode. (Voltage Type B)
**DIN 43560 mating connector for "G0" style coil – 02-166796.
For other voltages and connectors contact your Eaton representative.

Std. voltages	Amperes*
12 DC	2.42
24 DC	1.21
36 DC	0.81
24 AC	1.34
115 AC	0.28
230 AC	0.14

*Nominal voltage 25°C (77°F).

Voltage Type B

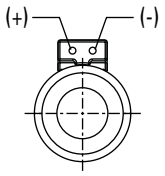

Where measurements are critical request certified drawings. We reserve the right to change specifications without notice.

S and P Series coils

Dimensions

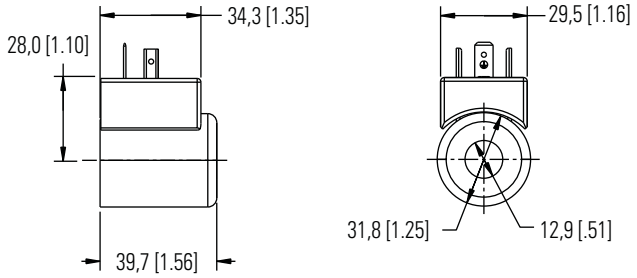

G0
DIN 43650-A Connector



Shown with integrated Deutsch Connector

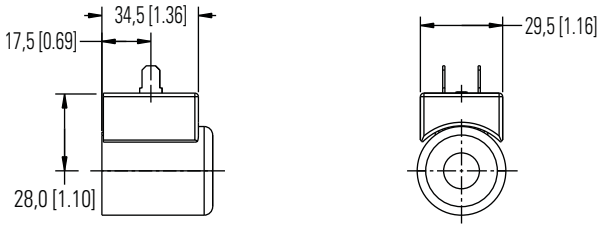

Q0
Spade connector

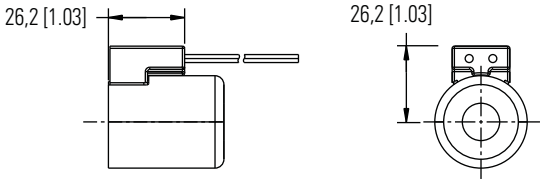

W0
Leadwire

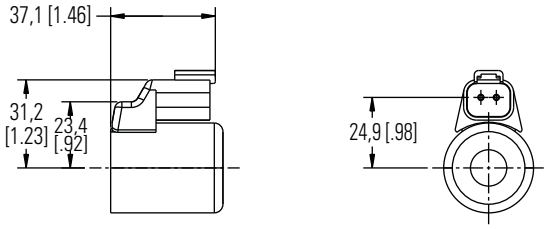

N0
Deutsch Male DTO4-2P integrated connector

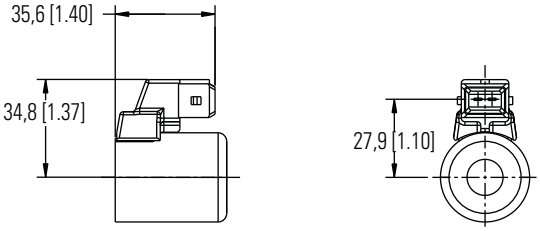

Y0
AMP Junior timer integrated connector

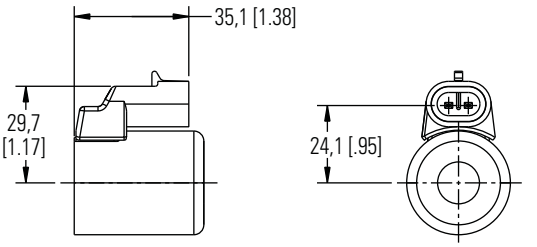

D0
Metri-Pack 150 Male, integrated connector

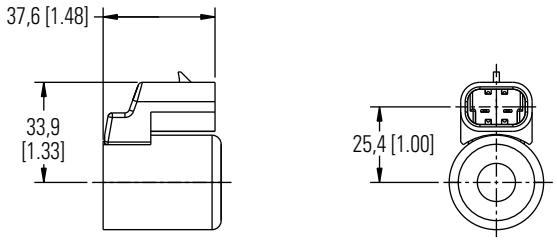

J0
Metri-Pack 280 Male, integrated connector

Where measurements are critical request certified drawings. We reserve the right to change specifications without notice.

Dimensions

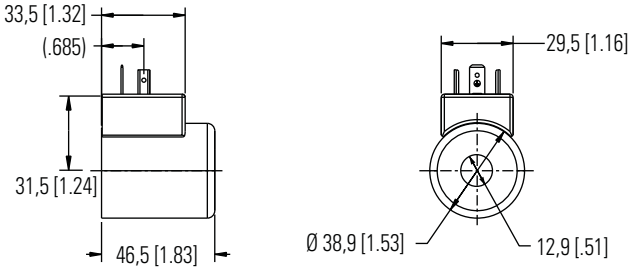

G0
DIN 43650-A Connector



Shown with integrated MetriPack 150 Connector

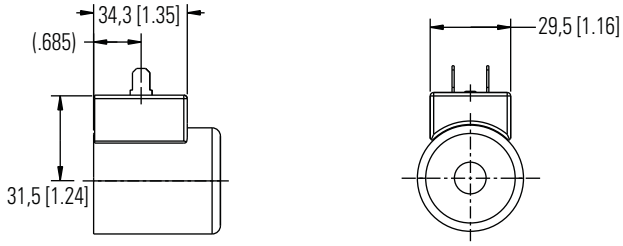

Q0
Spade connector

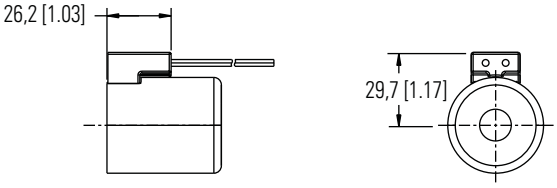

W0
Leadwire

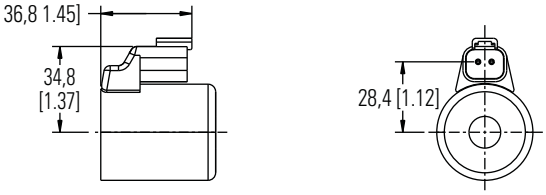

N0
Deutsch male DTO4-2P integrated connector

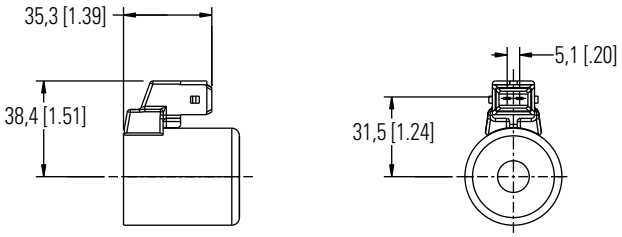

Y0
AMP Junior timer integrated connector

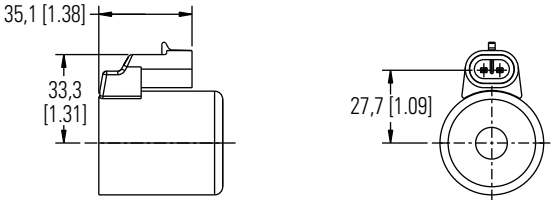

D0
Metri-Pack 150 Male, integrated connector

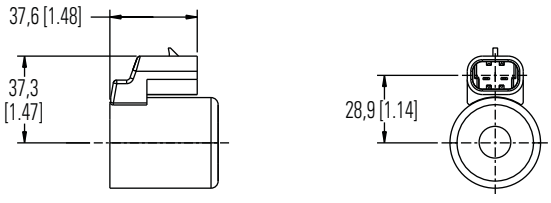

J0
Metri-Pack 280 Male, integrated connector

Where measurements are critical request certified drawings. We reserve the right to change specifications without notice.

H Series coils

Dimensions

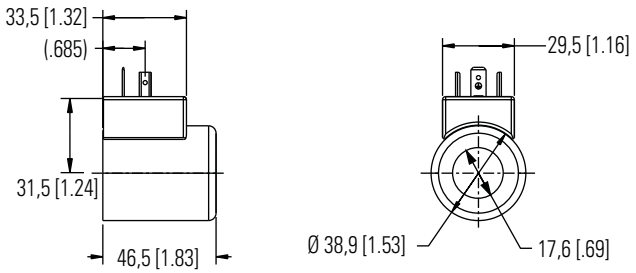

G0
DIN 43650-A Connector



Shown with integrated MetriPack 280 Connector

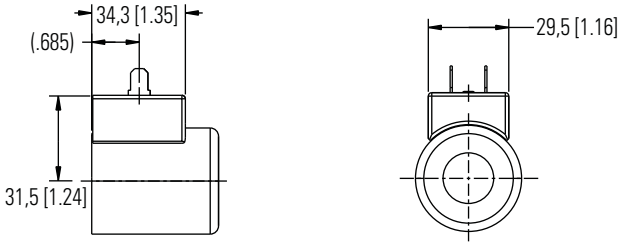

Q0
Spade connector

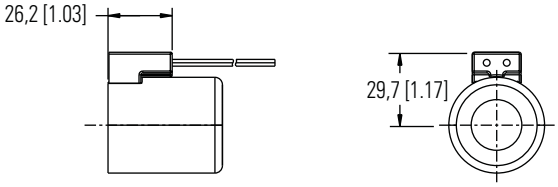

W0
Leadwire

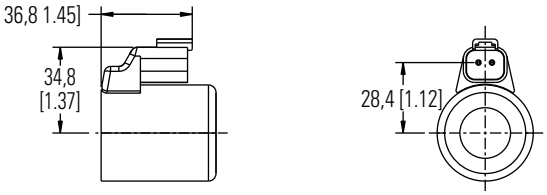

N0
Deutsch male DTO4-2P integrated connector

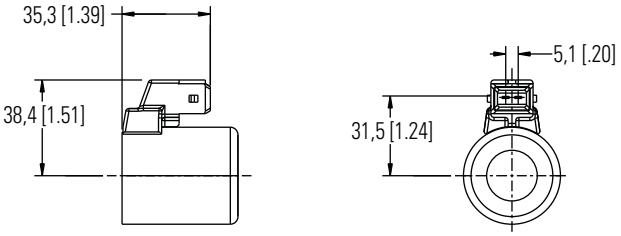

Y0
AMP Junior timer integrated connector

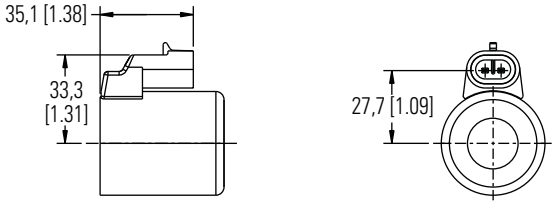

D0
Metri-Pack 150 Male, integrated connector

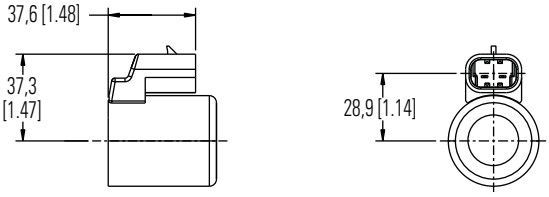

J0
Metri-Pack 280 Male, integrated connector

Where measurements are critical request certified drawings. We reserve the right to change specifications without notice.

Model code

LTC	–	2	–	**	–	*	–	***	–	K	–	N0	–	0	–	00	–	10
1		2		3		4		5		6		7		8		9		10

1 Function
LTC - Solenoid coil

2 Control type
2 - Voltage Control (on/off)

3 Power rating
AA - 30W (standard for R series)
AG - 28W (standard for L series)

4 Series
L - 10 size for ESV9 and SV9A valves (17.6mm inner diameter)
R - 10 and 12 size used on SV*M solenoid valves (23.6mm inner diameter)

5 Voltage rating
012 - 12 volt
024 - 24 volt

6 Voltage type protection
K - DC with no protection
G - AC w/ full bridge rectifier
M - DC w/ bi-directional Diode

7 Connector type
N0 - Deutsch male, DT04-2P, integrated
W0 - Flying lead
Y0 - Amp Jr (DC Only) Mating Connector: AMP 963040-3 or equivalent

8 Lead length
0 - None
C - 152mm [6.0 in] (Standard length with connector)
J - 622mm [24.5 in] (Standard length without connector)

9 Spcecial features
00 - None

10 Design code
10 - Design code

Specifications

Ratings and Specifications

Duty Rating	Continuous from 85% to 110% of nominal voltage
Operating temperature	100°C (212°F) continuous @ nominal voltage
Power Rating	L Series: 28W R Series: 30W
Encapsulent	Glass filled nylon
Magnet Wire	U.L. class N, 200°C (392°F) NEMA pub. No. MW 1000, section MW 35 – C (single)

Environmental protection

Connector	IP65	IP67	IP69K	Thermal shock dunk
Y0: Amp Jr.	X	X*		
W0: Wire Leads	X	X		X
N0: Deutsch	X	X	X	X

*Rating dependent on mating connector

⚠ Caution
Coils may be hot to touch if used in continuous duty applications.

Where measurements are critical request certified drawings. We reserve the right to change specifications without notice.

Large Tough Coils

L & R Series Coils

L Series ToughCoils part numbers - 309AA00____ (Complete part number is 11 Digits)

Voltage	Q0 Connector	W0 Connector	N0 Connector	Y0 Connector	D0 Connector	J0 Connector
12VDC	–	–	041A	–	–	–
24VDC	–	–	042A	–	–	–

For other voltages and connectors contact your Eaton representative.

Std. voltages	Amperes*
12 DC	2.35
24 DC	1.17

*Nominal voltage 25°C (77°F).

Voltage Type B

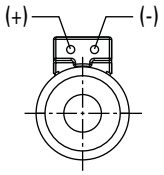

R Series ToughCoils part numbers - 309AA00____ (Complete part number is 11 Digits)

Voltage	Q0 Connector	W0 Connector	N0 Connector	Y0 Connector	D0 Connector	J0 Connector
12VDC	–	–	001A	006A	–	–
24VDC	–	–	017A	021A	–	–

For other voltages and connectors contact your Eaton representative.

Std. voltages	Amperes*
12 DC	2.50
24 DC	1.25

*Nominal voltage 25°C (77°F).

Voltage Type B

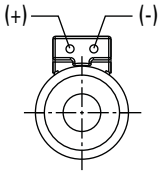

Where measurements are critical request certified drawings. We reserve the right to change specifications without notice.

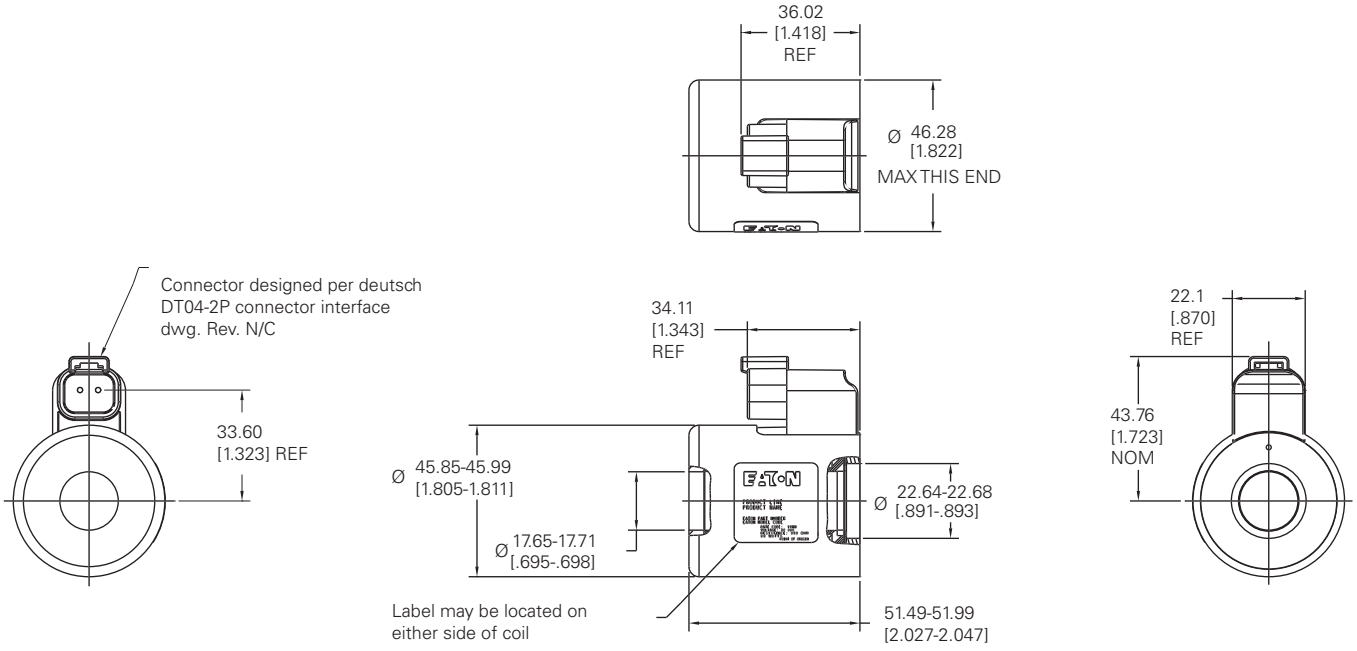

N0
Deutsch Male DTO4-2P integrated connector

Where measurements are critical request certified drawings. We reserve the right to change specifications without notice.

Dimensions

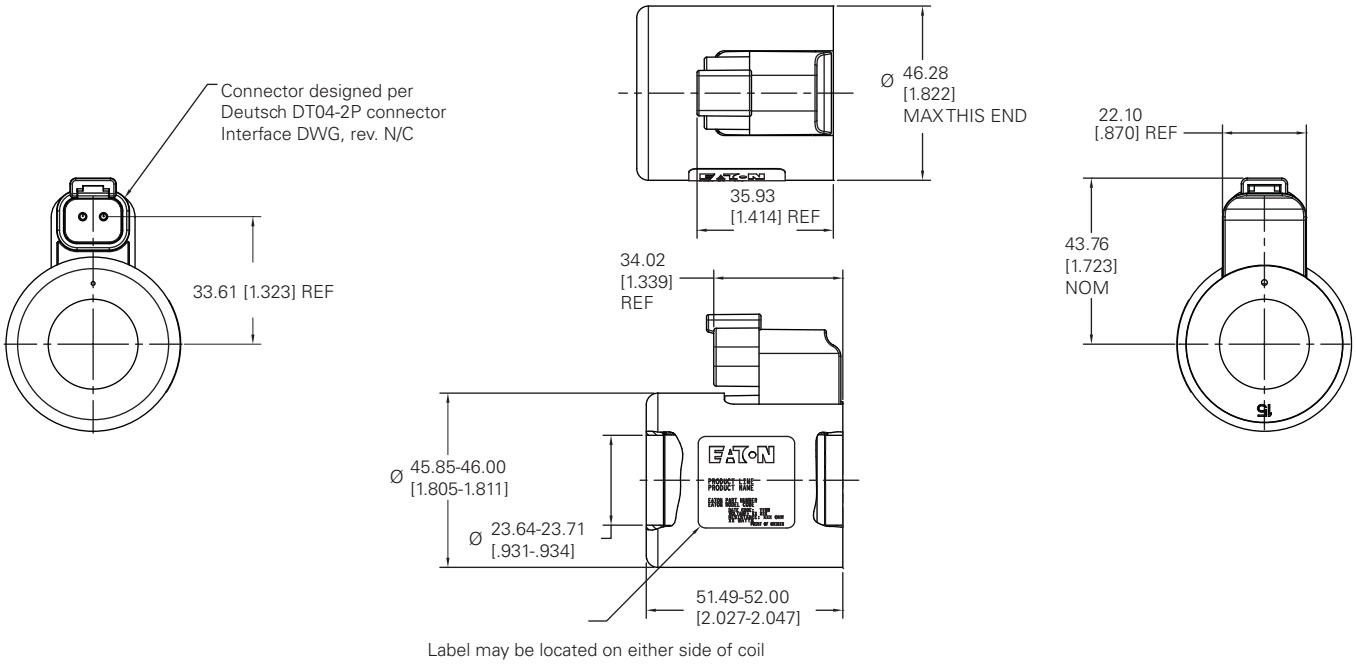

Label may be located on either side of coil

N0
Deutsch Male DTO4-2P integrated connector

Where measurements are critical request certified drawings. We reserve the right to change specifications without notice.

L series coils ("EN490" coils)

DC Coils — Connector

Voltage	"G" DIN 43650 connector	"W" Leadwires only
Full Power Coils:		
12V	02-309454	02-309452
24V	02-309455	02-309453

Note: For more information on "L" series coils, please refer to Eaton Technical datasheet 5049/EN/0596/A (Solenoid Operated Directional Valve-DG4V-35, EN490 for Mobile Equipment).

R series coils (Blue coils)

DC Coils — Connector

Voltage	"G" DIN 43650 connector	"Q" SpaDe connector	"W" Leadwires only
Full Power Coils:			
12V	507847	02-111166	02-140394
24V	507848	02-111168	02-140395

Note: For more information on "R" series coils, please refer to Eaton Technical datasheet V-VLDL-MC011-E (Solenoid Operated Directional Valve-DG4V-35 and DG4V3 Series).

R and L series coils

Power consumption	
DC solenoids at rated voltage and 20°C (68°F)	
Full Power Coils:	
12V	30W
24V	30W

Where measurements are critical request certified drawings. We reserve the right to change specifications without notice.

C13 and C16 Series - coil information

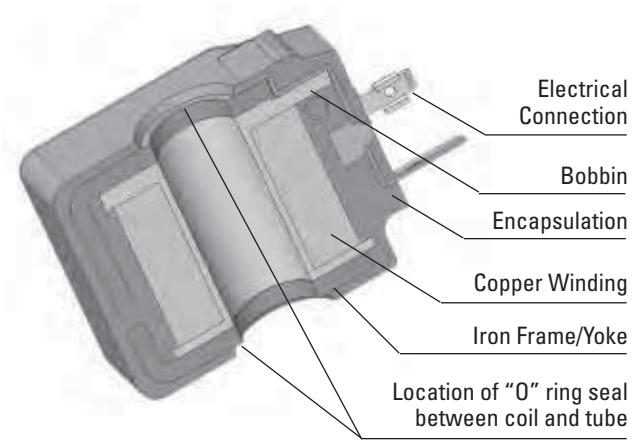

Wattage

C13 (for 13 mm tubes) = 14, 22 & 27 Watts
C16 (for 16 mm tubes) = 19 & 29 Watts

Voltages

Standard

12 VDC	110 VRAC
24 VDC	220 VRAC

Special/Optional
Other Voltages are available on request

Alternating current

For AC voltage an ISO4400 rectified connector must be used, as the coils are wound for DC. The correct connector is available from the factory:

110 VAC = AXP9997-115
220 VAC = AXP9997-230

VDR is fitted for over-voltage protection.
Diodes are rated at 1.5 amp.

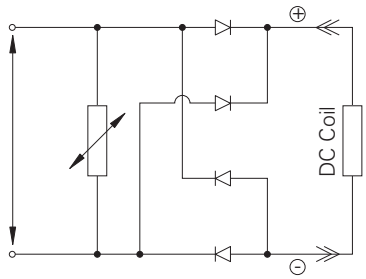

AC Voltage Connector Circuit Diagram

Duty rating

The coil is rated for continuous operation at nominal voltage +/- 10% and an ambient range of -20 to +40.

Note: Coil performance, force produced and power consumed, is affected by the heat of the coil, performance figures given in this catalogue are measured under simulated continuous duty conditions at the coil stabilized temperature. It is important to verify the actual conditions the valve will experience for any given application it should be tested in situ to confirm valve selection.

Wire insulation

The coil winding is copper magnet wire insulation equivalent to class N (200°C).

Encapsulation material

C13, 14 Watt coils and C16, 19 Watt coils are black in colour and made from PBT (Black Polybutylene Reinforced) equivalent to Class F (155°C)

C13, 22 & 27 Watt coils and C16, 29 Watt coils are black in colour and made from IXEF (Black Polyarylamide Reinforced) equivalent to Class H (180°C)

Ingress protection (IP) BS EN 60529

The coil/tube joint is sealed by "O" rings preventing fluid ingress and the possibility of tube corrosion.

Different electrical connectors offer different levels of protection the minimum being the DIN 43650 connector with a gasket at IP65. Integrated Hydraulics offer a wide range of connector types - details of which are available on request.

Connectors

H = ISO4400 Standard DIN43650
2 pin and earth

F = Black Flying Leads 1.5mm^2 wire
600 mm long, 15 AWG, 2.2 mm diameter, Teflon FEP covered
(DC voltage only)

DM = Deutsch Moulded 2 way DT04-2P series
(DC voltage only).

Caution

When handling coils after or during use they may be hot which can cause burning to the skin. Handle with care and use the appropriate equipment.

Where measurements are critical request certified drawings. We reserve the right to change specifications without notice.

Model code

C13 – H – 24 / 22

1 2 3 4

1 Coil Series

C13 - 13 mm tube

C16 - 16 mm tube

2 Connection

H - DIN43650 ISO Standard

F - Flying Leads
(12 and 24 VDC only)

DM - Deutsch Moulded
(12 and 24 VDC only)
(Consult factory for other options)

We reserve the right to change specifications without notice

3 Voltage

12	12 VDC
24	24 VDC
110	110 VRAC
220	220 VRAC*

*220 to 240 VAC

All AC coils must be used with a rectifying connector:
(AXP9997- 115 or AXP9997-230)
(Other voltages available on request)

4 Wattage

C13	C16
14 = 14 Watt	**19** = 19 Watt
22 = 22 Watt	**29** = 29 Watt
27 = 27 Watt	

C13 Coils

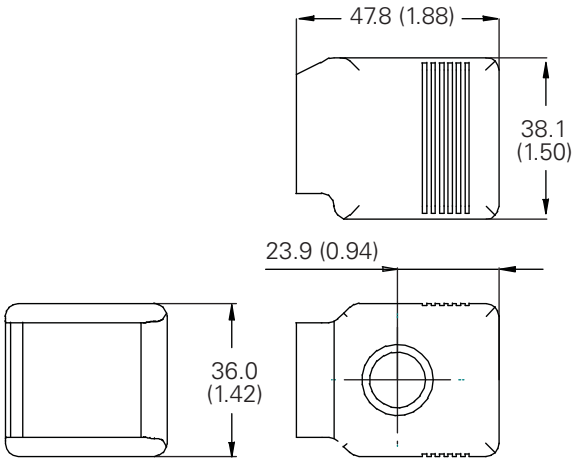

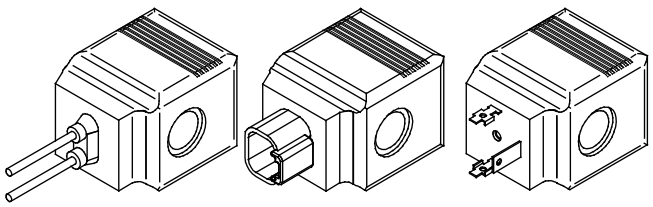

C16 Coils

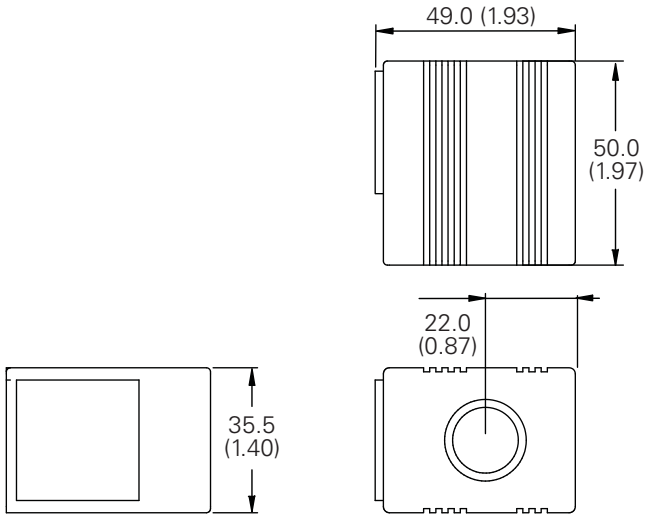

Where measurements are critical request certified drawings. We reserve the right to change specifications without notice.

C

EPV Series proportional valve coils
EPV coils

Control and specifications	
Rheostat	12 VDC operation 10-12 V, 20-25 watts 24 VDC operation 25-30 V, 20-25 watts
Power plug options	EHH-AMP-702, EPAD-SA-1A6-10 (Require 24 VDC power supply to power plug and 12 VDC coil)
Amplifier card	EEA-PAM-523 (Requires 24 VDC power supply and either 12VDC or 24 VDC coil)
Joystick suppliers	OEM Controls, Inc, Shelton, CT P-Q Controls, Inc, Bristol, CT

Std. voltages	Amperes*	Lead color	Power rating
12 DC	1.32	red	16 W
24 DC	.66	black	16 W

*Nominal voltage @ 25°C (77°F).

Coil part numbers

Voltage	F Connector	Q Connector	U* Connector	W Connector	Y Connector
12VDC	02-308810	02-317154	02-154070	02-154072	02-308808
24VDC	02-308811	02-317155	02-154071	02-154073	02-308809

*DIN 43650 mating connector for "U" style coil – 02-166796.

Coil configurations

⚠ Caution
Coils may be hot to touch if used in continuous duty applications.

"F"- Weather-Pack male on leads

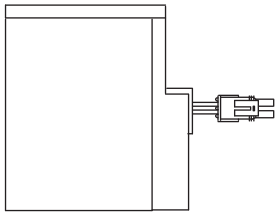

"Q" - Spade terminal

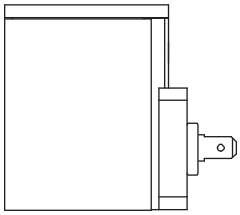

"U"– DIN 43650

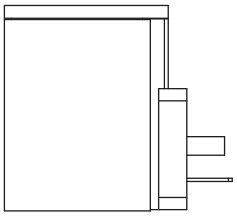

"W" 610 mm (24 inch) lead wire

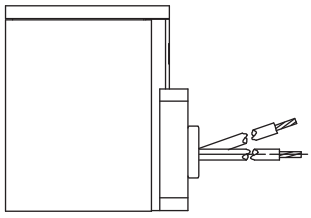

"Y"- Metri-Pack 150 male on leads

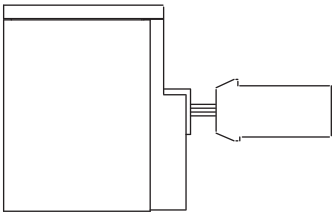

Note: Width – all configurations

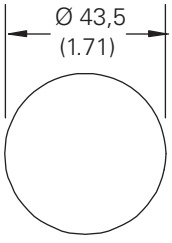

Where measurements are critical request certified drawings. We reserve the right to change specifications without notice.

Control and specifications

Power plug options	EHH-AMP-702 (Requires 24 VDC power supply to power plug and 12 VDC coil) EHH-AMP-712 (Requires 12 VDC power supply to power plug and 12 VDC coil)
DIN Rail Module	EHH-PAM-600 (Requires 24 VDC power supply and 12VDC)

⚠ Caution
Coils may be hot to touch if used in continuous duty applications.

Specifications

Standard Voltage	Resistance	Power
12 VDC	4.7 Ω	30 W
24 VDC	19.0 Ω	30 W

Coil model code

MCSC *** *** * ** ** ** **
1 2 3 4 5 6 7 8

1 Function
MCSC - Solenoid Coil

2 Series
M - Size 10 (210 Bar)

3 Voltage rating
012 - 12 volt
024 - 24 volt

4 Voltage type
D - DC

5 Connector
G0 - ISO 4400 DIN 43650
W0 - Flying lead
C0 - Deutsch Male, DT04-2P, On wire leads

Note: Auxiliary parts for mating connectors may be required.

DIN 43560 mating connector for "G" style coil – 02-166796.

6 Lead length
0 - None
A - 152mm [6.0 in] (standard length with connector)
B - 610mm [24.0 in] (standard length without connector)
K - 127mm [5.0 in]

Coil kits

Standard coil	Part numbers
Model code	**Assembly number**
MCSC012DGE00	6034440-001
MCSC024DGE00	6034440-002
MCSC012DWE00	6034441-001
MCSC012DCE06	6034442-002

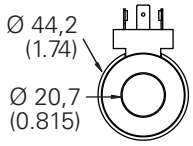

Note: Width all configurations

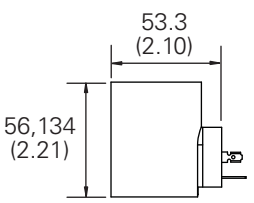

"G" - DIN 43650

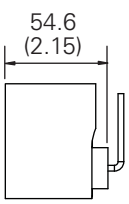

"W" - 610 mm (24 inch) lead wire

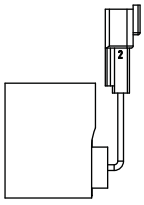

"C" - Deutsch DT0402P on leads

Where measurements are critical request certified drawings. We reserve the right to change specifications without notice.

Electronic controls

Proportional valve control power plugs

EHH-AMP-702-D/K-* Series

For use with valve types:

EPV-12D-1***

EFV1--012DE***

ERV1/2-12D-1***

EPRV1/3-12D-1***

ESV1-12D-1***

IRV-012D-1***

PFR21*

PFR24*

PDR21A*

PPD22-012D-1***

C

Application

Primary applications are in the control of non-feedback proportional valves where the cost of more sophisticated electronic controls can be avoided.

Type J is typically used in closed-loop applications.

General description

Three types of plugs, conforming to ISO 4400/DIN 43650 interface, with integral amplifiers and necessary adjustment potentiometers, are designed for use with non-feed back hydraulic valves.

This plug/valve combination offers very low cost solutions to many hydraulic control problems requiring proportional control.

Type D is controlled with a 0-10V command signal, and has adjustable gain, ramp, deadband compensation and dither.

For closed-loop and no ramp applications adjust the ramp port to minimum setting.

Type K is controlled with a 4-20 mA command signal, and has an adjustable ramp time of 50 ms to 5s.

Features and benefits

- Integral amplifier provides essential functions for control of proportional valves
- Adjustable ramp time (types D and K), gain, deadband compensation and dither
- Ease of installation, with reduced cost
- Fully short-circuit and reverse-polarity protected
- Differential voltage command signal (type D)
- Adjustable dither
- EMC to latest European standards
- Protection to IP67

Electrical block diagram

EHH-AMP-702-D/K-*

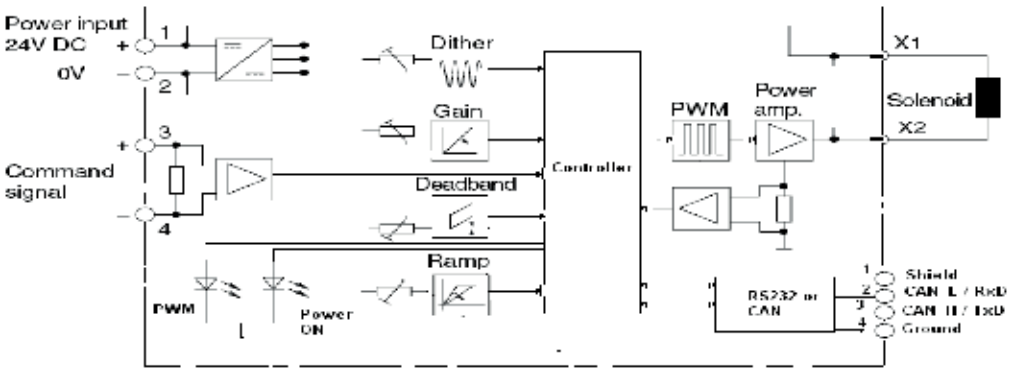

Note: This product has been designed and tested to meet specific standards outlined in the European Electro-magnetic Compatibility Directive (EMC) 89/336/EEC, amended by 91/26/EEC, 92/31/EEC and 93/68/EEC, article 5. For instructions on installation requirements to achieve effective protection levels, see this leaflet and the Installation Wiring Practices for Vickers Electronic Products leaflet 2468. Wiring practices relevant to this Directive are indicated by a warning symbol and Electromagnetic Compatibility (EMC).

Where measurements are critical request certified drawings. We reserve the right to change specifications without notice.

Model code

EHH - AMP - 702 - * - R - P - * - 30

1 **Adjustment range**

D - Proportional plug:
0-10 VDC with ramp

K - Proportional plug:
4-20 mA with ramp

2 **Cable gland**

1 - PG9
2 - M16

Operating data

Electrical

	Types D	Type K
Connections 1 2 3 4	 24V DC Supply GND Positive command signal Negative command signal	
Power (input) supply	18-36V DC including ± 10% maximum ripple (peak-to-peak) 24V DC nominal	
Absolute maximum voltage	40V	
Max. power consumption including solenoid	35W	
Reverse polarity protected	Yes	
Short circuit protected	Yes	
Maximum output current	1,6A	
Maximum output voltage typical (1,6A output current)	Typically 1,5V below supply voltage	
Command signal	0-10V (10 kohms)	4-20 mA (250 ohms)
Deadband triggering For output (LED on) For no output (LED off)	200 mV 200 mV to 10V 0 mV to 100 mV	4 mA 4-20 mA 0-4 mA
Deadband adjustment range	100 to 1000 mA	
Gain adjustment range	0.02A/V to 0.16A/V	0.01 A/mA to 0.08 A/mA
Dither adjustment range	0 to 500 mA	
Ramp time (types D and K only)	50 ms to 5s	
PWM frequency	1200 Hz ± 10%	
Dither frequency	120 Hz ± 10%	
Protection	IEC 529: IP67 (when correctly installed with interface seal in place) Fully short-circuit and reverse-polarity protected	
Isolation to VDE 0110	Group "B"	
Electromagnetic compatibility (EMC): Emission Immunity	 EN 50081-2 EN 50082-2	

Mechanical

Housing	PA6 glass-reinforced plastic (conforming to UL-94HB). Color: gray
Mounting interface	ISO 4400 (DIN 43650)
Cable clamp	Pg9 screw type
Cable diameter	Ø 5 to 10 mm (0.197 to 0.394" dia.)
Wire section	0,5 to 1,0 mm2 (20-17 AWG)
Temperature, ambient range	-20° to +70°C (-4° to +158°F)
Mass	0,07 kg (0.154 lb)

Where measurements are critical request certified drawings. We reserve the right to change specifications without notice.

Installation data

Input/output characteristics

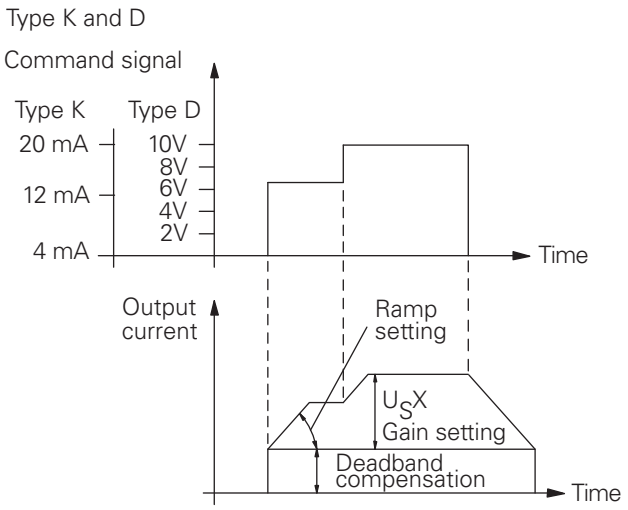

Installation dimensions

mm (inch)

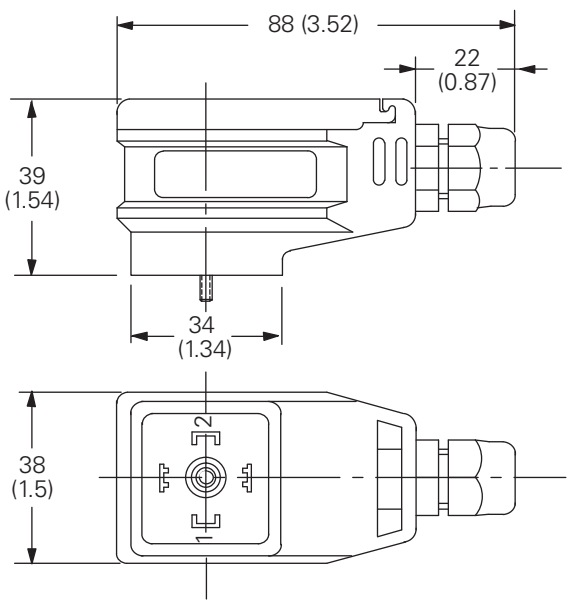



Solenoid Connections

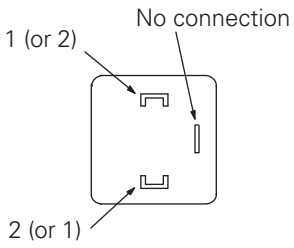

Where measurements are critical request certified drawings. We reserve the right to change specifications without notice.

Adjustments

Ramp time: Turn clockwise to increase ramp time (Only types D/K).

Gain: Turn clockwise to increase gain.

Deadband compensation: Turn clockwise to increase deadband compensation current.

Dither: Turn clockwise to increase the dither current.

Terminal 1: Power Supply 18-36V DC, positive.

Terminal 2: Power Supply 0V.

Terminal 3: Command signal positive (see "Operating Data").

Terminal 4: Command signal negative (see "Operating Data").

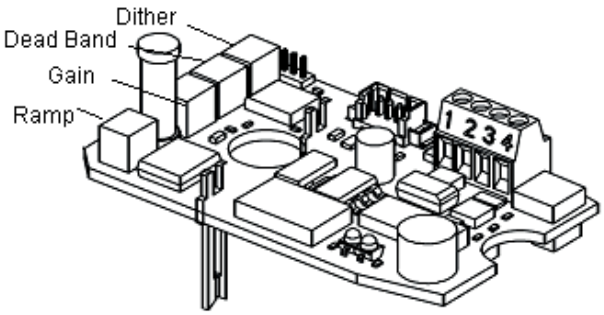

Installation wiring options

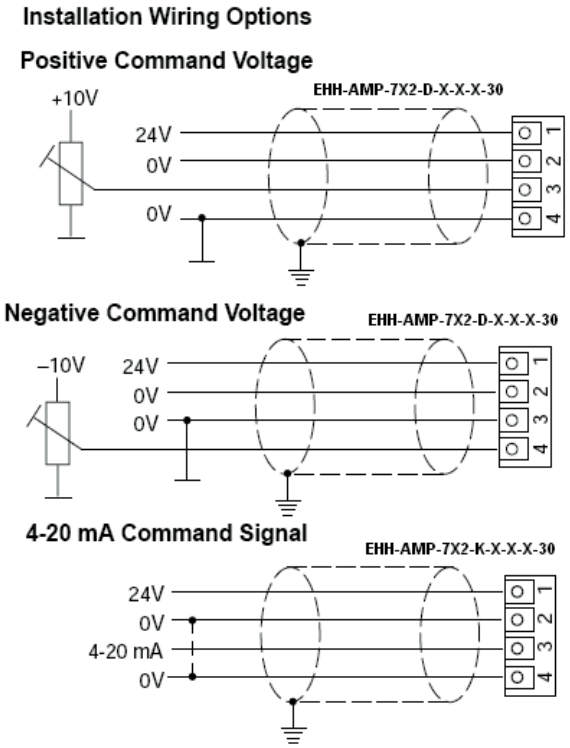

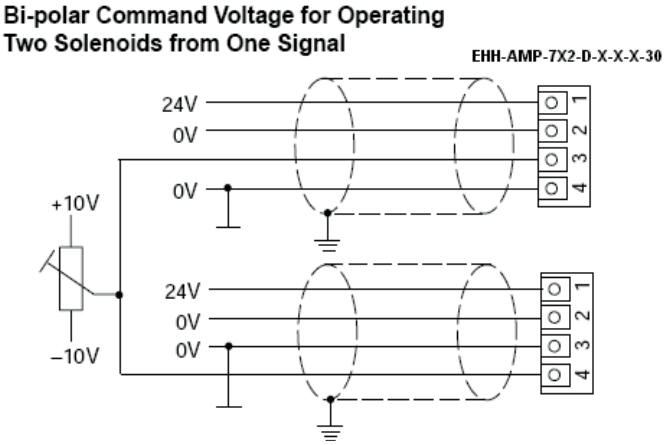

⚠ Warning

Electromagnetic Compatibility (EMC) - Screened cables should be used and particular attention paid to the grounding of the screens as shown in the above diagrams.

Where measurements are critical request certified drawings. We reserve the right to change specifications without notice.

Assembly showing wiring connection points

⚠ Warning

Ensure cable clamp nut is adequately tightened to secure cable. Do not connect, or disconnect, the plug while power is on. Do not mount, or dismount, the plug while power is on.

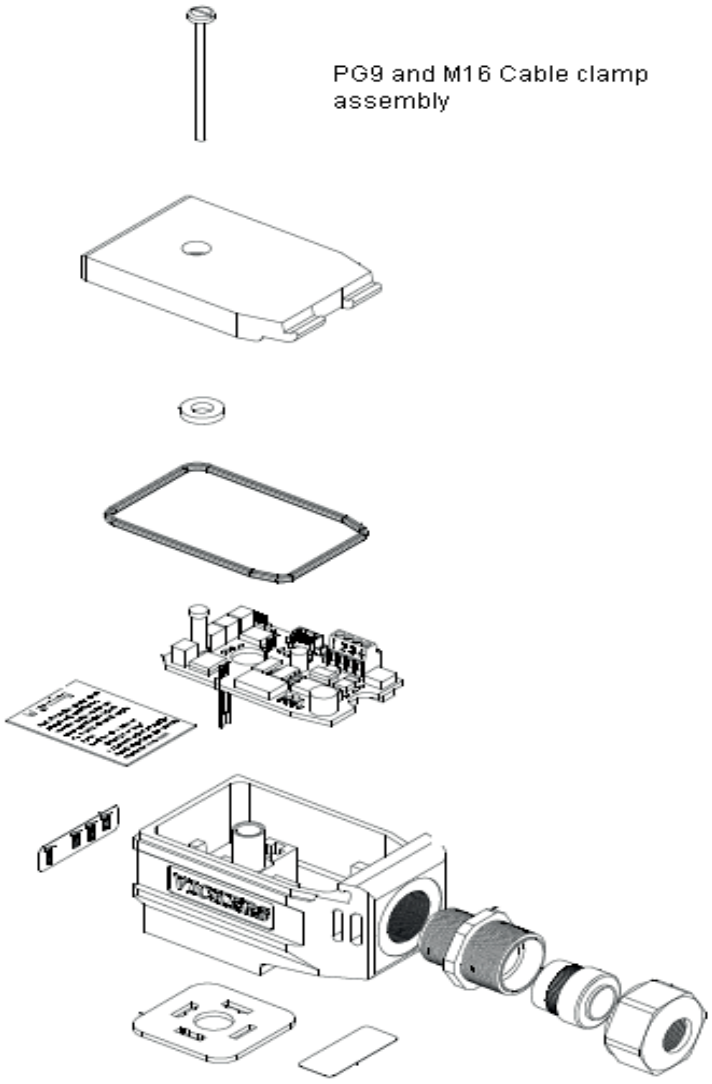

*All seals must be fitted correctly at plug installation to provide protection to IP67 (IEC 529).

Where measurements are critical request certified drawings. We reserve the right to change specifications without notice.

Start-Up procedure

- With the plug correctly wired but not mounted to the load provide with a DC power supply (See table).
- Apply the command signal (ON) and check the Power ON LED (RED) illuminates. Reduce the signal to the Command signal (OFF) level and check the LED (RED) goes out.
- If there is malfunction to the LED replace the plug.
- Switch off the power supply and command signal and connect the plug to the load. Ensure that the interface seal is correctly fitted and clamped between the mounting faces (essential for IP65 protection). Tighten the retaining screw.
- Ensure that no damage or injury will occur on the machine when the valve is operated.
- Switch on the power supply. Apply the command signal.
  (a) Observe Power On LED (RED) is ON.
  (b) Observe PWM LED (Orange) is ON.

  If LED is not operated then there is short circuit in the load. Replace the load/ load coil.
- Successful completion of these steps means that the plug and load are ready for normal use.

Spare parts

The only spare part available is the interface seal, part number 732100.

Ordering procedure

Order plug by full model code, and spare interface seals by part number 732100.

Where measurements are critical request certified drawings. We reserve the right to change specifications without notice.

Electronic controls

"Soft Switch" power plugs

EHH-AMP-702-C-*
10 Series

For use with valve types:

EPV-12D-1***
EFV1--012DE***
ERV1/2-12D-1***
EPRV1/3-12D-1***
ESV1-12D-1***
IRV-012D-1***
PFR21*
PFR24*
PDR21A*
PPD22-012D-1***

Application

Focus applications for this plug are in the control of hydraulic solenoid operated directional and pressure control valves where control of valve response time can significantly reduce shocks in the hydraulic system.

Best results in reducing hydraulic shocks will only be obtained by using valves with the right "low shock", or " proportional" features.

General description

These plugs, conforming to ISO 4400/DIN 43650 interface, offer adjustable, ramped on/off switching times through the use of an integral amplifier.

The switching time range is 50 ms to 5 seconds.

The soft switch plug is rated for 24V DC nominal and controlled by a 24V logic signal. Applying an "on" signal causes the output current to ramp up to, and stay at, an adjustable maximum while the "on" signal is maintained. At "switch-off" the output current is ramped down to zero and will remain at zero until the next "on" signal.

Ramp times (switching times) can be adjusted by an in-built potentiometer.

An adjustment also allows for compensation of any deadband in the valve.

Features and benefits

- Integral amplifier provides control from on/off logic command signal
- Adjustable ramp time
- Deadband compensation
- Adjustable output level
- Adjustable dither
- EMC to latest European standards
- Improved switching time repeatability
- Fully short-circuit and reverse-polarity protected
- Protection to IP67

Electrical block diagram

EHH-AMP-702-C-*
10 Series

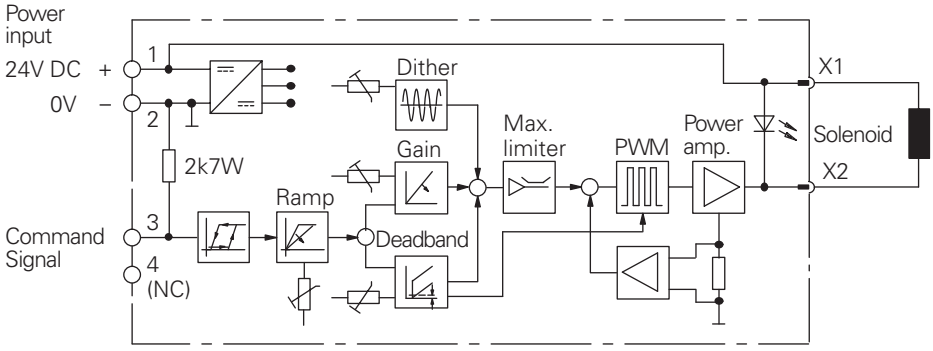

Note: This product has been designed and tested to meet specific standards outlined in the European Electro-magnetic Compatibility Directive (EMC) 89/336/EEC, amended by 91/26/EEC, 92/31/EEC and 93/68/EEC, article 5. For instructions on installation requirements to achieve effective protection levels, see this leaflet and the Installation Wiring Practices for Vickers Electronic Products leaflet 2468. Wiring practices relevant to this Directive are indicated by a warning symbol and Electromagnetic Compatibility (EMC).

Where measurements are critical request certified drawings. We reserve the right to change specifications without notice.

Model code

EHH - AMP - 702 - C - *

Operating data

Electrical

Connections 1 2 3 4	 24V DC OV (power and signal) Positive command signal Negative command signal
Power (input) supply	18 - 36V DC including ± 10% maximum ripple ripple (peak-to-peak) 24V DC nominal
Absolute maximum voltage	40V
Max. power consumption including solenoid	35W
Reverse polarity protected	Yes
Short circuit protected	Yes
Maximum output current	1,6A
Maximum output voltage typical (1,6A output current)	Typically 1,5V below supply voltage
Command signal For output (LED on) For no output (LED off) Input impedance	 11 to 24V 0V to 5V 10 KOhm ohms
Deadband adjustment range	<100 - 1000 mA
Gain adjustment range	0.02A to 1,6A (maximum)
Dither adjustment range	0 to 500 mA
Ramp time	50 ms to 5s
PWM frequency	1200 Hz ± 10%
Dither frequency	120 Hz ± 10%
Protection	IEC 529: IP67 (when correctly installed with interface seal in place) Fully short-circuit and reverse-polarity protected
Isolation to VDE 0110	Group "B"
Electromagnetic compatibility (EMC): Emission Immunity	 EN 50081-2 EN 50082-2

Mechanical

Housing	PA6 glass-reinforced plastic (conforming to UL-94HB). Color: gray
Mounting interface	ISO 4400 (DIN 43650)
Cable clamp	Pg9 screw type
Cable diameter	Ø 5 to 10 mm (0.197 to 0.394" dia.)
Wire section	0,5 to 1,0 mm2 (20-17 AWG)
Temperature, ambient range	-20° to +70°C (-4° to +158°F)
Mass	0,07 kg (0.154 lb)

Where measurements are critical request certified drawings. We reserve the right to change specifications without notice.

C

Input/Output characteristics

Functions

Switch-on/off: after switching on with a 11V signal the amplifier will remain in the "on" condition with a command signal above 6V. The command signal must be reduced to below 5V to achieve switch-off of the amplifier.

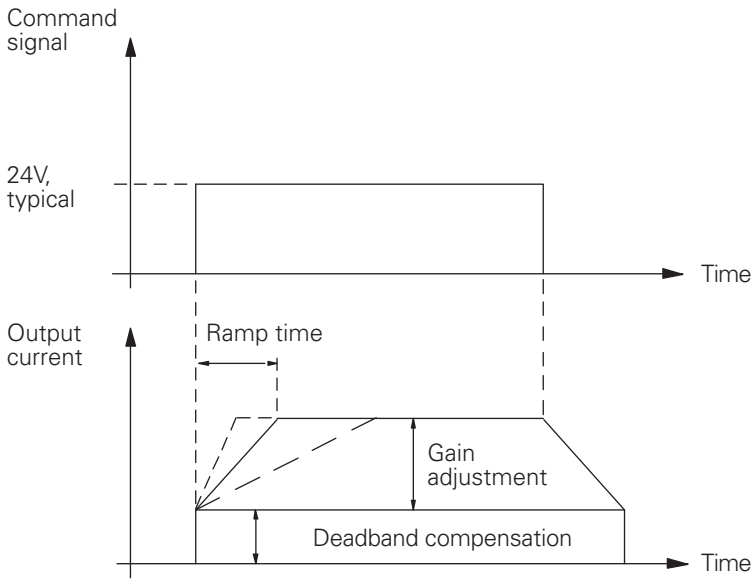

Installation dimensions

mm (inch)

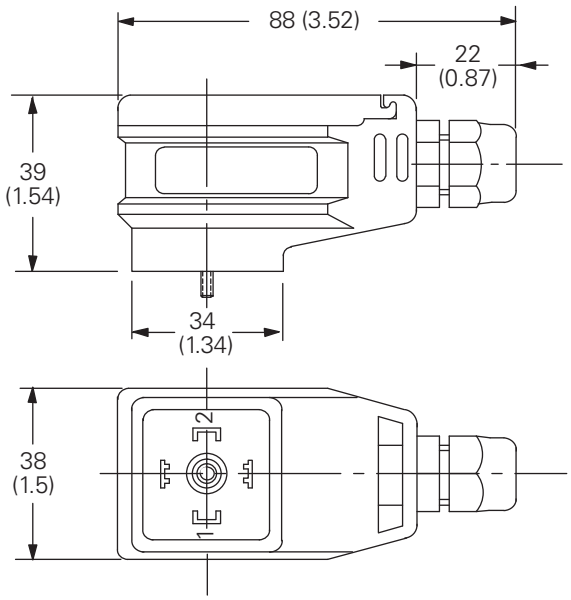



Solenoid Connections

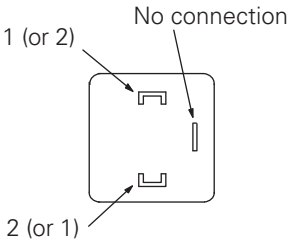

Where measurements are critical request certified drawings. We reserve the right to change specifications without notice.

Adjustments

Ramp time: Turn clockwise to increase ramp time.

Gain: Turn clockwise to increase gain.

Deadband compensation: Turn clockwise to increase deadband compensation current.

Dither: Turn clockwise to increase the dither current.

Terminal 1: Power Supply 18 - 36V DC, positive.

Terminal 2: Power Supply 0V.

Terminal 3: Switch command signal positive.

Terminal 4: Not connected

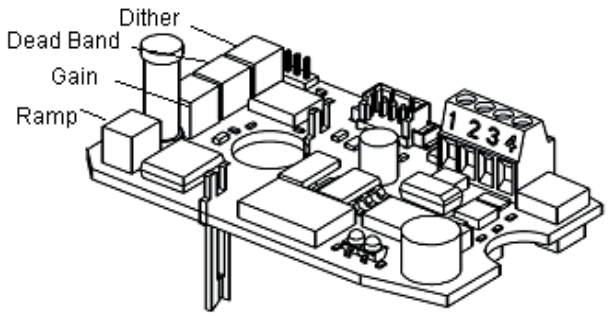

Installation wiring

⚠ **Warning**
Electromagnetic Compatibility (EMC) - Screened cables should be used and particular attention paid to the grounding of the screens as shown in the above diagram.

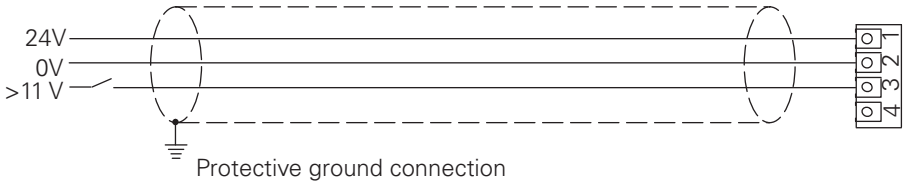

Assembly showing wiring connection points

⚠ Warning
Ensure cable clamp nut is adequately tightened to secure cable. Do not connect, or disconnect, the plug while power is on. Do not mount, or dismount, the plug while power is on.

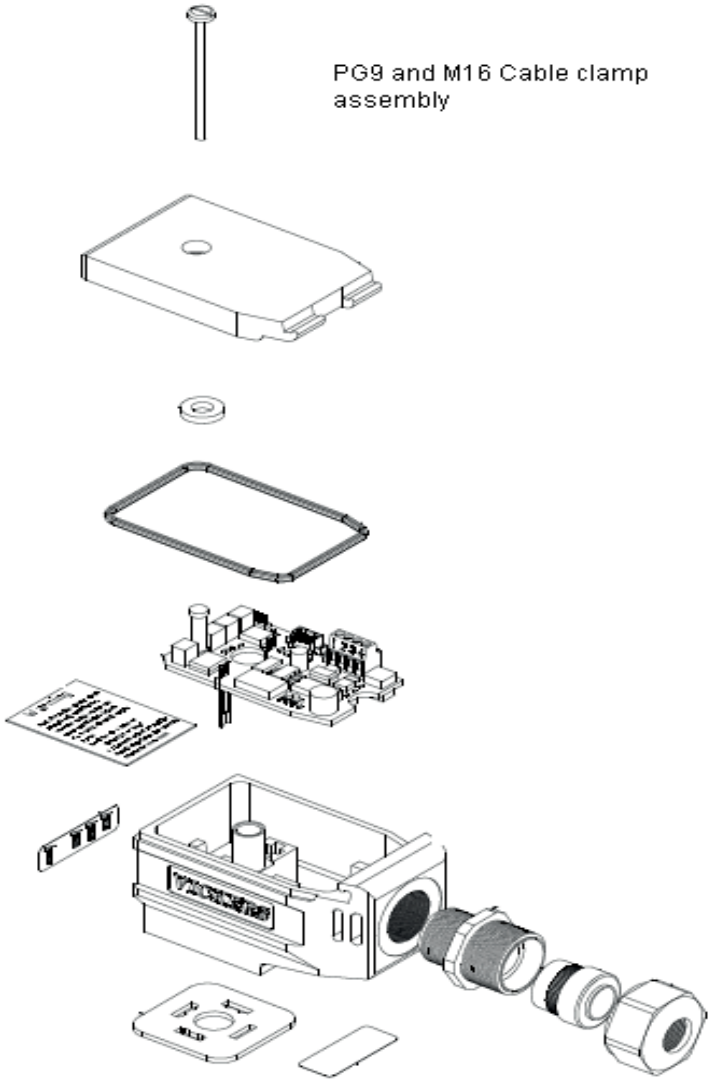

*All seals must be fitted correctly at plug installation to provide protection to IP67 (IEC 529).

Where measurements are critical request certified drawings. We reserve the right to change specifications without notice.

Start-Up procedure

- Correctly wire the plug and, before mounting it on the valve solenoid, apply 24V DC (18 to 36V limits) to the "power input" terminals.
- Check for correct plug function by illumination/ non-illumination of the LED:

a. Apply less than 2 to 3 volts to the input terminal: LED should not be illuminated.

b. Increase voltage: the LED should illuminate when the voltage reaches 11V. **Do not exceed 30V command signal.**

c. Decrease voltage: the LED should go off when the voltage is less than 5V.

- Switch off power supply and command/input signal and then install plug on solenoid. Ensure that all seals are fitted correctly and clamped as the retaining screw is tightened: this is essential in providing IP67 protection.
- Ensure that the hydraulic system will not cause any erratic movement of actuators, then:
  - Switch on power supply again.
  - Repeat LED/function check as in 2.

  An LED malfunction now indicates a short circuit at the load.
- Successful completion of these checks means that the plug and load are ready for use.

Spare parts

The only spare part available is the interface seal, part number 732100.

Ordering procedure

Order plug by full model code, and spare interface seals by part number 732100.

C

Directional controls

Manual and pilot operated directional control valves for applications up to 350 bar (5000 psi) and 265 L/min (70 USgpm)



EATON

Powering Business Worldwide

Directional controls

VALVE LOCATOR D-4
DIRECTIONAL CONTROLS D-5
ALTERNATIVE ADJUSTERS D-9
MRV3-10 - MANUAL ROTARY VALVE D-10
MRV13-10 - MANUAL ROTARY VALVE D-12
MRV13-12 - MANUAL ROTARY VALVE D-14
MRV3-16 - MANUAL ROTARY VALVE D-16
MRV13-16 - MANUAL ROTARY VALVE D-18
MRV4-10 - MANUAL ROTARY VALVE D-20
MRV14-10 - MANUAL ROTARY VALVE D-22
MRV14-12 - MANUAL ROTARY VALVE D-24
MRV4-16 - MANUAL ROTARY VALVE D-26
MRV14-16 - MANUAL ROTARY VALVE D-28
MRV5-10 - MANUAL ROTARY VALVE D-30
MRV15-10 - MANUAL ROTARY VALVE D-32
MRV15-12 - MANUAL ROTARY VALVE D-34
MRV5-16 - MANUAL ROTARY VALVE D-36
MRV15-16 - MANUAL ROTARY VALVE D-38
MRV6-10 - MANUAL ROTARY VALVE D-40
MRV6-16 - MANUAL ROTARY VALVE D-42
MRV7-10 - MANUAL ROTARY VALVE D-44
MLV9-12-A - DIRECTIONAL VALVE D-46
MLV9-12-B - DIRECTIONAL VALVE D-47
MLV9-12-E - DIRECTIONAL VALVE D-48
MLV9-12-F - DIRECTIONAL VALVE D-49
MLV9-12 - DIRECTIONAL VALVE D-50
3CP2 - SERIES CHECK VALVE D-52
MPV1-10 - MANUAL PULL VALVE D-54
MPV3-10 - MANUAL PULL VALVE D-56
MSV1-12 - MANUAL PUSH VALVE D-58
MSV11-10 - MANUAL PUSH VALVE D-60
MSV11-12 - MANUAL PUSH VALVE D-62
MSV2-12 - MANUAL PUSH VALVE D-64
MSV12-12 - MANUAL PUSH VALVE D-66
MSV5-12 - MANUAL PUSH VALVE D-68
MSV15-12 - MANUAL PUSH VALVE D-70
MSV3-12 - MANUAL PUSH VALVE D-72
MSV13-12 - MANUAL PUSH VALVE D-74
MSV4-12 - MANUAL PUSH VALVE D-76
MSV14-12 - MANUAL PUSH VALVE D-78
MSV6-12 - MANUAL PUSH VALVE D-80
MSV16-12 - MANUAL PUSH VALVE D-82
MSV17-10 - MANUAL PUSH VALVE D-84
MSV7-12 - MANUAL PUSH VALVE D-86
MSV17-12 - MANUAL PUSH VALVE D-88
PTS7-10 - PILOT TO SHIFT VALVE D-90
PTS17-10 - PILOT TO SHIFT VALVE D-92
PTS17-12 - PILOT TO SHIFT VALVE D-94
1SB10 - BRAKE SEQUENCE VALVE D-96
1SB304 - BRAKE RELEASE SHUTTLE VALVE ... D-98
1RDS702 - PILOT TO SHIFT VALVE D-100
PTS1-10 - PILOT TO SHIFT VALVE D-102
PTS11-12 - PILOT TO SHIFT VALVE D-104
PTS11-10 - PILOT TO SHIFT VALVE D-106
PTS1-16 - PILOT TO SHIFT VALVE D-108
PTS11-16 - PILOT TO SHIFT VALVE D-110
PTS11-20 - PILOT TO SHIFT VALVE D-112
PTS1-20 - PILOT TO SHIFT VALVE D-113
PTS12-10 - PILOT TO SHIFT VALVE D-114
PTS12-12 - PILOT TO SHIFT VALVE D-116
PTS2-16 - PILOT TO SHIFT VALVE D-118
PTS12-16 - PILOT TO SHIFT VALVE D-120
PTS2-20 - PILOT TO SHIFT VALVE D-122
PTS13-10 - PILOT TO SHIFT VALVE D-124
PTS13-12 - PILOT TO SHIFT VALVE D-126
PTS3-16 - PILOT TO SHIFT VALVE D-128
PTS13-16 - PILOT TO SHIFT VALVE D-130
PTS3-20 - PILOT TO SHIFT VALVE D-132
PTS14-12 - PILOT TO SHIFT VALVE D-134
PTS14-16 - PILOT TO SHIFT VALVE D-136

PTS5-10 - PILOT TO SHIFT VALVE D-138
PTS15-12 - PILOT TO SHIFT VALVE D-140
PTS5-16 - PILOT TO SHIFT VALVE D-142
PTS15-16 - PILOT TO SHIFT VALVE D-144
PTS6-16 - PILOT TO SHIFT VALVE D-146
PTS16-16 - PILOT TO SHIFT VALVE D-148
PTS9-8 - PILOT TO SHIFT VALVE D-150
PTS9-10 - PILOT TO SHIFT VALVE D-152
PTS9-12 - PILOT TO SHIFT VALVE D-154
PTS9-16 - PILOT TO SHIFT VALVE D-156
PTS9-20 - PILOT TO SHIFT VALVE D-158
DSV4-10 - SHUTTLE VALVE D-160
DSV4-12 - SHUTTLE VALVE D-162
DSV4-16 - SHUTTLE VALVE D-164
PTS6-10 - PILOT TO SHIFT VALVE D-166
PTS16-10 - PILOT TO SHIFT VALVE D-168
PTS16-12 - PILOT TO SHIFT VALVE D-170

Valve locator

Functional symbol

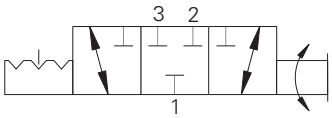

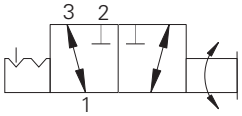

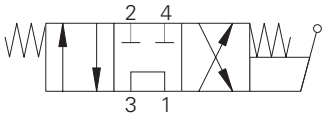

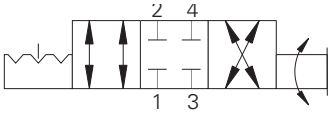

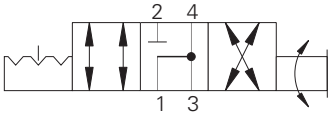

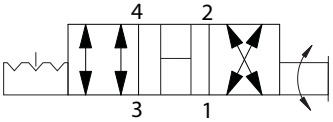

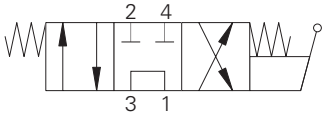

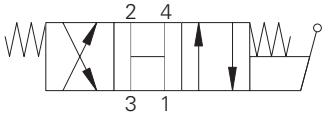

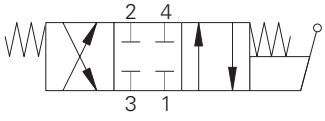

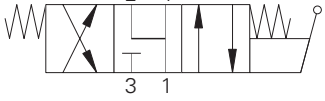

Model	Cavity	Flow rating	Typical pressure	Page
Manual rotary valve		**L/min (USgpm)**	**bar (psi)**	
MRV3-10	C-10-3	23 (6)	210 (3000)	D-10
MRV13-10	C-10-3	23 (6)	350 (5000)	D-12
MRV13-12	C-12-3	46 (12)	350 (5000)	D-14
MRV3-16	C-16-3	64 (17)	210 (3000)	D-16
MRV13-16	C-16-3	64 (17)	350 (5000)	D-18

Model	Cavity	Flow rating	Typical pressure	Page
Manual rotary valve		**L/min (USgpm)**	**bar (psi)**	
MRV4-10	C-10-4	11 (3)	210 (3000)	D-20
MRV14-10	C-10-4	11 (3)	350 (5000)	D-22
MRV14-12	C-12-4	23 (6)	350 (5000)	D-24
MRV4-16	C-16-4	45 (12)	210 (3000)	D-26
MRV14-16	C-16-4	45 (12)	350 (5000)	D-28

Model	Cavity	Flow rating	Typical pressure	Page
Manual rotary valve		**L/min (USgpm)**	**bar (psi)**	
MRV5-10	C-10-4	11 (3)	210 (3000)	D-30
MRV15-10	C-10-4	11 (3)	350 (5000)	D-32
MRV15-12	C-12-4	23 (6)	350 (5000)	D-34
MRV5-16	C-16-4	45 (12)	210 (3000)	D-36
MRV15-16	C-16-4	45 (12)	350 (5000)	D-38

Model	Cavity	Flow rating	Typical pressure	Page
Manual rotary valve		**L/min (USgpm)**	**bar (psi)**	
MRV6-10	C-10-4	11 (3)	210 (3000)	D-40
MRV6-16	C-16-4	11 (3)	300 (5000)	D-42

Model	Cavity	Flow rating	Typical pressure	Page
Manual rotary valve		**L/min (USgpm)**	**bar (psi)**	
MRV7-10	C-10-4	11 (3)	210 (3000)	D-44

Model	Cavity	Flow rating	Typical pressure	Page
Manual lever valve, spool		**L/min (USgpm)**	**bar (psi)**	
MLV9-12-A	C-12-4	60 (13.9)	210 (3000)	D-46

Model	Cavity	Flow rating	Typical pressure	Page
Manual lever valve, spool		**L/min (USgpm)**	**bar (psi)**	
MLV9-12-B	C-12-4	60 (15.9)	210 (3000)	D-47

Model	Cavity	Flow rating	Typical pressure	Page
Manual lever valve, spool		**L/min (USgpm)**	**bar (psi)**	
MLV9-12-E	C-12-4	60 (15.9)	210 (3000)	D-48

Model	Cavity	Flow rating	Typical pressure	Page
Manual lever valve, spool		**L/min (USgpm)**	**bar (psi)**	
MLV9-12-F	C-12-4	60 (15.9)	210 (3000)	D-49

Where measurements are critical request certified drawings. We reserve the right to change specifications without notice.

Functional symbol

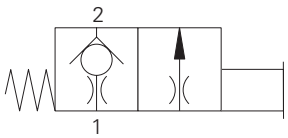

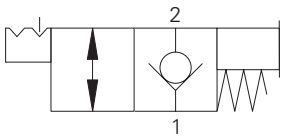

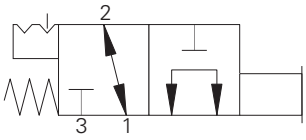

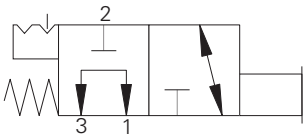

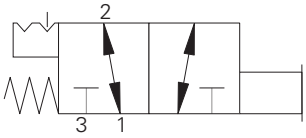

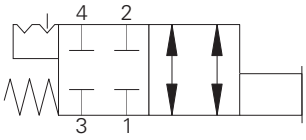

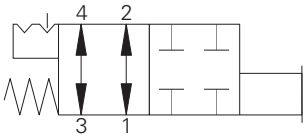

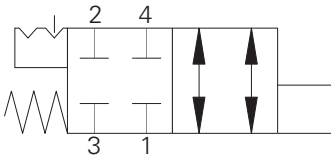

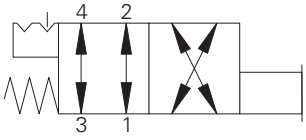

Model	Cavity	Flow rating	Typical pressure	Page
Check MO		**L/min (USgpm)**	**bar (psi)**	
3CP2	A879	5.5-15 (1.4-4)	210 (3000)	D-52

Model	Cavity	Flow rating	Typical pressure	Page
Manual pull valve, NC		**L/min (USgpm)**	**bar (psi)**	
MPV1-10	C-10-2	45 (12)	210 (3000)	D-54
MPV3-10	C-10-2	45 (12)	210 (3000)	D-56

Model	Cavity	Flow rating	Typical pressure	Page
Manual push valve		**L/min (USgpm)**	**bar (psi)**	
MSV1-12	C-12-3	41.8 (11)	210 (3000)	D-58
MSV11-10	C-10-3	23 (6)	350 (5000)	D-60
MSV11-12	C-12-3	30 (8)	350 (5000)	D-62
MSV12-12	C-12-3	38 (10)	350 (5000)	D-66

Model	Cavity	Flow rating	Typical pressure	Page
Manual push valve		**L/min (USgpm)**	**bar (psi)**	
MSV2-12	C-12-3	38 (10)	210 (3000)	D-64

Model	Cavity	Flow rating	Typical pressure	Page
Manual push valve		**L/min (USgpm)**	**bar (psi)**	
MSV5-12	C-12-3	41.8 (11)	210 (3000)	D-68
MSV15-12	C-12-3	41.8 (11)	350 (5000)	D-70

Model	Cavity	Flow rating	Typical pressure	Page
Manual push valve		**L/min (USgpm)**	**bar (psi)**	
MSV3-12	C-12-4	53.2 (14)	210 (3000)	D-72
MSV13-12	C-12-4	53.2 (14)	350 (5000)	D-74

Model	Cavity	Flow rating	Typical pressure	Page
Manual push valve		**L/min (USgpm)**	**bar (psi)**	
MSV4-12	C-12-4	53.2 (14)	210 (3000)	D-76
MSV14-12	C-12-4	53.2 (14)	350 (5000)	D-78

Model	Cavity	Flow rating	Typical pressure	Page
Manual push valve		**L/min (USgpm)**	**bar (psi)**	
MSV6-12	C-12-4	53.2 (14)	210 (3000)	D-80
MSV16-12	C-12-4	53.2 (14)	350 (5000)	D-82

Model	Cavity	Flow rating	Typical pressure	Page
Manual push valve		**L/min (USgpm)**	**bar (psi)**	
MSV17-10	C-12-4	20 (5.3)	350 (5000)	D-84
MSV7-12	C-12-4	45 (11.9)	210 (3000)	D-86
MSV17-12	C-12-4	20 (5)	350 (5000)	D-88

Where measurements are critical request certified drawings. We reserve the right to change specifications without notice.

Directional controls

Valve locator

Functional symbol

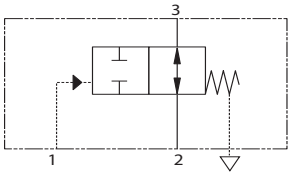

Model	Cavity	Flow rating	Typical pressure	Page
Pilot to shift 2/2 valve		**L/min (USgpm)**	**bar (psi)**	
PTS7-10	C-10-3	30 (8)	210 (3000)	D-90
PTS17-10	C-10-3	30 (8)	350 (5000)	D-92
PTS17-12	C-12-3	114 (30)	350 (5000)	D-94

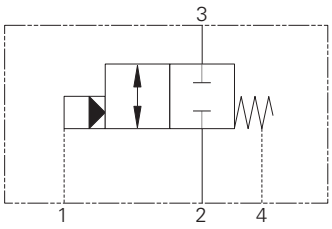

Model	Cavity	Flow rating	Typical pressure	Page
Pilot to shift 2/2 valve		**L/min (USgpm)**	**bar (psi)**	
1RDS702	A21145	80 (20)	420 (6090)	D-100

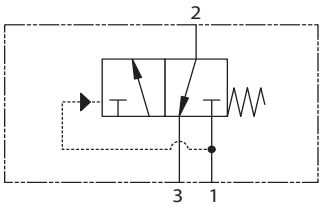

Model	Cavity	Flow rating	Typical pressure	Page
Brake sequence		**L/min (USgpm)**	**bar (psi)**	
1SB10	A893	10 (2.5)	350 (5000)	D-96

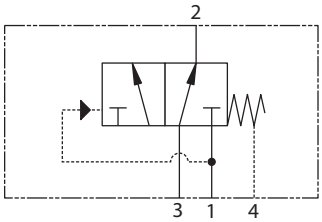

Model	Cavity	Flow rating	Typical pressure	Page
Brake release shuttle		**L/min (USgpm)**	**bar (psi)**	
1SB304	A5302	30 (8)	350 (5000)	D-98

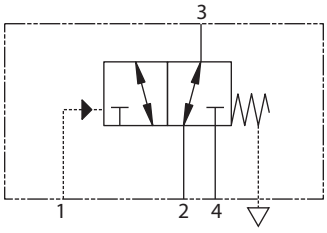

Model	Cavity	Flow rating	Typical pressure	Page
Pilot to shift valve		**L/min (USgpm)**	**bar (psi)**	
PTS1-10	C-10-4	30 (8)	210 (3000)	D-102
PTS11-12	C-12-4	76 (20)	350 (5000)	D-104
PTS11-10	C-10-4	30 (8)	350 (5000)	D-106
PTS1-16	C-16-4	132 (35)	210 (3000)	D-108
PTS11-16	C-16-4	132 (35)	350 (5000)	D-110
PTS1-20	C-20-4	265 (70)	210 (3000)	D-113

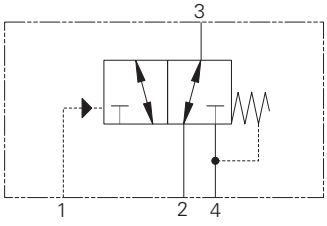

Model	Cavity	Flow rating	Typical pressure	Page
Pilot to shift valve		**L/min (USgpm)**	**bar (psi)**	
PTS12-10	C-10-4	30 (8)	350 (5000)	D-114
PTS12-12	C-12-4	114 (30)	350 (5000)	D-116
PTS2-16	C-16-4	132 (35)	210 (3000)	D-118
PTS12-16	C-16-4	132 (35)	350 (5000)	D-120
PTS2-20	C-20-4	265 (70)	210 (3000)	D-122

Where measurements are critical request certified drawings. We reserve the right to change specifications without notice.

Functional symbol

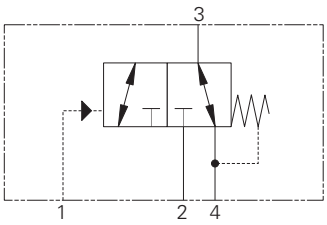

Model	Cavity	Flow rating	Typical pressure	Page
Pilot to shift valve		**L/min (USgpm)**	**bar (psi)**	
PTS13-10	C-10-4	30 (8)	350 (5000)	D-124
PTS13-12	C-12-4	114 (30)	350 (5000)	D-126
PTS3-16	C-16-4	132 (35)	210 (3000)	D-128
PTS13-16	C-16-4	132 (35)	350 (5000)	D-130
PTS3-20	C-20-4	265 (70)	210 (3000)	D-132
PTS6-16	C-16-4	132 (35)	210 (3000)	D-146
PTS16-16	C-16-4	132 (35)	350 (5000)	D-148

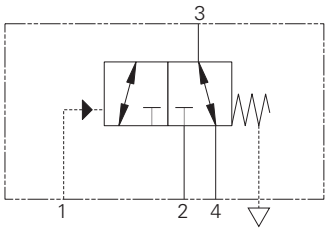

Model	Cavity	Flow rating	Typical pressure	Page
Pilot to shift valve		**L/min (USgpm)**	**bar (psi)**	
PTS14-12	C-12-4	114 (30)	350 (5000)	D-134
PTS14-16	C-16-4	132 (35)	350 (5000)	D-136
PTS5-16	C-16-4	132 (35)	210 (3000)	D-142
PTS15-16	C-16-4	132 (35)	350 (5000)	D-144

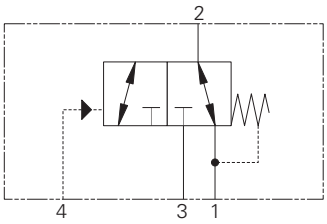

Model	Cavity	Flow rating	Typical pressure	Page
Pilot to shift valve		**L/min (USgpm)**	**bar (psi)**	
PTS5-10	C-10-3	11 (3)	210 (3000)	D-138
PTS15-12	C-12-3	105 (28)	350 (5000)	D-140

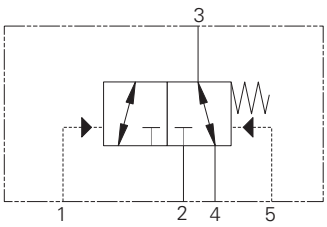

Model	Cavity	Flow rating	Typical pressure	Page
Pilot to shift valve		**L/min (USgpm)**	**bar (psi)**	
PTS9-8	C-8-5S	19 (5)	280 (4000)	D-150
PTS9-10	C-10-5S	38 (10)	280 (4000)	D-152
PTS9-12	C-12-5S	76 (20)	280 (4000)	D-154
PTS9-16	C-16-5S	151 (40)	280 (4000)	D-156
PTS9-20	C-20-5S	230 (60)	280 (4000)	D-158

D

Where measurements are critical request certified drawings. We reserve the right to change specifications without notice.

Directional controls

Valve locator

Functional symbol

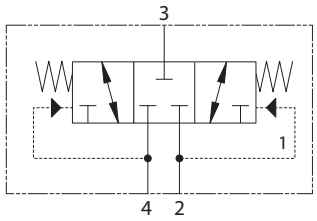

Model	Cavity	Flow rating	Typical pressure	Page
Sequence		**L/min (USgpm)**	**bar (psi)**	
DSV4-10	C-10-4	26 (6.9)	350 (5000)	D-160
DSV4-12	C-12-4	113 (29.9)	350 (5000)	D-162
DSV4-16	C-16-4	190 (50)	350 (5000)	D-164

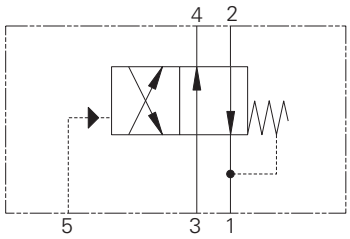

Model	Cavity	Flow rating	Typical pressure	Page
Pilot to shift valve		**L/min (USgpm)**	**bar (psi)**	
PTS6-10	C-10-4	23 (6)	210 (3000)	D-166
PTS16-10	C-10-4	23 (6)	350 (5000)	D-168
PTS16-12	C-12-4	76 (20)	350 (5000)	D-170

D

Directional controls

Introduction

This section gives the basic specifications for the complete line of Eaton's Integrated Hydraulics threaded cartridge non-solenoid directional control valves. Its purpose is to provide a quick, convenient reference tool when choosing Vickers cartridge valves or designing a system using these components.

Two pressure ratings are shown for all products featured in this catalog – typical application pressure and fatigue pressure. The typical application pressure rating is the maximum recommended operating pressure for the valve in a given system. The fatigue pressure rating is the pressure for the valve to be free for infinite life from metal fatigue.

Features and benefits

- Products in this catalog have been fatigue tested for one million cycles at 132% or 10 million cycles at 115% of rated pressure.
- All operating parts are hardened steel, ground and honed for long life and low leakage.
- Designed for maximum flexibility and minimal space requirements.
- All exposed cartridge surfaces are zinc dichromate plated to resist corrosion.
- All aluminum manifolds are gold anodized to resist corrosion.
- Desired settings may be locked down.
- Aluminum knob and cap options are available on some models.
- Reliable, economical and compact.

⚠ Warning

For pressure over 210 bar (3000 psi) use steel housing.

Where measurements are critical request certified drawings. We reserve the right to change specifications without notice.

D(2)
Size 10

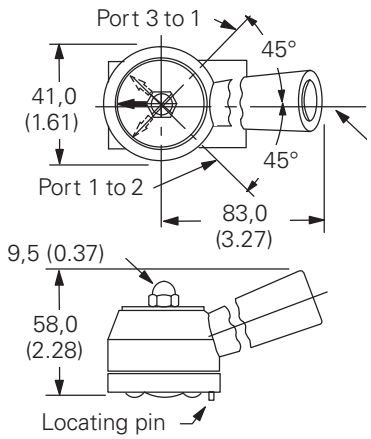

Size 10
E(2)

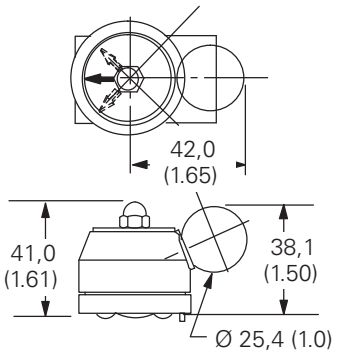

Size 10
Locating PIN installation

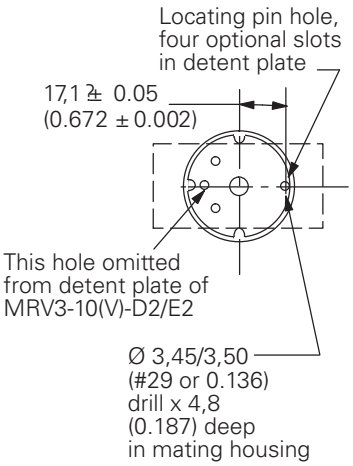

D(2)
Size 12

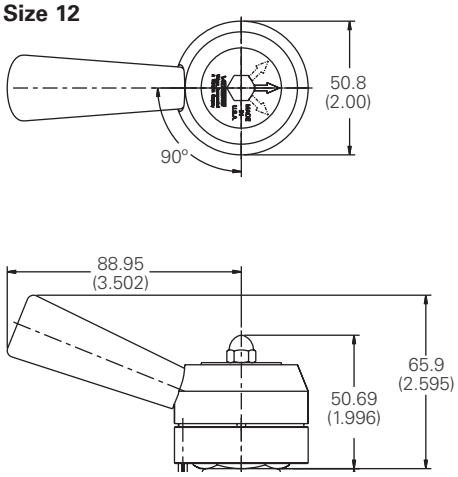

Size 12
E(2)

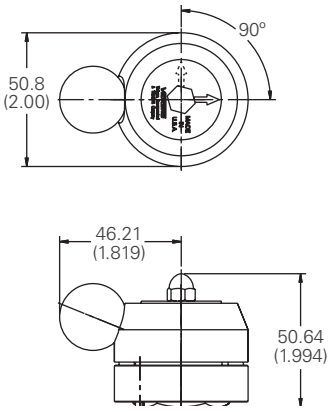

Size 12
Locating PIN installation

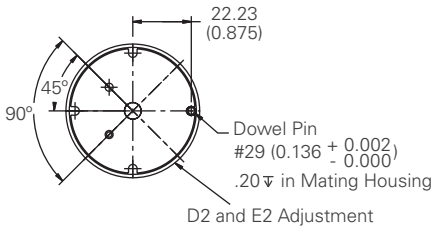

D(2)
Size 16

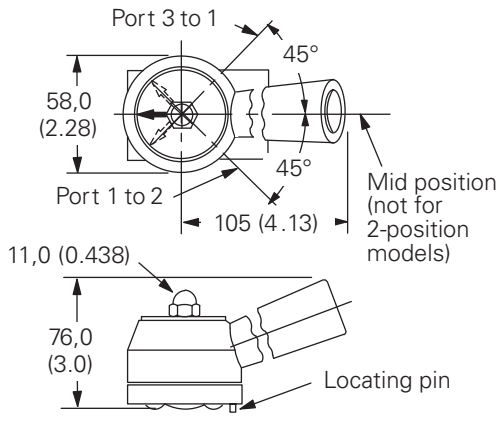

Size 16
Locating PIN installation

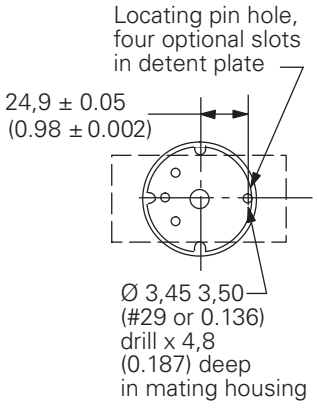

D

Where measurements are critical request certified drawings. We reserve the right to change specifications without notice.

MRV3-10 - Manual rotary valve

Manual semi-rotary directional control valve
23 L/min (6 USgpm) • 210 bar (3000 psi)

MRV3-10(V)-D/E
3 position models

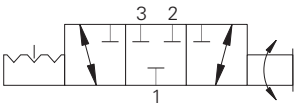

Operation

This valve will direct flow between ports 1 and 3 and block port 2 in one position.

By turning the operator 90°, flow will be directed between ports 1 and 2 and port 3 will be blocked. During cross-over transition, all ports are blocked.

Features

Hardened, ground and honed working parts to limit leakage and prolong life. Various levers and knobs available with and without detent.

MRV3-10(V)-D/E
2 position models

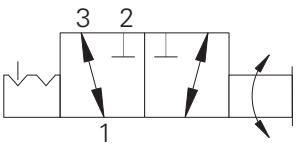

D

Sectional view

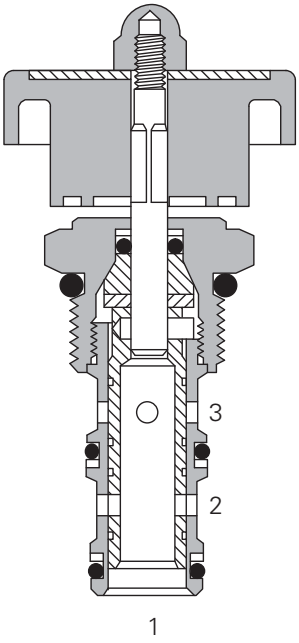

Description

This is a 3 way 2 or 3 position manual semi-rotary directional control valve. Can be used as a diverter or a dump valve.

Performance data

Ratings and specifications

Performance data is typical with fluid at 21,8 cSt (105 SUS) and 49°C (120°F)	
Typical application pressure (all ports)	210 bar (3000 psi)
Cartridge fatigue pressure (infinite life)	210 bar (3000 psi)
Rated flow	23 L/min (6 US gpm)
Temperature range	-40°C to 120°C (-40° to 248°F)
Manual operators	D - Lever (3-position detent)* D2 - Lever (2-position detent)* E - Ball (3-position detent)* E2 - Ball (2-position detent)* K - Knob (2-position, no detent)
Cavity	C-10-3
Fluids	All general purpose hydraulic fluids such as: MIL-H-5606, SAE 10, SAE 20 etc.
Filtration	Cleanliness code 18/**16/13**
Standard housing material	Aluminum or Steel
Weight cartridge only	0,22 kg (0.4 lbs)
Seal kit	565804 (Buna-N), 889599 (Viton®)

*Light duty housing only.
Viton is a registered trademark of E.I. DuPont

Pressure drop curves

Cartridge only

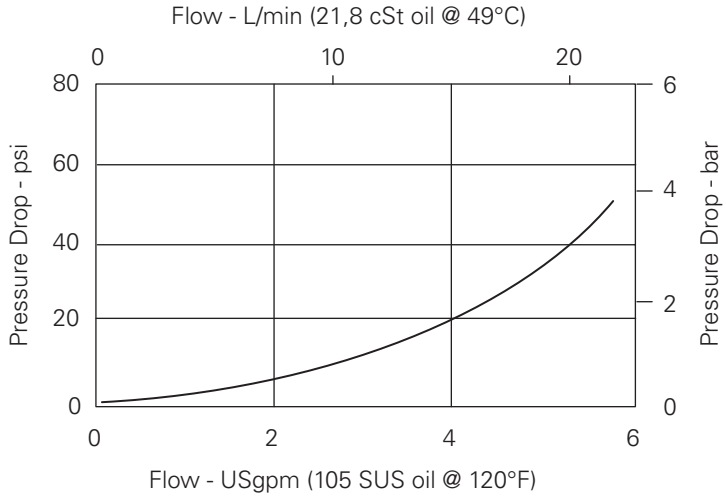

Where measurements are critical request certified drawings. We reserve the right to change specifications without notice.

MRV3-10 - Manual rotary valve

Manual semi-rotary directional control valve
23 L/min (6 USgpm) • 210 bar (3000 psi)

Model code

MRV3 – 10 – (V) – ** – * – 00**

1 2 3 4 5 6

1 Function

MRV3 - Manual rotary valve 4-way

2 Size

10 - 10 size

3 Seal material

Blank - Buna-N
V - Viton

4 Manual operator

O - No operator
D - Level (3-position detent)
D2 - Level (2-position detent)
E - Ball (3-position detent)
E2 - Ball (2-position detent)
K - Knob (2-position, no detent)

5 Port size

Code	Port size	Housing number	
		Aluminum Fatigue Rated	Steel
0	Cartridge		
A3B	3/8" BSPP	02-173358*	
A6T	SAE 6	5566162*	
A2G	1/4" BSPP	876705	
A3G	3/8" BSPP	876714	
A6H	SAE 6	876704	
A8H	SAE 8	876711	
S2G	1/4" BSPP		02-175127
S3G	3/8" SAE		02-175128
S6T	SAE 6		02-175124
S8T	SAE 8		02-175125

See section J for housing details.
* Aluminum light duty.

6 Special features

00 - None
(Only required if valve has special features, omitted if "00".)

SS - 316 stainless steel external components (only available for "0" and "F" options).

D

Dimensions

mm (inch)

Torque cartridge in aluminum housing 47-54 Nm (35-40 ft. lbs)

Cartridge only

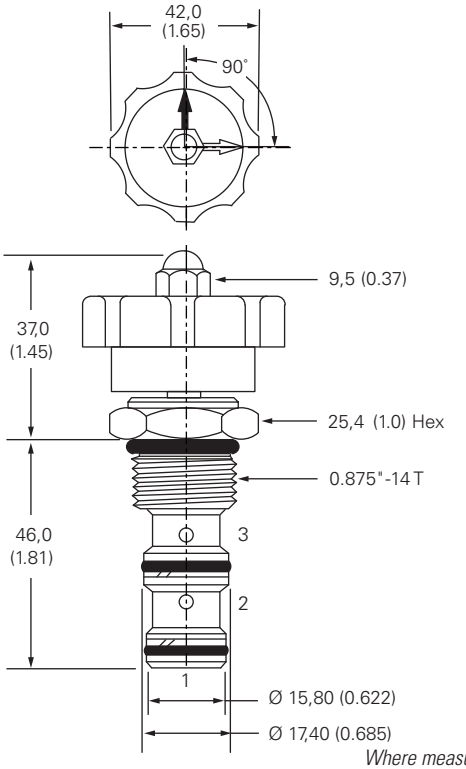

Installation drawing (aluminum)

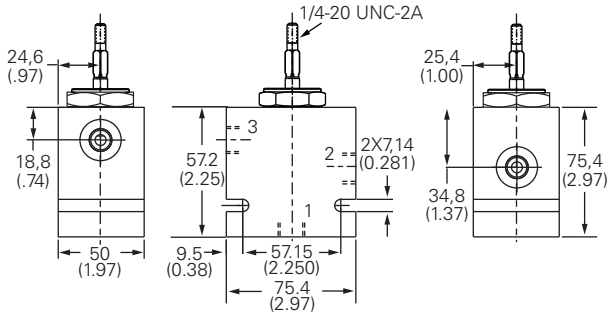

Where measurements are critical request certified drawings. We reserve the right to change specifications without notice.

MRV13-10 - Manual rotary valve

Manual semi-rotary directional control valve
23 L/min (6 USgpm) • 350 bar (5000 psi)

MRV13-10(V)-D/E
3 position models

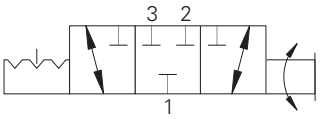

MRV13-10(V)-D2/2E
2 position models

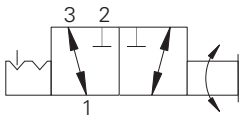

D

Sectional view

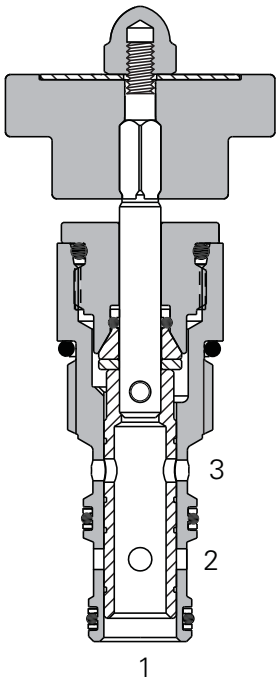

"K" TYPE OPTION

Description

This is a high pressure 3 way 2 or 3 position manual semi-rotary directional control valve. Can be used as a diverter or a dump valve.

Operation

This valve will direct flow between ports 1 and 3 and block port 2 in one position.

By turning the operator 90°, flow will be directed between ports 1 and 2 and port 3 will be blocked. During cross-over transition, all ports are blocked.

Features

Hardened, ground and honed working parts to limit leakage and prolong life. Various levers and knobs available with and without detent. Working pressure 350 bar.

Performance data

Ratings and specifications

Performance data is typical with fluid at 21,8 cSt (105 SUS) and 49°C (120°F)	
Typical application pressure (all ports)	350 bar (5000 psi)
Cartridge fatigue pressure (infinite life)	350 bar (5000 psi)
Rated flow	23 L/min (6 USgpm)
Internal leakage	250 cc/min (15in³/min) @ 350 bar (5000 psi)
Temperature range	-40° to 120°C (-40° to 248°F)
Manual operators	D- Lever (3-position detent)* D2 - Lever (2-position detent)* E - Ball (3-position detent)* E2- Ball (2-position detent)* K- Knob (2-position, no detent
Cavity	C-10-3
Fluids	All general purpose hydraulic fluids such as MIL-H-5606, SAE 10, SAE 20, etc.
Filtration	Cleanliness code 18/**16/13**
Standard housing materials	Aluminum or Steel
Weight cartridge only	0,22 kg (0.48 lbs)
Seal kit	565804 (Buna-N), 889599 (Viton®)

* Light duty housing only.
Viton is a registered trademark of E.I. DuPont

Pressure drop curves

Cartridge only

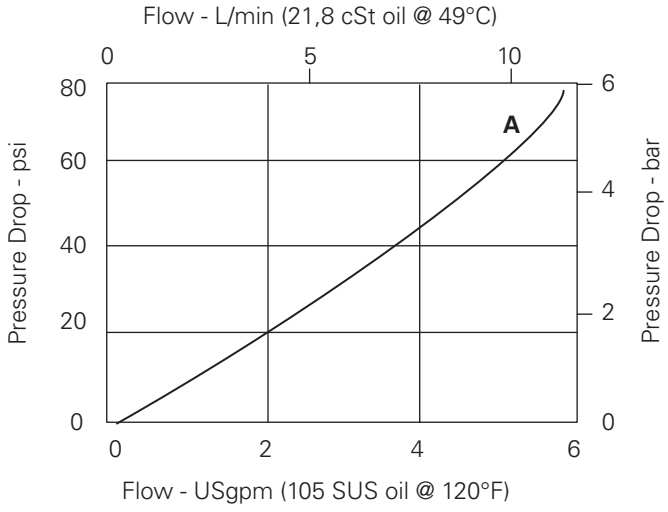

Where measurements are critical request certified drawings. We reserve the right to change specifications without notice.

MRV13-10 - Manual rotary valve

Manual semi-rotary directional control valve
23 L/min (6 USgpm) • 350 bar (5000 psi)

Model code

MRV13 – 10 – (V) – ** – * – 00**

1 2 3 4 5 6

1 Function
MRV13 - Manual rotary valve

2 Size
10 - 10 size

3 Seals
Blank - Buna-N
V - Viton®

4 Manual operator
0 - No operator
D - Level (3-position detent)
D2 - Level (2-position detent)
E - Ball (3-position detent)
E2 - Ball (2-position detent)
K - Knob (2-position, no detent)

5 Port size
0 - Cartridge only

6 Special features
00 -Non (Only required if valve has special features, omitted if "00").

Code	Port size	Housing number	
0		**Aluminum Fatigue Rated**	**Steel**
A2G	1/4" BSPP	02-185804	
A3G	3/8" BSPP	02-185805	
A6H	SAE 6	02-185802	
A8H	SAE 8	02-185803	
S2G	1/4" BSPP		02-175127
S3G	1/3" BSPP		02-175128
S6T	SAE 6		02-175124
S8T	SAE 8		02-175125

Dimensions
mm (inch)

Torque cartridge in housing
A - 47-54 Nm (35-40 ft. lbs)
S - 68-75 Nm (50-55 ft. lbs)

Cartridge only

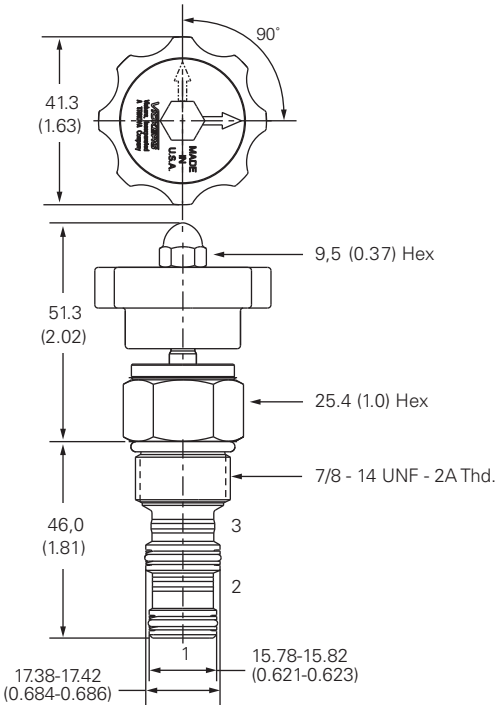

Installation drawing (steel)

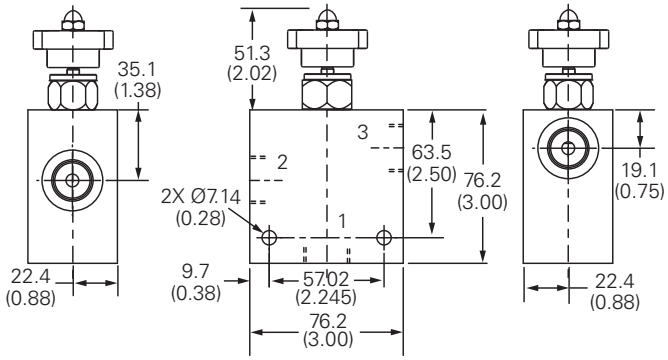

⚠ Warning

Aluminum housings can be used for pressures up to 210 bar (3000 psi). Steel housings must be used for operating pressures above 210 bar (3000 psi).

Where measurements are critical request certified drawings. We reserve the right to change specifications without notice.

MRV13-12 - Manual rotary valve

Manual semi-rotary directional control valve
46 L/min (12 USgpm) • 350 bar (5000 psi)

MRV13-12(V)-D/E
3 position models

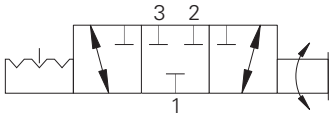

MRV13-12(V)-D2/2E
2 position models

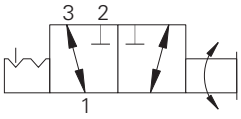

D

Sectional view

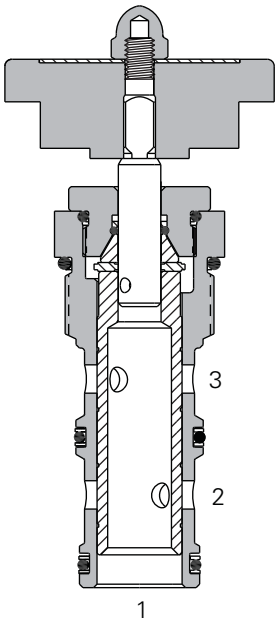

Description

This is a high pressure 3 way 2 or 3 position manual semi-rotary directional control valve. Can be used as a diverter or a dump valve.

Operation

This valve will direct flow between ports 1 and 3 and block port 2 in one position.

By turning the operator 90°, flow will be directed between ports 1 and 2 and port 3 will be blocked. During cross-over transition, all ports are blocked.

Features

Hardened, ground and honed working parts to limit leakage and prolong life. Various levers and knobs available with and without detent. Working pressure 350 bar.

Performance data

Ratings and specifications

Performance data is typical with fluid at 21,8 cSt (105 SUS) and 49°C (120°F)	
Typical application pressure (all ports)	350 bar (5000 psi)
Cartridge fatigue pressure (infinite life)	350 bar (5000 psi)
Rated flow	46 L/min (12 USgpm)
Internal leakage	250 cc/min (15in³/min) @ 350 bar (5000 psi)
Temperature range	-40°to 120°C(-40° to 248°F)
Manual operators	D- Lever (3-position detent)* D2 - Lever (2-position detent)* E - Ball (3-position detent)* E2- Ball (2-position detent)* K- Knob (2-position, no detent)
Cavity	C-I2-3
Fluids	All general purpose hydraulic fluids such as: MIL-H -5606, SAE 10, SAE 20, etc.
Filtration	Cleanliness code 18/**16/13**
Standard housing materials	Aluminum or Steel
Weight cartridge only	0.32 kg (0.70 lbs)
Seal kit	02-180095 (Buna-N), 02-165887 (Viton®)

* Light duty housing only.
Viton is a registered trademark of E.I. DuPont

Pressure drop curves

Cartridge only

A - Port 1-3
B - Port 1-2

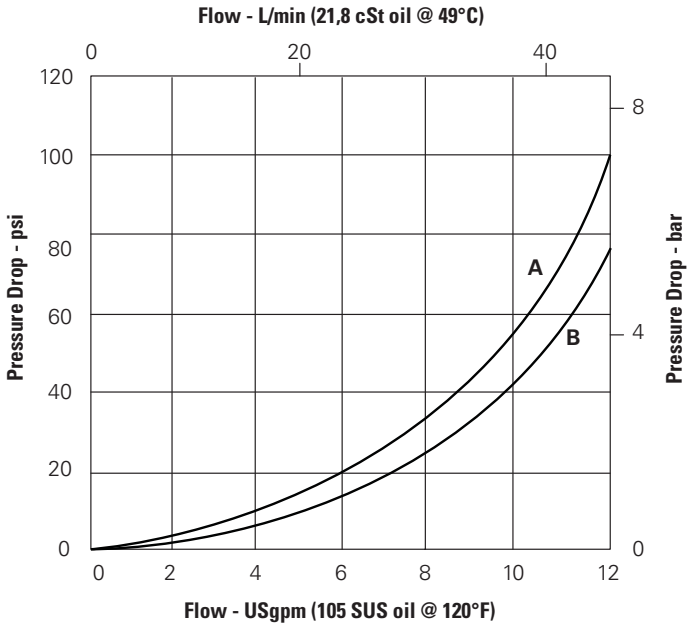

Where measurements are critical request certified drawings. We reserve the right to change specifications without notice.

MRV13-12 - Manual rotary valve

Manual semi-rotary directional control valve
46 L/min (12 USgpm) • 350 bar (5000 psi)

Model code

MRV13 – 12 – (V) – ** – ** – 00

1 2 3 4 5 6

1 Function
MRV13 - Manual rotary valve

2 Size
12 - 12 size

3 Seals
Blank - Buna-N
V - Viton®

4 Manual operator
0 - No operator
D - Level (3-position detent)
D2 - Level (2-position detent)
E - Ball (3-position detent)
E2 - Ball (2-position detent)
K - Knob (2-position, no detent)

5 Port size
0 - Cartridge only

6 Special features
00 -Non (Only required if valve has special features, omitted if "00").

Code	Port size	Housing number	
0		**Aluminum fatigue rated**	**Steel**
A4G	1/2" BSPP	02-161817	
A6G	3/4" BSPP	02-161816	
A10H	SAE 10	02-160642	
A12H	SAE 12	02-160646	
S4G	1/2" BSPP		02-169815
S6G	3/4" BSPP		02-169814
S10T	SAE 10		02-161070
S12T	SAE 12		02-169816

Dimensions
mm (inch)

Torque cartridge in housing
A - 81-95 Nm (60-70 ft. lbs)
S - 102-115 Nm (75-85 ft. lbs)

Cartridge only

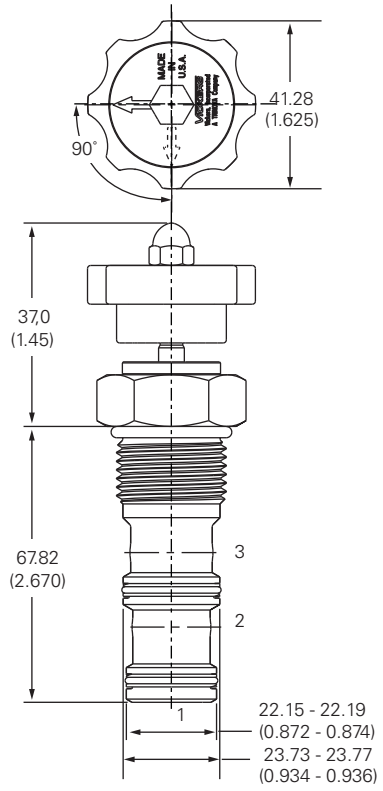

Installation drawing (steel)

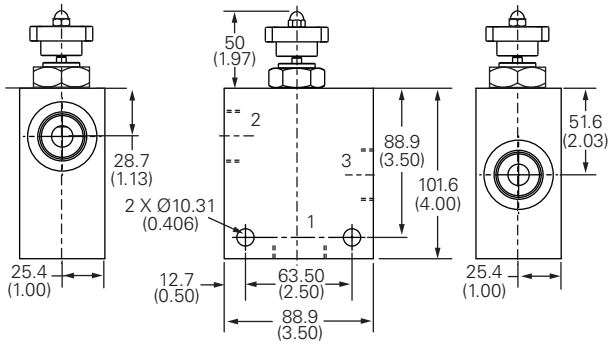

⚠ Warning

Aluminum housings can be used for pressures up to 210 bar (3000 psi). Steel housings must be used for operating pressures above 210 bar (3000 psi).

Where measurements are critical request certified drawings. We reserve the right to change specifications without notice.

MRV3-16 - Manual rotary valve

Manual semi-rotary directional control valve
64 L/min (17 USgpm) • 210 bar (3000 psi)

MRV3-16(V)-D
3 position models

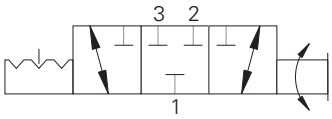

MRV3-16(V)-D2
2 position models

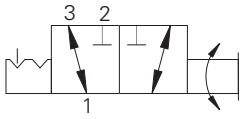

D

Sectional view

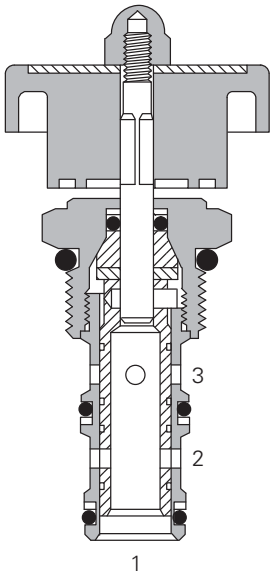

Description

This is a 3 way 2 or 3 position manual semi-rotary directional control valve. Can be used as a diverter or a dump valve.

Operation

This valve will direct flow between ports 1 and 3 and block port 2 in one position.

By turning the operator 90°, flow will be directed between ports 1 and 2 and port 3 will be blocked. During cross-over transition, all ports are blocked.

Features

Hardened, ground and honed working parts to limit leakage and prolong life. Various levers and knobs available with and without detent.

Performance data

Ratings and specifications

Performance data is typical with fluid at 21,8 cSt (105 SUS) and 49°C (120°F)	
Typical application pressure (all ports)	210 bar (3000 psi)
Cartridge fatigue pressure (infinite life)	210 bar (3000 psi)
Rated flow	64 L/min (17 US gpm)
Temperature range	-40°C to 120°C (-40° to 248°F)
Manual operators	D - Lever (3-position detent)* D2 - Lever (2-position detent)* K - Knob (2-position, no detent)
Cavity	C-16-3
Fluids	All general purpose hydraulic fluids such as: MIL-H-5606, SAE 10, SAE 20 etc.
Filtration	Cleanliness code 18/**16/13**
Standard housing material	Aluminum or Steel
Weight cartridge only	0,53 kg (1.16 lbs)
Seal kit	889632 (Buna-N), 889636 (Viton®)

* Light duty housing only.
Viton is a registered trademark of E.I. DuPont

Pressure drop curves

Cartridge only

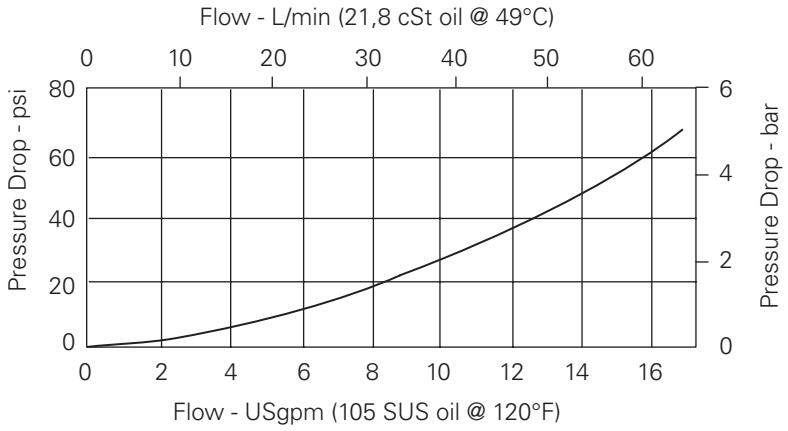

Where measurements are critical request certified drawings. We reserve the right to change specifications without notice.

MRV3-16 - Manual rotary valve

Manual semi-rotary directional control valve
64 L/min (17 USgpm) • 210 bar (3000 psi)

Model code

MRV3 – 16 – (V) – ** – * – 00**

1 2 3 4 5 6

1 Function

MRV13 - Manual rotary valve 4-way

2 Size

16 - 16 size

3 Seal material

Blank - Buna-N
V - Viton

4 Manual operator

O - No operator
D - Level (3-position detent)
D2 - Level (2-position detent)
K - Knob (2-position, no detent)

5 Port size

Code	Port size	Housing number	
		Aluminum fatigue rated	Steel
0	Cartridge		
A12T	SAE12	566152*	
A6B	3/4" BSPP	02-1754165*	
A10H	SAE10	876721	
A12H	SAE12	876723	
A4G	1/2" BSPP	876720	
A6G	3/4" BSPP	876722	
S4G	1/2" BSPP		02-175131
S6G	3/4" BSPP		02-175132
S10T	SAE 10		02-175129
S12T	SAE 12		02-175130

See section J for housing details.
* Aluminum light duty.

6 Special features

00 - None
(Only required if valve has special features, omit if "00".)

D

Dimensions

mm (inch)

Torque cartridge in aluminum housing 108-122 Nm (80-90 ft. lbs)

Cartridge only

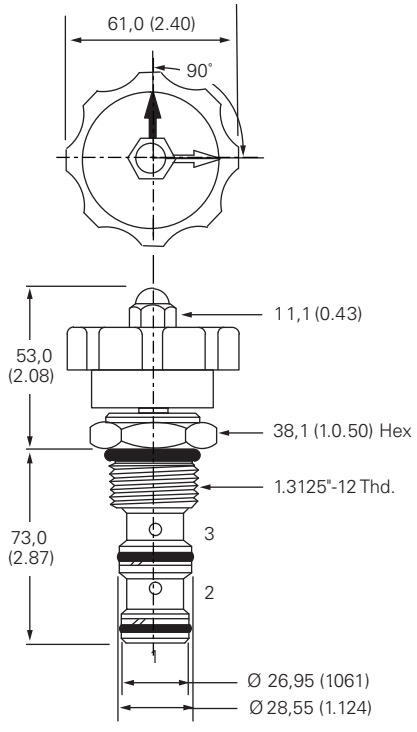

Installation drawing (aluminum)

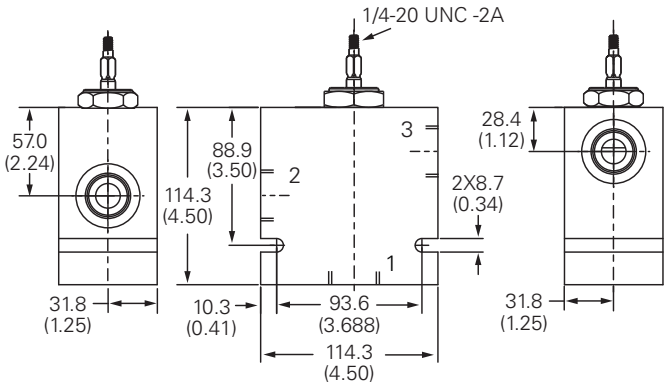

Where measurements are critical request certified drawings. We reserve the right to change specifications without notice.

MRV13-16 - Manual rotary valve

Manual semi-rotary directional control valve
64 L/min (17 USgpm) • 350 bar (5000 psi)

MRV13-16(V)-D
3 position models

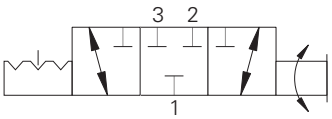

Operation

This valve will direct flow between ports 1 and 3 and block port 2 in one position.

By turning the operator 90°, flow will be directed between ports 1 and 2 and port 3 will be blocked. During cross-over transition, all ports are blocked.

Features

Hardened, ground and honed working parts to limit leakage and prolong life. Various levers and knobs available with and without detent. Working pressure 350 bar.

MRV13-16(V)-D2
2 position models

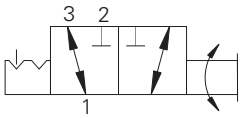

D

Performance data

Ratings and specifications

Performance data is typical with fluid at 21,8 cSt (105 SUS) and 49°C (120°F)	
Typical application pressure (all ports)	350 bar (5000 psi)
Cartridge fatigue pressure (infinite life)	350 bar (5000 psi)
Rated flow	64 L/min (17 USgpm)
Internal leakage	250 cc/min (15in³/min) @ 350 bar (5000 psi)
Temperature range	-40°to 120°C(-40° to 248°F)
Manual operators	D- Lever (3-position detent)* D2 - Lever (2-position detent)* K - Knob (2-position, no detent)
Cavity	C-I6-3
Fluids	All general purpose hydraulic fluids such as: MIL-H -5606, SAE 10, SAE 20, etc.
Filtration	Cleanliness code 18/**16/13**
Standard housing materials	Aluminum or Steel
Weight cartridge only	0.53 kg (1.16 lbs)
Seal kit	889632 (Buna-N), 889636 (Viton®)

* Light duty housing only.
Viton is a registered trademark of E.I. DuPont

Sectional view

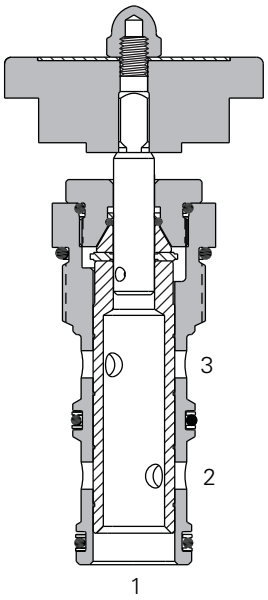

Pressure drop curves

Cartridge only

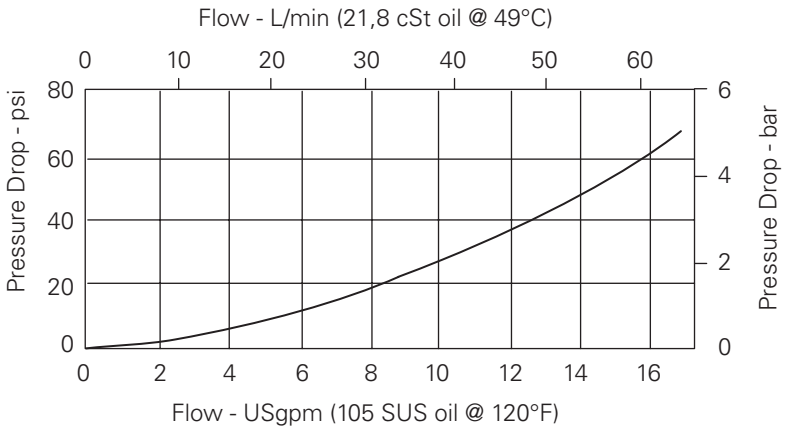

Description

This is a high pressure 3 way 2 or 3 position manual semi-rotary directional control valve. Can be used as a diverter or a dump valve.

Where measurements are critical request certified drawings. We reserve the right to change specifications without notice.

MRV13-16 - Manual rotary valve

Manual semi-rotary directional control valve
64 L/min (17 USgpm) • 350 bar (5000 psi)

Model code

MRV13 – 16 – (V) – ** – * – 00**

1 2 3 4 5 6

1 Function
MRV13 - Manual rotary valve

2 Size
16 - 16 size

3 Seals
Blank - Buna-N
V - Viton®

4 Manual operators
O - No operator
D - Lever (3-position detent)
D2 - Lever (2-position detent)
K - Knob (2-position, no detent)

5 Port size
0 - Cartridge only

Code	Port size	Housing number	
0		Aluminum Fatigue rated	Steel
A10H	SAE 10	876721	
A12H	SAE 12	876723	
A4G	1/2" BSPP	876720	
A6G	3/4" BSPP	876722	
S4G	1/2" BSPP		02-175131
S6T	3/4" BSPP		02-175132
S10T	SAE 10		02-175129
S12T	SAE 12		02-175130

6 Special features
00 - Non (Only required if valve has special features, omitted if "00")

Dimensions
mm (inch)

Torque cartridge in housing
A - 108-122 Nm (80-90 ft. lbs)
S - 136-149 Nm (100-110 ft. lbs)

Cartridge only

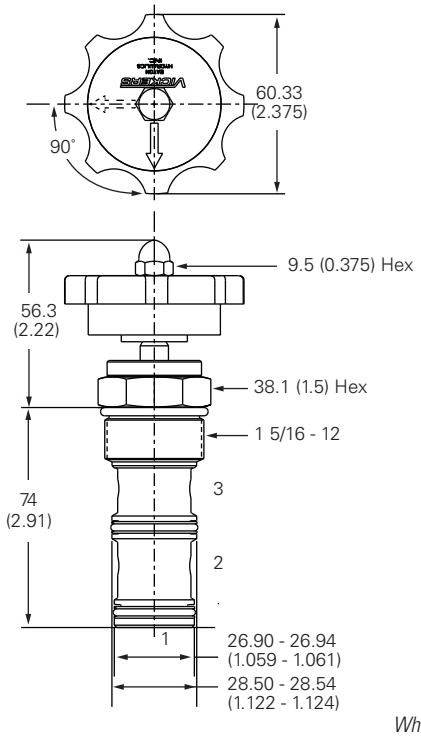

Installation drawing (steel)

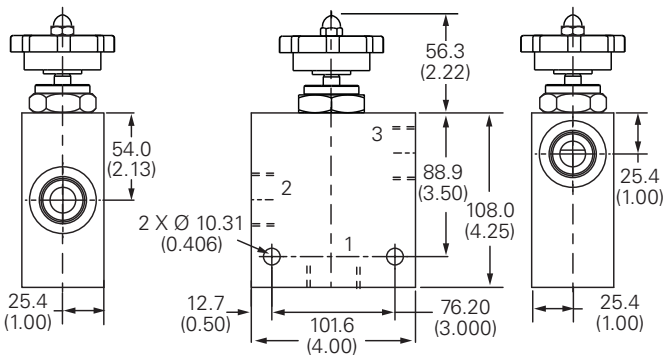

⚠ Warning

Aluminum housings can be used for pressures up to 210 bar (3000 psi). Steel housings must be used for operating pressures above 210 bar (3000 psi).

Where measurements are critical request certified drawings. We reserve the right to change specifications without notice.

MRV4-10 - Manual rotary valve

Manual semi-rotary directional control valve
11 L/min (3 USgpm) • 210 bar (3000 psi)

3 position models

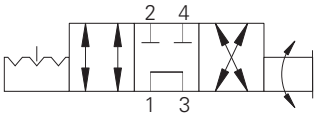

Operation

This valve will direct flow between ports 1 and 2 and ports 3 and 4 in one position.

By turning the operator 90°, flow will be directed between ports 1 and 4 and port 3 to port 2. During the cross-over transition, ports 2 and 4 are blocked and ports 1 and 3 are connected.

Features

Hardened, ground and honed working parts to limit leakage and prolong life. Various levers and knobs available with and without detent.

Sectional view

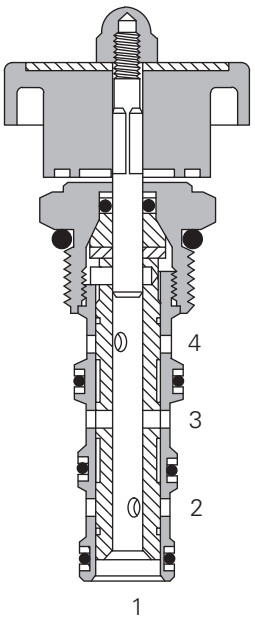

Performance data

Ratings and specifications

Performance data is typical with fluid at 21,8 cSt (105 SUS) and 49°C (120°F)	
Typical application pressure (all ports)	210 bar (3000 psi)
Cartridge fatigue pressure (infinite life)	210 bar (3000 psi)
Rated flow	11 L/min (3 US gpm)
Temperature range	-40°C to 120°C (-40° to 248°F)
Manual operators	D - Lever (3-position detent)* D2 - Lever (2-position detent)* E - Ball (3-position detent)* E2 - Ball (2-position detent)* K - Knob (2-position, no detent)
Cavity	C-10-4
Fluids	All general purpose hydraulic fluids such as: MIL-H-5606, SAE 10, SAE 20 etc.
Filtration	Cleanliness code 18/**16/13**
Standard housing material	Aluminum or Steel
Weight cartridge only	0,17 kg (0.38 lbs)
Seal kit	565805 (Buna-N), 889600 (Viton®)

* Light duty housing only.
Viton is a registered trademark of E.I. DuPont

Description

This is a 4 way 2 or 3 position manual semi-rotary directional control valve. In the center condition port 3 is open to port 1. Ports 4 and 2 are closed.

Pressure drop curves

Cartridge only

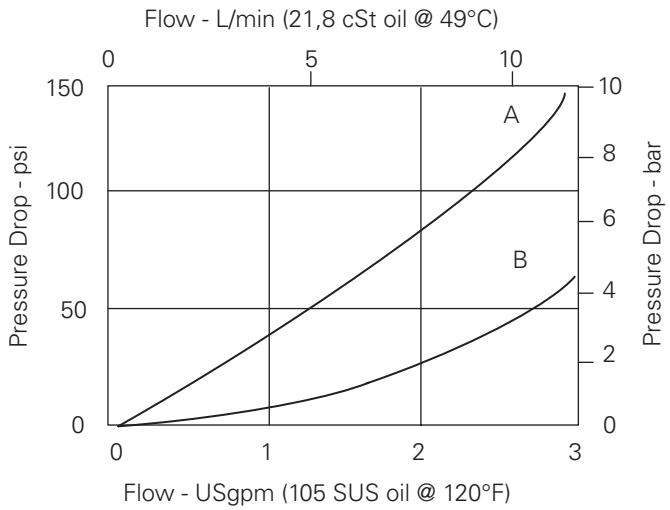

A - Port 3 to port 4 or 3 to 2

B - Port 4 to port 1 or 2 to 1

Where measurements are critical request certified drawings. We reserve the right to change specifications without notice.

MRV4-10 - Manual rotary valve

Manual semi-rotary directional control valve
11 L/min (3 USgpm) • 210 bar (3000 psi)

Model code

MRV4 – 10 – (V) – ** – * – 00**

1 2 3 4 5 6

1 Function

MRV4 - Manual rotary valve 4-way

2 Size

10 - 10 size

3 Seal material

Blank - Buna-N
V - Viton

4 Manual operator

O - No operator
D - Lever (3-position detent)
D2 - Lever (2-position detent)
E - Ball (3-position detent)
E2 - Ball (2-position detent)
K - Knob (2-position, no detent)

5 Port size

Code	Port size	Housing number		
		Aluminum Light duty	Aluminum Fatigue rated	Steel
0	Cartridge			
A3B	3/8" BSPP	02-179705		
A6T	SAE 6	566161		
A2G	1/4" BSPP		876709	
A3G	3/8" BSPP		876715	
A6H	SAE 6		876708	
A8H	SAE 8		876713	
S2G	1/4" BSPP			02-175139
S3G	3/8" BSPP			02-175140
S6T	SAE 6			02-175137
S8T	SAE 8			02-175138

See section J for housing details.

6 Special features

00 - None

(Only required if valve has special features, omitted if "00".)

SS - 316 stainless steel external components (only available for "0" and "F" options).

D

Dimensions

mm (inch)

Torque cartridge in aluminum housing 47-54 Nm (35-40 ft. lbs)

Cartridge only

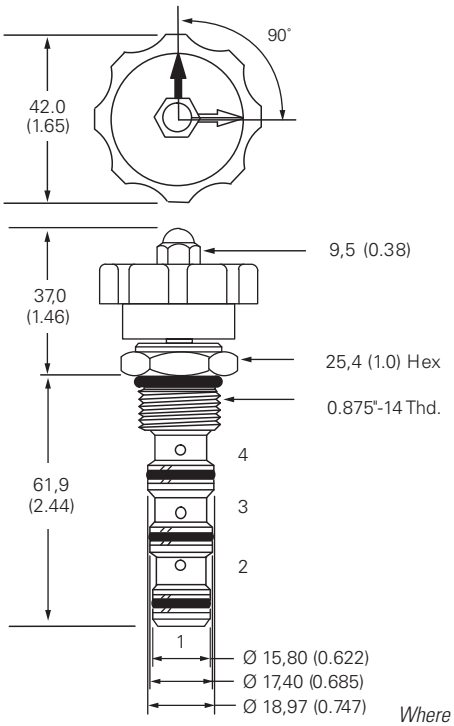

Installation drawing (aluminum)

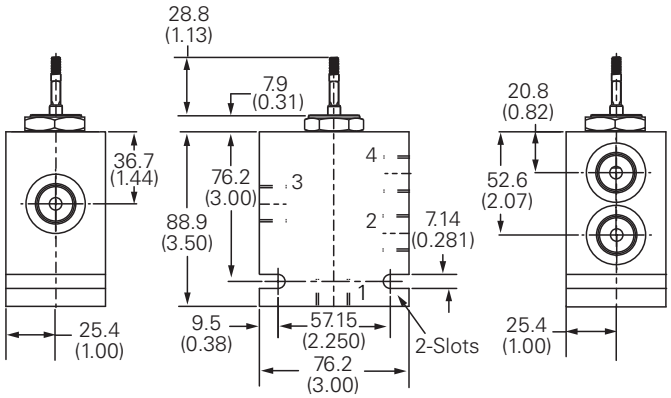

Where measurements are critical request certified drawings. We reserve the right to change specifications without notice.

MRV14-10 - Manual rotary valve

Manual semi-rotary directional control valve
11 L/min (3 USgpm) • 350 bar (5000 psi)

3 position models

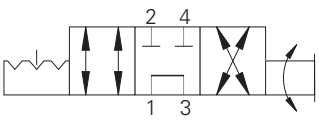

Operation

This valve will direct flow between ports 1 and 2 and ports 3 and 4 in one position.

By turning the operator 90°, flow will be directed between ports 1 and 4 and port 3 to port 2. During the cross-over transition, ports 2 and 4 are blocked and ports 1 and 3 are connected.

Features

Hardened, ground and honed working parts to limit leakage and prolong life. Various levers and knobs available with and without detent. Working pressure 350 bar.

Sectional view

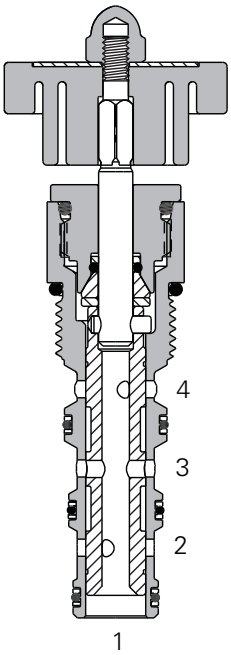

Description

This is a high pressure 4 way 2 or 3 position manual semi-rotary directional control valve. In the center condition port 3 is open to port 1. Ports 4 and 2 are closed.

Performance data

Ratings and specifications

Performance data is typical with fluid at 21,8 cSt (105 SUS) and 49°C (120°F)	
Typical application pressure (all ports)	350 bar (5000 psi)
Cartridge fatigue pressure (infinite life)	350 bar (5000 psi)
Rated flow	11 L/min (3 USgpm)
Internal leakage	300 cc/min (18in³/min) @ 350 bar (5000 psi)
Temperature range	-40°to 120°C(-40° to 248°F)
Manual operators	D- Lever (3-position detent)* D2 - Lever (2-position detent)* E - Ball (3-position detent)* E2 - Ball (2-position detent)* K - Knob (2-position, no detent)
Cavity	C-10-4
Fluids	All general purpose hydraulic fluids such as: MIL-H-5606, SAE 10, SAE 20, etc.
Filtration	Cleanliness code 18/**16/13**
Standard housing materials	Aluminum or Steel
Weight cartridge only	0.17 kg (0.38 lbs))
Seal kit	565805 (Buna-N), 889600 (Viton®)

* Light duty housing only.
Viton is a registered trademark of E.I. DuPont

Pressure drop curves

Cartridge only

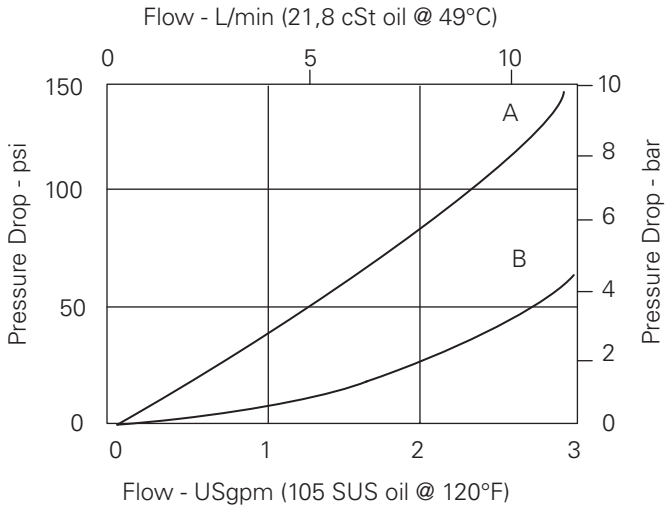

A - Port 3 to port 4 or 3 to 2

B - Port 4 to port 1 or 2 to 1

Where measurements are critical request certified drawings. We reserve the right to change specifications without notice.

MRV14-10 - Manual rotary valve

Manual semi-rotary directional control valve
11 L/min (3 USgpm) • 350 bar (5000 psi)

Model code

MRV14 – 10 – (V) – ** – * – 00**

1 2 3 4 5 6

1 Function

MRV14 - Manual rotary valve 4-way

2 Size

10 - 10 size

3 Seals

Blank - Buna-N
V - Viton®

4 Manual operator

0 - No operator
D - Lever (3-position detent)
D2 -Lever (2-position detent)
E - Ball (3-position detent)
E2 -Ball (2-position detent)
K - Knob (2-position, no detent)

5 Port size

0 - Cartridge only

Code	Port size	Housing number		
0		**Aluminum light duty**	**Aluminum fatigue rated**	**Steel**
A3B	3/8" BSPP	02-179705		
A6T	SAE 6	566161		
A2G	1/4" BSPP		876709	
A3G	3/8" BSPP		876715	
A6H	SAE 6		876708	
A8H	SAE 8		876713	
AZG	1/4" BSPP			02-175139
A3G	3/8" BSPP			02-175140
S6T	SAE 6			02-175137
S8T	SAE 8			02-175138

See section J for housing details.

6 Special features

00 - Non (Only required if valve has special features, omitted if "00")

Dimensions

mm (inch)

Torque cartridge in housing
A - 47-54 Nm (35-40 ft. lbs)
S - 68-75 Nm (50-55 ft. lbs)

Cartridge only

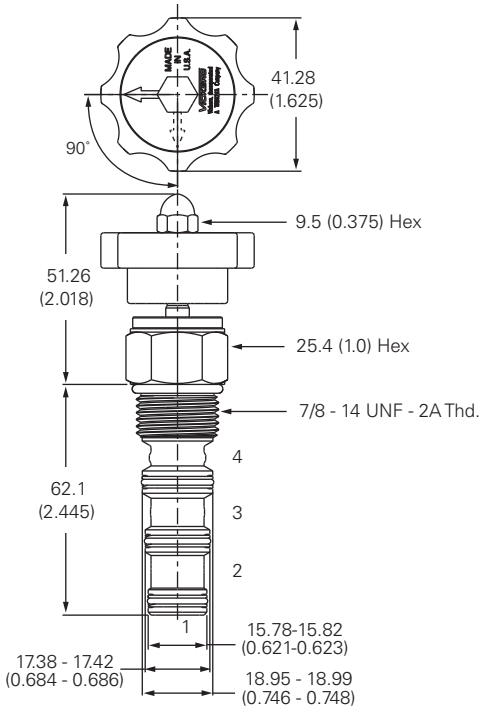

Installation drawing (steel)

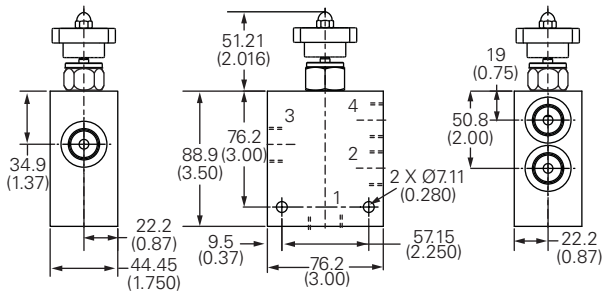

⚠ Warning

Aluminum housings can be used for pressures up to 210 bar (3000 psi). Steel housings must be used for operating pressures above 210 bar (3000 psi).

Where measurements are critical request certified drawings. We reserve the right to change specifications without notice.

MRV14-12 - Manual rotary valve

Manual semi-rotary directional control valve
23 L/min (6 USgpm) • 350 bar (5000 psi)

3 position models

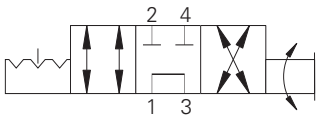

Operation

This valve will direct flow between ports 1 and 2 and ports 3 and 4 in one position.

By turning the operator 90°, flow will be directed between ports 1 and 4 and port 3 to port 2. During the cross-over transition, ports 2 and 4 are blocked and ports 1 and 3 are connected.

Features

Hardened, ground and honed working parts to limit leakage and prolong life. Various levers and knobs available with and without detent. Working pressure 350 bar.

Sectional view

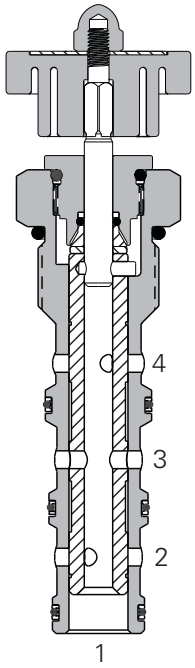

Description

This is a high pressure 4 way 2 or 3 position manual semi-rotary directional control valve. In the center condition port 3 is open to port 1. Ports 4 and 2 are closed.

Performance data

Ratings and specifications

Performance data is typical with fluid at 21,8 cSt (105 SUS) and 49°C (120°F)	
Typical application pressure (all ports)	350 bar (5000 psi)
Cartridge fatigue pressure (infinite life)	350 bar (5000 psi)
Rated flow	23 L/min (6 USgpm)
Internal leakage	300 cc/min (18in³/min) @ 350 bar (5000 psi)
Temperature range	-40°to 120°C(-40° to 248°F)
Manual operators	D- Lever (3-position detent)* D2 - Lever (2-position detent)* E - Ball (3-position detent)* E2 - Ball (2-position detent)* K - Knob (2-position, no detent)
Cavity	C-I2-4
Fluids	All general purpose hydraulic fluids such as: MIL-H-5606, SAE 10, SAE 20, etc.
Filtration	Cleanliness code 18/**16/13**
Standard housing materials	Aluminum or Steel
Weight cartridge only	0.45 kg (0.99 lbs)
Seal kit	02-160979 (Buna-N), 02-160980 (Viton®)

* Light duty housing only.
Viton is a registered trademark of E.I. DuPont

Pressure drop curves

Cartridge only

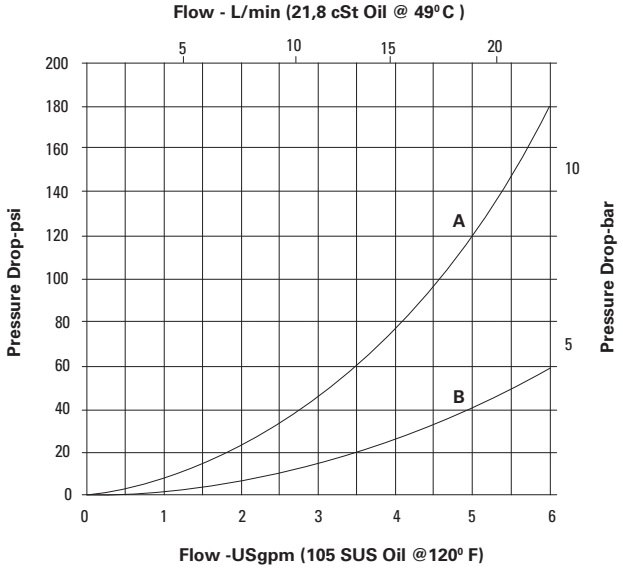

A - Port 3 to port 4 or 3 to 2

B - Port 4 to port 1 or 2 to 1

Where measurements are critical request certified drawings. We reserve the right to change specifications without notice.

MRV14-12 - Manual rotary valve

Manual semi-rotary directional control valve
23 L/min (6 USgpm) • 350 bar (5000 psi)

Model code

MRV14 – 12 – (V) – ** – * – 00**

1 2 3 4 5 6

1 Function

MRV14 - Manual rotary valve 4-way

2 Size

12 - 12 size

3 Seals

Blank - Buna-N
V - Viton®

4 Manual operator

O - No operator
D - Lever (3-position detent)
D2 - Lever (2-position detent)
E - Ball (3-position detent)
E2 - Ball (2-position detent)
K - Knob (2-position, no detent)

5 Port size

0 - Cartridge only

Code	Port size	Housing number	
0		Aluminum Fatigue rated	Steel
A4G	1/2" BSPP	5986431-001	
A6G	3/4" BSPP	5986432-001	
A8H	SAE 8	5986433-001	
A10H	3/8" BSPP	5986434-001	
A12H	SAE 12	5986436-001	
S6G	3/4" BSPP		5991073-001
S10H	SAE 10		5991074-001
S12H	SAE 12		5991075-001

See section J for housing details.

6 Special features

00 - Non

(Only required if valve has special features, omitted if "00").

D

Dimensions

mm (inch)

Cartridge only

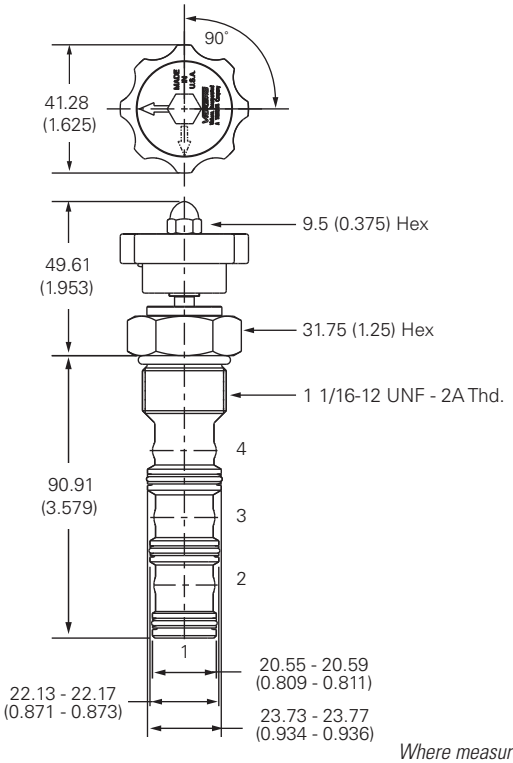

Torque cartridge in housing
A - 81-95 Nm (60-70 ft. lbs)
B - 102-115 Nm (75-85 ft. lbs)

Installation drawing (steel)

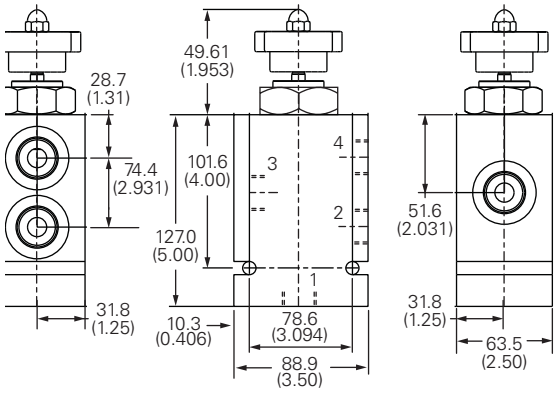

⚠ Warning

Aluminum housings can be used for pressures up to 210 bar (3000 psi). Steel housings must be used for operating pressures above 210 bar (3000 psi).

Where measurements are critical request certified drawings. We reserve the right to change specifications without notice.

MRV4-16 - Manual rotary valve

Manual semi-rotary directional control valve
45 L/min (12 USgpm) • 210 bar (3000 psi)

3 position models

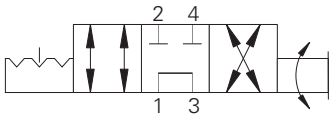

Operation

This valve will direct flow between ports 1 and 2 and ports 3 and 4 in one position.

By turning the operator 90°, flow will be directed between ports 1 and 4 and port 3 to port 2. During the cross-over transition, ports 2 and 4 are blocked and ports 1 and 3 are connected.

Features

Hardened, ground and honed working parts to limit leakage and prolong life. Various levers and knobs available with and without detent.

Sectional view

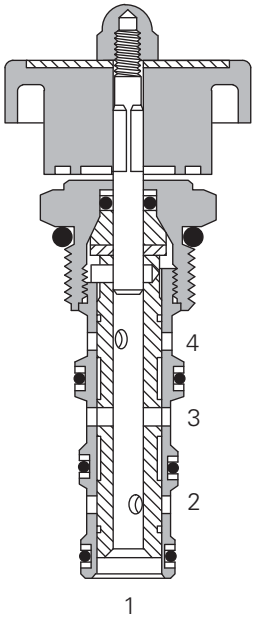

Description

This is a 4 way 2 or 3 position manual semi-rotary directional control valve. In the center condition all ports are closed.

Performance data

Ratings and specifications

Performance data is typical with fluid at 21,8 cSt (105 SUS) and 49°C (120°F)	
Typical application pressure (all ports)	210 bar (3000 psi)
Cartridge fatigue pressure (infinite life)	210 bar (3000 psi)
Rated flow	45 L/min (12 USgpm)
Temperature range	-40°C to 120°C (-40° to 248°F)
Manual operators	D - Lever (3-position detent)* D2 - Lever (2-position detent)* K - Knob (2-position, no detent)
Cavity	C-16-4
Fluids	All general purpose hydraulic fluids such as: MIL-H-5606, SAE 10, SAE 20 etc.
Filtration	Cleanliness code 18/**16/13**
Standard housing material	Aluminum or Steel
Weight cartridge only	0,65 kg (1.43 lbs)
Seal kit	889634 (Buna-N), 889638 (Viton®)

* Light duty housing only.
Viton is a registered trademark of E.I. DuPont

Pressure drop curves

Cartridge only

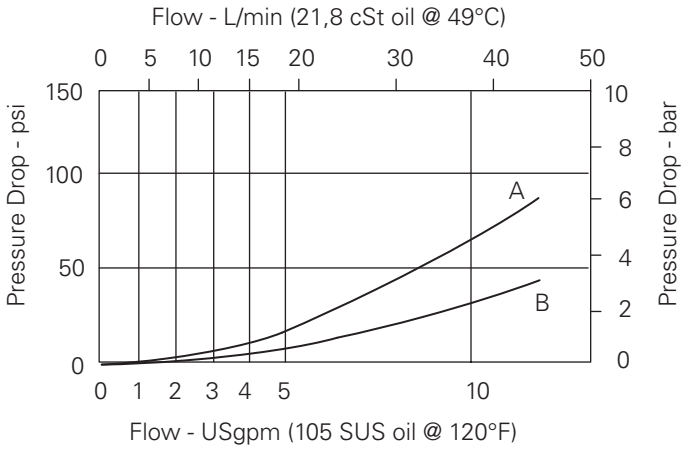

A - Port 3 to port 4 or 3 to 2

B - Port 4 to port 1 or 2 to 1

Where measurements are critical request certified drawings. We reserve the right to change specifications without notice.

MRV4-16 - Manual rotary valve

Manual semi-rotary directional control valve
45 L/min (12 USgpm) • 210 bar (3000 psi)

Model code

MRV4 – 16 – (V) – ** – ** – 00**

1 2 3 4 5 6

1 Function

MRV4 - Manual rotary valve 4-way

2 Size

16 - 16 size

3 Seal material

Blank - Buna-N
V - Viton

4 Manual operator

O - No operator
D - Level (3-position detent)
D2 - Level (2-position detent)
K - Knob (2-position, no detent)

5 Port size

Code	Port size	Housing number		
		Aluminum light duty	Aluminum fatigue rated	Steel
0	Cartridge			
A12T	SAE 12	566411	–	–
A6B	3/4" BSPP	02-175468	–	–
A10H	SAE 10	–	876729	–
A12H	SAE 12	–	876731	–
A4G	1/2" BSPP	–	876728	–
A6G	3/4" BSPP	–	876730	–
S4G	1/2" BSPP	–	–	02-175143
S6G	3/4" BSPP	–	–	02-175144
S10T	SAE 10	–	–	02-175141
S12T	SAE 12	–	–	02-175142

See section J for housing details.

6 Special features

00 - Non (Only required if valve has special features, omitted if "00".)

Dimensions

mm (inch)

Cartridge only

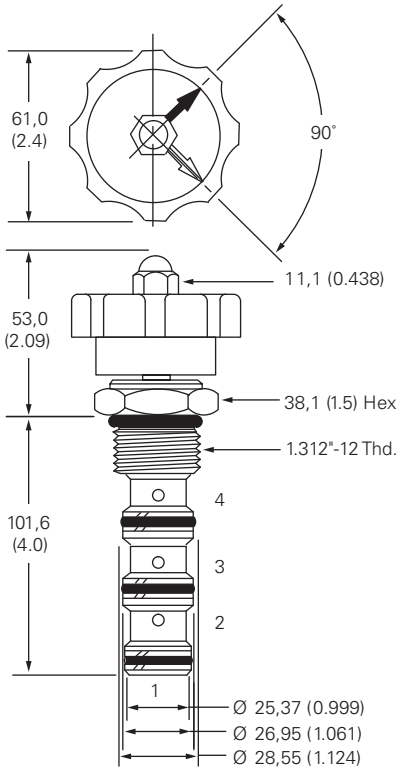

Torque cartridge in aluminum housing 108-122 Nm (80-90 ft lbs)

Installation drawing (aluminum)

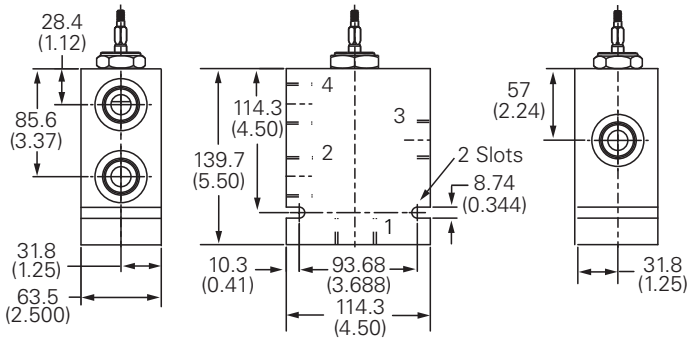

Where measurements are critical request certified drawings. We reserve the right to change specifications without notice.

MRV14-16 - Manual rotary valve

Manual semi-rotary directional control valve
45 L/min (12 USgpm) • 350 bar (5000 psi)

3 position models

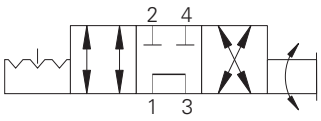

Operation

This valve will direct flow between ports 1 and 2 and ports 3 and 4 in one position.

By turning the operator 90°, flow will be directed between ports 1 and 4 and port 3 to port 2. During the cross-over transition, ports 2 and 4 are blocked and ports 1 and 3 are connected.

Features

Hardened, ground and honed working parts to limit leakage and prolong life. Various levers and knobs available with and without detent. Working pressure 350 bar.

Sectional view

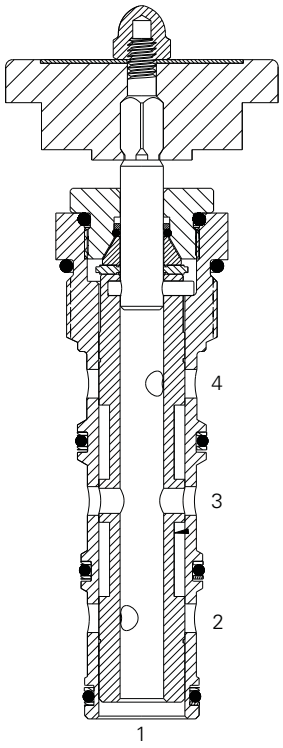

Description

This is a high pressure 4 way 2 or 3 position manual semi-rotary directional control valve. In the center condition all ports are closed.

Performance data

Ratings and specifications

Performance data is typical with fluid at 21,8 cSt (105 SUS) and 49°C (120°F)	
Typical application pressure (all ports)	350 bar (5000 psi)
Cartridge fatigue pressure (infinite life)	350 bar (5000 psi)
Rated flow	45 L/min (12 USgpm)
Internal leakage	300 cc/min (18in³/min) @ 350 bar (5000 psi)
Temperature range	-40°to 120°C (-40° to 248°F)
Manual operators	D- Lever (3-position detent)* D2 - Lever (2-position detent)* K - Knob (2-position, no detent)
Cavity	C-16-4
Fluids	All general purpose hydraulic fluids such as: MIL-H-5606, SAE 10, SAE 20, etc.
Filtration	Cleanliness code 18/**16/13**
Standard housing materials	Aluminum or Steel
Weight cartridge only	0.65 kg (1.43 lbs))
Seal kit	889634 (Buna-N), 889638 (Viton®)

* Light duty housing only.
Viton is a registered trademark of E.I. DuPont

Pressure drop curves

Cartridge only

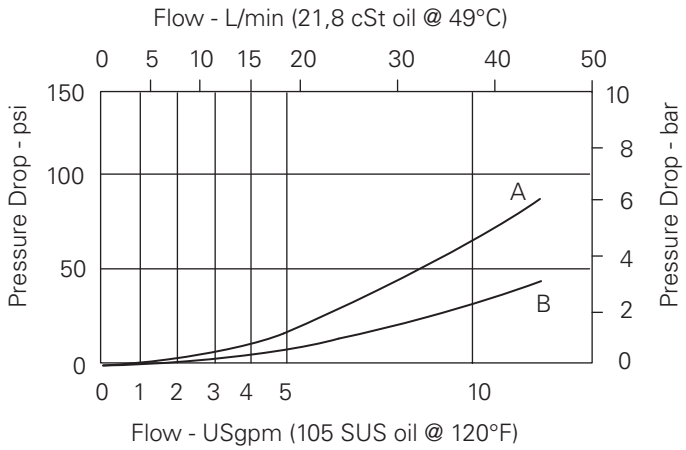

A - Port 3 to port 4 or 3 to 2

B - Port 4 to port 1 or 2 to 1

Where measurements are critical request certified drawings. We reserve the right to change specifications without notice.

MRV14-16 - Manual rotary valve

Manual semi-rotary directional control valve
45 L/min (12 USgpm) • 350 bar (5000 psi)

Model code

MRV14 – 16 – (V) – ** – ** – 00**

1 2 3 4 5 6

1 Function

MRV14 - Manual rotary valve 4-way

2 Size

16 - 16 size

3 Seals

Blank - Buna-N
V - Viton®

4 Manual operators

0 - No operator
D - Lever (3-position detent)
D2 - Lever (2-position detent)
K - Knob (2-position, no detent)

5 Port size

0 - Cartridge only

Code	Port size	Housing number		
0		**Aluminum light duty**	**Aluminum fatigue rated**	**Steel**
A12T	SAE 12	566411		
A6B	3/4" BSPP	02-175468		
A10H	SAE 10		876729	
A12H	SAE 12		876731	
A4G	1/2" BSPP		876728	
A6G	3/4" BSPP		876730	
S4G	1/2" SSPP			02-175143
S6G	3/4" BSPP			02-175144
S10T	SAE 10			02-175141
S12T	SAE 12			02-175142

See section J for housing details.

6 Special features

00 - Non

(Only required if valve has special features, omitted if "00")

Dimensions

mm (inch)

Cartridge only

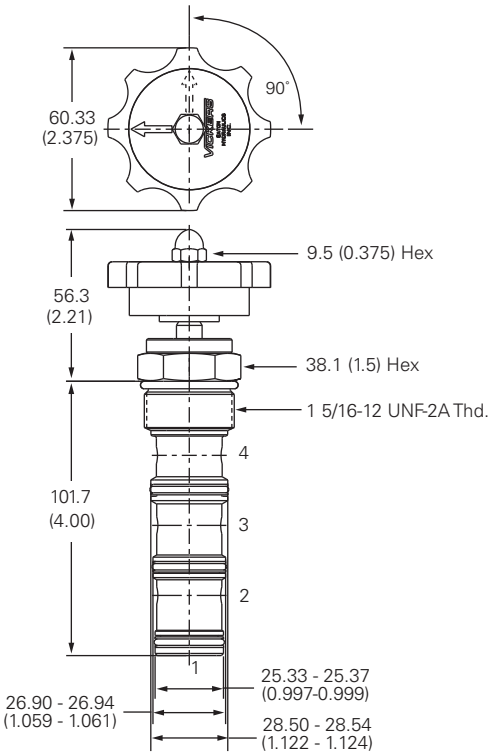

Torque cartridge in housing
A - 108-122 Nm (80-90 ft. lbs)
S - 136-149 Nm (100-110 ft. lbs)

Installation drawing (steel)

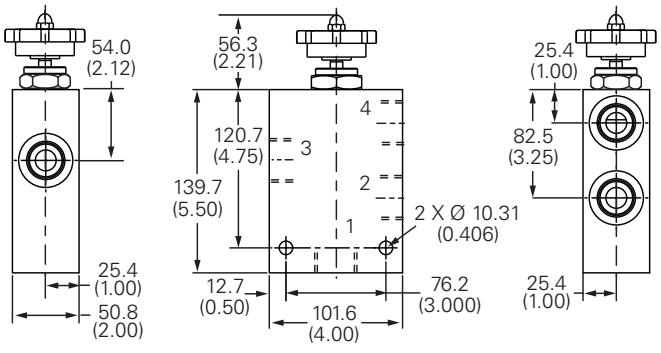

⚠ Warning

Aluminum housings can be used for pressures up to 210 bar (3000 psi). Steel housings must be used for operating pressures above 210 bar (3000 psi).

Where measurements are critical request certified drawings. We reserve the right to change specifications without notice.

MRV5-10 - Manual rotary valve

Manual semi-rotary directional control valve
11 L/min (3 USgpm) • 210 bar (3000 psi)

3 position models

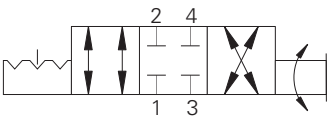

Operation

This valve will direct flow between ports 1 and 2 and ports 3 and 4 in one position.

By turning the operator 90°, flow will be directed between ports 1 and 4 and port 3 and 2. During the cross-over transition, all ports are blocked.

Features

Hardened, ground and honed working parts to limit leakage and prolong life. Various levers and knobs available with and without detent.

Sectional view

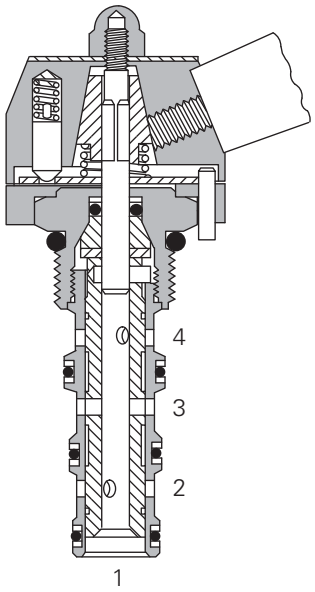

Description

This is a 4 way 2 or 3 position manual semi-rotary directional control valve. In the center condition all ports closed.

Performance data

Ratings and specifications

Performance data is typical with fluid at 21,8 cSt (105 SUS) and 49°C (120°F)	
Typical application pressure (all ports)	210 bar (3000 psi)
Cartridge fatigue pressure (infinite life)	210 bar (3000 psi)
Rated flow	11 L/min (3 USgpm)
Temperature range	-40°C to 120°C (-40° to 248°F)
Manual operators	D - Lever (3-position detent) E - Ball (3-position detent)
Cavity	C-10-4
Fluids	All general purpose hydraulic fluids such as: MIL-H-5606, SAE 10, SAE 20 etc.
Filtration	Cleanliness code 18/**16/13**
Standard housing material	Aluminum or Steel
Weight cartridge only	0,27 kg (0.59 lbs)
Seal kit	889625 (Buna-N), 566080 (Viton®)

* Light duty housing only.
Viton is a registered trademark of E.I. DuPont

Pressure drop curves

Cartridge only

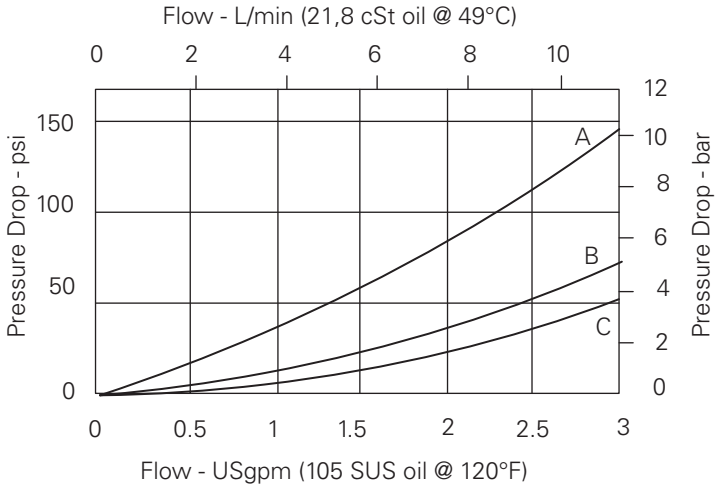

A - Port 3 to 4 or 3 to 2

B - Port 4 to 1

C - Port 2 to 1

Where measurements are critical request certified drawings. We reserve the right to change specifications without notice.

MRV5-10 - Manual rotary valve

Manual semi-rotary directional control valve
11 L/min (3 USgpm) • 210 bar (3000 psi)

Model code

MRV5 – 10 – (V) – ** – * – 00**

1 2 3 4 5 6

1 Function

MRV5 - Manual rotary valve 4-way

2 Size

10 - 10 size

3 Seal material

Blank - Buna-N
V - Viton

4 Manual operator

O - No operator
D - Level (3-position detent)
D2 - Level (2-position detent)
E - Ball (3-position detent)
E2 - Ball (2-position detent)
K - Knob (2-position, no detent)

5 Port size

Code	Port size	Housing number		
		Aluminum light duty	Aluminum fatigue rated	Steel
0	Cartridge			
A3B	3/8" BSPP	02-179705	–	–
A6T	SAE 6	566161	–	–
A2G	1/4" BSPP	–	876709	–
A3G	3/8" BSPP	–	876715	–
A6H	SAE 6	–	876708	–
A8H	SAE 8	–	876713	–
S2G	1/4" BSPP	–	–	02-175139
S3G	3/8" BSPP	–	–	02-175140
S6T	SAE 6	–	–	02-175137
S8T	SAE 8	–	–	02-175138

See section J for housing details.

6 Special features

00 - Non

(Only required if valve has special features, omitted if "00").

Dimensions

mm (inch)

Torque cartridge in aluminum housing 47-54 Nm (35-40 ft lbs)

Cartridge only

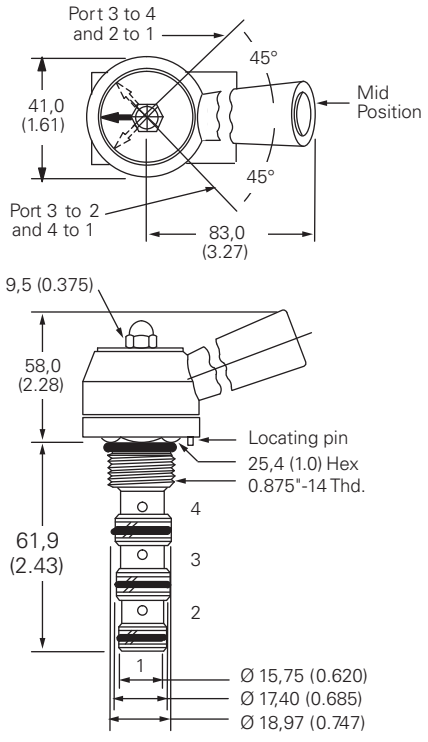

Installation drawing (aluminum)

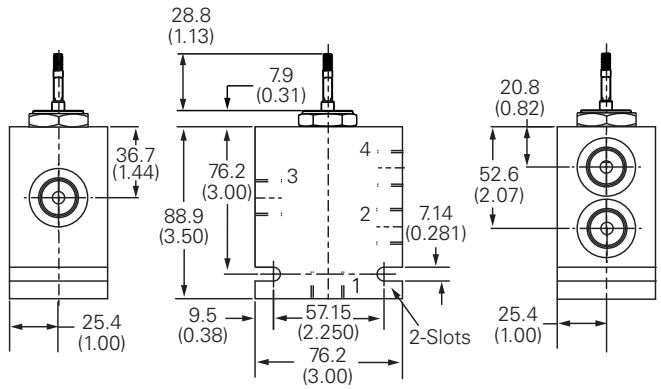

Where measurements are critical request certified drawings. We reserve the right to change specifications without notice.

D

MRV15-10 - Manual rotary valve

Manual semi-rotary directional control valve
11 L/min (3 USgpm) • 350 bar (5000 psi)

3 position models

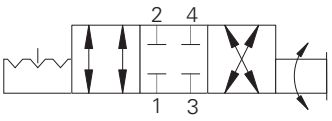

Operation

This valve will direct flow between ports 1 and 2 and ports 3 and 4 in one position.

By turning the operator 90°, flow will be directed between ports 1 and 4 and port 3 and 2. During the cross-over transition, all ports are blocked.

Features

Hardened, ground and honed working parts to limit leakage and prolong life. Various levers and knobs available with and without detent. Working pressure 350 bar.

Sectional view

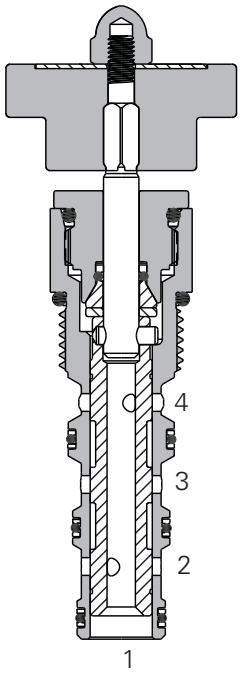

Description

This is a high pressure 4 way 2 or 3 position manual semi-rotary directional control valve. In the center condition all ports are closed.

Performance data

Ratings and specifications

Performance data is typical with fluid at 21,8 cSt (105 SUS) and 49°C (120°F)	
Typical application pressure (all ports)	350 bar (5000 psi)
Cartridge fatigue pressure (infinite life)	350 bar (5000 psi)
Rated flow	11 L/min (3 USgpm)
Internal leakage	300 cc/min (18in³/min) @ 350 bar (5000 psi)
Temperature range	-40° to 120°C (-40° to 248°F)
Manual operators	D- Lever (3-position detent)* D2- Lever (2 position detent)* E - Ball (3-position detent)* E2- Ball (3-position detent)* K - Knob (2 position, no detent) * Light duty housing only.
Cavity	C-10-4
Fluids	All general purpose hydraulic fluids such as: MIL-H-5606, SAE 10, SAE 20, etc.
Filtration	Cleanliness code 18/**16/13**
Standard housing materials	Aluminum or Steel
Weight cartridge only	0.27 kg (0.59 lbs))
Seal kit	565805 (Buna-N), 889600 (Viton®)

* Light duty housing only.
Viton is a registered trademark of E.I. DuPont

Pressure drop curves

Cartridge only

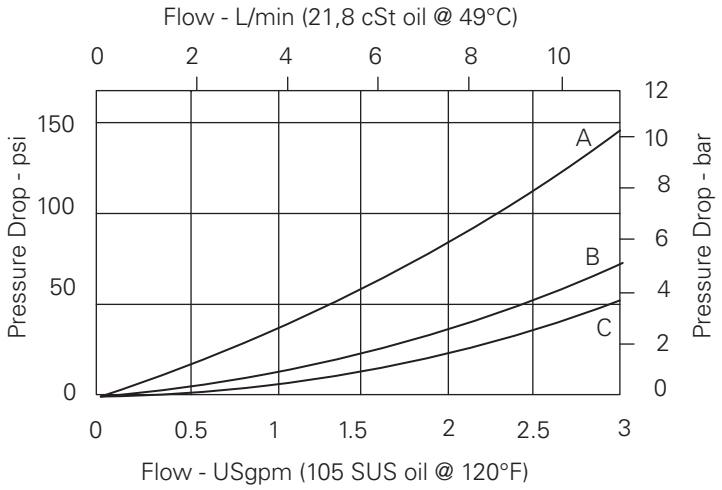

A - Port 3 to 4 or 3 to 2

B - Port 4 to 1

C - Port 2 to 1

Where measurements are critical request certified drawings. We reserve the right to change specifications without notice.

MRV15-10 - Manual rotary valve

Manual semi-rotary directional control valve
11 L/min (3 USgpm) • 350 bar (5000 psi)

Model code

MRV15 – 10 – (V) – ** – ** – 00**

1 2 3 4 5 6

1 Function
MRV15 - Manual rotary valve 4-way

2 Size
10 - 10 size

3 Seals
Blank - Buna-N
V - Viton®

4 Manual operator
0 - No operator
D - Lever (3-position detent)
D2 - Lever (2-position detent)
E2 - Ball (2-position detent)
K - Knob (2-position, no detent)

5 Port size
0 - Cartridge only

6 Special features
00 - Non
(Only required if valve has special features, omitted if "00").

Code	Port size	Housing number		
0		Aluminum light duty	Aluminum fatigue rated	Steel
A3B	3/8" BSPP	02-179705		
A6T	SAE 6	566161		
A2G	1/4" BSPP		02-185804	
A3G	3/8" BSPP		02-185805	
A6H	SAE 6		02-185802	
A8H	SAE 8		02-185803	
S2G	1/4" SSPP			02-175139
S3G	3/8" BSPP			02-175140
S6T	SAE 6			02-175137
S8T	SAE 8			02-175138

See section J for housing details.

Torque cartridge in housing
A - 47-54 Nm (35-40 ft. lbs)
S - 68-75 Nm (50-55 ft. lbs)

Dimensions
mm (inch)

Cartridge only

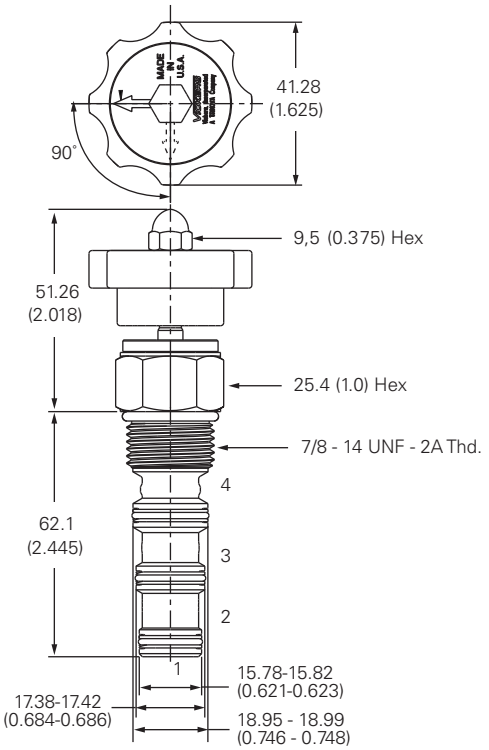

Installation drawing (steel)

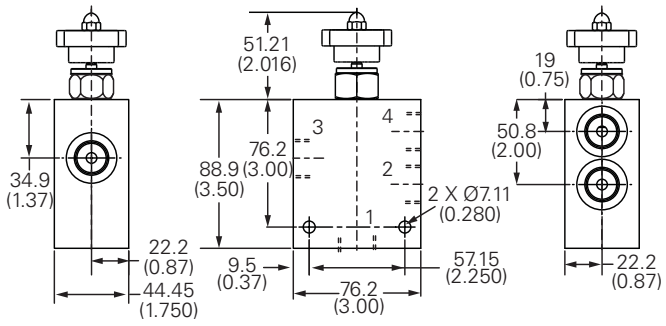

⚠ Warning
Aluminum housings can be used for pressures up to 210 bar (3000 psi). Steel housings must be used for operating pressures above 210 bar (3000 psi).

Where measurements are critical request certified drawings. We reserve the right to change specifications without notice.

MRV15-12 - Manual rotary valve

Manual semi-rotary directional control valve
23 L/min (6 USgpm) • 350 bar (5000 psi)

3 position models

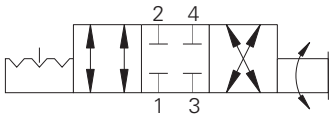

Operation

This valve will direct flow between ports 1 and 2 and ports 3 and 4 in one position.

By turning the operator 90°, flow will be directed between ports 1 and 4 and port 3 and 2. During the cross-over transition, all ports are blocked.

Features

Hardened, ground and honed working parts to limit leakage and prolong life. Various levers and knobs available with and without detent. Working pressure 350 bar.

Sectional view

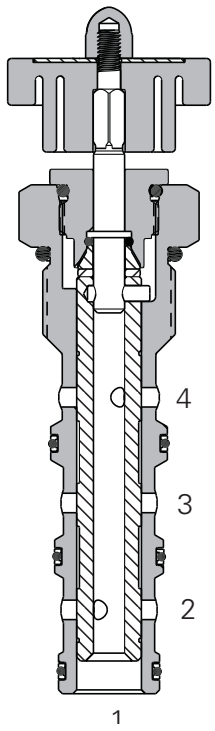

Description

This is a 4 way 2 or 3 position manual semi-rotary directional control valve. In the center condition all ports are closed.

Performance data

Ratings and specifications

Performance data is typical with fluid at 21,8 cSt (105 SUS) and 49°C (120°F)	
Typical application pressure (all ports)	350 bar (5000 psi)
Cartridge fatigue pressure (infinite life)	350 bar (5000 psi)
Rated flow	23 L/min (6 USgpm)
Internal leakage	300 cc/min (18in³/min) @ 350 bar (5000 psi)
Temperature range	-40° to 120°C (-40° to 248°F)
Manual operators	D- Lever (3-position detent) E - Ball (3-position detent)
Cavity	C-I2-4
Fluids	All general purpose hydraulic fluids such as: MIL-H-5606, SAE 10, SAE 20, etc.
Filtration	Cleanliness code 18/**16/13**
Standard housing materials	Aluminum or Steel
Weight cartridge only	0.45 kg (0.99 lbs))
Seal kit	02-160979 (Buna-N), 02-160980 (Viton®)

* Light duty housing only.
Viton is a registered trademark of E.I. DuPont

Pressure drop curves

Cartridge only

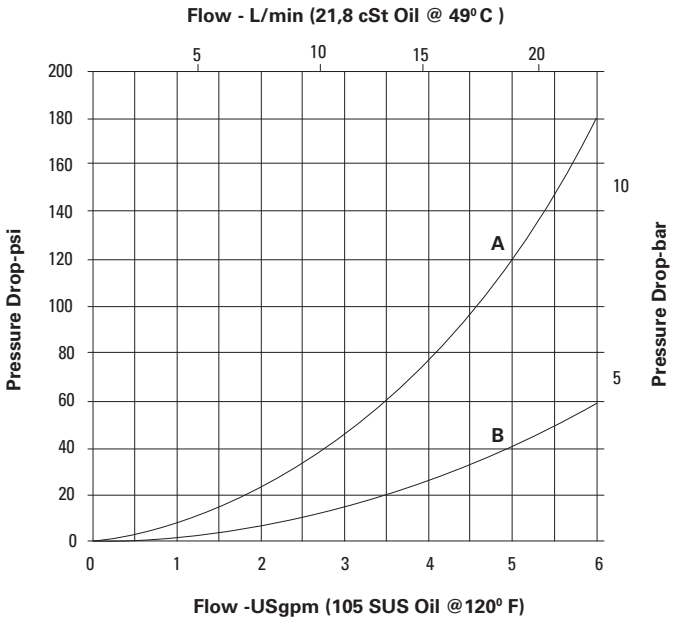

A - Port 3-4 and port 3-2

B - Port 2-1 and port 4-1

Where measurements are critical request certified drawings. We reserve the right to change specifications without notice.

MRV15-12 - Manual rotary valve

Manual semi-rotary directional control valve
23 L/min (6 USgpm) • 350 bar (5000 psi)

Model code

MRV15 – 12 – (V) – ** – ** – 00**

1 2 3 4 5 6

1 Function

MRV15 - Manual rotary valve 4-way

2 Size

12 - 12 size

3 Seals

Blank - Buna-N
V - Viton®

4 Manual operators

0 - No operator
D - Lever (3-position detent)
E - Ball (3-position detent)
D2 - Lever (2-position detent)
E2 - Ball (2-position detent)
K - Knob (2-position, no detent)

5 Port size

0 - Cartridge only

6 Special features

00 - Non

(Only required if valve has special features, omitted if "00").

Code	Port size	Housing number	
0		**Aluminum light-duty**	**Steel**
A4G	1/2" BSPP	5986431-001	
A6G	3/4" BSPP	5986432-001	
A8H	SAE 8	5986433-001	
A10H	SAE 10	5986434-001	
A12H	SAE 12	5986436-001	
S6G	3/4" BSPP		5991073-001
S10H	SAE 10		5991074-001
S12H	SAE 12		5991075-001

See section J for housing details.

Dimensions

mm (inch)

Torque cartridge in housing

A - 81-95 Nm (60-70 ft. lbs)

S - 102-115 Nm (75-85 ft. lbs)

Cartridge only

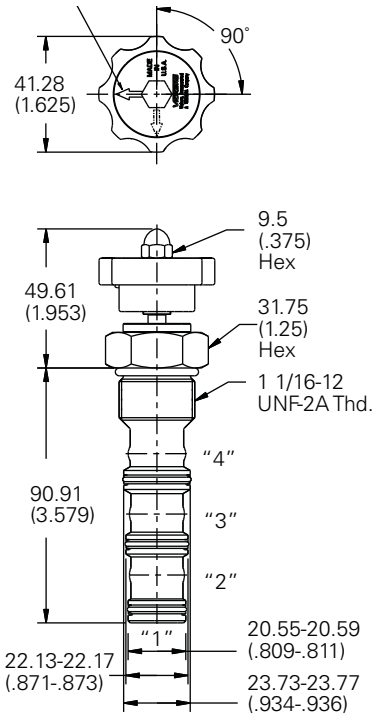

Installation drawing (steel)

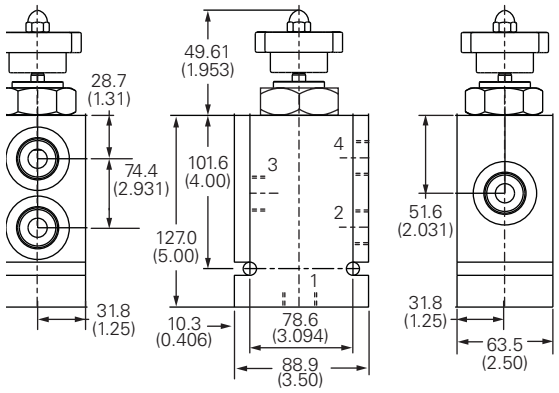

⚠ Warning

Aluminum housings can be used for pressures up to 210 bar (3000 psi). Steel housings must be used for operating pressures above 210 bar (3000 psi).

Where measurements are critical request certified drawings. We reserve the right to change specifications without notice.

MRV5-16 - Manual rotary valve

Manual semi-rotary directional control valve
45 L/min (12 USgpm) • 210 bar (3000 psi)

3 position models

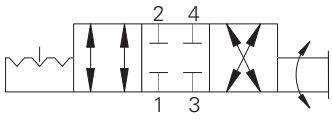

Operation

This valve will direct flow between ports 1 and 2 and ports 3 and 4 in one position.

By turning the operator 90°, flow will be directed between ports 1 and 4 and port 3 and 2. During the cross-over transition, all ports are blocked.

Features

Hardened, ground and honed working parts to limit leakage and prolong life. Various levers and knobs available with and without detent.

Sectional view

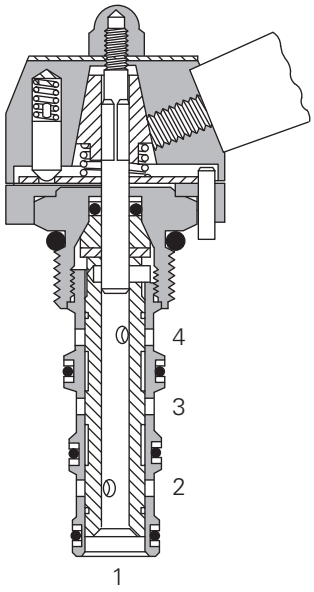

Performance data

Ratings and specifications

Performance data is typical with fluid at 21,8 cSt (105 SUS) and 49°C (120°F)	
Typical application pressure (all ports)	210 bar (3000 psi)
Cartridge fatigue pressure (infinite life)	210 bar (3000 psi)
Rated flow	45 L/min (12 USgpm)
Internal leakage	
Temperature range	-40°C to 120°C (-40° to 248°F)
Manual operators	D - Lever (3-position detent)*
Cavity	C-16-4
Fluids	All general purpose hydraulic fluids such as: MIL-H-5606, SAE 10, SAE 20 etc.
Filtration	Cleanliness code 18/**16/13**
Standard housing material	Aluminum or Steel
Weight cartridge only	0,65 kg (1.43 lbs)
Seal kit	889634 (Buna-N), 889638 (Viton®)

Viton is a registered trademark of E.I. DuPont
* Light duty housing only.

Description

This is a 4 way 2 or 3 position manual semi-rotary directional control valve. In the center condition all ports are closed.

Pressure drop curves

Cartridge only

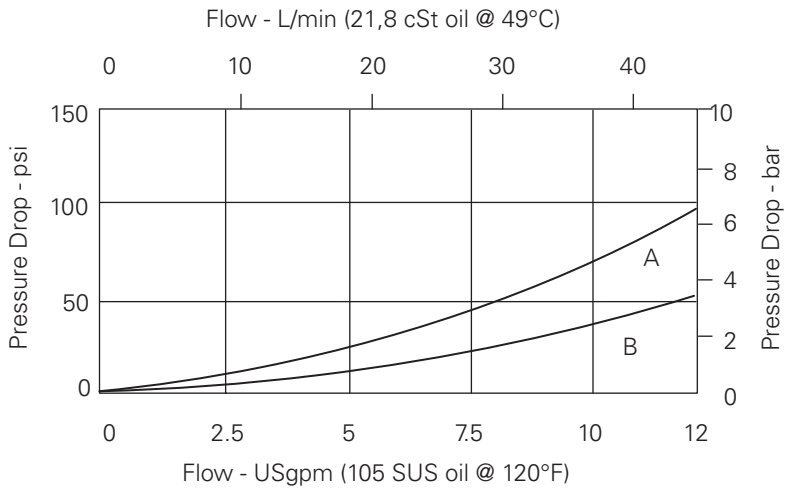

A - Port 3 to 4 or 3 to 2

B - Port 4 to 1 or 2 to 1

Where measurements are critical request certified drawings. We reserve the right to change specifications without notice.

MRV5-16 - Manual rotary valve

Manual semi-rotary directional control valve
45 L/min (12 USgpm) • 210 bar (3000 psi)

Model code

MRV5 – 16 – (V) – ** – ** – 00**

1 2 3 4 5 6

1 Function

MRV15 - Manual rotary valve 4-way

2 Size

16 - 16 size

3 Seal material

Blank - Buna-N
V - Viton

4 Manual operator

O - No operator
D - Level (3-position detent)

5 Port size

Code	Port size	Housing number	
Fatigue rated		**Aluminum**	**Aluminum light duty**
0	Cartridge		
A12T	SAE 12	566411	–
A6B	3/4" BSPP	02-175468	–
A10H 876729	SAE 10	–	
A12H 876731	SAE 12	–	
A4G	1/2" BSPP	–	876728
A6G	3/4" BSPP	–	876730

See section J for housing details.

6 Special features

00 - None

(Only required if valve has special features, omitted if "00".)

D

Dimensions

mm (inch)

Torque cartridge in aluminum housing 108-122 Nm (80-90 ft lbs)

Cartridge only

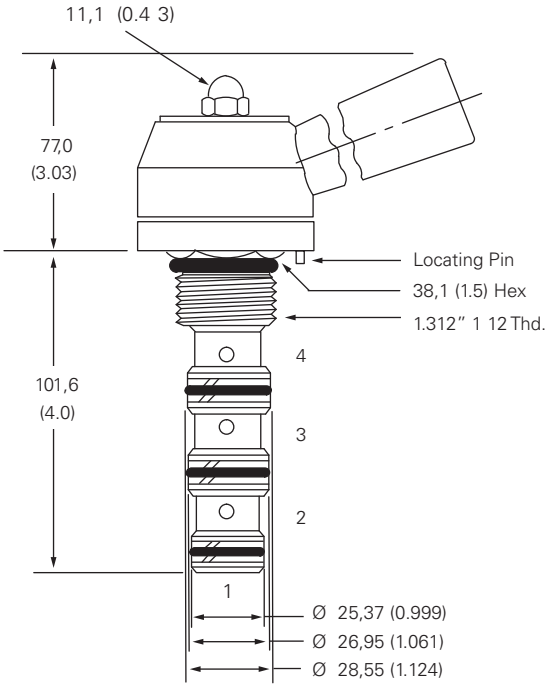

Installation drawing (aluminum)

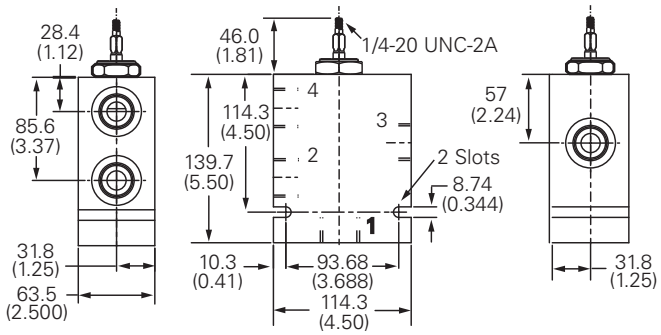

Where measurements are critical request certified drawings. We reserve the right to change specifications without notice.

MRV15-16 - Manual rotary valve

Manual semi-rotary directional control valve
45 L/min (12 USgpm) • 350 bar (5000 psi)

3 position models

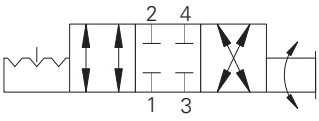

Operation

This valve will direct flow between ports 1 and 2 and ports 3 and 4 in one position.

By turning the operator 90°, flow will be directed between ports 1 and 4 and port 3 and 2. During the cross-over transition, all ports are blocked.

Features

Hardened, ground and honed working parts to limit leakage and prolong life. Various levers and knobs available with and without detent. Working pressure 350 bar.

Sectional view

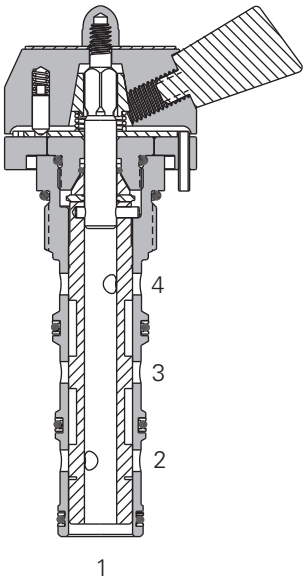

Performance data

Ratings and specifications

Performance data is typical with fluid at 21,8 cSt (105 SUS) and 49°C (120°F)	
Typical application pressure (all ports)	350 bar (5000 psi)
Cartridge fatigue pressure (infinite life)	350 bar (5000 psi)
Rated flow	45 L/min (12 USgpm)
Internal leakage	300 cc/min (18in³/min) @ 350 bar (5000 psi)
Temperature range	-40° to 120°C (-40° to 248°F)
Manual operators	D- Lever (3-position detent)* * Light duty housing only.
Cavity	C-16-4
Fluids	All general purpose hydraulic fluids such as: MIL-H-5606, SAE 10, SAE 20, etc.
Filtration	Cleanliness code 18/**16/13**
Standard housing materials	Aluminum and Steel
Weight cartridge only	0.65 kg (1.43 lbs))
Seal kit	889634 (Buna-N), 889638 (Viton®)

Viton is a registered trademark of E.I. DuPont

Description

This is a high pressure 4 way 2 or 3 position manual semi-rotary directional control valve. In the center condition all ports are closed.

Pressure drop curves

Cartridge only

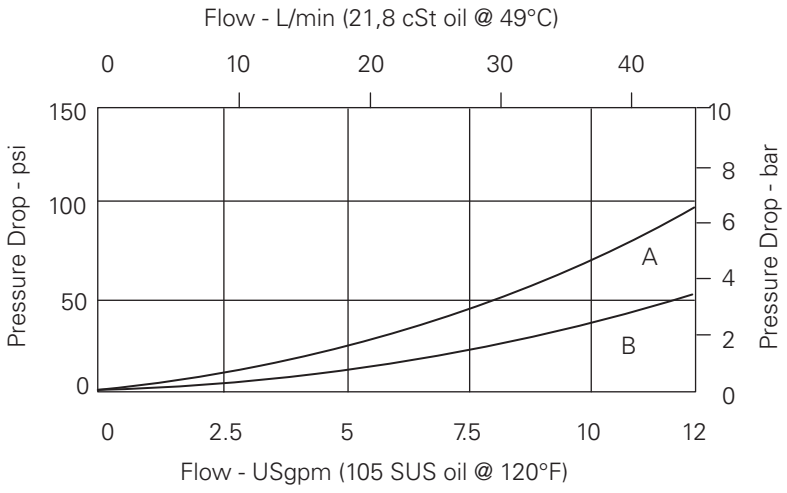

A - Port 3 to 4 or 3 to 2

B - Port 4 to 1 or 2 to 1

Where measurements are critical request certified drawings. We reserve the right to change specifications without notice.

MRV15-16 - Manual rotary valve

Manual semi-rotary directional control valve
45 L/min (12 USgpm) • 350 bar (5000 psi)

Model code

MRV15 – 16 – (V) – * – ** – 00**

1 2 3 4 5 6

1 Function
MRV15 - Manual rotary valve 4-way

2 Size
16 - 16 size

3 Seal
Blank - Buna-N
V - Viton®

4 Manual operators
0 - No operator
D - Lever (3-position detent)

5 Port size
0 - Cartridge only

6 Special features
00 - None
(Only required if valve has special features, omitted if "00")

Code	Port size	Housing number		
0		**Aluminum light duty**	**Aluminum fatigue rated**	**Steel**
A12T	SAE 12	566411		
A6B	3/4" BSPP	02-175468		
A10H	SAE 10		876729	
A12H	SAE 12		876731	
A4G	1/2" BSPP		876728	
A6G	3/4" BSPP		876730	
S4G	1/2" SSPP			02-175143
S6G	3/4" BSPP			02-175144
S10T	SAE 10			02-175141
S12T	SAE 12			02-175142

See section J for housing details.

Dimensions
mm (inch)

Torque cartridge in housing
A - 108-122 Nm (80-90 ft. lbs)
S - 136-147 Nm (100-110 ft. lbs)

Cartridge only

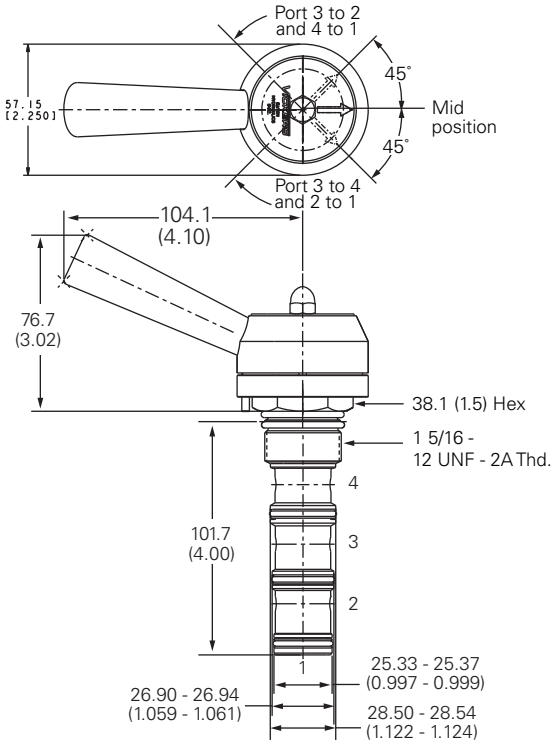

Installation drawing (steel)

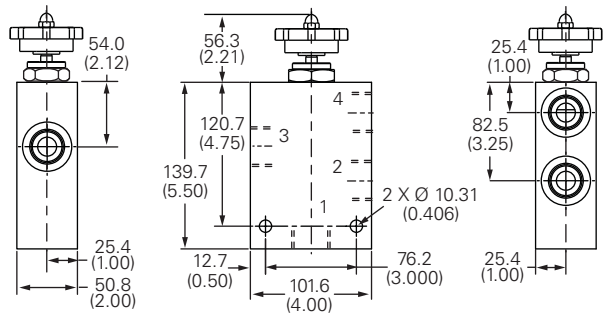

⚠ Warning

Aluminum housings can be used for pressures up to 210 bar (3000 psi). Steel housings must be used for operating pressures above 210 bar (3000 psi).

Where measurements are critical request certified drawings. We reserve the right to change specifications without notice.

MRV6-10 - Manual rotary valve

Manual semi-rotary directional control valve
11 L/min (3 USgpm) • 210 bar (3000 psi)

3 position models

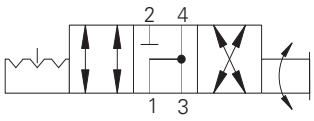

Operation

This valve will direct flow between ports 1 and 2 and ports 3 and 4 in one position.

By turning the operator 90°, flow will be directed between ports 1 and 4 and port 3 to 2. During the cross-over transition all ports 1, 3 and 4 are open to each other and port 2 is blocked.

Features

Hardened, ground and honed working parts to limit leakage and prolong life. Various levers and knobs available with and without detent.

Sectional view

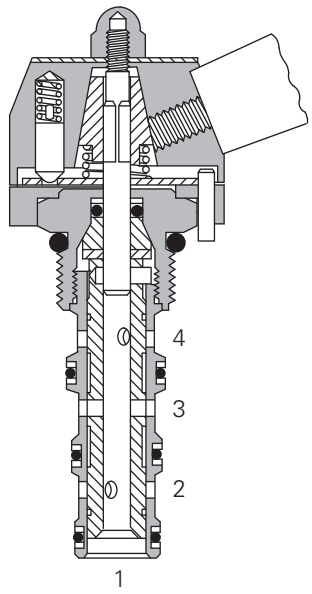

Description

This is a 4 way 2 or 3 position manual semi-rotary directional control valve. In the center condition all port 2 is closed. All other ports are open.

Performance data

Ratings and specifications

Performance data is typical with fluid at 21,8 cSt (105 SUS) and 49°C (120°F)	
Typical application pressure (all ports)	210 bar (3000 psi)
Cartridge fatigue pressure (infinite life)	210 bar (3000 psi)
Rated flow	11 L/min (3 USgpm)
Internal leakage	164cc/min (10in³/min) maximum @ 210 bar (3000 psi)
Temperature range	-40° to 120°C (-40° to 248°F)
Manual operators	**D** - Lever (3-position detent)* **E** - Ball (3-position detent)*
Cavity	C-10-4
Fluids	All general purpose hydraulic fluids such as: MIL-H-5606, SAE 10, SAE 20, etc.
Filtration	Cleanliness code 18/**16/13**
Standard housing materials	Aluminum and Steel
Weight cartridge only	0,27 kg (0.59 lbs)
Seal kit	889625 (Buna-N), 566080 (Viton®)

* Light duty housing only.
Viton is a registered trademark of E.I. DuPont

Pressure drop curves

Cartridge only

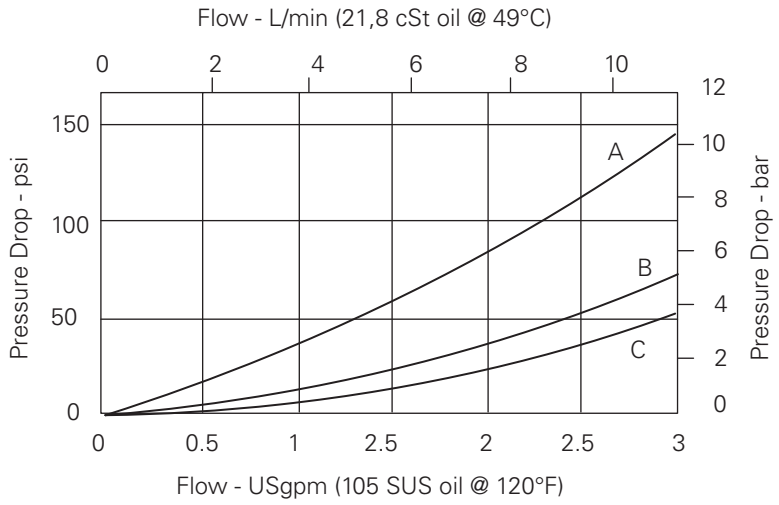

A - Port 3 to 4 or 3 to 2

B - Port 4 to 1

C - Port 2 to 1

Where measurements are critical request certified drawings. We reserve the right to change specifications without notice.

MRV6-10 - Manual rotary valve

Manual semi-rotary directional control valve
11 L/min (3 USgpm) • 210 bar (3000 psi)

Model code

MRV6 – 10 – (V) – ** – * – 00**

1 2 3 4 5 6

1 Function

MRV6 - Manual rotary valve 4-way

2 Size

10 - 10 size

3 Seal material

Blank - Buna-N
V - Viton®

4 Manual operator

O - No operator
D - Level (3-position detent)
E - Ball (3-position detent)

5 Port size

Code	Port size	Housing number		
		Aluminum Light duty	Aluminum Fatigue rated	Steel
0	Cartridge			
A3B	3/8" BSPP	02-179705	–	–
A6T	SAE 6	566161	–	–
A2G	1/4" BSPP	–	876709	–
A3G	3/8" BSPP	–	876715	–
A6H	SAE 6	–	876708	–
A8H	SAE 8	–	876713	–
S2G	1/4" BSPP	–	–	02-175139
S3G	3/8" BSPP	–	–	02-175140
S6T	SAE 6	–	–	02-175137
S8T	SAE 8	–	–	02-175138

See section J for housing details.

6 Special features

00 - None

(Only required if valve has special features, omitted if "00".)

Dimensions

mm (inch)

Torque cartridge in aluminum housing 47-54 Nm (35-40 ft lbs)

Cartridge only

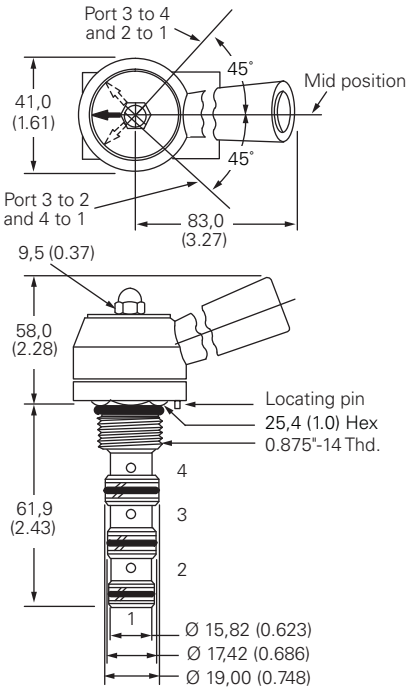

Installation drawing (Aluminum)

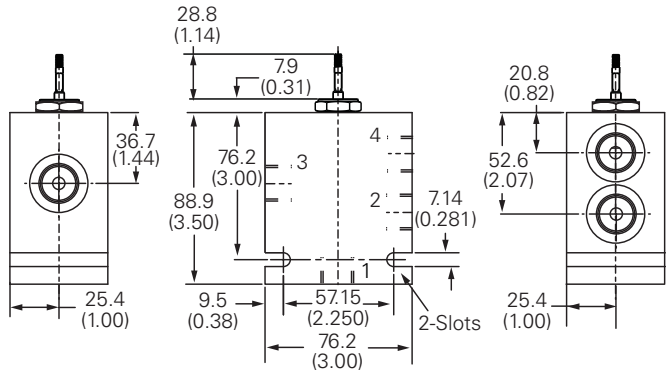

Where measurements are critical request certified drawings. We reserve the right to change specifications without notice.

MRV6-16 - Manual rotary valve

Manual semi-rotary directional control valve
11 L/min (3 USgpm) • 350 bar (3000 psi)

3 position models

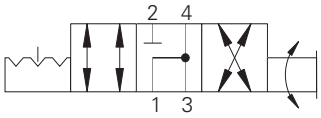

Operation

This valve will direct flow between ports 1 and 2 and ports 3 and 4 in one position.

By turning the operator 90°, flow will be directed between ports 1 and 4 and port 3 to 2. During the cross-over transition all ports 1, 3 and 4 are open to each other and port 2 is blocked.

Features

Hardened, ground and honed working parts to limit leakage and prolong life. Various levers and knobs available with and without detent.

Sectional view

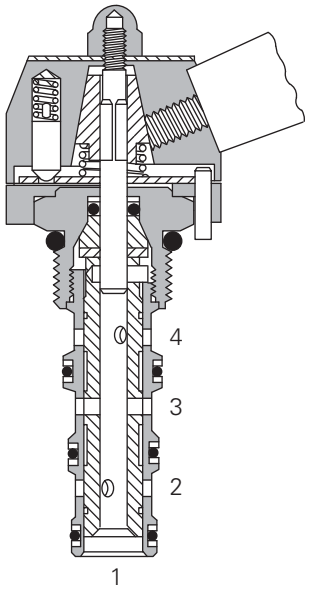

Performance data

Ratings and specifications

Performance data is typical with fluid at 21,8 cSt (105 SUS) and 49°C (120°F)	
Typical application pressure (all ports)	350 bar (5000 psi)
Cartridge fatigue pressure (infinite life)	350 bar (5000 psi)
Rated flow	11 L/min (3 USgpm)
Temperature range	-40°C to 120°C (-40° to 248°F)
Manual operators	D - Lever (3-position detent) E - Ball (3-position detent)
Cavity	C-16-4
Fluids	All general purpose hydraulic fluids such as: MIL-H-5606, SAE 10, SAE 20 etc.
Filtration	Cleanliness code 18/**16/13**
Standard housing material	Aluminum and Steel
Weight cartridge only	0,27 kg (0.59 lbs)
Seal kit	889625 (Buna-N), 566080 (Viton®)

Viton is a registered trademark of E.I. DuPont

Description

This is a 4 way 2 or 3 position manual semi-rotary directional control valve. In the center condition port 2 is closed. All other ports are open.

Pressure drop curves

Cartridge only

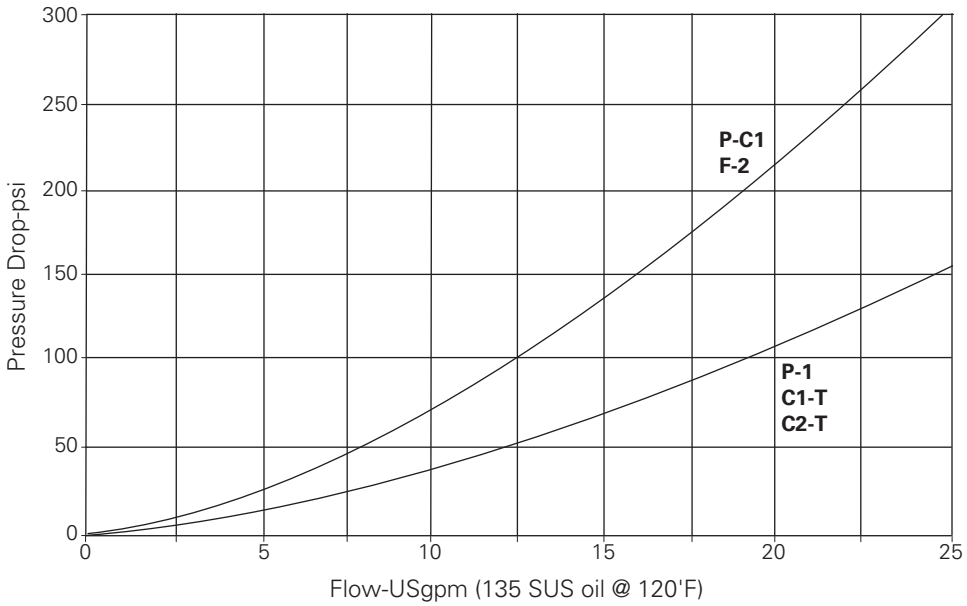

Where measurements are critical request certified drawings. We reserve the right to change specifications without notice.

MRV6-16 - Manual rotary valve

Manual semi-rotary directional control valve
11 L/min (3 USgpm) • 350 bar (5000 psi)

Model code

MRV6	16	(V)	D	0	00
1	2	3	4	5	6

1 Function
MRV6 - Manual rotary valve 4-way

2 Size
16 - 16 size

3 Seal material
Blank - Buna-N
V - Viton

4 Adjustment
D - 3-position detent

5 Port size
0 - Cartridge Only
6 - 3/4" NPTF
8 - 1" NPTF
12T - SAE 12
16T - SAE 16

6 Special features
00 - None
(Only required if valve has special features, omitted if "00".)

D

Dimensions

mm (inch)

Cartridge and Installation drawing

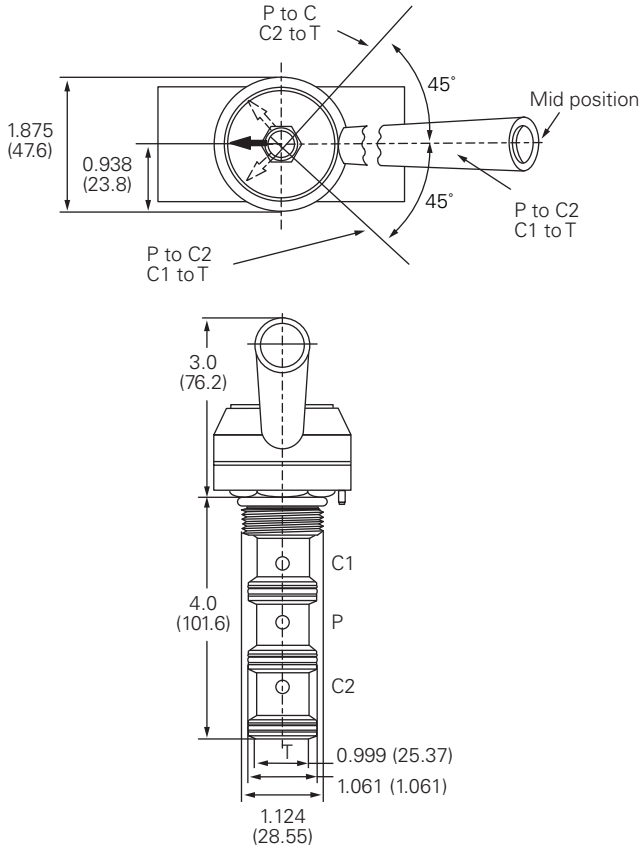

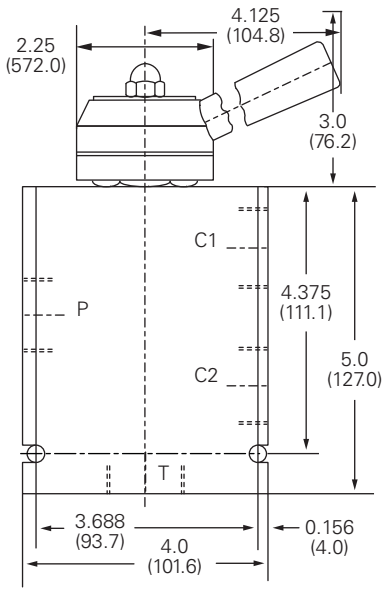

⚠ Warning

Aluminum housings can be used for pressures up to 210 bar (3000 psi). Steel housings must be used for operating pressures above 210 bar (3000 psi).

Where measurements are critical request certified drawings. We reserve the right to change specifications without notice.

MRV7-10 - Manual rotary valve

Manual semi-rotary directional control valve
11 L/min (3 USgpm) • 210 bar (3000 psi)

3 position models

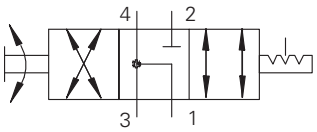

Operation

This valve will direct flow between ports 1 and 2 and ports 3 and 4 in one position.

By turning the operator 90°, flow will be directed between ports 1 and 4 and port 3 to 2. During the cross-over transition all ports are open to each other.

Features

Hardened, ground and honed working parts to limit leakage and prolong life. Various levers and knobs available with and without detent.

Sectional view

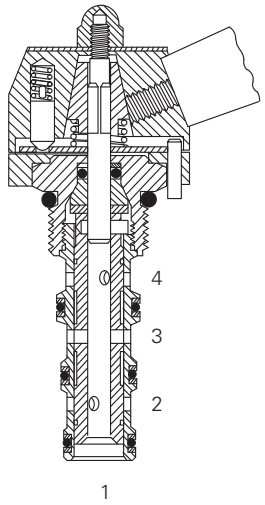

Description

This is a 4 way 2 or 3 position manual semi-rotary directional control valve. In the center condition all ports are open to each other.

Performance data

Ratings and specifications

Performance data is typical with fluid at 21,8 cSt (105 SUS) and 49°C (120°F)	
Typical application pressure (all ports)	210 bar (3000 psi)
Cartridge fatigue pressure (infinite life)	210 bar (3000 psi)
Rated flow	11 L/min (3 USgpm)
Internal leakage	164cc/min (10in³/min) maximum @ 210 bar (3000 psi)
Temperature range	-40° to 120°C (-40° to 248°F)
Manual operators	**D** - Lever (3-position detent)* **E** - Ball (3-position detent)*
Cavity	C-10-4
Fluids	All general purpose hydraulic fluids such as: MIL-H-5606, SAE 10, SAE 20, etc.
Filtration	Cleanliness code 18/**16/13**
Standard housing materials	Aluminum and Steel
Weight cartridge only	0,27 kg (0.59 lbs)
Seal kit	889625 (Buna-N), 566080 (Viton®)

* Light duty housing only.
Viton is a registered trademark of E.I. DuPont

Pressure drop curves

Cartridge only

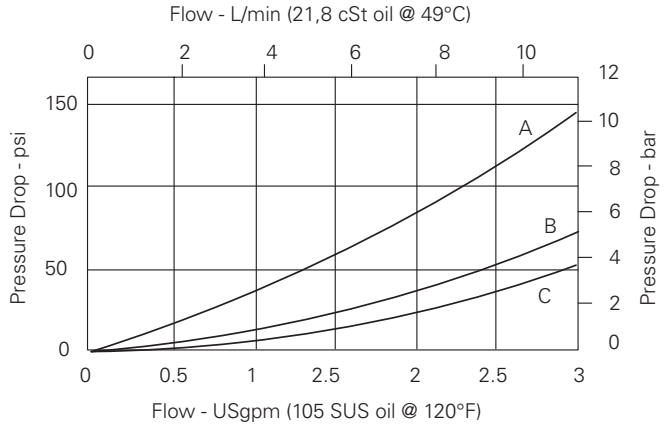

A - Port 3 to 4 or 3 to 2

B - Port 4 to 1

C - Port 2 to 1

Where measurements are critical request certified drawings. We reserve the right to change specifications without notice.

MRV7-10 - Manual rotary valve

Manual semi-rotary directional control valve
11 L/min (3 USgpm) • 210 bar (3000 psi)

Model code

MRV7 – 10 – (V) – ** – * – 00**

1 2 3 4 5 6

1 Function

MRV7 - Manual rotary valve 4-way

2 Size

10 - 10 size

3 Seal material

Blank - Buna-N
V - Viton

4 Manual operator

O - No operator
D - Level (3-position detent)
E - Ball (3-position detent)

5 Port size

Code	Port size	Housing number		
		Aluminum light duty	Aluminum fatigue rated	Steel
0	Cartridge			
A3B	3/8" BSPP	02-179705	–	–
A6T	SAE 6	566161	–	–
A2G	1/4" BSPP	–	876709	–
A3G	3/8" BSPP	–	876715	–
A6H	SAE 6	–	876708	–
A8H	SAE 8	–	876713	–
S2G	1/4" BSPP	–	–	02-175139
S3G	3/8" BSPP	–	–	02-175140
S6T	SAE 6	–	–	02-175137
S8T	SAE 8	–	–	02-175138

See section J for housing details.

6 Special features

00 - None

(Only required if valve has special features, omitted if "00").

Dimensions

mm (inch)

Torque cartridge in aluminum housing 47-54 Nm (35-40 ft lbs)

Cartridge only

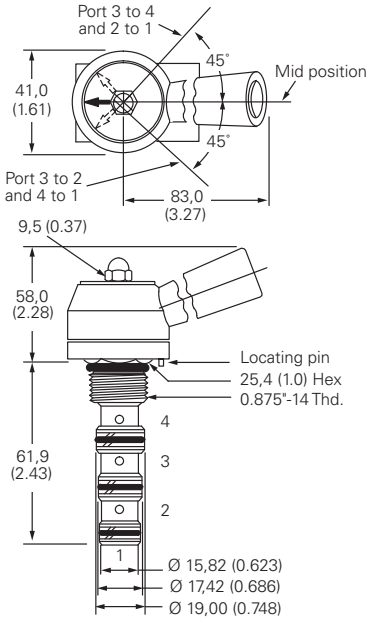

Installation drawing (Aluminum)

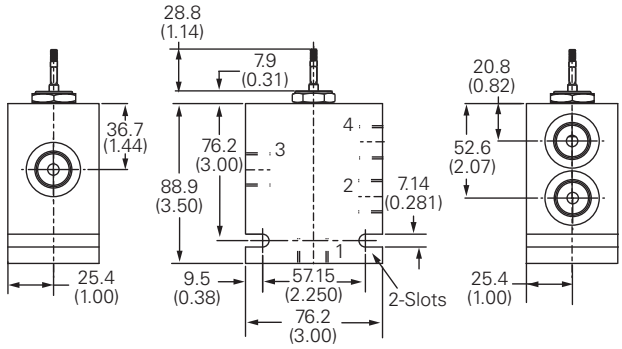

Where measurements are critical request certified drawings. We reserve the right to change specifications without notice.

MLV9-12-A - Directional valve

Manual lever valve, spool
60 L/min (15.9 USgpm) • 210 bar (3000 psi)

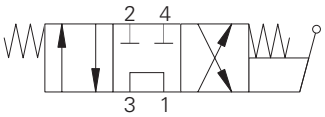

Operation

In the center position, this valve allows flow from port 3 to port 1 and blocks ports 2 and 4.

In position 1, flow is directed from port 3 to port 2 and from port 4 to port 1. In position 2, flow is directed from port 3 to port 4 and from port 2 to port 1.

Features

Hardened, ground and honed working parts to limit leakage and prolong life. Compact design with a low Pressure drop. Handle position fully adjustable.

Sectional view

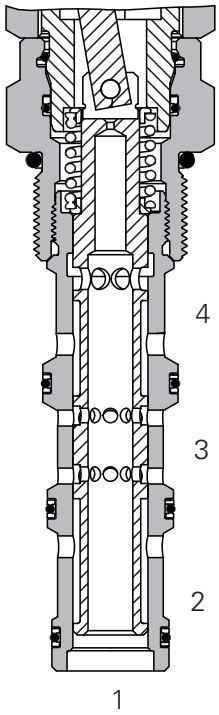

Description

This is a lever operated 4 way 3 position direct acting spool type directional valve. Spring centered with port 3 open to port 1 (Tank). Ports 2 and 4 blocked. This valve can easily be installed into a manifold simplifying the design and removing leak points.

Performance data

Ratings and specifications

Performance data is typical with fluid at 21,8 cST (105 SUS) and 49°C (120°F)	
Typical application pressure (all ports)	210 bar (3000 psi)
Cartridge fatigue pressure (infinite life)	210 bar (3000 psi)
Fatigue pressure	(210 bar) 3,000 psi per NFPA/T2-6-1 R2-2000
Rated burst pressure	(626 bar) 9090 psi per NFPA/T2-6-1 R2-2000
Max flow	60 L/min (15.9 USgpm)
Temperature range	-40° to 120°C (-40° to 248°F)
Cavity	C-12-4
Fluids	All general purpose hydraulic fluids such as: MIL-H-5606, SAE 10, SAE 20 etc.
Filtration	Cleanliness code 18/**16/13**
Standard housing materials	Aluminum
Weight	.57 kg (1.25 lbs)
Seal kit	9900171-000 (Buna-N), 9900172 (Viton®)
Internal leakage	246 cm^3/min (15 in^3/min) max. @ 210 bar (3000 psi)
Endurance tested to 1 million cycles at full rated flow and pressure	

Viton is a registered trademark of E.I. DuPont

Pressure drop

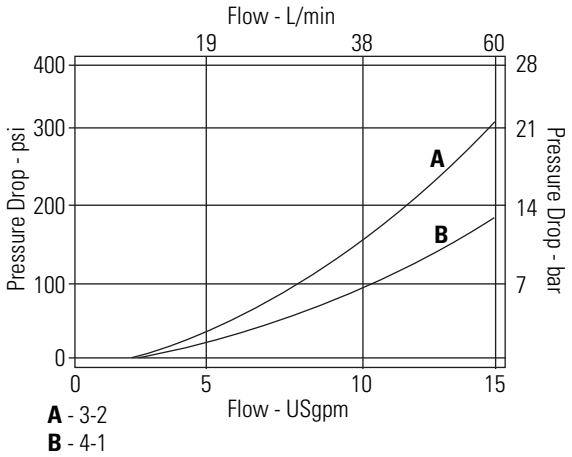

Where measurements are critical request certified drawings. We reserve the right to change specifications without notice.

MLV9-12-B - Directional valve

Manual lever valve, spool
60 L/min (15.9 USgpm) • 210 bar (3000 psi)

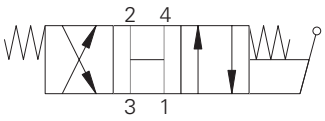

Operation

In the center position, all ports are open to each other. In position 1, flow is directed from port 3 to port 4 and from port 2 to port 1.

In position 2, flow is directed from port 3 to port 2 and from port 4 to port 1.

Features

Hardened, ground and honed working parts to limit leakage and prolong life. Compact design with a low Pressure drop. Handle position fully adjustable.

Sectional view

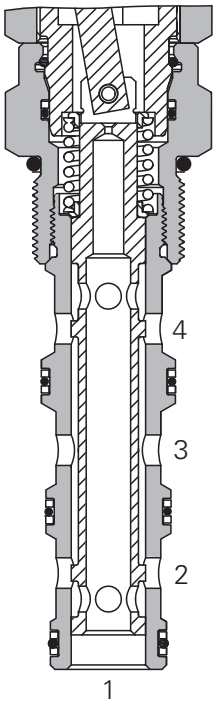

Performance data

Ratings and specifications

Performance data is typical with fluid at 21,8 cST (105 SUS) and 49°C (120°F)	
Typical application pressure (all ports)	210 bar (3000 psi)
Cartridge fatigue pressure (infinite life)	210 bar (3000 psi)
Fatigue pressure	(210 bar) 3,000 psi per NFPA/T2-6-1 R2-2000
Rated burst pressure	(626 bar) 9090 psi per NFPA/T2-6-1 R2-2000
Max flow	60 L/min (15.9 USgpm)
Temperature range	-40° to 120°C (-40° to 248°F)
Cavity	C-12-4
Fluids	All general purpose hydraulic fluids such as: MIL-H-5606, SAE 10, SAE 20 etc.
Filtration	Cleanliness code 18/**16/13**
Standard housing materials	Aluminum
Weight	.57 kg (1.25 lbs)
Seal kit	9900171-000 (Buna-N), 9900172 (Viton®)
Internal leakage	246 cm^3/min (15 in^3/min) max. @ 210 bar (3000 psi)
Endurance tested to 1 million cycles at full rated flow and pressure	

Viton is a registered trademark of E.I. DuPont

Description

This is a lever operated 4 way 3 position direct acting spool type directional valve. Spring centered with all ports open. This valve can easily be installed into a manifold simplifying the design and removing leak points.

Pressure drop curves

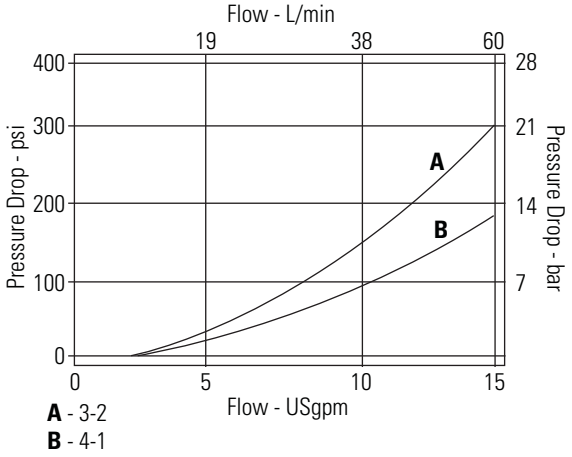

Where measurements are critical request certified drawings. We reserve the right to change specifications without notice.

MLV9-12-E - Directional valve

Manual lever valve, spool
60 L/min (15.9 USgpm) • 210 bar (3000 psi)

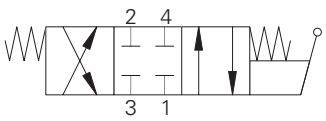

Operation

In the center position, all ports are blocked. In position 1, flow is directed from port 3 to port 4 and from port 2 to port 1.

In position 2, flow is directed from port 3 to port 2 and from port 4 to port 1.

Features

Hardened, ground and honed working parts to limit leakage and prolong life. Compact design with a low Pressure drop. Handle position fully adjustable.

Sectional view

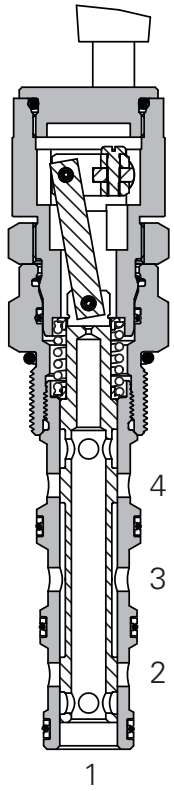

Description

This is a lever operated 4 way 3 position direct acting spool type directional valve. Spring centered with all ports closed. This valve can easily be installed into a manifold simplifying the design and removing leak points.

Performance data

Ratings and specifications

Performance data is typical with fluid at 21,8 cST (105 SUS) and 49°C (120°F)	
Typical application pressure (all ports)	210 bar (3000 psi)
Cartridge fatigue pressure (infinite life)	210 bar (3000 psi)
Fatigue pressure	(210 bar) 3,000 psi per NFPA/T2-6-1 R2-2000
Rated burst pressure	(626 bar) 9090 psi per NFPA/T2-6-1 R2-2000
Max flow	60 L/min (15.9 USgpm)
Temperature range	-40° to 120°C (-40° to 248°F)
Cavity	C-12-4
Fluids	All general purpose hydraulic fluids such as: MIL-H-5606, SAE 10, SAE 20 etc.
Filtration	Cleanliness code 18/**16/13**
Standard housing materials	Aluminum
Weight	.57 kg (1.25 lbs)
Seal kit	9900171-000 (Buna-N), 9900172 (Viton®)
Internal Leakage	246 cm^3/min (15 in^3/min) max. @ 210 bar (3000psi)
Endurance tested to 1 million cycles at full rated flow and pressure	

Viton is a registered trademark of E.I. DuPont

Pressure drop

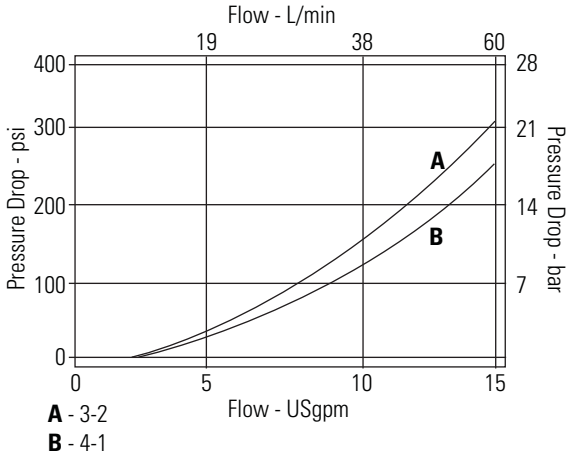

Where measurements are critical request certified drawings. We reserve the right to change specifications without notice.

MLV9-12-F - Directional valve

Manual lever valve, spool
60 L/min (15.9 USgpm) • 210 bar (3000 psi)

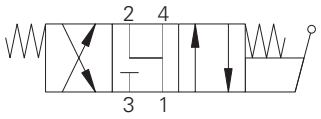

Operation

In the center position, port 1, port 2, and port 4 are open to each other while port 3 is blocked. In position 1, flow is directed from port 3 to port 4 and from port 2 to port 1.

In position 2, flow is directed from port 3 to port 2 and from port 4 to port 1.

Features

Hardened, ground and honed working parts to limit leakage and prolong life. Compact design with a low Pressure drop. Handle position fully adjustable.

Sectional view

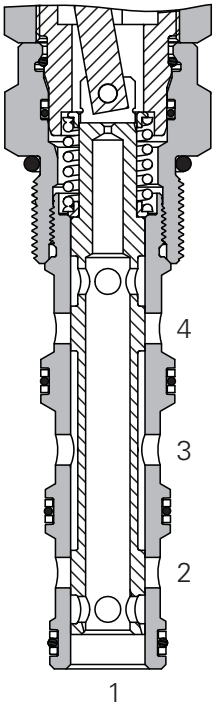

Performance data

Ratings and specifications

Performance data is typical with fluid at 21,8 cST (105 SUS) and 49°C (120°F)	
Typical application pressure (all ports)	210 bar (3000 psi)
Cartridge fatigue pressure (infinite life)	210 bar (3000 psi)
Fatigue pressure	(210 bar) 3,000 psi per NFPA/T2-6-1 R2-2000
Rated burst pressure	(626 bar) 9090 psi per NFPA/T2-6-1 R2-2000
Max flow	60 L/min (15.9 USgpm)
Temperature range	-40° to 120°C (-40° to 248°F)
Cavity	C-12-4
Fluids	All general purpose hydraulic fluids such as: MIL-H-5606, SAE 10, SAE 20 etc.
Filtration	Cleanliness code 18/**16/13**
Standard housing materials	Aluminum
Weight	.57 kg (1.25 lbs)
Seal kit	9900171-000 (Buna-N), 9900172 (Viton®)
Internal Leakage	246 cm^3/min (15 in^3/min) max. @ 210 bar (3000psi)
Endurance tested to 1 million cycles at full rated flow and pressure	

Viton is a registered trademark of E.I. DuPont

Pressure drop

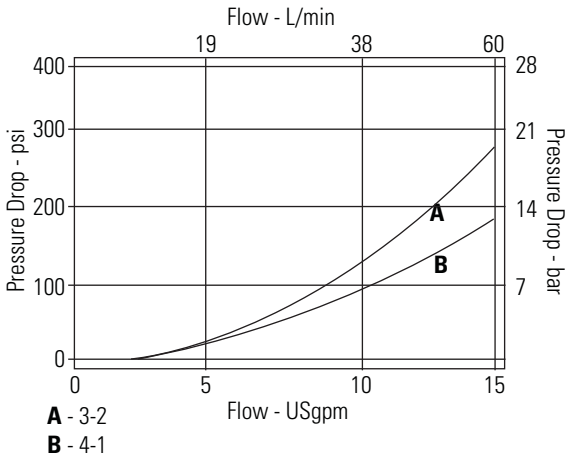

Description

This is a lever operated 4 way 3 position direct acting spool type directional valve. Spring centered with ports 2 and 4 to tank and port 2 blocked. This valve can easily be installed into a manifold simplifying the design and removing leak points.

Where measurements are critical request certified drawings. We reserve the right to change specifications without notice.

MLV9-12 - Directional valve

Manual lever valve, spool
60 L/min (15.9 USgpm) • 210 bar (3000 psi)

Model code

MLV9 – 12 – * – * – * – L – * – * **

1 2 3 4 5 6 7 8 9

1 Function
MLV9 - Manual lever valve

2 Size
12 - 12 size

3 Seal material
Blank - Buna-N
V - Viton®

4 Spool center condition

A

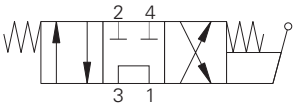

B

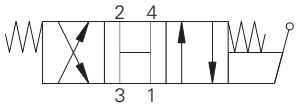

E

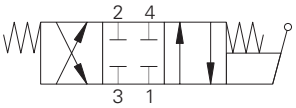

F

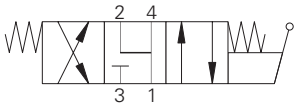

5 Detent option
O - Spring return
D - Denter, spring centered

6 Lever
L - Lever

7 Housing material
Blank - Cartridge only
A - Aluminum

8 Port size - bodied valve

Code	Port size	Housing number
		Aluminum
0	Cartridge only	
A4G	1/2" BSPP	5986431-001
A6G	3/4" BSPP	5986432-001
A8H	SAE 8	5986433-001
A10T	SAE 10	6030517-001
A12H	SAE 12	5986436-001

See section J for housing details.

9 Lever position
00 - 90°
01 - 45°
02 - 0°
03 - 135°
04 - 180°

See page D-297 for lever position

Where measurements are critical request certified drawings. We reserve the right to change specifications without notice.

Dimensions
mm (inch)

Torque cartridge in aluminum
or steel housing
34-41 Nm (25-30 ft lbs)

Cartridge only

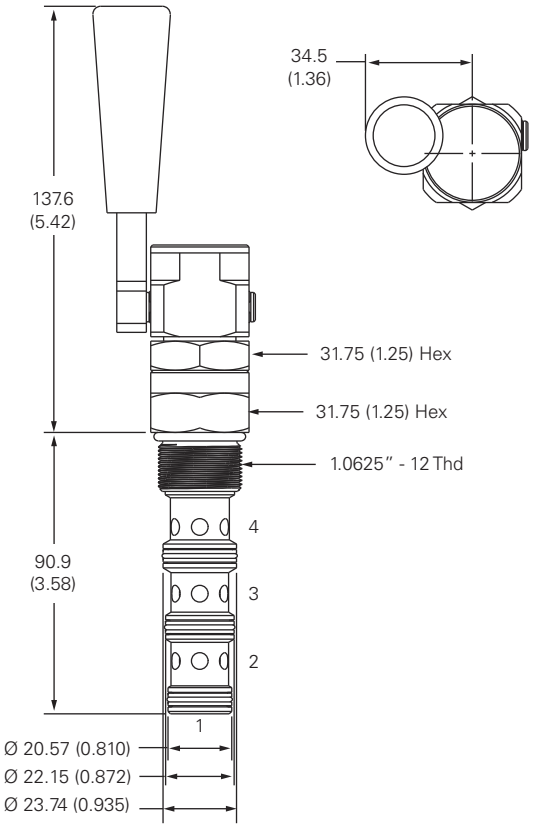

Installation drawings (aluminum)

MLV9-12-A/B/E/F

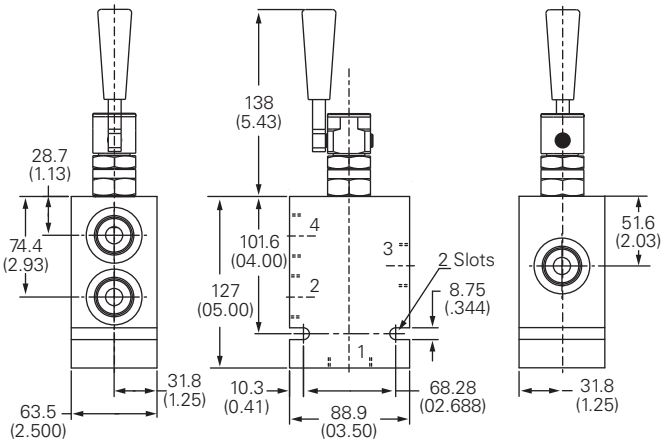

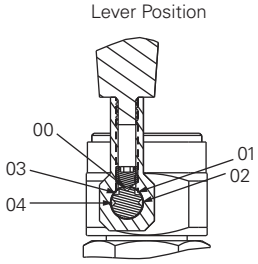

Spare parts

Lever - 21113

Where measurements are critical request certified drawings. We reserve the right to change specifications without notice.

3CP2 - Series check valve

Check, manually operated
5.5-15 L/min (1.5-4 USgpm) • 210 bar (3000 psi)

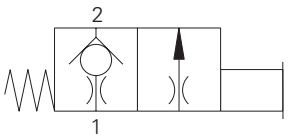

Sectional view

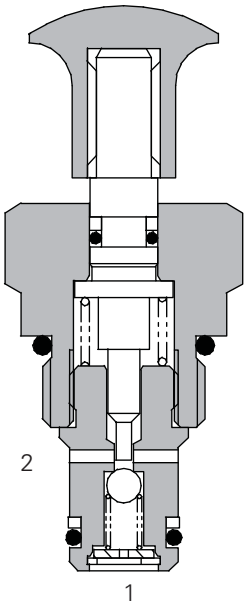

Description

These cartridges permit a small regulated flow to pass when the hand knob is depressed. A typical application would be on an access platform to lower the boom in the event of a power failure.

Operation

The poppet seals flow from ports 1 to 2, depressing the hand knob lifts the poppet from its seat permitting flow the flow rate is determined by the size of the orifice and the pressure in the system, various orifice sizes are available.

Flow from port 2 to 1 should be avoided - if required please consult our technical department.

Features

Cartridge design with machined seats and precision ground balls gives excellent flow reseat characteristics.

Performance data

Ratings and specifications

Performance data is typical with fluid at 21,8 cST (105 SUS) and 49°C (120°F)	
Max pressure	210 bar (3000 psi)
Rated flow	.9 mm orifice 5.5 L/min (1.4 US gpm), 1.5 mm orifice 15 L/min (4 US gpm)
Internal leakage	.3 ml/min nominal (5 dpm)
Temperature range	-30° to 90°C (-22° to 194°F)
Cavity	A879 (see Section M)
Torque cartridge into cavity	45 Nm (33 lbs ft)
Mounting position	Unrestricted
Filtration	BS5540/4 Class 18/**13** (25 micron or better)
Nominal viscosity range	5 to 500 cSt
Cartridge material	All steel construction. External parts electroless zinc plated.
Standard housing materials	Aluminum
Weight	.05 kg (.11 lbs)
Seal kit	SK187 (Nitrile) SK187V (Viton®)

Viton is a registered trademark of E.I. DuPont

Pressure drop

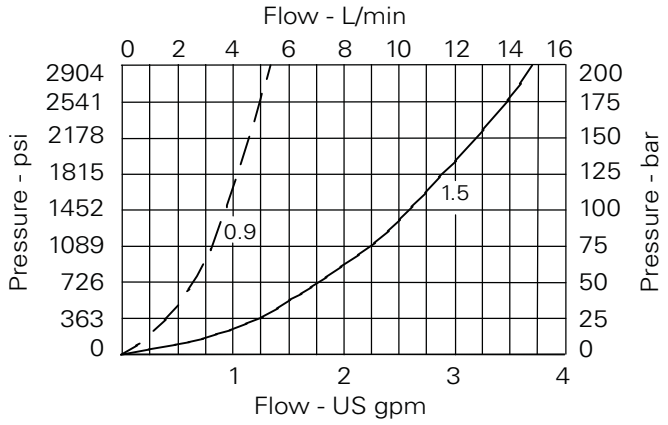

Where measurements are critical request certified drawings. We reserve the right to change specifications without notice.

3CP2 - Series check valve

Check, manually operated
5.5-15 L/min (1.5-4 USgpm) • 210 bar (3000 psi)

Model code

3CP2 – 3W – 0.9 S

1 2 3 4

1 Function

3CP2 - Cartridge only
3CP25 - Cartridge and body

2 Port size

Code	Port size	Housing number	
		Aluminum	Steel
0	Cartridge only		
2W	1/4" BSP	A1485	
3W	3/8" BSP	A1043	A18175
6T	3/8" SAE	A15676	A14843

See section J for housing details.

3 Orifice size

0.9 - 0.9 mm
1.5 - 1.5 mm

4 Seals

S - Nitrile
SV - Viton

D

Dimensions

mm (inch)

Cartridge only

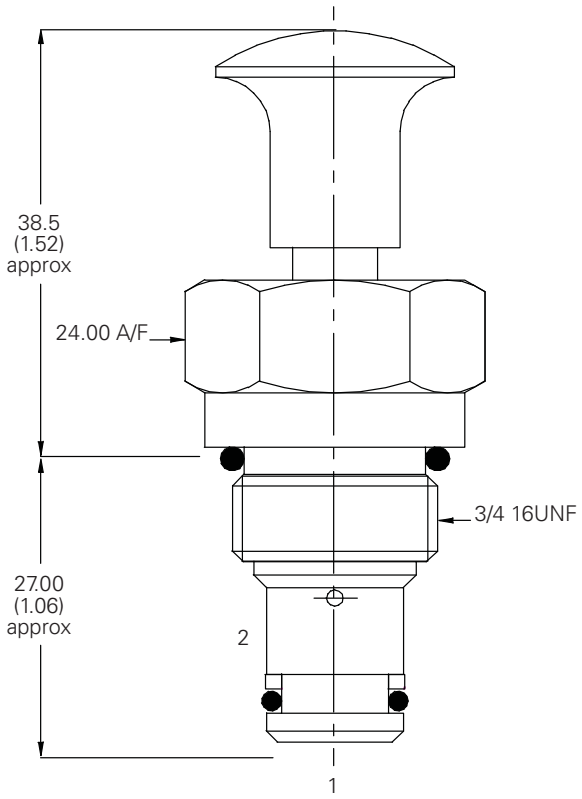

Installation drawing

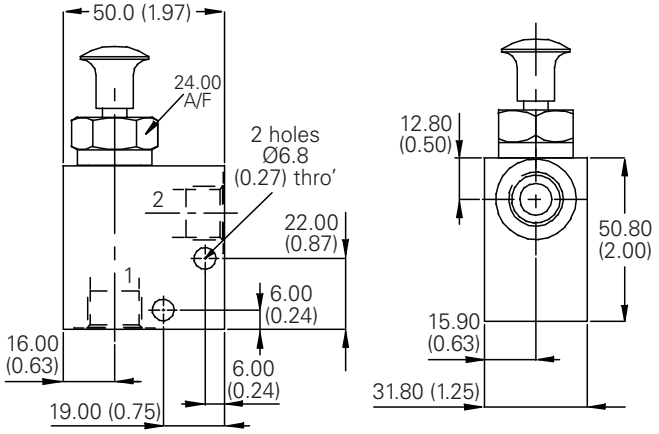

Where measurements are critical request certified drawings. We reserve the right to change specifications without notice.

MPV1-10 - Manual pull valve

Poppet type, normally closed valve
45 L/min (11.9 USgpm) • 210 bar (3000 psi)

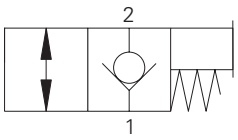

Operation

This valve blocks flow form port 2 to port 1 and will allow flow form port 1 to port 2 when the spring bias is overcome.

Features

Hardened and ground poppet and seat with very low internal leakage

Sectional view

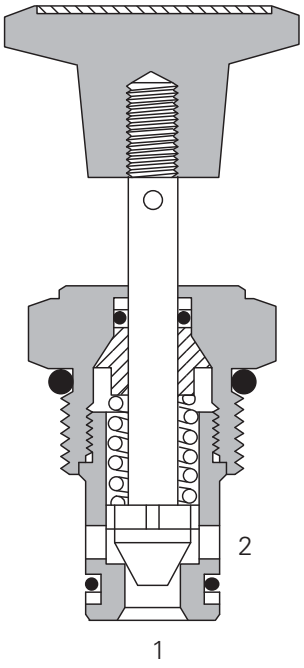

Performance data

Ratings and specifications

Performance data is typical with fluid at 21,8 cST (105 SUS) and 49°C (120°F)	
Typical application pressure (all ports)	210 bar (3000 psi)
Cartridge fatigue pressure (infinite life)	210 bar (3000 psi)
Rated flow	45 L/min (11.9 USgpm)
Internal leakage, port 2 to port 1	5 drops/min. maximum @ 210 bar (3000 psi)
Temperature range	-40° to 120°C (-40° to 248°F)
Cavity	C-10-2
Fluids	All general purpose hydraulic fluids such as: MIL-H-5606, SAE 10, SAE 20 etc.
Filtration	Cleanliness code 18/**16/13**
Standard housing materials	Aluminum
Weight cartridge only	0,11 kg (0.24 lbs)
Seal kit	565803 (Buna-N), 566086 (Viton®)

Viton is a registered trademark of E.I. DuPont

Description

This is a manually operated, pull to open normally closed none balanced poppet screw in cartridge valve. Ideal as an emergency lower valve.

Pressure drop

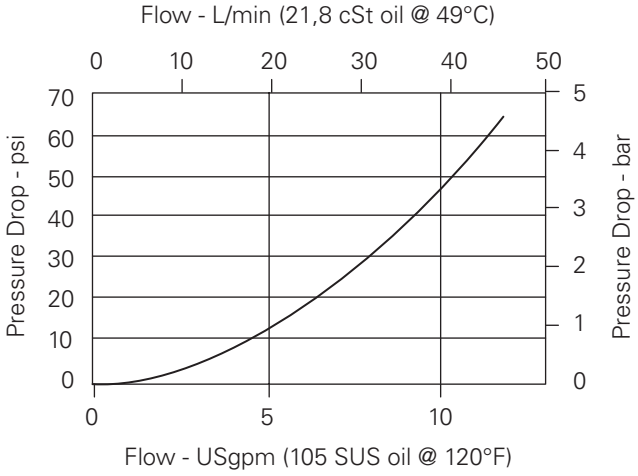

⚠ Warning
Back pressure of 16 bar (240 psi) will unseat the poppet.

Where measurements are critical request certified drawings. We reserve the right to change specifications without notice.

MPV1-10 - Manual pull valve

Poppet type, normally closed valve
45 L/min (11.9 USgpm) • 210 bar (3000 psi)

Model code

MPV1 – 10 (V) – * – ** – 00
1 2 3 4 5 6

1 Function
MPV1 - Manual pull valve

2 Size
10 - 10 size

3 Seal material
Blank - Buna-N
V - Viton®

4 Type
T - Stem only
K - Knob

5 Port size
0 - Cartridge only

Code	Port size	Housing number	
		Aluminium light duty	Aluminium fatigue rated
3B	3/8" BSPP	02-175462	
6T	SAE 6	566151	
2G	1/4" BSPP	-	876702
3G	3/8" BSPP	-	876703
6H	SAE 6	-	876700
8H	SAE 8	-	876701

See section J for housing details.

6 Special features
00 - None
(Only required if valve has special features, omitted if "00.")
SS - 316 Stainless steel external components

D

Dimensions
mm (inch)

Torque cartridge in aluminum housing
47-54 Nm (35-40 ft lbs)

Cartridge only

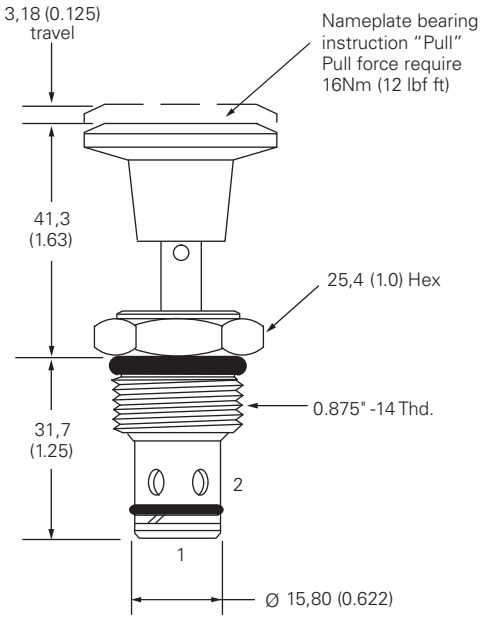

Installation drawing

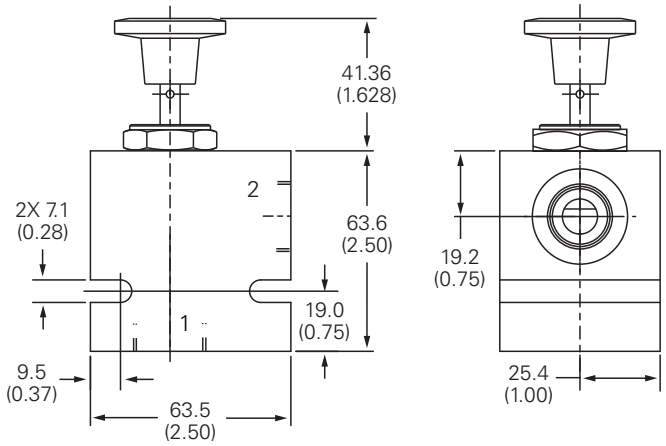

Where measurements are critical request certified drawings. We reserve the right to change specifications without notice.

MPV3-10 - Manual pull valve

Normally closed valve
45 L/min (11.9 USgpm) • 210 bar (3000 psi)

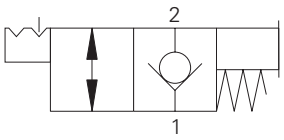

Operation

This valve blocks flow form port 2 to port 1 and will allow flow form port 1 to port 2 when the spring bias is overcome.

When the valve is actuated free flow is allowed in both directions.

Features

Hardened and ground poppet and seat with very low internal leakage

Sectional view

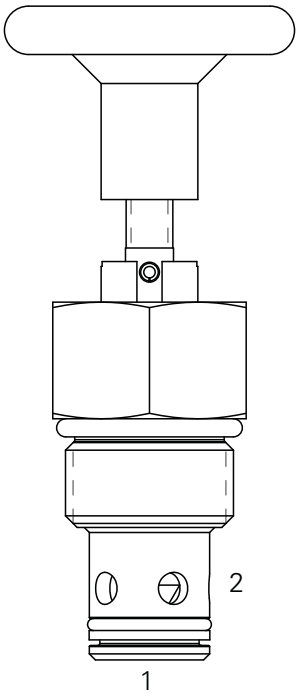

Performance data

Ratings and specifications

Performance data is typical with fluid at 21,8 cST (105 SUS) and 49°C (120°F)	
Typical application pressure (all ports)	210 bar (3000 psi)
Cartridge fatigue pressure (infinite life)	210 bar (3000 psi)
Rated flow	45 L/min (11.9 USgpm)
Internal leakage (port 2 to port 1)	5 drops/min. maximum @ 210 bar (3000 psi)
Temperature range	-40° to 120°C (-40° to 248°F)
Cavity	C-10-2
Fluids	All general purpose hydraulic fluids such as: MIL-H-5606, SAE 10, SAE 20 etc.
Filtration	Cleanliness code 18/**16/13**
Standard housing materials	Aluminum
Weight cartridge only	0,11 kg (0.24 lbs)
Seal kit	565803 (Buna-N), 566086 (Viton®)

Viton is a registered trademark of E.I. DuPont

Description

This is a manually operated, pull to open with detent normally closed none balanced poppet screw in cartridge valve. Ideal as an emergency lower valve.

Pressure drop

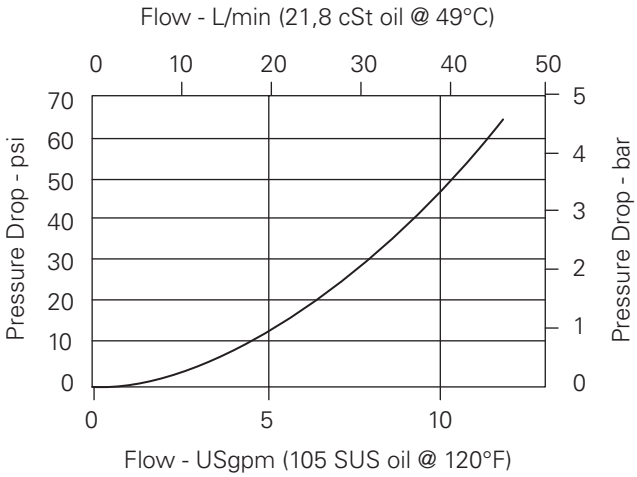

⚠ Warning

Back pressure of 16 bar (240 psi) will unseat the poppet.

Where measurements are critical request certified drawings. We reserve the right to change specifications without notice.

MPV3-10 - Manual pull valve

Normally closed valve
45 L/min (11.9 USgpm) • 210 bar (3000 psi)

Model code

MPV3 – 10 – * – ** – 00

1 2 3 4 5

1 Function

MPV1 - Manual pull valve with detent

2 Size

10 - 10 size

3 Seal material

Blank -Buna-N
V - Viton®

4 Port size

00 - Cartridge only

Code	Port size	Housing number	
		Aluminium light duty	Aluminium fatigue rated
3B	3/8" BSPP	02-175462	
6T	SAE 6	566151	
2G	1/4" BSPP	-	876702
3G	3/8" BSPP	-	876703
6H	SAE 6	-	876700
8H	SAE 8	-	876701

See section J for housing details.

5 Special features

00 - None
(Only required if valve has special features, omitted if "00.")

D

Dimensions

mm (inch)

Torque cartridge in aluminum housing
47-54 Nm (35-40 ft lbs)

Cartridge only

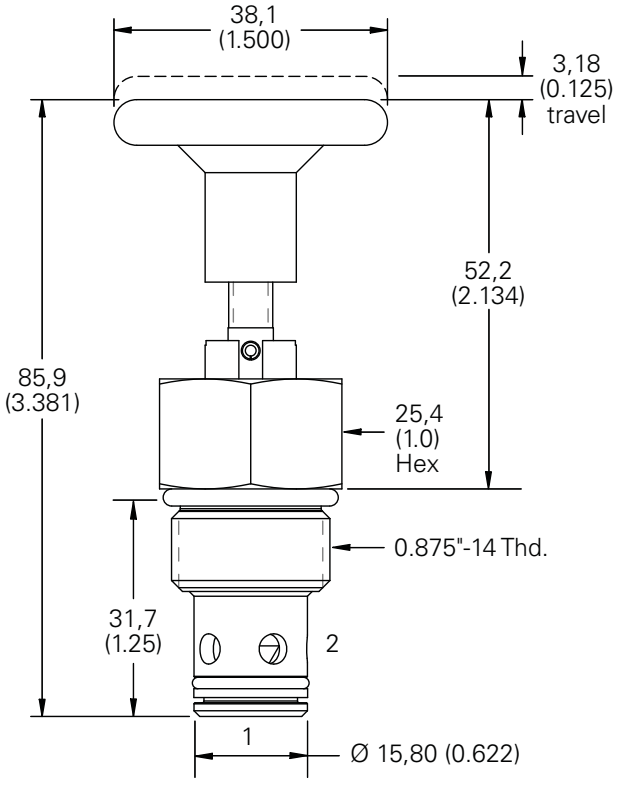

Installation drawing

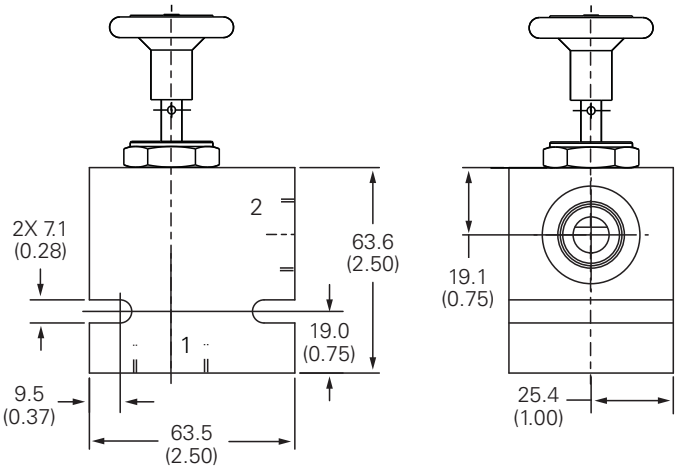

Where measurements are critical request certified drawings. We reserve the right to change specifications without notice.

MSV1-12 - Manual push valve

Push and twist directional control valve
41.8 L/min (11 USgpm) • 210 bar (3000 psi)

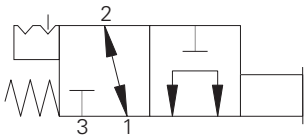

Operation

In the normal position, the valve allows flow from port 1 to port 2 while port 3 is blocked. In the actuated position, flow is allowed from port 3 to port 1 while port 2 is blocked.

Features

Hardened, ground and honed sleeve and spool for low internal leakage. Detent allows valve to be fixed in position

Sectional view

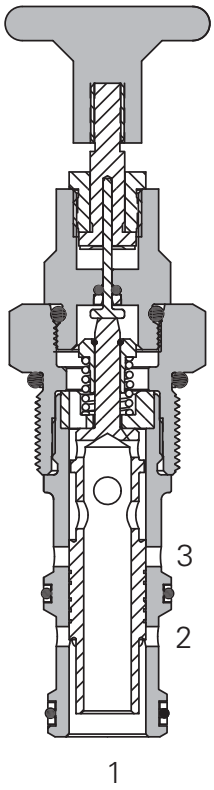

Description

This is a manually operated push and twist type 2 position 3 ported directional control valve. Ideal for isolating a system until flow is required.

Performance data

Ratings and specifications

Performance data is typical with fluid at 21,8 cST (105 SUS) and 49°C (120°F)	
Typical application pressure (all ports)	210 bar (3000 psi)
Cartridge fatigue pressure (infinite life)	210 bar (3000 psi)
Rated flow	41,8 L/min (11 USgpm)
Internal leakage	350 cc/min (21.5 in3/min)
Temperature range	-40° to 120°C (-40° to 248°F)
Cavity	C-12-3
Fluids	All general purpose hydraulic fluids such as: MIL-H-5606, SAE 10, SAE 20 etc.
Filtration	Cleanliness code 18/**16/13**
Standard housing materials	Aluminum
Weight cartridge only	0,29 kg (0.66 lbs)
Seal kit	9900171-000 (Buna-N), 9900172-000 (Viton®)

Viton is a registered trademark of E.I. DuPont

Pressure drop

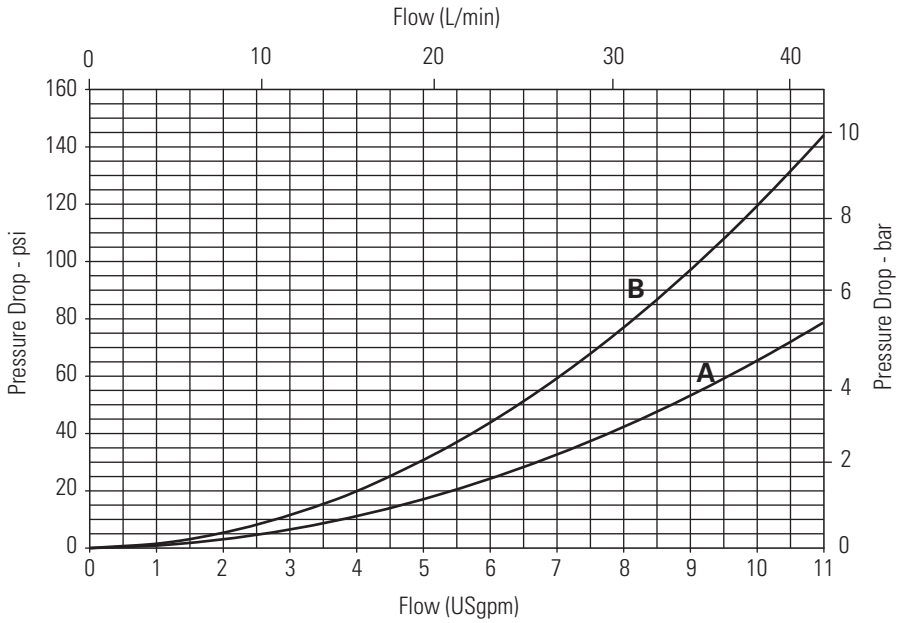

A - P1 to P2
B - P3 to P1

Where measurements are critical request certified drawings. We reserve the right to change specifications without notice.

MSV1-12 - Manual push valve

Push and twist directional control valve
41.8 L/min (11 USgpm) • 210 bar (3000 psi)

Model code

MSV1 – 12 – * – L – ** – **

1 2 3 4 5 6

1 Function
MSV1 - Manual push valve

2 Size
12 - 12 size

3 Seal material
Blank - Buna-N
V - Viton®

4 Actuation option
L - 2 position 'push and twist' actuation
E - Emergency stop actuation
N - No Detent

5 Port size
0 - Cartridge only

Code	Port size	Housing number
		Aluminium
A6G	3/4" BSPP	02-161816
A12H	SAE 12	02-160646

6 Special features
00 - None

(Only required if valve has special features, omitted if "00.")

Dimensions
mm (inch)

Torque cartridge in
aluminum housing
81-95 Nm (60-70 ft lbs)

Cartridge only

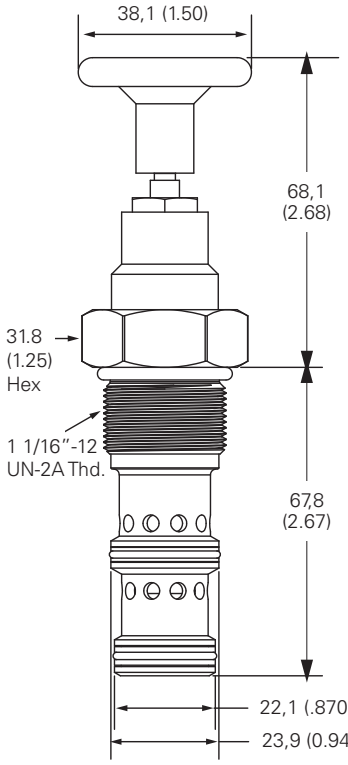

Installation drawing

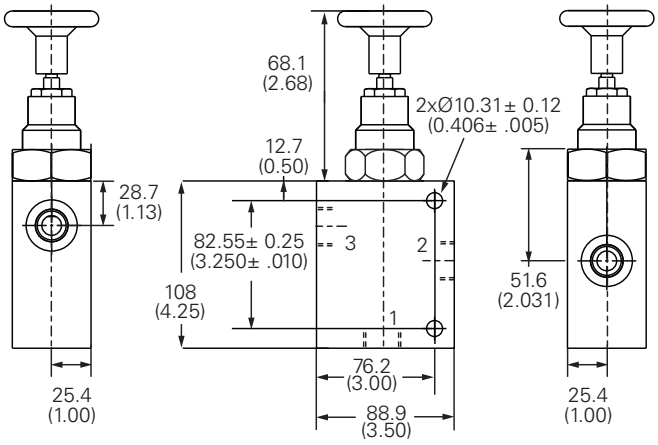

Where measurements are critical request certified drawings. We reserve the right to change specifications without notice.

MSV11-10 - Manual push valve

Push and twist directional control valve
23 L/min (6 USgpm) • 350 bar (5000 psi)

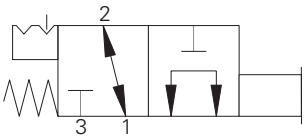

Operation

In the normal position, the valve allows flow from port 1 to port 2 while port 3 is blocked. In the actuated position, flow is allowed from port 3 to port 1 while port 2 is blocked.

Features

Hardened, ground and honed sleeve and spool for low internal leakage. Detent allows valve to be fixed in position. Working Pressure 350 bar.

Sectional view

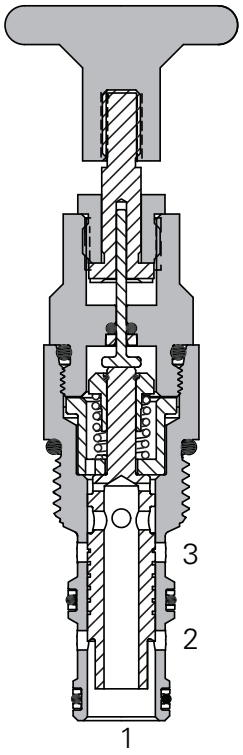

Description

This is a manually operated high pressure push and twist type 2 position 3 ported directional control valve. Ideal for isolating a system until flow is required.

Performance data

Ratings and specifications

Performance data is typical with fluid at 21,8 cST (105 SUS) and 49°C (120°F)	
Typical application pressure (all ports)	350 bar (5000 psi)
Cartridge fatigue pressure (infinite life)	350 bar (5000 psi)
Rated flow	23 L/min (6 USgpm)
Internal leakage	350 cc/min (21.5 in^3/min) @ 210 bar (3000 psi)
Temperature range	-40°to 120°C(-40° to 248°F)
Cavity	C-I0-3
Fluids	All general purpose hydraulic fluids such as: MIL-H-5606, SAE 10, SAE 20, etc.
Filtration	Cleanliness code 18/**16/13**
Standard housing materials	Aluminum and Steel
Weight cartridge only	0.25 kg (0.55 lbs)
Seal kit	889624 (Buna-N), 889628 (Viton®)

Viton is a registered trademark of E.I. DuPont

Pressure drop

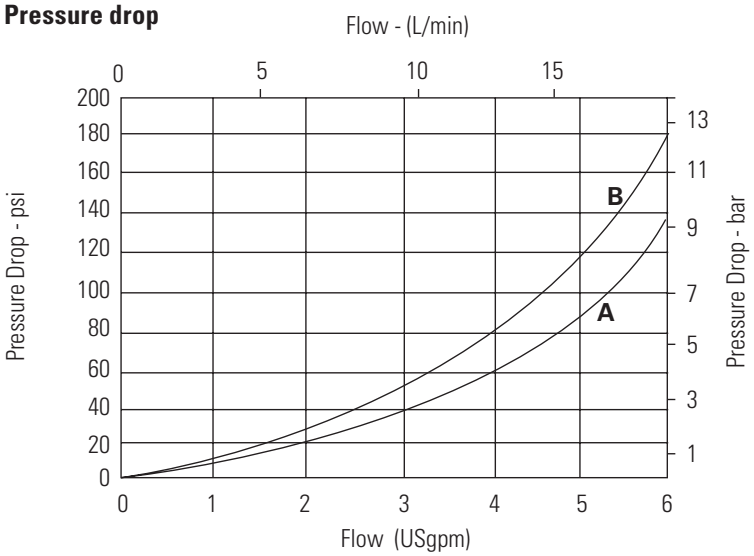

A - Port 1 to port 2
B - Port 3 to port 1

Where measurements are critical request certified drawings. We reserve the right to change specifications without notice.

MSV11-10 - Manual push valve

Push and twist directional control valve
23 L/min (6 USgpm) • 350 bar (5000 psi)

Model code

MSV11 – 10 (V) * – ** – ***

1 2 3 4 5 6

1 Function

MSV11 - 3-way, 2 position manual push valve

2 Size

10 - 10 size

3 Seals

Blank - Buna-N
V - Viton®

4 Actuation option

L - 2 position 'push and twist' actuation, with detent
E - Emergency stop actuation
N - No detent, momentary actuation
K - Push and twist

5 Port size

0 - Cartridge only

Code	Port size	Housing number	
0		**Aluminum**	**Steel**
A2G	1/4" BSPP	876705	
A3G	3/8" BSPP	876714	
A6H	SAE 6	876704	
A8H	SAE 8	876711	
S2G	1/4" BSPP		02-175127
S3G	3/8" BSPP		02-175128
S6T	SAE 6		02-175124
S8T	SAE 8		02-175125

See section J for housing details.

6 Special features

Blank - No special features

Dimensions
mm (inch)

Torque cartridge in housing
A - 47-54 Nm (35-40 ft. lbs)
S - 68-75 Nm (50-55 ft. lbs)

Cartridge only

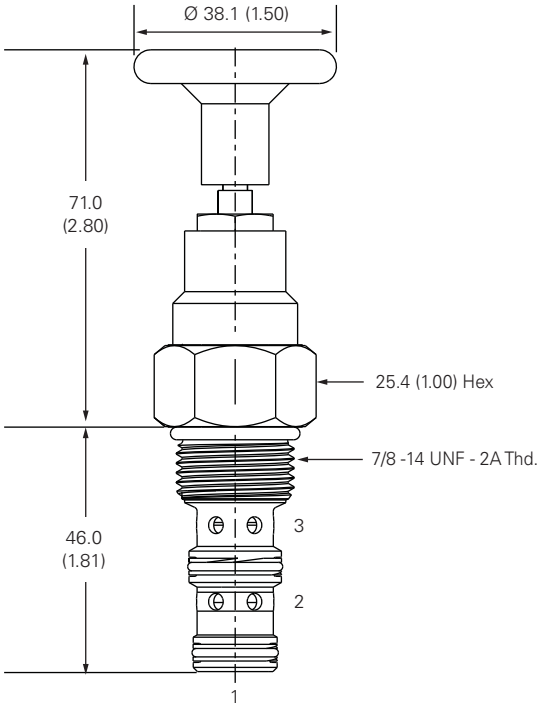

Installation drawing (steel)

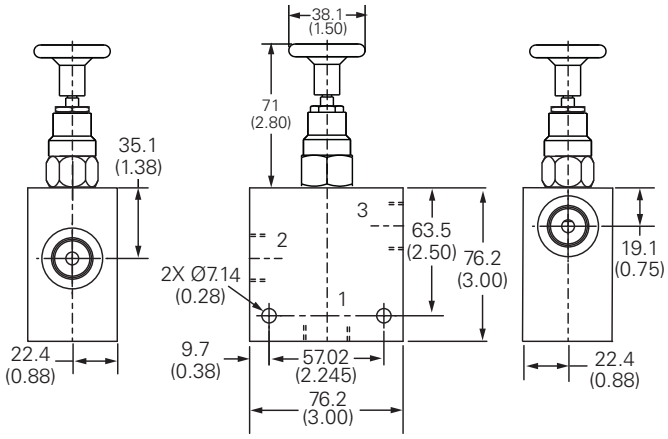

⚠ Warning

Aluminum housings can be used for pressures up to 210 bar (3000 psi). Steel housings must be used for operating pressures above 210 bar (3000 psi).

Where measurements are critical request certified drawings. We reserve the right to change specifications without notice.

MSV11-12 - Manual push valve

Push and twist directional control valve
30 L/min (8 USgpm) • 350 bar (5000 psi)

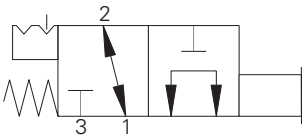

Operation

In the normal position, the valve allows flow from port 1 to port 2 while port 3 is blocked. In the actuated position, flow is allowed from port 3 to port 1 while port 2 is blocked.

Features

Hardened, ground and honed sleeve and spool for low internal leakage. Detent allows valve to be fixed in position. Working Pressure 350 bar.

Sectional view

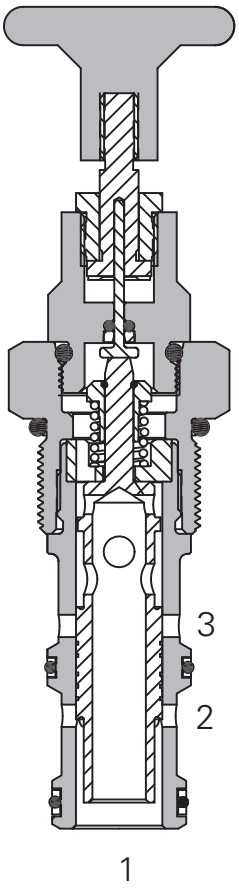

Description

This is a manually operated high pressure push and twist type 2 position 3 ported directional control valve. Ideal for isolating a system until flow is required.

Performance data

Ratings and specifications

Performance data is typical with fluid at 21,8 cST (105 SUS) and 49°C (120°F)	
Typical application pressure (all ports)	350 bar (5000 psi)
Cartridge fatigue pressure (infinite life)	350 bar (5000 psi)
Rated flow	30 L/min (8 USgpm)
Internal leakage	350 cc/min (21 in3/min) @ 350 bar (5000 psi)
Temperature range	-40° to 120°C (-40° to 248°F)
Cavity	C-12-3
Fluids	All general purpose hydraulic fluids such as: MIL-H-5606, SAE 10, SAE 20, etc.
Filtration	Cleanliness code 18/**16/13**
Standard housing materials	Aluminum and Steel
Weight cartridge only	0,29 kg (0.66 lbs)
Seal kit	9900171-000 (Buna-N), 9900172-000 (Viton®)

Viton is a registered trademark of E.I. DuPont

Pressure drop

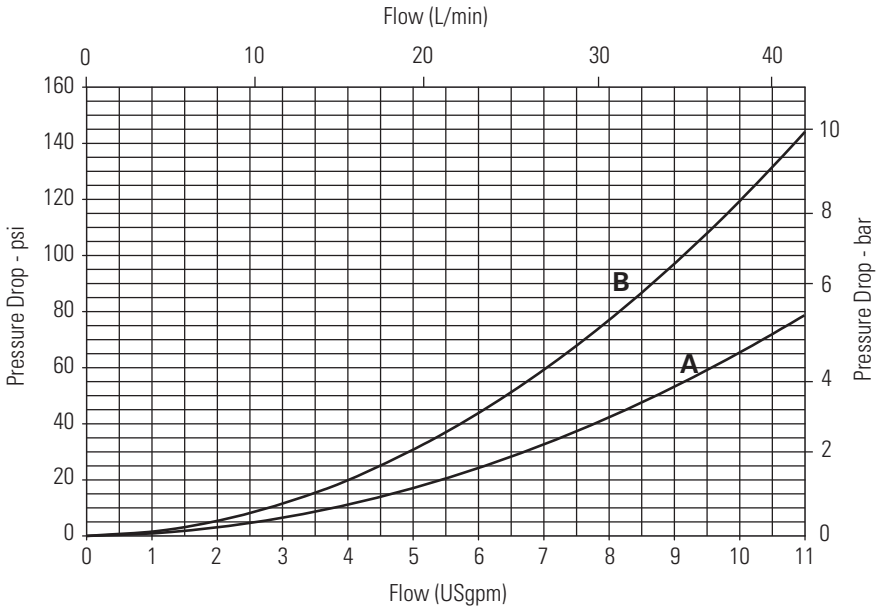

A - P1 to P2

B - P3 to P1

Where measurements are critical request certified drawings. We reserve the right to change specifications without notice.

MSV11-12 - Manual push valve

Push and twist directional control valve
30 L/min (8 USgpm) • 350 bar (5000 psi)

Model code

MSV11 – 12 (V) ** – ** – S**

1 2 3 4 5 6

1 Function
MSV11 - Manual push valve

2 Size
12 - 12 size

3 Seals
Blank - Buna-N
V - Viton®

4 Actuation option
L - 2 position, push & twist actuation, with detent.
E - Emergency stop actuation
N - No detent, momentary actuation
K - Push and twist

5 Port size
0 - Cartridge only

6 Valve housing material
Blank - Cartridge only
S - Steel

Code	Port size	Housing number	
0		**Aluminum**	**Steel**
A6G	3/4" BSPP	02-161816	
A12H	SAE 12	02-160646	
S4G	1/2" BSPP		02-169815
S6G	3/4" BSPP		02-169814
S10T	SAE 10		02-161070
S12T	SAE 12		02-169816

Dimensions
mm (inch)

Torque cartridge in housing
A - 81-95 Nm (60-70 ft. lbs)
S - 102-115 Nm (75-85 ft. lbs)

Cartridge only

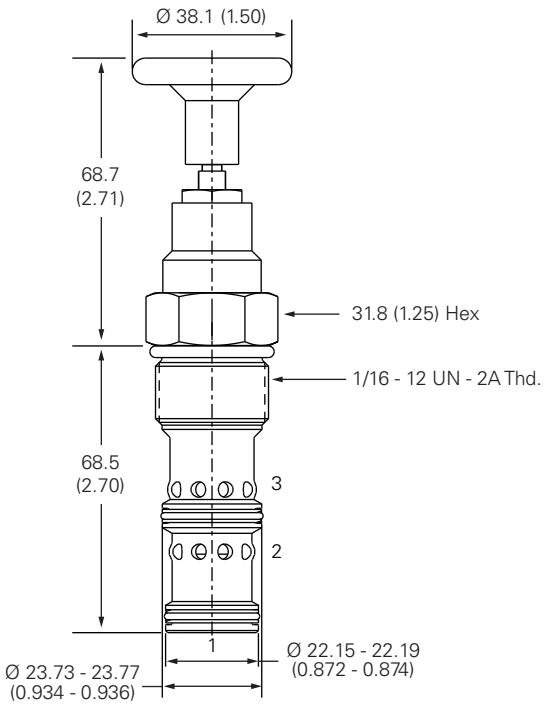

Installation drawing (steel)

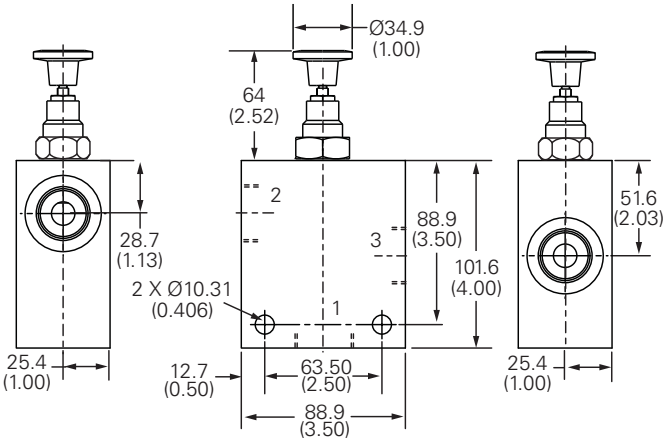

⚠ Warning

Aluminum housings can be used for pressures up to 210 bar (3000 psi). Steel housings must be used for operating pressures above 210 bar (3000 psi).

Where measurements are critical request certified drawings. We reserve the right to change specifications without notice.

MSV2-12 - Manual push valve

Push and twist directional control valve
38 L/min (10 USgpm) • 210 bar (3000 psi)

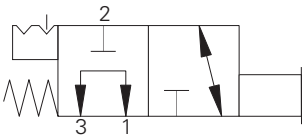

Operation

In the normal position, the valve allows flow from port 1 to port 3 while port 2 is blocked. In the actuated position, flow is allowed from port 2 to port 1 while port 3 is blocked.

Features

Hardened, ground and honed sleeve and spool for low internal leakage. Detent allows valve to be fixed in position

Sectional view

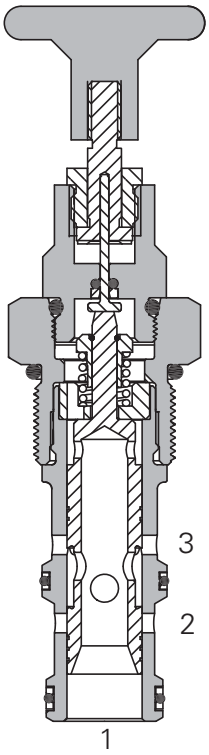

Description

This is a manually operated push and twist type 2 position 3 ported directional control valve. Ideal for isolating a system until flow is required.

Performance data

Ratings and specifications

Performance data is typical with fluid at 21,8 cST (105 SUS) and 49°C (120°F)	
Typical application pressure (all ports)	210 bar (3000 psi)
Cartridge fatigue pressure (infinite life)	210 bar (3000 psi)
Rated flow	38 L/min (10 USgpm)
Internal leakage	350 cc/min (21.5 in3/min)
Temperature range	-40° to 120°C (-40° to 248°F)
Cavity	C-12-3
Fluids	All general purpose hydraulic fluids such as: MIL-H-5606, SAE 10, SAE 20 etc.
Filtration	Cleanliness code 18/**16/13**
Standard housing materials	Aluminum
Weight cartridge only	0,29 kg (0.66 lbs)
Seal kit	9900171-000 (Buna-N), 9900172-000 (Viton®)

Viton is a registered trademark of E.I. DuPont

Pressure drop

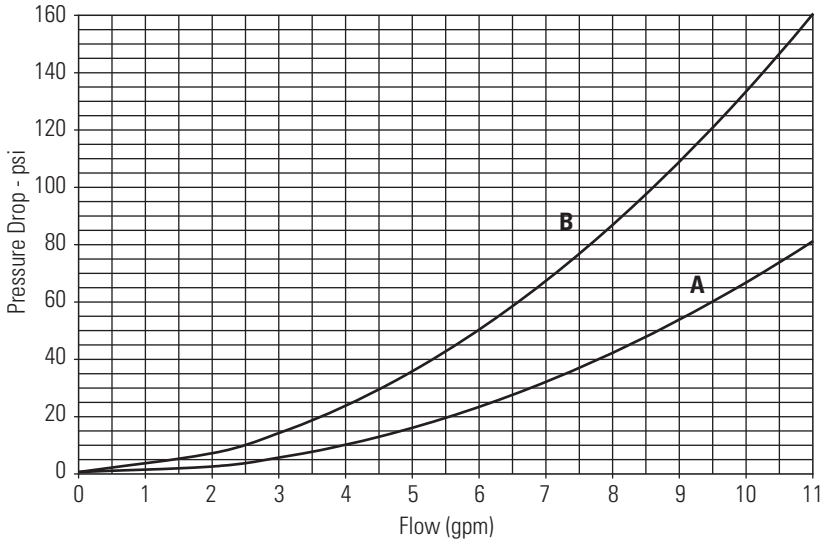

A - P2 to P1
B - P1 to P3

Where measurements are critical request certified drawings. We reserve the right to change specifications without notice.

MSV2-12 - Manual push valve

Push and twist directional control valve
38 L/min (10 USgpm) • 210 bar (3000 psi)

Model code

MSV2 – 12 * – L – ** – **

1 2 3 4 5 6

1 Function

MSV1 - Manual push valve
3-way, 2 position

2 Size

12 - 12 size

3 Seal material

Blank - Buna-N
V - Viton®

4 Actuation option

L - 2 position 'push and twist' actuation
E - Emergency stop actuation
N - No Detent

5 Port size

0 - Cartridge only

Code	Port size	Housing number
		Aluminum
A6G	3/4" BSPP	02-161816
A12H	SAE 12	02-160646

6 Special features

Blank - No special features

D

Dimensions
mm (inch)

Torque cartridge in
aluminum housing
81-95 Nm (60-70 ft lbs)

Cartridge only

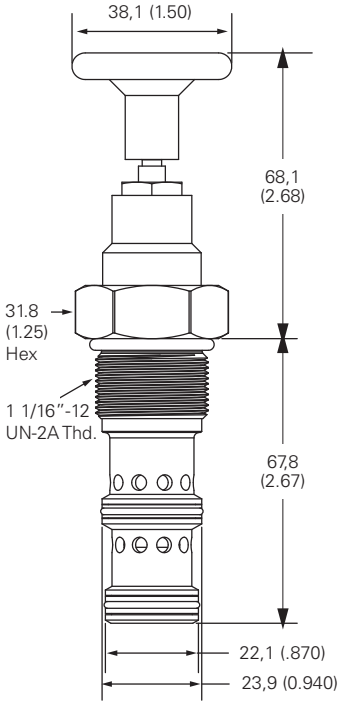

Installation drawing

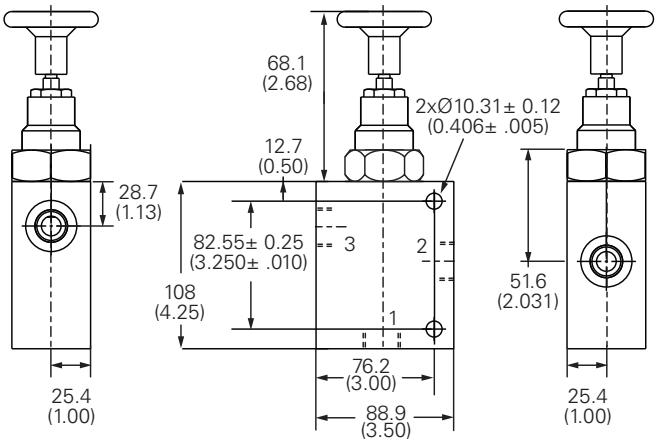

Where measurements are critical request certified drawings. We reserve the right to change specifications without notice.

MSV12-12 - Manual push valve

Push and twist directional control valve
38 L/min (10 USgpm) • 350 bar (5000 psi)

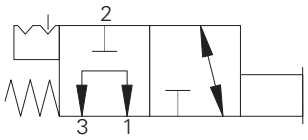

Operation

In the normal position, the valve allows flow from port 1 to port 2 while port 3 is blocked. In the actuated position, flow is allowed from port 3 to port 1 while port 2 is blocked.

Features

Hardened, ground and honed sleeve and spool for low internal leakage. Detent allows valve to be fixed in position. Working Pressure 350 bar.

Sectional view

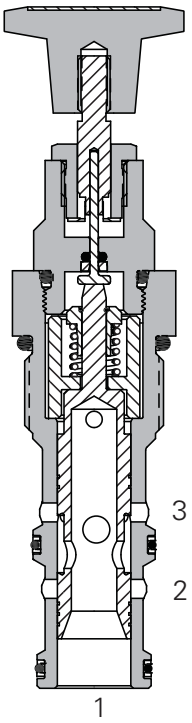

Performance data

Ratings and specifications

Performance data is typical with fluid at 21,8 cST (105 SUS) and 49°C (120°F)	
Typical application pressure (all ports)	350 bar (5000 psi)
Cartridge fatigue pressure (infinite life)	350 bar (5000 psi)
Rated flow	38 L/min (10 USgpm)
Internal leakage	350 cc/min (21.5 in^3/min) @ 210 bar (3000 psi)
Temperature range	-40°to 120°C(-40° to 248°F)
Cavity	C-I2-3
Fluids	All general purpose hydraulic fluids such as: MIL-H-5606, SAE 10, SAE 20, etc.
Filtration	Cleanliness code 18/**16/13**
Standard housing materials	Aluminum and Steel
Weight cartridge only	0,29 kg (0.66 lbs)
Seal kit	9900171-000 (Buna-N), 9900172-000 (Viton®)

Viton is a registered trademark of E.I. DuPont

Description

This is a manually operated high pressure push and twist type 2 position 3 ported directional control valve. Ideal for isolating a system until flow is required.

Pressure drop

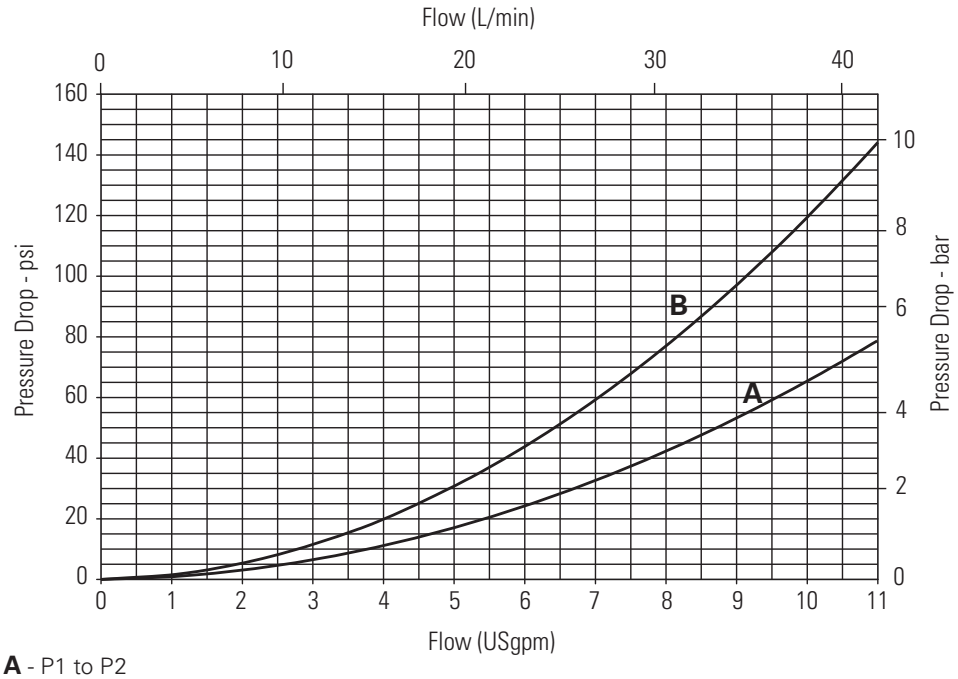

A - P1 to P2

B - P3 to P1

Where measurements are critical request certified drawings. We reserve the right to change specifications without notice.

MSV12-12 - Manual push valve

Push and twist directional control valve
38 L/min (10 USgpm) • 350 bar (5000 psi)

Model code

MSV12 – 12 V – * – ** – ***

1 2 3 4 5 6

1 Function

MSV12 - 3-way, 2 position manual push valve

2 Size

12 - 12 size

3 Seals

Blank - Buna-N
V - Viton®

4 Actuation option

L - 2 position 'push and twist' actuation, with detent
E - Emergency stop actuation
N - No detent, momentary actuation
K - Push and twist

5 Port size

0 - Cartridge only

6 Special features

Blank - No special features

Code	Port size	Housing number	
0		**Aluminum**	**Steel**
A6G	3/4" BSPP	02-161816	
A12H	SAE 12	02-160646	
S4G	1/2" BSPP	02-169815	
S6G	3/4" BSPP	02-169814	
S10H	SAE 10		02-161070
S12H	SAE 12		02-169816

See section J for housing details.

Dimensions
mm (inch)

Torque cartridge in housing
A - 81-95 Nm (60-70 ft. lbs)
S - 102-115 Nm (75-85 ft. lbs)

Cartridge only

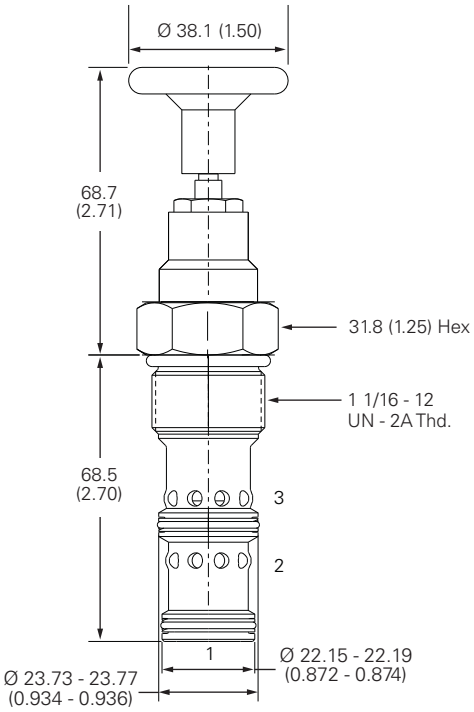

Installation drawing (steel)

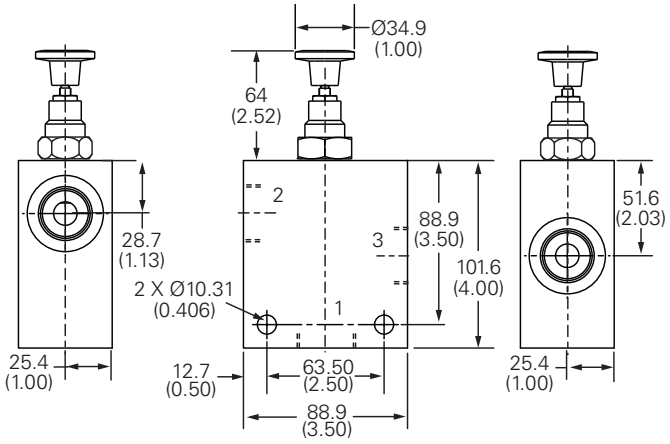

⚠ Warning

Aluminum housings can be used for pressures up to 210 bar (3000 psi). Steel housings must be used for operating pressures above 210 bar (3000 psi).

Where measurements are critical request certified drawings. We reserve the right to change specifications without notice.

MSV5-12 - Manual push valve

Push and twist directional control valve
41.8 L/min (11 USgpm) • 210 bar (3000 psi)

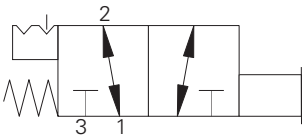

Operation

In the normal position, the valve allows flow from port 2 to port 1 while port 3 is blocked. In the actuated position, flow is allowed from port 3 to port 2 while port 1 is blocked.

Features

Hardened, ground and honed sleeve and spool for low internal leakage. Detent allows valve to be fixed in position

Sectional view

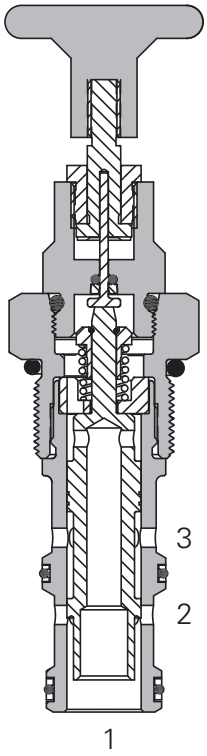

Performance data

Ratings and specifications

Performance data is typical with fluid at 21,8 cST (105 SUS) and 49°C (120°F)	
Typical application pressure (all ports)	210 bar (3000 psi)
Cartridge fatigue pressure (infinite life)	210 bar (3000 psi)
Rated flow	41.8 L/min (11 USgpm)
Internal leakage	350 cc/min (21.5 in3/min)
Temperature range	-40° to 120°C (-40° to 248°F)
Cavity	C-12-3
Fluids	All general purpose hydraulic fluids such as: MIL-H-5606, SAE 10, SAE 20 etc.
Filtration	Cleanliness code 18/**16/13**
Standard housing materials	Aluminum
Weight cartridge only	0,29 kg (0.66 lbs)
Seal kit	9900171-000 (Buna-N), 9900172-000 (Viton®)

Viton is a registered trademark of E.I. DuPont

Description

This is a manually operated push and twist type 2 position 3 ported directional control valve. Ideal for isolating a system until flow is required.

Pressure drop

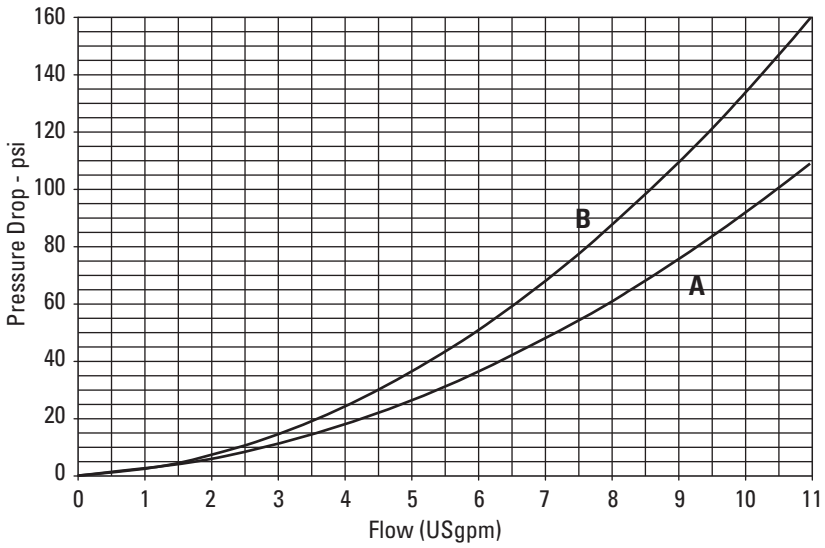

A - P2 to P1
B - P3 to P2

Where measurements are critical request certified drawings. We reserve the right to change specifications without notice.

MSV5-12 - Manual push valve

Push and twist directional control valve
41.8 L/min (11 USgpm) • 210 bar (3000 psi)

Model code

MSV5 – 12 * – L – ** – **

1 2 3 4 5 6

1 Function

MSV5 - 3 way, 2 position Manual push valve

2 Size

12 - 12 size

3 Seal material

Blank - Buna-N
V - Viton®

4 Actuation option

L - 2 position 'push and twist' actuation
E - Emergency stop actuation
N - No Detent

5 Port size

0 - Cartridge only

Code	Port size	Housing number
		Aluminum
A6G	3/4" BSPP	02-161816
A12H	SAE 12	02-160646

6 Special features

Blank - No special features

Dimensions

mm (inch)

Torque cartridge in aluminum housing
81-95 Nm (60-70 ft lbs)

Cartridge only

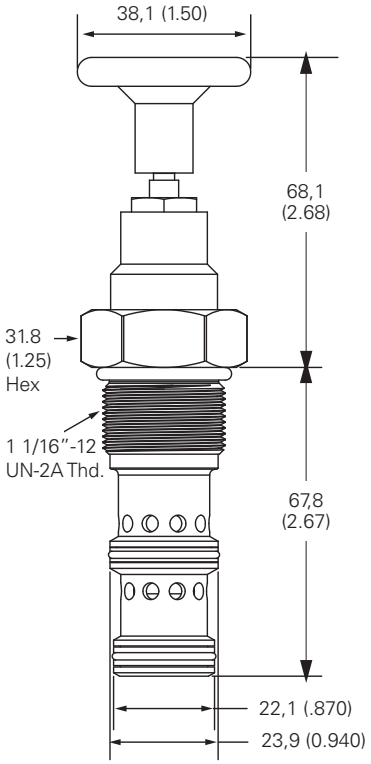

Installation drawing

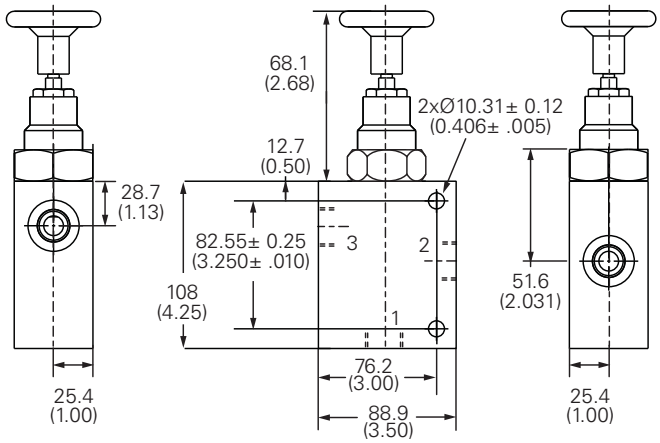

Where measurements are critical request certified drawings. We reserve the right to change specifications without notice.

MSV15-12 - Manual push valve

Push and twist directional control valve
41.8 L/min (11 USgpm) • 350 bar (5000 psi)

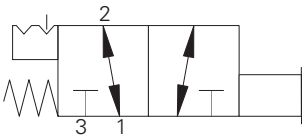

Operation

In the normal position, the valve allows flow from port 2 to port 1 while port 3 is blocked. In the actuated position, flow is allowed from port 3 to port 2 while port 1 is blocked.

Features

Hardened, ground and honed sleeve and spool for low internal leakage. Detent allows valve to be fixed in position. Working Pressure 350 bar.

Sectional view

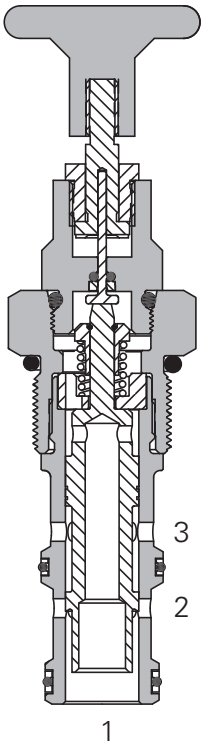

Description

This is a manually operated high pressure push and twist type 2 position 3 ported directional control valve. Ideal for isolating a system until flow is required.

Performance data

Ratings and specifications

Performance data is typical with fluid at 21,8 cST (105 SUS) and 49°C (120°F)	
Typical application pressure (all ports)	350 bar (5000 psi)
Cartridge fatigue pressure (infinite life)	350 bar (5000 psi)
Rated flow	41,8 L/min (11 USgpm)
Internal leakage	350 cc/min (21.5 in^3/min)
Temperature range	-40°to 120°C(-40° to 248°F)
Cavity	C-I2-3
Fluids	All general purpose hydraulic fluids such as: MIL-H-5606, SAE 10, SAE 20, etc.
Filtration	Cleanliness code 18/**16/13**
Standard housing materials	Steel
Weight cartridge only	0,29 kg (0.66 lbs)
Seal kit	9900171-000 (Buna-N), 9900172-000 (Viton®)

Viton is a registered trademark of E.I. DuPont

Pressure drop

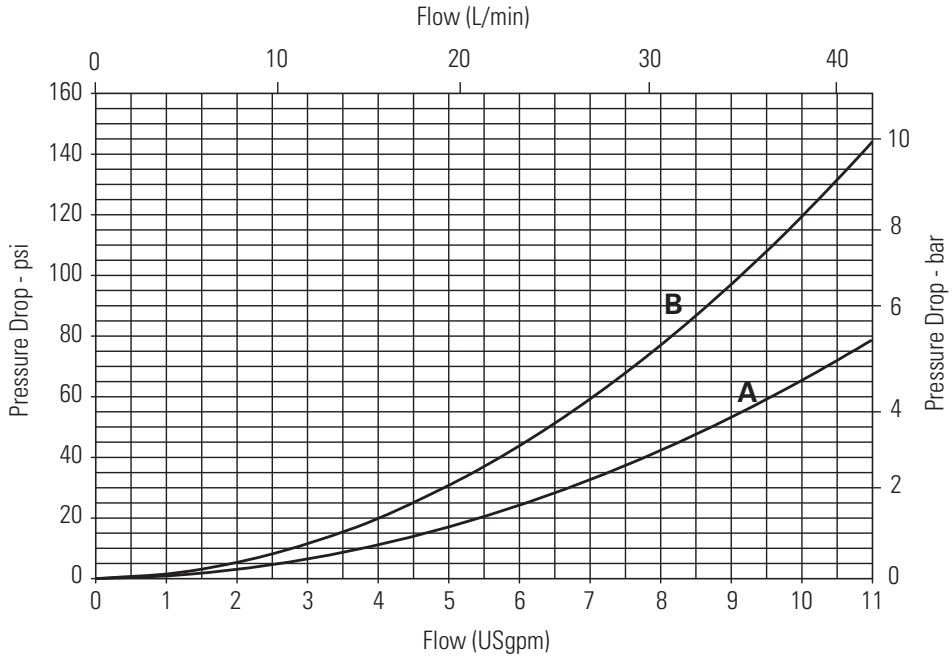

A - P2 to P1

B - P3 to P2

Where measurements are critical request certified drawings. We reserve the right to change specifications without notice.

MSV15-12 - Manual push valve

Push and twist directional control valve
41.8 L/min (11 USgpm) • 350 bar (5000 psi)

Model code

MSV15 – 12 * – * – ** – ***

1 2 3 4 5 6

1 Function

MSV15 - 3-way, 2 position manual push valve

2 Size

12 - 12 size

3 Seals

Blank - Buna-N
V - Viton®

4 Actuation option

L - 2 position 'push and twist' actuation, with detent
E - Emergency stop actuation
N - No detent, momentary actuation
K - Push and twist

5 Port size

0 - Cartridge only

6 Special features

Blank - No special features

Code	Port size	Housing number	
0		**Aluminum**	**Steel**
A6G	3/4" BSPP	02-161816	
A12H	SAE 12	02-160646	
S4G	1/2" BSPP		02-169815
S6G	3/4" BSPP		02-169814
S10T	SAE 10		02-161070
S12T	SAE 12		02-169816

See section J for housing details.

Dimensions

mm (inch)

Torque cartridge in housing

A - 81-95 Nm (60-70 ft. lbs)
S - 102-115 Nm (75-85 ft. lbs)

Cartridge only

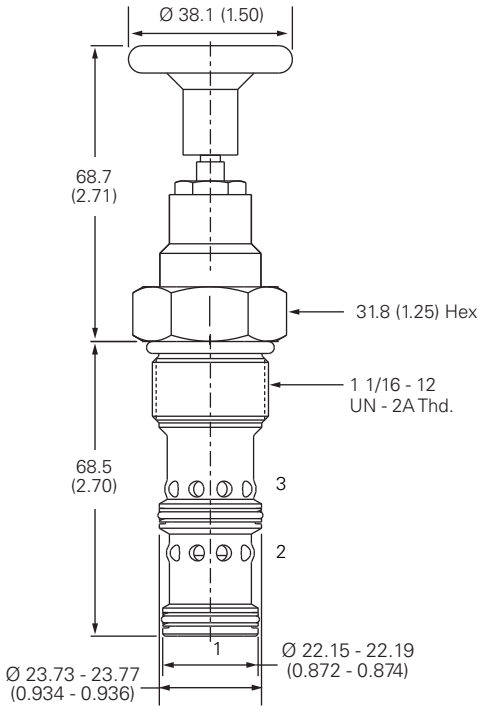

Installation drawing (steel)

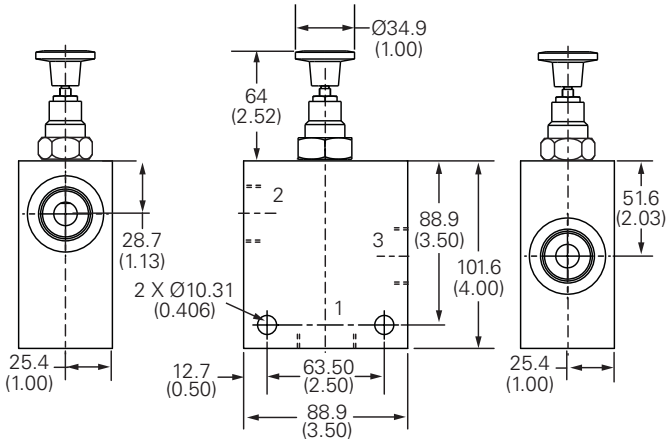

⚠ Warning

Aluminum housings can be used for pressures up to 210 bar (3000 psi). Steel housings must be used for operating pressures above 210 bar (3000 psi).

Where measurements are critical request certified drawings. We reserve the right to change specifications without notice.

MSV3-12 - Manual push valve

Push and twist, normally closed, directional control valve
53,2 L/min (14 USgpm) • 210 bar (3000 psi)

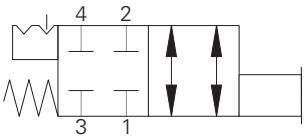

Operation

In the normal position, all ports are blocked. In the actuated position, flow is allowed from port 3 to port 4 and from port 2 to port 1.

Features

Hardened, ground and honed sleeve and spool for low internal leakage. Detent allows valve to be fixed in position

Sectional view

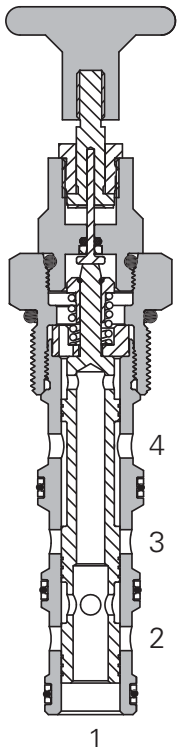

Description

This valve is a manually operated push and twist to switch, normally closed 2 position 4 ported directional valve. This is ideal for isolating an actuator.

Performance data

Ratings and specifications

Performance data is typical with fluid at 21,8 cST (105 SUS) and 49°C (120°F)	
Typical application pressure (all ports)	210 bar (3000 psi)
Cartridge fatigue pressure (infinite life)	210 bar (3000 psi)
Rated flow	53,2 L/min (14 USgpm)
Internal leakage	350 cc/min (21.5 in3/min) @ 210 bar (3000 psi)
Temperature range	-40° to 120°C (-40° to 248°F)
Cavity	C-12-4
Fluids	All general purpose hydraulic fluids such as: MIL-H-5606, SAE 10, SAE 20 etc.
Filtration	Cleanliness code 18/**16/13**
Standard housing materials	Aluminum
Weight cartridge only	0,32 kg (0.71 lbs)
Seal kit	02-160979 (Buna-N), 02-160980 (Viton®)

Viton is a registered trademark of E.I. DuPont

Pressure drop

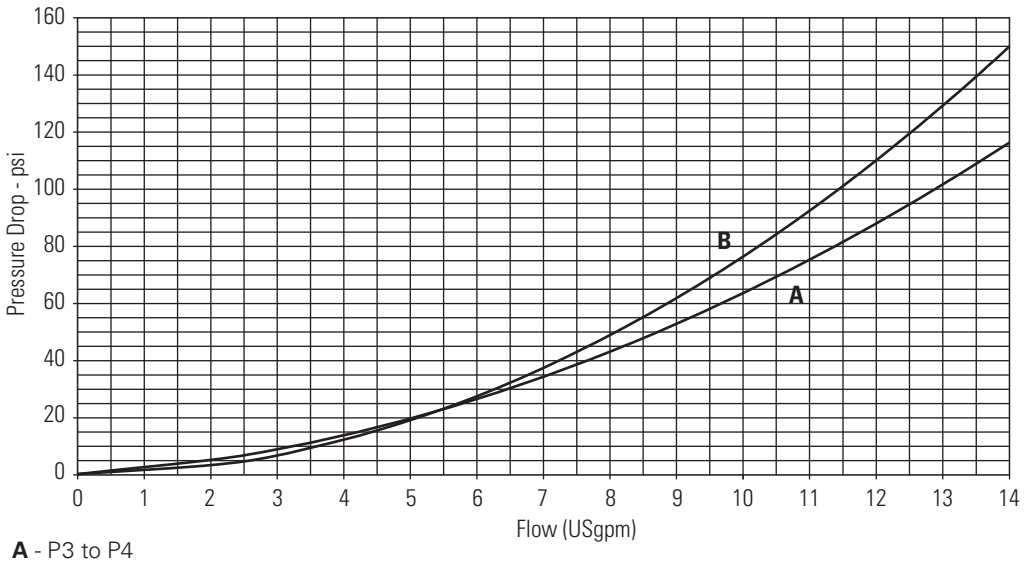

A - P3 to P4
B - P2 to P1

Where measurements are critical request certified drawings. We reserve the right to change specifications without notice.

MSV3-12 - Manual push valve

Push and twist, normally closed, directional control valve
53,2 L/min (14 USgpm) • 210 bar (3000 psi)

Model code

MSV3 – 12 * – L – ** – **

1 2 3 4 5 6

1 Function

MSV3 - 4 way, 2 position
Manual push valve

2 Size

12 - 12 size

3 Seal material

Blank - Buna-N
V -Viton®

4 Actuation option

L - 2 position 'push and twist' actuation
E - Emergency stop actuation
N - No Detent

5 Port size

0 - Cartridge only

Code	Port size	Housing number
		Aluminium
A6G	3/4" BSPP	5986432-001
A10T	SAE 10	6030517-001
A12H	SAE 12	5986436-001

6 Special features

Blank - No special features

D

Dimensions

mm (inch)

Torque cartridge in
aluminum housing
81-95 Nm (60-70 ft lbs)

Cartridge only

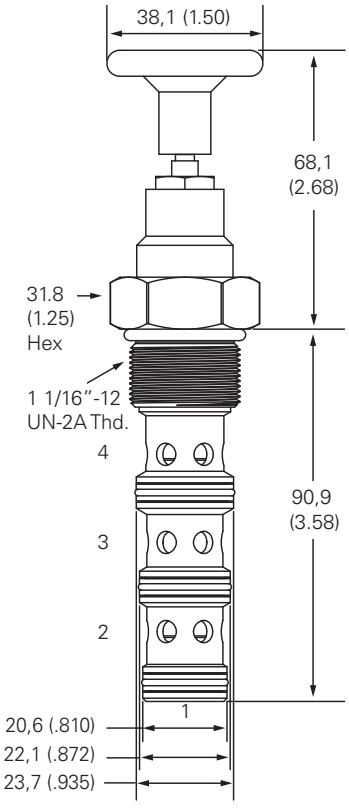

Installation drawing

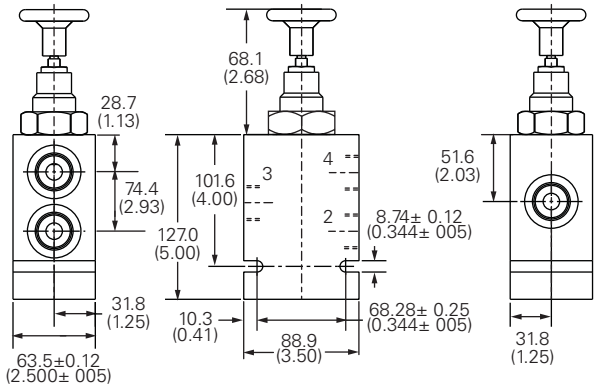

Where measurements are critical request certified drawings. We reserve the right to change specifications without notice.

MSV13-12 - Manual push valve

Push and twist, normally closed, directional control valve
53,2 L/min (14 USgpm) • 350 bar (5000 psi)

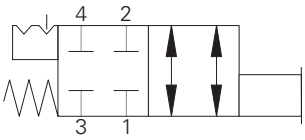

Operation

In the normal position, all ports are blocked. In the actuated position, flow is allowed from port 3 to port 4 and from port 2 to port 1.

Features

Hardened, ground and honed sleeve and spool for low internal leakage. Detent allows valve to be fixed in position. Working Pressure 350 bar.

Sectional view

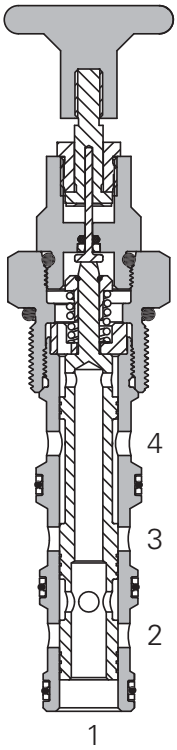

Description

This valve is a manually operated high pressure push and twist to switch, normally closed 2 position 4 ported directional valve. This is ideal for isolating an actuator.

Performance data

Ratings and specifications

Performance data is typical with fluid at 21,8 cST (105 SUS) and 49°C (120°F)	
Typical application pressure (all ports)	350 bar (5000 psi)
Cartridge fatigue pressure (infinite life)	350 bar (5000 psi)
Rated flow	53,2 L/min (14 USgpm)
Internal leakage	350 cc/min (21.5 in^3/min) @ 210 bar (3000 psi)
Temperature range	-40°to 120°C(-40° to 248°F)
Cavity	C-I2-4
Fluids	All general purpose hydraulic fluids such as: MIL-H-5606, SAE 10, SAE 20, etc.
Filtration	Cleanliness code 18/**16/13**
Standard housing materials	Aluminum or Steel
Weight cartridge only	0,32 kg (0.71 lbs)
Seal kit	02-160979 (Buna-N), 02-160980 (Viton®)

Viton is a registered trademark of E.I. DuPont

Pressure drop

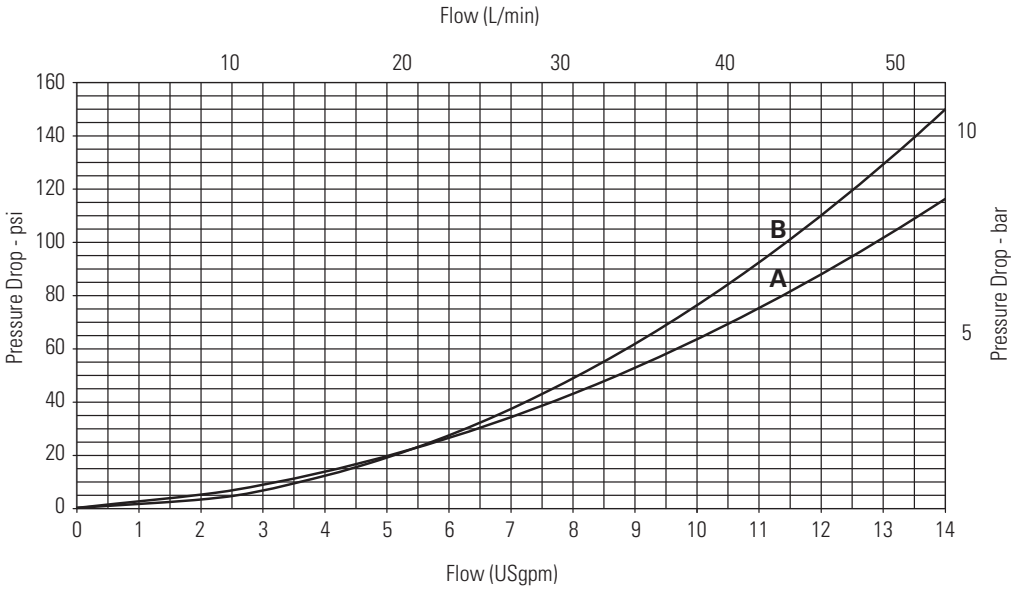

A - P3 to P4

B - P2 to P1

Where measurements are critical request certified drawings. We reserve the right to change specifications without notice.

MSV13-12 - Manual push valve

Push and twist, normally closed, directional control valve
53,2 L/min (14 USgpm) • 350 bar (5000 psi)

Model code

MSV13 – 12 * – * – ** – ***

1 2 3 4 5 6

1 Function

MSV13 - 4-way, 2 position manual push valve

2 Size

12 - 12 size

3 Seals

Blank - Buna-N
V - Viton®

4 Actuation option

L - 2 position 'push and twist' actuation, with detent
E - Emergency stop actuation
N - No detent, momentary actuation
K - Push and twist

5 Port size

0 - Cartridge only

Code	Port size	Housing number	
0		**Aluminum**	**Steel**
A6G	3/4" BSPP	5986432-001	
A10H	SAE 10	5986434-001	
A12H	SAE 12	5986436-001	
S6G	3/4" BSPP		5991073-001
S10T	SAE 10		5991074-001
S12T	SAE 12		5991075-001

See section J for housing details.

6 Special features

Blank - No special features

Dimensions

mm (inch)

Torque cartridge in housing

A - 81-95 Nm (60-70 ft. lbs)
S - 102-115 Nm (75-85 ft. lbs)

Cartridge only

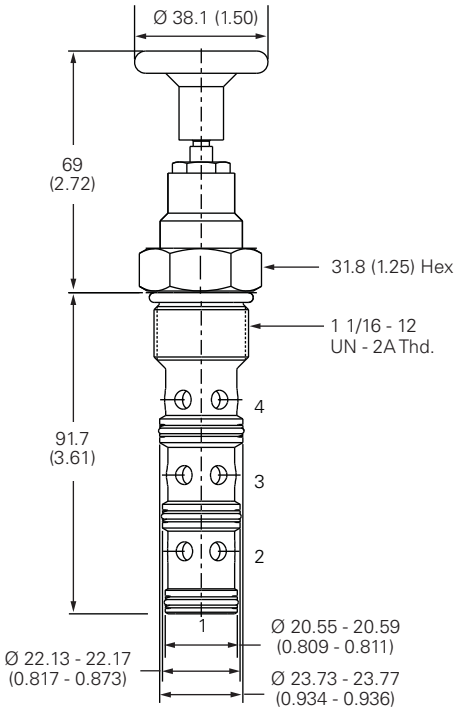

Installation drawing

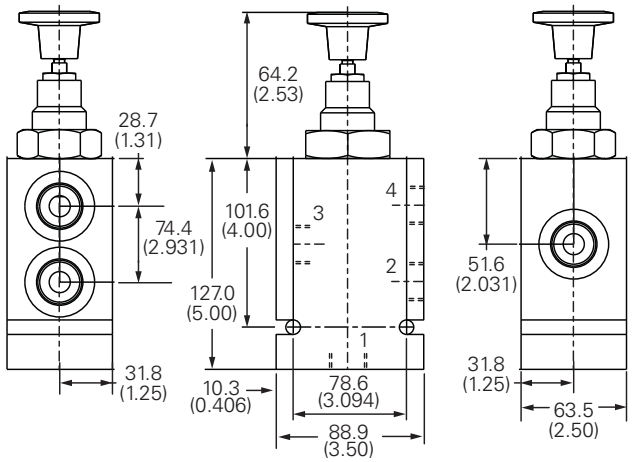

⚠ Warning

Aluminum housings can be used for pressures up to 210 bar (3000 psi). Steel housings must be used for operating pressures above 210 bar (3000 psi).

Where measurements are critical request certified drawings. We reserve the right to change specifications without notice.

MSV4-12 - Manual push valve

Push and twist, normally open, directional control valve
53,2 L/min (14 USgpm) • 210 bar (3000 psi)

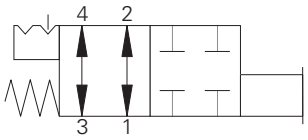

Operation

In the normal position, flow is allowed from port 3 to port 4 and from port 2 to port 1. In the actuated position, all ports are blocked.

Features

Hardened, ground and honed sleeve and spool for low internal leakage. Detent allows valve to be fixed in position

Sectional view

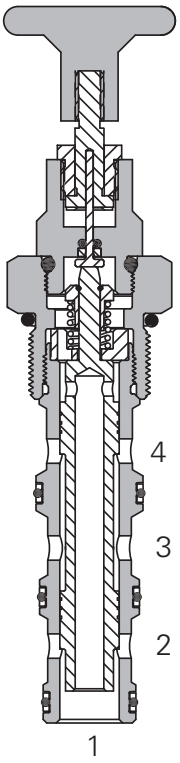

Performance data

Ratings and specifications

Performance data is typical with fluid at 21,8 cST (105 SUS) and 49°C (120°F)	
Typical application pressure (all ports)	210 bar (3000 psi)
Cartridge fatigue pressure (infinite life)	210 bar (3000 psi)
Rated flow	53,2 L/min (14 USgpm)
Internal leakage	350 cc/min (21.5 in3/min)
Temperature range	-40° to 120°C (-40° to 248°F)
Cavity	C-12-4
Fluids	All general purpose hydraulic fluids such as: MIL-H-5606, SAE 10, SAE 20 etc.
Filtration	Cleanliness code 18/**16/13**
Standard housing materials	Aluminum
Weight cartridge only	0,32 kg (0.71 lbs)
Seal kit	02-160979 (Buna-N), 02-160980 (Viton®)

Viton is a registered trademark of E.I. DuPont

Description

This valve is a manually operated push and twist to switch, normally open 2 position 4 ported directional valve. This is ideal for isolating an actuator.

Pressure drop

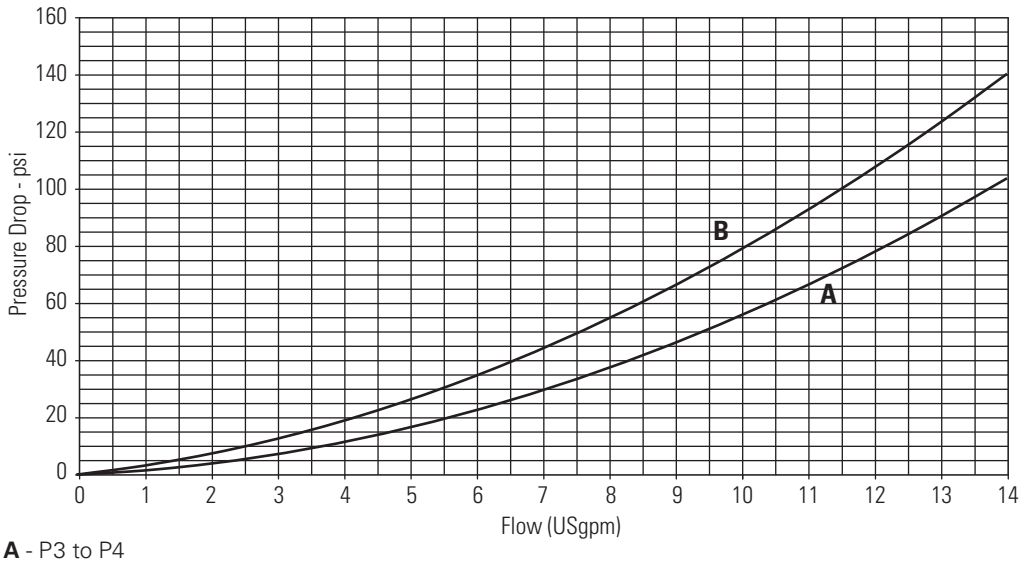

A - P3 to P4
B - P2 to P1

Where measurements are critical request certified drawings. We reserve the right to change specifications without notice.

MSV4-12 - Manual push valve

Push and twist, normally open, directional control valve
53,2 L/min (14 USgpm) • 210 bar (3000 psi)

Model code

MSV4 – 12 * – L – ** – **

1 2 3 4 5 6

1 Function

MSV4 - 4-way, 2 position, Manual push valve

2 Size

12 - 12 size

3 Seal material

Blank - Buna-N
V - Viton®

4 Actuation option

L - 2 position 'push and twist' actuation
E - Emergency stop actuation
N - No Detent

5 Port size

0 -Cartridge only

Code	Port size	Housing number
		Aluminium
A6G	3/4" BSPP	5986432-001
A10T	SAE 10	6030517-001
A12H	SAE 12	5986436-001

6 Special features

Blank - No special features

D

Dimensions
mm (inch)

Torque cartridge in aluminum housing
81-95 Nm (60-70 ft lbs)

Cartridge only

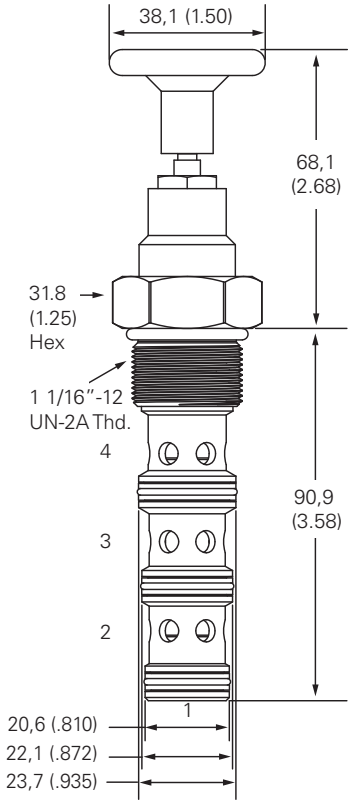

Installation drawing

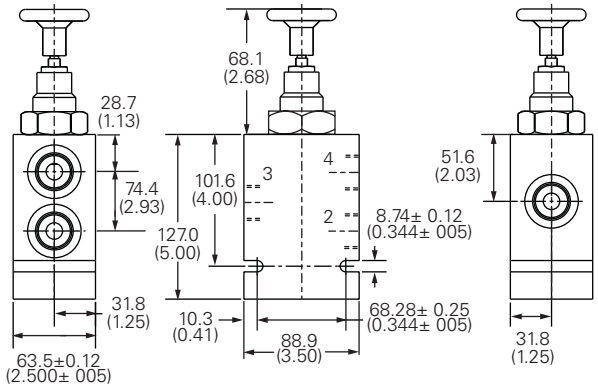

Where measurements are critical request certified drawings. We reserve the right to change specifications without notice.

MSV14-12 - Manual push valve

Push and twist, normally open, directional control valve
53,2 L/min (14 USgpm) • 350 bar (5000 psi)

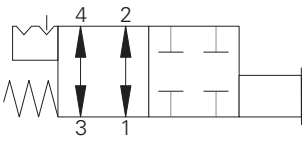

Operation

In the normal position, flow is allowed from port 3 to port 4 and from port 2 to port 1. In the actuated position, all ports are blocked.

Features

Hardened, ground and honed sleeve and spool for low internal leakage. Detent allows valve to be fixed in position. Working Pressure 350 bar.

Sectional view

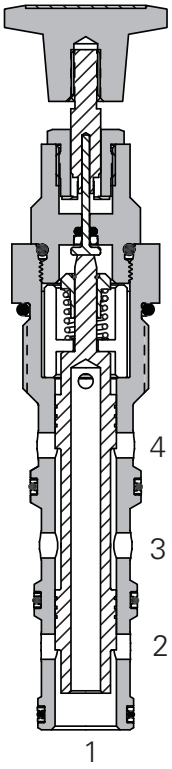

Description

This valve is a manually operated high pressure push and twist to switch, normally open 2 position 4 ported directional valve. This is ideal for isolating an actuator.

Performance data

Ratings and specifications

Performance data is typical with fluid at 21,8 cST (105 SUS) and 49°C (120°F)	
Typical application pressure (all ports)	350 bar (5000 psi)
Cartridge fatigue pressure (infinite life)	350 bar (5000 psi)
Rated flow	53,2 L/min (14 USgpm)
Internal leakage	350 cc/min (21 in^3/min) @ 219 bar (3000 psi)
Temperature range	-40°to 120°C(-40° to 248°F)
Cavity	C-I2-4
Fluids	All general purpose hydraulic fluids such as: MIL-H-5606, SAE 10, SAE 20, etc.
Filtration	Cleanliness code 18/**16/13**
Standard housing materials	Aluminum and Steel
Weight cartridge only	0,32 kg (0.71 lbs)
Seal kit	02-160979 (Buna-N), 02160981(Viton)

Viton is a registered trademark of E.I. DuPont

Pressure drop

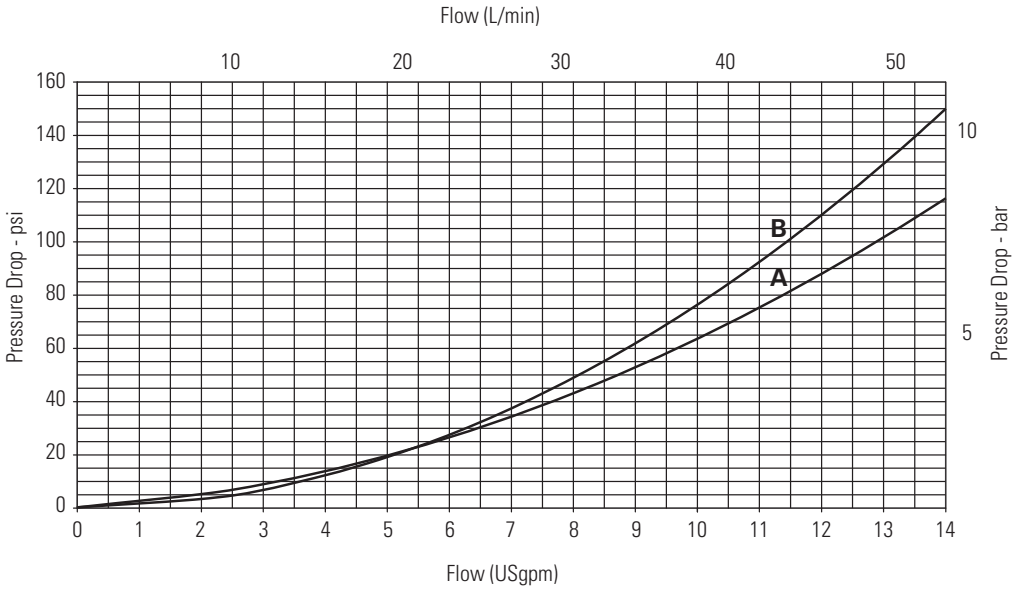

A - P3 to P4

B - P2 to P1

Where measurements are critical request certified drawings. We reserve the right to change specifications without notice.

MSV14-12 - Manual push valve

Push and twist, normally open, directional control valve
53,2 L/min (14 USgpm) • 350 bar (5000 psi)

Model code

MSV14 – 12 * – * – ** – 00**

1 2 3 4 5 6

1 Function
MSV14 - 4-Way 2 position manual push valve

2 Size
12 - 12 size

3 Seals
Blank - Buna-N
V - Viton®

4 Actuation Option
L - 2 position 'push and twist' actuation, with detent
E - Emergency stop actuation
N - No detent, momentary actuation
K - Push and twist

5 Port size
0 - Cartridge only

6 Special features
00 -Non (Only required if valve has special features, omitted if "00")

Code	Port size	Housing number	
0		**Aluminum**	**Steel**
A6G	3/4" BSPP	5986432-001	
A10H	3/4" BSP	5986434-001	
A12H	SAE 12	5986436-001	
S6G	3/4" BSPP		5991073-001
S10H	SAE 10		5981074-001
S12H	SAE 12		5981075-001

See section J for housing details.

D

Dimensions
mm (inch)

Torque cartridge in aluminum housing 81-95 Nm (60-70 ft. lbs)

Torque cartridge in steel housing 102-115 Nm (75-85 ft. lbs)

Cartridge only

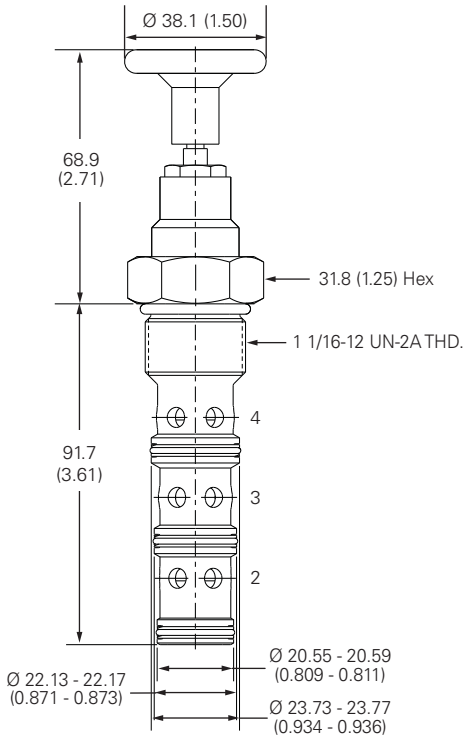

Installation drawing (steel)

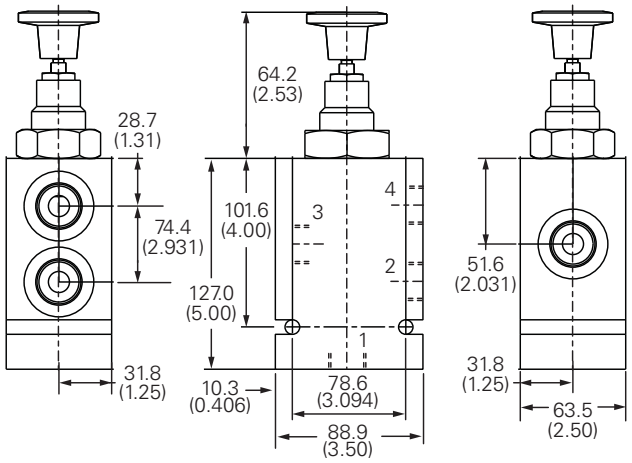

⚠ Warning

Aluminum housings can be used for pressures up to 210 bar (3000 psi). Steel housings must be used for operating pressures above 210 bar (3000 psi).

Where measurements are critical request certified drawings. We reserve the right to change specifications without notice.

MSV6-12 - Manual push valve

Push and twist, normally closed, directional control valve
53,2 L/min (14 USgpm) • 210 bar (3000 psi)

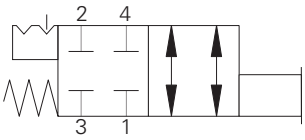

Operation

In the normal position, all ports are blocked. In the actuated position, flow is allowed from port 3 to port 2 and from port 4 to port 1.

Features

Hardened, ground and honed sleeve and spool for low internal leakage. Detent allows valve to be fixed in position

Sectional view

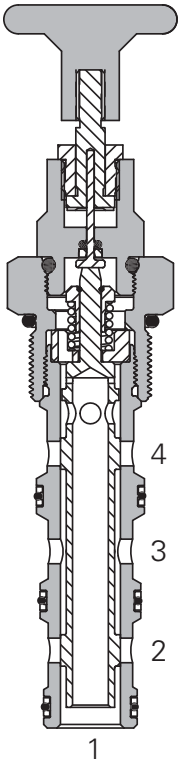

Description

This valve is a manually operated push and twist to switch, normally closed 2 position 4 ported directional valve. This is ideal for isolating an actuator.

Performance data

Ratings and specifications

Performance data is typical with fluid at 21,8 cST (105 SUS) and 49°C (120°F)	
Typical application pressure (all ports)	210 bar (3000 psi)
Cartridge fatigue pressure (infinite life)	210 bar (3000 psi)
Rated flow	53,2 L/min (14 USgpm)
Internal leakage	350 cc/min (21.5 in3/min)
Temperature range	-40° to 120°C (-40° to 248°F)
Cavity	C-12-4
Fluids	All general purpose hydraulic fluids such as: MIL-H-5606, SAE 10, SAE 20 etc.
Filtration	Cleanliness code 18/**16/13**
Standard housing materials	Aluminum
Weight cartridge only	0,32 kg (0.71 lbs)
Seal kit	02-160979 (Buna-N), 02-160980 (Viton®)

Viton is a registered trademark of E.I. DuPont

Pressure drop

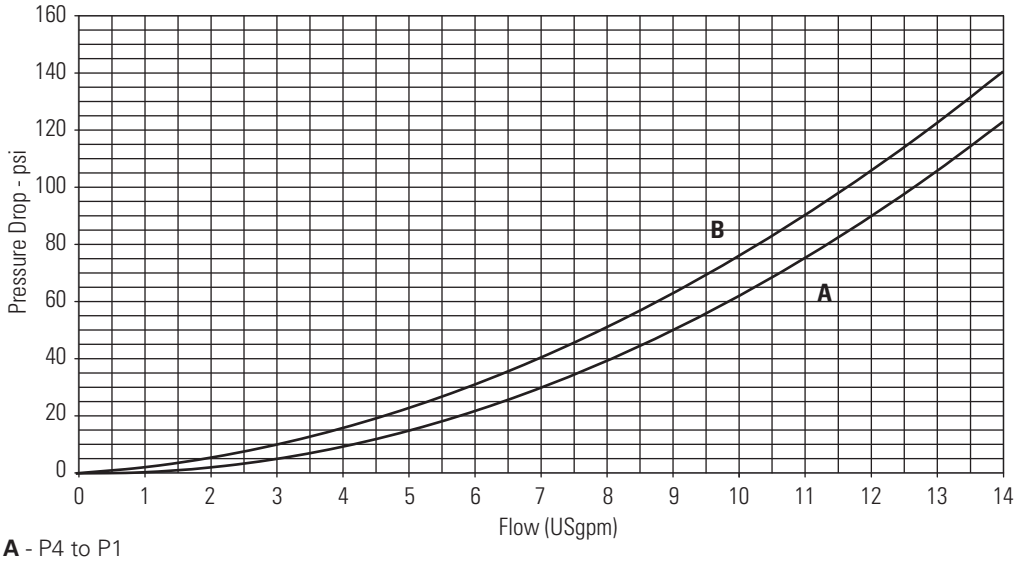

A - P4 to P1
B - P3 to P2

Where measurements are critical request certified drawings. We reserve the right to change specifications without notice.

MSV6-12 - Manual push valve

Push and twist, normally closed, directional control valve
53,2 L/min (14 USgpm) • 210 bar (3000 psi)

Model code

MSV6 – 12 * – L – ** – **

1 2 3 4 5 6

1 Function

MSV6 - 4 way, 2 position
Manual push valve

2 Size

12 - 12 size

3 Seal material

Blank - Buna-N
V - Viton®

4 Actuation option

L - 2 position 'push and twist' actuation
E - Emergency stop actuation
N - No Detent

5 Port size

0 - Cartridge only

Code	Port size	Housing number
		Aluminium
A6G	3/4" BSPP	5986432-001
A10T	SAE 10	6030517-001
A12H	SAE 12	5986436-001

6 Special features

Blank - No special features

D

Dimensions

mm (inch)

Torque cartridge in
aluminum housing
81-95 Nm (60-70 ft lbs)

Cartridge only

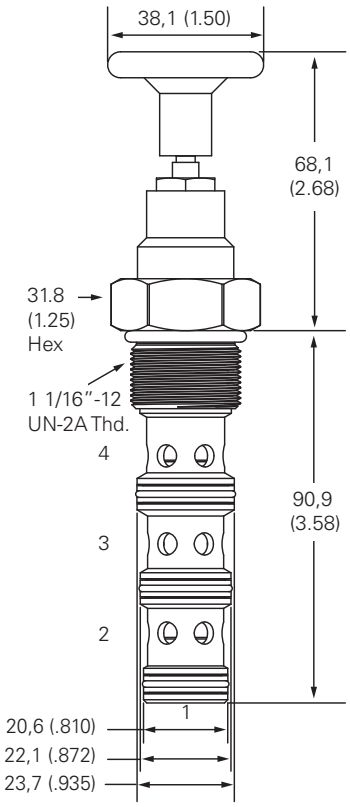

Installation drawing

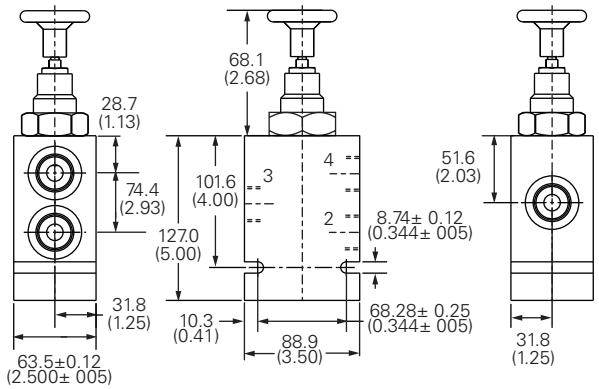

Where measurements are critical request certified drawings. We reserve the right to change specifications without notice.

MSV16-12 - Manual push valve

Push and twist, normally closed, directional control valve
53.2 L/min (14 USgpm) • 350 bar (5000 psi)

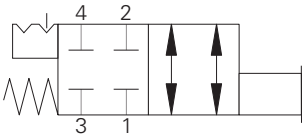

Operation

In the normal position, all ports are blocked. In the actuated position, flow is allowed from port 3 to port 4 and from port 1 to port 2.

Features

Hardened, ground and honed sleeve and spool for low internal leakage. Detent allows valve to be fixed in position. Working Pressure 350 bar.

Sectional view

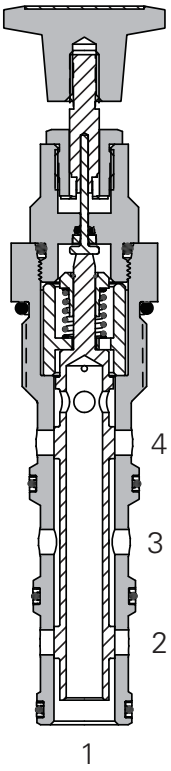

Description

This valve is a manually operated high pressure push and twist to switch, normally closed 2 position 4 ported directional valve. This is ideal for isolating an actuator.

Performance data

Ratings and specifications

Performance data is typical with fluid at 21,8 cST (105 SUS) and 49°C (120°F)	
Typical application pressure (all ports)	350 bar (5000 psi)
Cartridge fatigue pressure (infinite life)	350 bar (5000 psi)
Rated flow	53.2 L/min (14 USgpm)
Internal leakage	350 cc/min (21.5 in^3/min) @ 210 bar (3000 psi)
Temperature range	-40°to 120°C(-40° to 248°F)
Cavity	C-I2-4
Fluids	All general purpose hydraulic fluids such as: MIL-H-5606, SAE 10, SAE 20, etc.
Filtration	Cleanliness code 18/**16/13**
Standard housing materials	Aluminum and Steel
Weight cartridge only	0,32 kg (0.71 lbs)
Seal kit	02-160979 (Buna-N), 02-160980 (Viton®)

Viton is a registered trademark of E.I. DuPont

Pressure drop

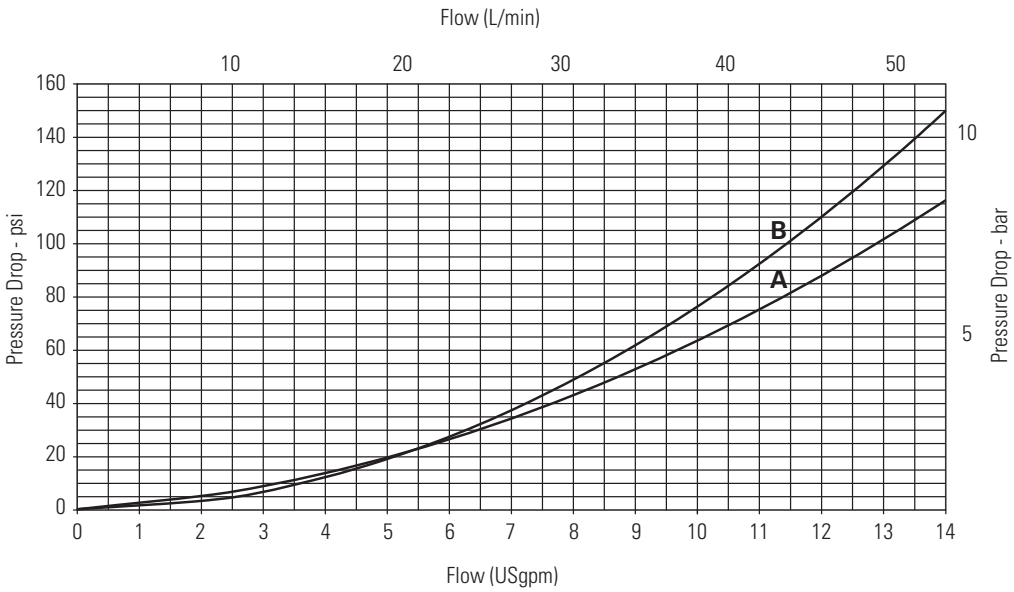

A - P4 to P1

B - P3 to P2

Where measurements are critical request certified drawings. We reserve the right to change specifications without notice.

MSV16-12 - Manual push valve

Push and twist, normally closed, directional control valve
53.2 L/min (14 USgpm) • 350 bar (5000 psi)

Model code

MSV16 – 12 * – * – ** – ***

1 2 3 4 5 6

1 Function

MSV16 - 4-way, 2 position manual push valve

2 Size

12 - 12 size

3 Seals

Blank - Buna-N
V - Viton®

4 Actuation option

L - 2 position 'push and twist' actuation, with detent
E - Emergency stop actuation
N -No detent, momentary actuation
K -Push and twist

5 Port size

0 - Cartridge only

Code	Port size	Housing number	
		Aluminum	Steel
A6G	3/4" BSPP	5986432-001	
A10H	SAE 10	5986434-001	
S12H	SAE 12	5986436-001	
S6G	3/4" BSPP		5991073-001
S10T	SAE 10		5991074-001
S12T	SAE 12		5991075-001

See section J for housing details.

6 Special features

Blank - No special features

Torque cartridge in housing
A - 81-95 Nm (60-70 ft. lbs)
S - 102-115 Nm (75-85 ft. lbs)

Dimensions

mm (inch)

Cartridge only

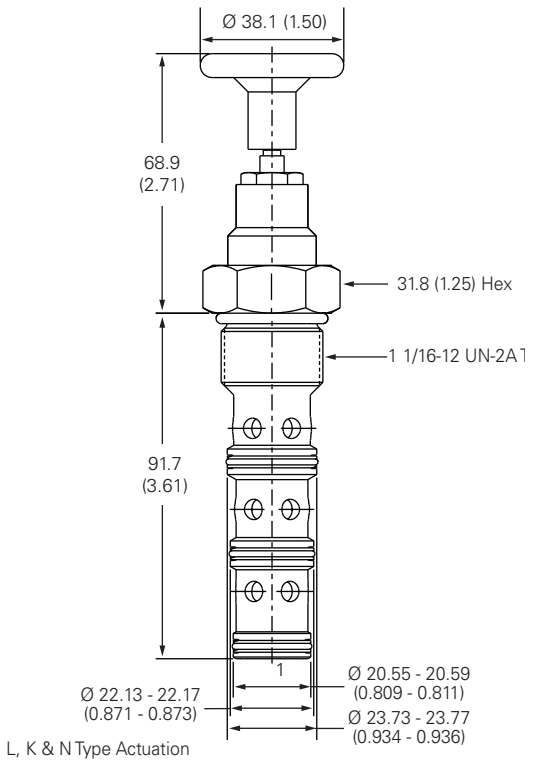

L, K & N Type Actuation

Installation drawing (steel)

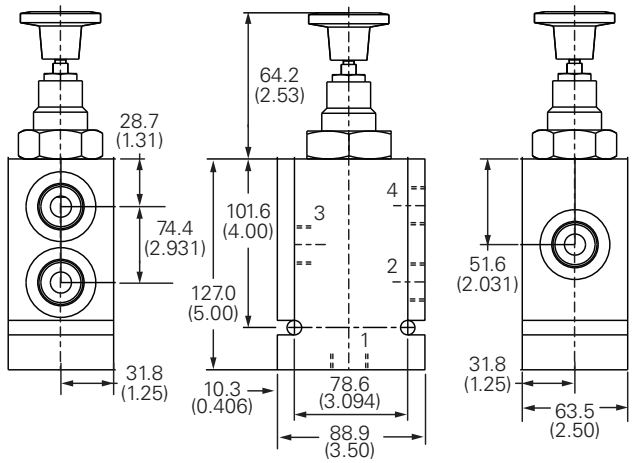

⚠ Warning

Aluminum housings can be used for pressures up to 210 bar (3000 psi). Steel housings must be used for operating pressures above 210 bar (3000 psi).

Where measurements are critical request certified drawings. We reserve the right to change specifications without notice.

D

MSV17-10 - Manual push valve

Push and twist directional control valve
20 L/min (5.3 USgpm) • 350 bar (5000 psi)

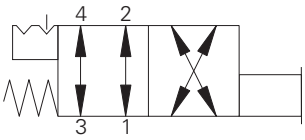

Operation

In the normal position, flow is allowed from port 3 to port 4 and from port 2 to port 1. In the actuated position, flow is allowed from port 3 to port 2 and from port 4 to port 1.

Features

Hardened, ground and honed sleeve and spool for low internal leakage. Detent allows valve to be fixed in position. Working Pressure 350 bar.

Sectional view

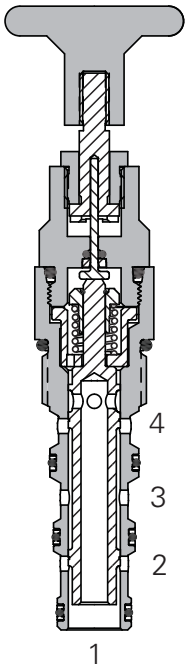

"L" Detent style

Description

This valve is a manually operated high pressure push and twist to switch, 2 position 4 ported directional valve. This is ideal for reversing the direction of an actuator.

Performance data

Ratings and specifications

Performance data is typical with fluid at 21,8 cST (105 SUS) and 49°C (120°F)	
Typical application pressure (all ports)	350 bar (5000 psi)
Cartridge fatigue pressure (infinite life)	350 bar (5000 psi)
Rated flow	20 L/min (5.3 USgpm)
Internal leakage	350 cc/min (21.5 in^3/min) @ 210 bar (3000 psi)
Temperature range	-40°to 120°C(-40° to 248°F)
Cavity	C-I0-4
Fluids	All general purpose hydraulic fluids such as: MIL-H-5606, SAE 10, SAE 20, etc.
Filtration	Cleanliness code 18/**16/13**
Standard housing materials	Aluminum and Steel
Weight cartridge only	0.28 kg (0.61 lbs)
Seal kit	(Buna-N), (Viton®)

Viton is a registered trademark of E.I. DuPont

Pressure drop

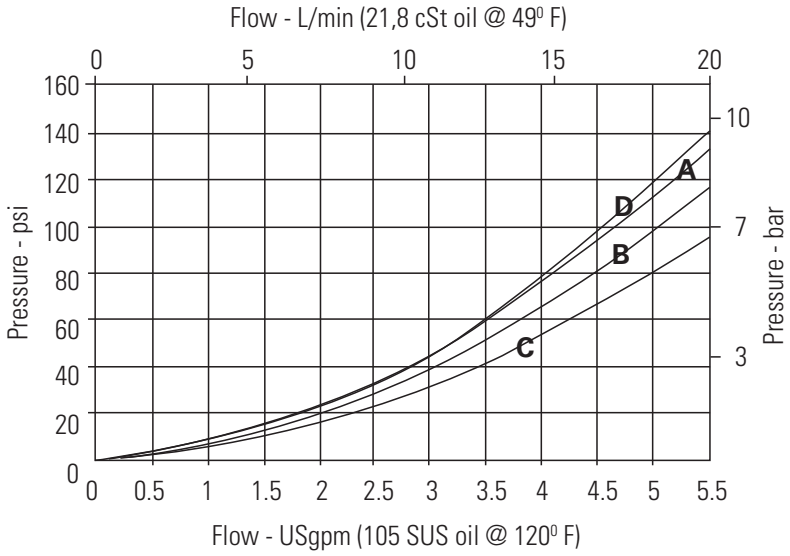

A - Port 3 to port 2 energized
B - Port 3 to port 4 de-energized
C - Port 2 to port 1 de-energized
D - Port 4 to port 1 energized

Where measurements are critical request certified drawings. We reserve the right to change specifications without notice.

MSV17-10 - Manual push valve

Push and twist directional control valve
20 L/min (5.3 USgpm) • 350 bar (5000 psi)

Model code

MSV17 – 10 * – * – * – ***

1 2 3 4 5 6

1 Function

MSV17 - 4-way, 2 position manual push valve

2 Size

10 - 10 size

3 Seals

Blank - Buna-N
V - Viton®

4 Actuation option

L - 2 position 'push and twist' actuation, with detent
E - Emergency stop actuation
N - No detent, momentary actuation
K - Push and twist

5 Port size

0 - Cartridge only

6 Special features

Blank - No special features

Code	Port size	Housing number	
		Aluminum	Steel
A2G	1/4" BSPP	02-185804	
A3G	3/8" BSPP	02-185805	
A6H	SAE 6	02-185802	
A8H	SAE 8	02-185803	
S2G	1/4" BSPP		02-175139
S3G	3/8" BSPP		02-175140
S6T	SAE 6		02-175137
S8T	SAE 8		02-175138

See section J for housing details.

Dimensions
mm (inch)

Torque cartridge in housing
A - 47-54 Nm (35-40 ft. lbs)
S - 68-75 Nm (50-55 ft. lbs)

Cartridge only

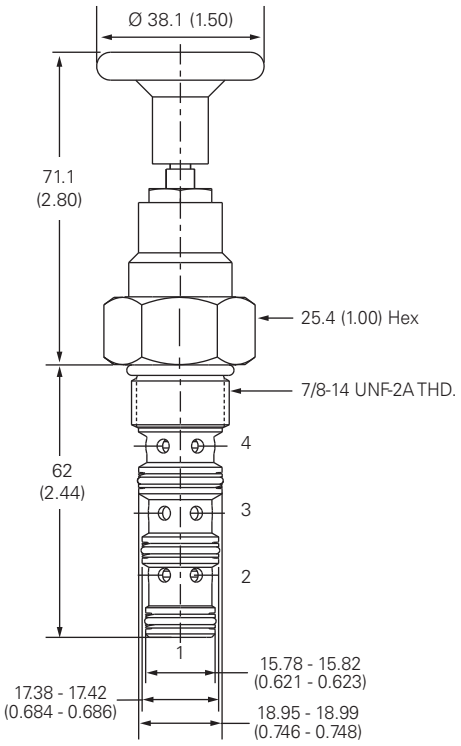

Installation drawing (steel)

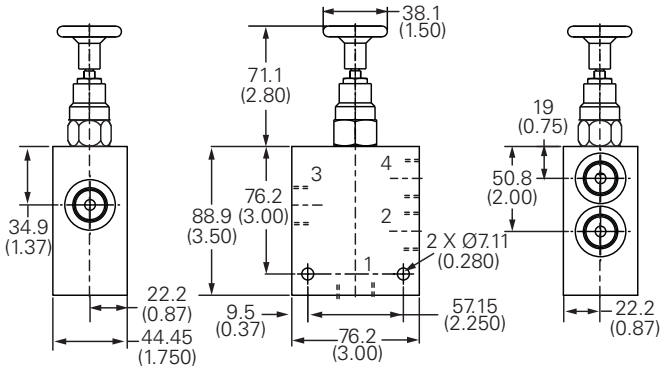

⚠ Warning

Aluminum housings can be used for pressures up to 210 bar (3000 psi). Steel housings must be used for operating pressures above 210 bar (3000 psi).

Where measurements are critical request certified drawings. We reserve the right to change specifications without notice.

MSV7-12 - Manual push valve

Push and twist directional control valve
45 L/min (11.9 USgpm) • 210 bar (3000 psi)

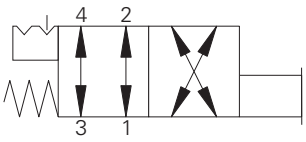

Operation

In the normal position, flow is allowed from port 3 to port 4 and from port 2 to port 1. In the actuated position, flow is allowed from port 3 to port 2 and from port 4 to port 1.

Features

Hardened, ground and honed sleeve and spool for low internal leakage. Detent allows valve to be fixed in position

Sectional view

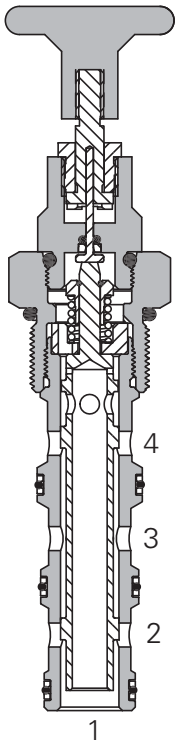

Description

This valve is a manually operated push and twist to switch, 2 position 4 ported directional valve. This is ideal for reversing the direction of an actuator.

Performance data

Ratings and specifications

Performance data is typical with fluid at 21,8 cST (105 SUS) and 49°C (120°F)	
Typical application pressure (all ports)	210 bar (3000 psi)
Cartridge fatigue pressure (infinite life)	210 bar (3000 psi)
Rated flow	45 L/min (11.9 USgpm)
Internal leakage	350 cc/min (21.5 in^3/min) @ 210 bar (3000 psi)
Temperature range	-40° to 120°C (-40° to 248°F)
Cavity	C-12-4
Fluids	All general purpose hydraulic fluids such as: MIL-H-5606, SAE 10, SAE 20 etc.
Filtration	Cleanliness code 18/**16/13**
Standard housing materials	Aluminum
Weight cartridge only	0,32 kg (0.71 lbs)
Seal kit	02-160979 (Buna-N), 02-160980 (Viton®)

Viton is a registered trademark of E.I. DuPont

Pressure drop

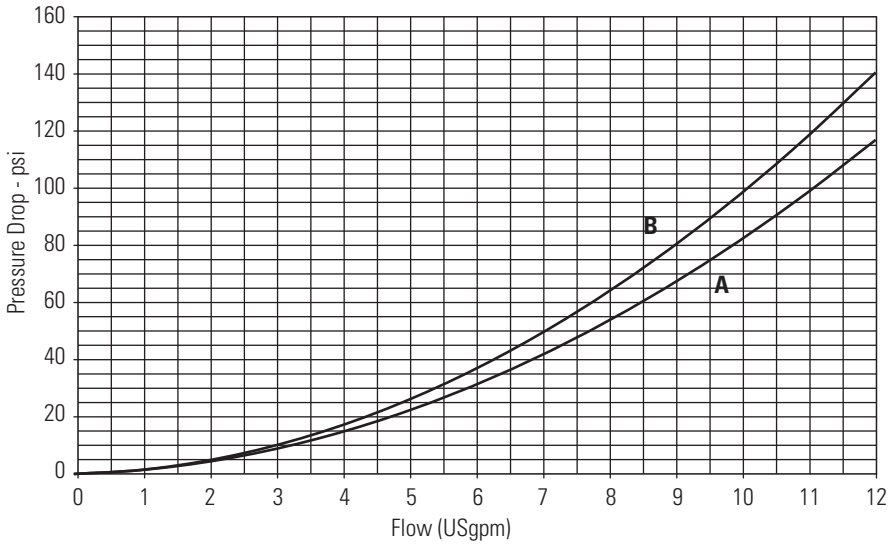

A - P4 to P1, P3 to P2
B - P2 to P1, P3 to P4

Where measurements are critical request certified drawings. We reserve the right to change specifications without notice.

MSV7-12 - Manual push valve

Push and twist directional control valve
45 L/min (11.9 USgpm) • 210 bar (3000 psi)

Model code

MSV7 – 12 * – L – ** – **

1 2 3 4 5 6

1 Function

MSV7 - 4 way, 2 position manual push valve

2 Size

12 - 12 size

3 Seal material

Blank - Buna-N
V - Viton®

4 Actuation option

L - 2 position 'push and twist' actuation
E - Emergency stop actuation
N - No Detent

5 Port size

0 - Cartridge only

Code	Port size	Housing number
		Aluminium
A6G	3/4" BSPP	5986432-001
A10T	SAE 10	6030517-001
A12H	SAE 12	5986436-001

6 Special features

Blank - No special features

D

Dimensions

mm (inch)

Cartridge only

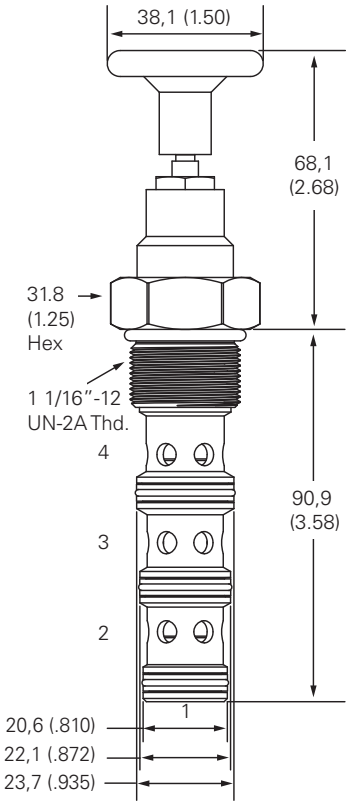

Torque cartridge in aluminum housing
81-95 Nm (60-70 ft. lbs)

Installation drawing

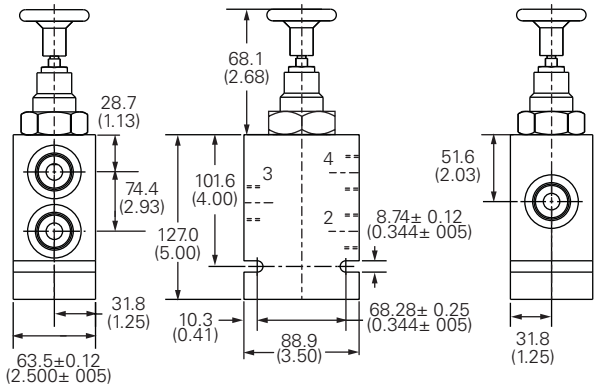

Where measurements are critical request certified drawings. We reserve the right to change specifications without notice.

MSV17-12 - Manual push valve

Push and twist directional control valve
20 L/min (5.3 USgpm) • 350 bar (5000 psi)

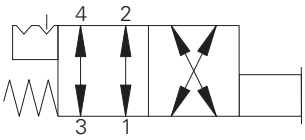

Operation

In the normal position, flow is allowed from port 3 to port 4 and from port 2 to port 1. In the actuated position, flow is allowed from port 3 to port 2 and from port 4 to port 1.

Features

Hardened, ground and honed sleeve and spool for low internal leakage. Detent allows valve to be fixed in position. Working Pressure 350 bar.

Sectional view

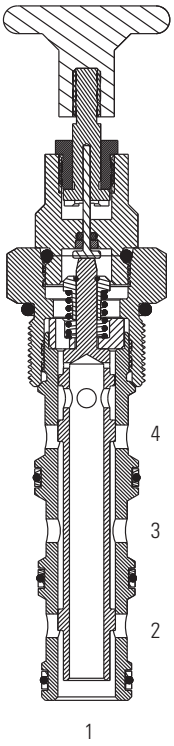

Description

This valve is a manually operated high pressure push and twist to switch, 2 position 4 ported directional valve. This is ideal for reversing the direction of an actuator.

Performance data

Ratings and specifications

Performance data is typical with fluid at 21,8 cST (105 SUS) and 49°C (120°F)	
Typical application pressure (all ports)	350 bar (5000 psi)
Cartridge fatigue pressure (infinite life)	350 bar (5000 psi)
Rated flow	20 L/min (5 USgpm)
Internal leakage	350 cc/min (21.5 in^3/min) @ 210 bar (3000 psi)
Temperature range	-40°to 120°C(-40° to 248°F)
Cavity	C-I2-4
Fluids	All general purpose hydraulic fluids such as: MIL-H-5606, SAE 10, SAE 20, etc.
Filtration	Cleanliness code 18/**16/13**
Standard housing materials	Aluminum and Steel
Weight cartridge only	0,32 kg (0.71 lbs)
Seal kit	02-160979 (Buna-N), 02-160980 (Viton®)

Viton is a registered trademark of E.I. DuPont

Pressure drop

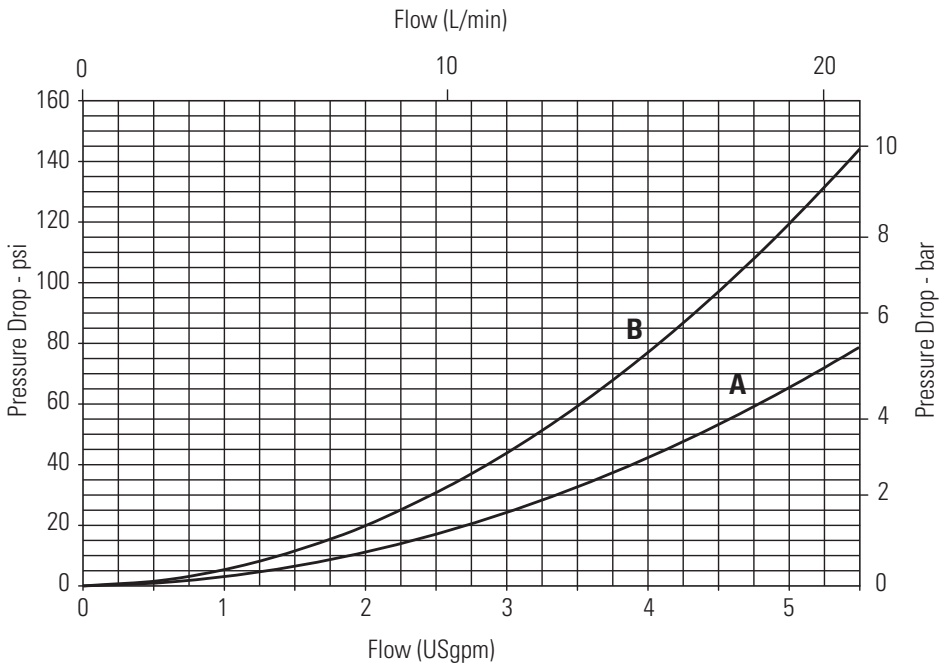

A - P4 to P1 and P3 to P2

B - P2 to P1 and P3 to P4

Where measurements are critical request certified drawings. We reserve the right to change specifications without notice.

MSV17-12 - Manual push valve

Push and twist directional control valve
20 L/min (5.3 USgpm) • 350 bar (5000 psi)

Model code

MSV17 – 12 * – * – * – ***

1 2 3 4 5 6

1 Function

MSV17 - 4-way, 2 position manual push valve

2 Size

12 - 12 size

3 Seals

Blank - Buna-N
V - Viton®

4 Actuation option

L - 2 position 'push and twist' actuation, with detent
E - Emergency stop actuation
N - No detent, momentary actuation
K - Push and twist

5 Port size

0 - Cartridge only

6 Special features

Blank - No special features

Code	Port size	Housing number	
		Aluminium	Steel
A6G	3/4" BSPP	5986432-001	
A10H	SAE 10	5986434-001	
A12H	SAE 12	5986436-001	
S6G	3/4" BSPP		5991073-001
S3G	3/8" BSPP		5991074-001
S6T	SAE 6		5991075-001

See section J for housing details.

D

Dimensions

mm (inch)

Cartridge only

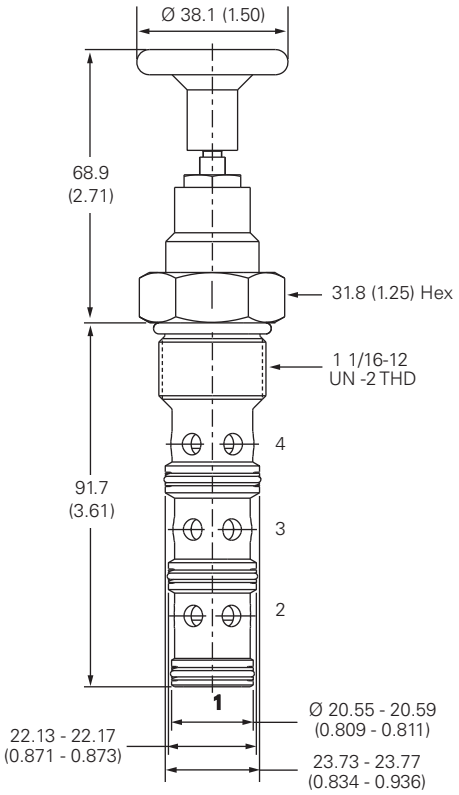

L, K & N Type Actuation

Torque cartridge in alumnium housing 81-95 Nm (60-70 ft. lbs)

Torque cartridge in steel housing 102-115 Nm (75-85 ft. lbs)

Installation drawing (steel)

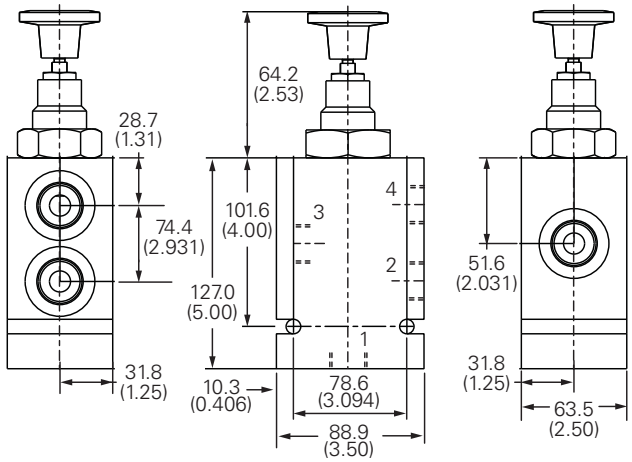

⚠ Warning

Aluminum housings can be used for pressures up to 210 bar (3000 psi). Steel housings must be used for operating pressures above 210 bar (3000 psi).

Where measurements are critical request certified drawings. We reserve the right to change specifications without notice.

PTS7-10 - Pilot to shift valve

2/2, pilot operated directional control valve
30 L/min (8 USgpm) • 210 bar (3000 psi)

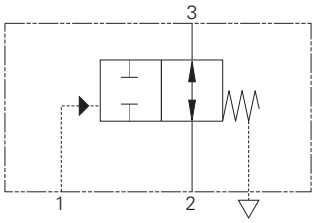

Operation

This valve allows flow between ports 2 and 3 until sufficient pressure at port 1 overcomes the spring bias, which closes both ports.

The spring chamber for this valve is externally vented to atmosphere.

Features

Hardened, ground and honed sleeve and spool for low internal leakage.

Sectional view

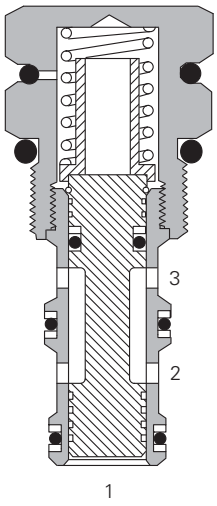

Performance data

Ratings and specifications

Performance data is typical with fluid at 21,8 cST (105 SUS) and 49°C (120°F)	
Typical application pressure (all ports)	210 bar (3000 psi)
Cartridge fatigue pressure (infinite life)	210 bar (3000 psi)
Rated flow	30 L/min (8 USgpm)
Internal leakage	164 cc/min (10 in^3/min) maximum @ 210 bar (3000 psi)
Temperature range	-40° to 120°C (-40° to 248°F)
Pilot pressures	**40** - 2,75 bar (40 psi) **80** - 5,5 bar (80 psi) **160** - 11,0 bar (160 psi)
Pilot displacement volume	0,49 cm^3 (0.02 in^3)
Cavity	C-10-3
Fluids	All general purpose hydraulic fluids such as: MIL-H-5606, SAE 10, SAE 20, etc.
Filtration	Cleanliness code 18/**16/13**
Standard housing materials	Aluminum
Weight cartridge only	0,10 kg (0.23 lbs)
Seal kit	889624 (Buna-N), 889628 (Viton®)

Viton is a registered trademark of E.I. DuPont

Description

This is a 2-way 2 position, pilot operated directional control valve ideal for isolating a function when the pilot pressure is applied or removed.

Pressure drop curves

Cartridge only

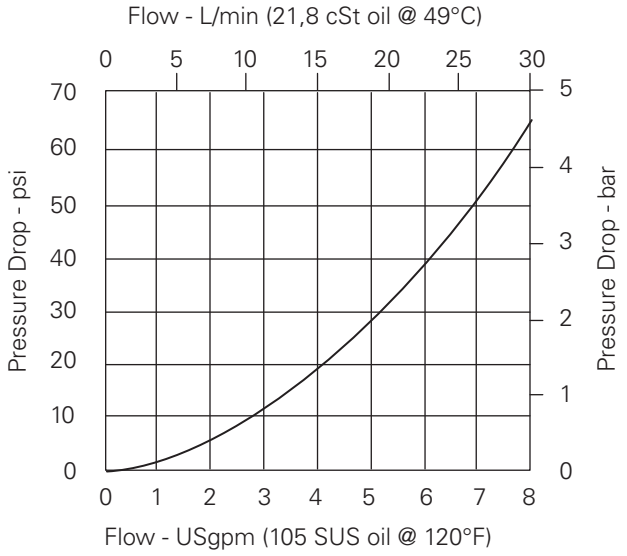

Where measurements are critical request certified drawings. We reserve the right to change specifications without notice.

PTS7-10 - Pilot to shift valve

2/2, pilot operated directional control valve
30 L/min (8 USgpm) • 210 bar (3000 psi)

Model code

PTS7 – 10 (V) – * – *** – 00**

1 2 3 4 5 6

1 Function

PTS7 - Pilot to shift valve

2 Size

10 - 10 size

3 Seal material

Blank - Buna-N
V - Viton

4 Port size

Code	Port size	Housing number		
		Aluminium light duty	Aluminium fatigue rated	Steel
0	Cartridge			
A3B	3/8" BSPP	02-173358	–	–
A6T	SAE 6	566162	–	–
A2G	1/4" BSPP	–	876705	–
A3G	3/8" BSPP	–	876714	–
A6H	SAE 6	–	876704	–
A8H	SAE 8	–	876711	–

See section J for housing details.

5 Pilot to shift (nominal)

Note: Code based on pressure in psi.
40 - 2,75 bar (40 psi)
80 - 5,5 bar (80 psi)
160 - 11,0 bar (160 psi)

6 Special features

00 - None
(Only required if valve has special features, omitted if "00".)

D

Dimensions

mm (inch)

Torque cartridge in aluminum housing 47-54 Nm (35-40 ft. lbs)

Cartridge only

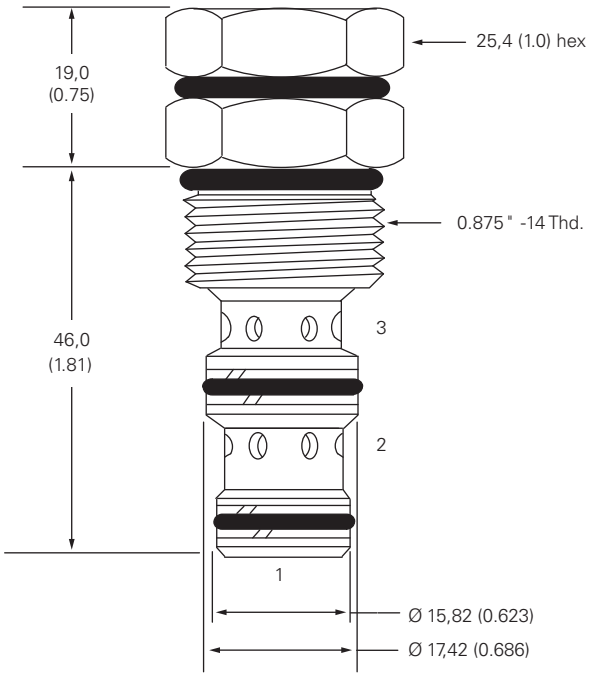

Installation drawing (aluminum)

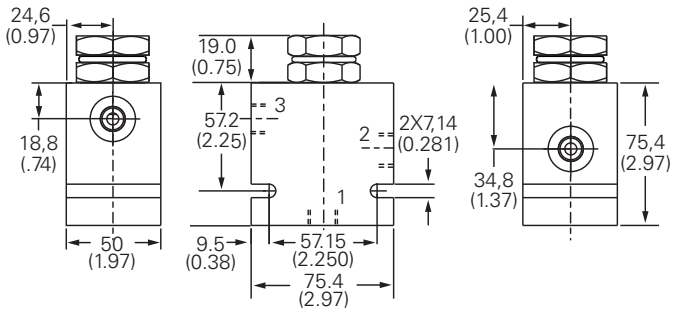

⚠ Warning

Aluminum housings can be used for pressures up to 210 bar (3000 psi). Steel housings must be used for operating pressures above 210 bar (3000 psi).

Where measurements are critical request certified drawings. We reserve the right to change specifications without notice.

PTS17-10 - Pilot to shift valve

2/2, pilot operated directional control valve
30 L/min (8 USgpm) • 350 bar (5000 psi)

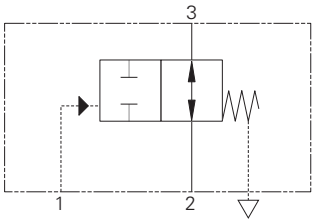

Operation

This valve allows flow between ports 2 and 3 until sufficient pressure at port 1 overcomes the spring bias, which closes both ports.

The spring chamber for this valve is externally vented to atmosphere.

Features

Hardened, ground and honed sleeve and spool for low internal leakage. Working pressure 350 bar.

Sectional view

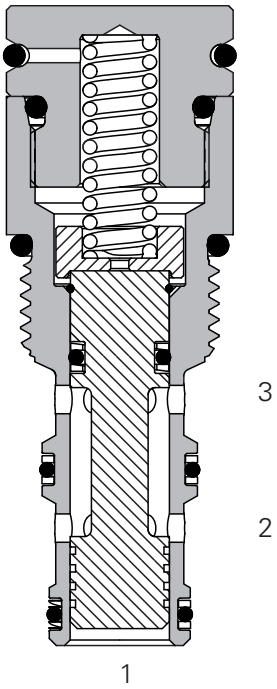

Performance data

Ratings and specifications

Performance data is typical with fluid at 21,8 cST (105 SUS) and 49°C (120°F)	
Typical application pressure (all ports)	350 bar (5000 psi)
Cartridge fatigue pressure (infinite life)	350 bar (5000 psi)
Rated flow	30 L/min (8 USgpm)
Internal leakage	210 cc/min (13in³/min) @ 350 bar (5000 psi)
Temperature range	-40°to 120°C(-40° to 248°F)
Pilot pressures	40 - 2,75 bar (40 psi) 80 - 5,5 bar (80 psi) 160 - 11,0 bar (160 psi)
Pilot displacement volume	0,49 cm³ (0.02 in³)
Cavity	C-10-3
Fluids	All general purpose hydraulic fluids such as: MIL-H-5606, SAE 10, SAE 20, etc.
Filtration	Cleanliness code 18/**16/13**
Standard housing materials	Aluminum and Steel
Weight cartridge only	0,10 kg (0.23 lbs)
Seal kit	889624 (Buna-N), 889628 (Viton®)

Viton is a registered trademark of E.I. DuPont

Pressure drop curves

Cartridge only

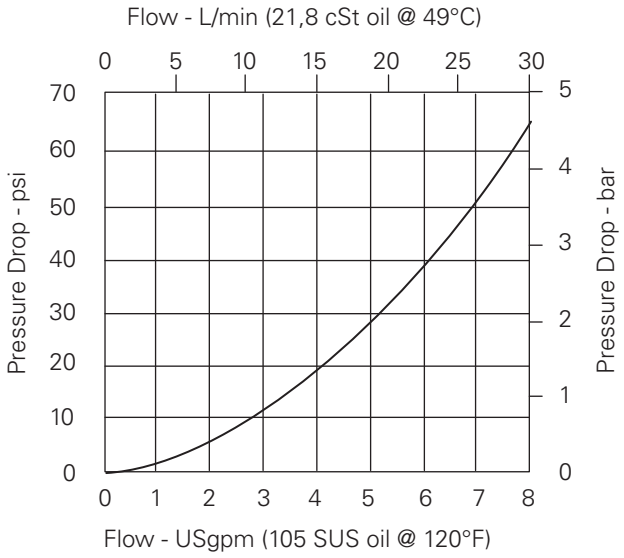

Description

This is a 2-way 2 position, high pressure, pilot operated directional control valve ideal for isolating a function when the pilot pressure is applied or removed.

Where measurements are critical request certified drawings. We reserve the right to change specifications without notice.

PTS17-10 - Pilot to shift valve

2/2, pilot operated directional control valve
30 L/min (8 USgpm) • 350 bar (5000 psi)

Model code

PTS17 – 10 (V) – * – ** – 00**

1 2 3 4 5 6

1 Function

PTS17 - Pilot to shift valve

2 Size

10 - 10 Size

3 Seals

Blank - Buna-N
V - Viton®

4 Port size

0 - Cartridge only

Code	Port size	Housing number		
		Aluminium light duty	Aluminium fatigue rated	Steel
A3B	3/8" BSPP	02-173358		
A6T	SAE 6	566162		
A2G	1/4" BSPP		876705	
A3G	3/8" BSPP		876714	
A6H	SAE 6		876704	
A8H	SAE 8		876711	
S2G	1/4" BSPP			02-175127
S3G	3/8" BSPP			02-175128
S6T	SAE 6			02-175124
S8T	SAE 8			02-175125

See section J for housing details.

5 Pilot to shift (nominal)

Note: Code based on pressure in psi.

40 - 2,75 bar (40 psi)

80 - 5,5 bar (80 psi)

160 - 11,0 bar (160 psi)

6 Special features

00 - None
(Only required if valve has special features, omitted if "00")

D

Dimensions

mm (inch)

Torque cartridge in aluminum housing 47-54 Nm (35-40 ft. lbs)

Torque cartridge in steel housing 68-75 Nm (50-55 ft. lbs)

Cartridge only

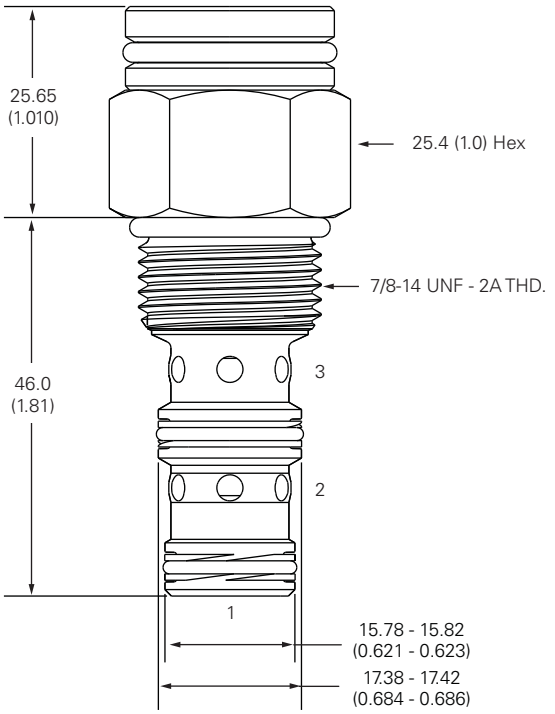

Installation drawing (steel)

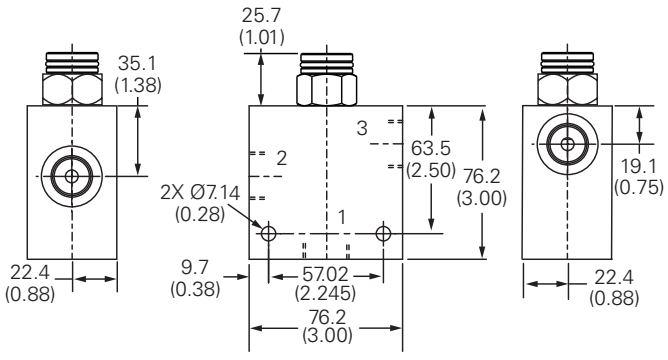

⚠ Warning

Aluminum housings can be used for pressures up to 210 bar (3000 psi). Steel housings must be used for operating pressures above 210 bar (3000 psi).

Where measurements are critical request certified drawings. We reserve the right to change specifications without notice.

PTS17-12 - Pilot to shift valve

2/2, pilot operated directional control valve
114 L/min (30 USgpm) • 350 bar (5000 psi)

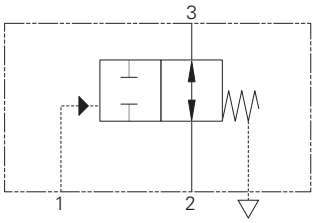

Operation

This valve allows flow between ports 2 and 3 until sufficient pressure at port 1 overcomes the spring bias, which closes both ports.

The spring chamber for this valve is externally vented to atmosphere.

Features

Hardened, ground and honed sleeve and spool for low internal leakage. Working pressure 350 bar.

Sectional view

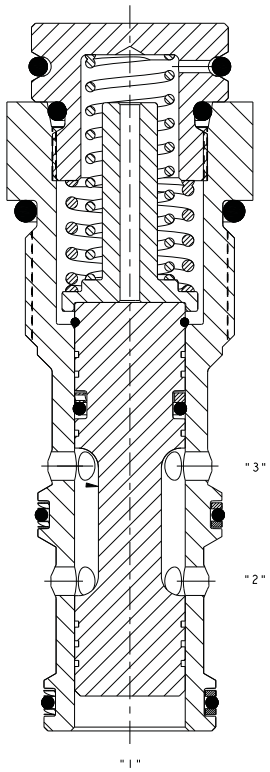

Performance data

Ratings and specifications

Performance data is typical with fluid at 21,8 cST (105 SUS) and 49°C (120°F)	
Typical application pressure (all ports)	350 bar (5000 psi)
Cartridge fatigue pressure (infinite life)	350 bar (5000 psi)
Rated flow	114 L/min (30 USgpm)
Internal leakage	210 cc/min (13in³/min) @ 350 bar (5000 psi)
Temperature range	-40°to 120°C(-40° to 248°F)
Pilot pressures	40 - 2,75 bar (40 psi) 80 - 5,5 bar (80 psi) 120 - 8,3 bar (120 psi) 160 - 11,0 bar (160 psi)
Pilot displacement volume	0,49 cm³ (0.02 in³)
Cavity	C-I2-3
Fluids	All general purpose hydraulic fluids such as: MIL-H-5606, SAE 10, SAE 20, etc.
Filtration	Cleanliness code 18/**16/13**
Standard housing materials	Aluminum and Steel
Weight cartridge only	0.25 kg (0.55 lbs)
Seal kit	9900171 (Buna-N), 9900172 (Viton®)

Viton is a registered trademark of E.I. DuPont

Pressure drop curves

Cartridge only

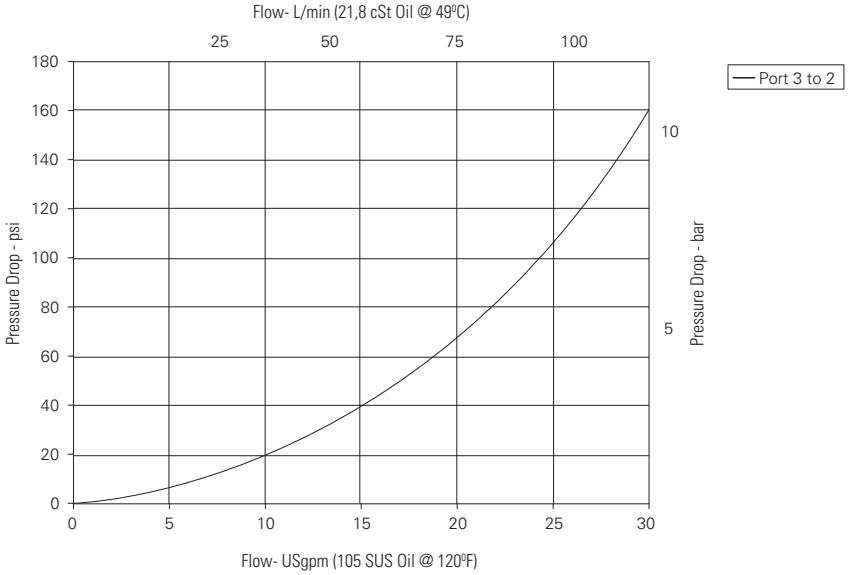

Description

This is a 2-way 2 position, high pressure, pilot operated directional control valve ideal for isolating a function when the pilot pressure is applied or removed.

Where measurements are critical request certified drawings. We reserve the right to change specifications without notice.

PTS17-12 - Pilot to shift valve

2/2, pilot operated directional control valve
114 L/min (30 USgpm) • 350 bar (5000 psi)

Model code

PTS17 – 12 (V) – * – ** – 00**

1 2 3 4 5 6

1 Function

PTS17 - Pilot to shift valve

2 Size

12 - 12 Size

3 Seals

Blank - Buna-N
V - Viton®

4 Port size

0 - Cartridge only

Code	Port size	Housing number	
		Aluminium	Steel
A4G	1/2" BSPP	02-161817	
A6G	3/4" BSPP	02-161816	
A10H	SAE 10	02-160642	
A12H	SAE 12	02-160646	
S4G	1/2" BSPP		02-169815
S6G	3/4" BSPP		02-169814
S10T	SAE 10		02-161070
S12T	SAE 12		02-169816

See section J for housing details.

5 Pilot to shift (nominal)

Note: Code based on pressure in psi.
80 - 5,5 bar (80 psi)
120 - 8,3 bar (120 psi)
160 - 11,0 bar (160 psi)

6 Special features

00 - None
(Only required if valve has special features, omitted if "00")

D

Dimensions

mm (inch)

Torque cartridge in aluminum housing 81-95 Nm (60-70 ft. lbs)

Torque cartridge in steel housing 102-115 Nm (75-85 ft. lbs)

Cartridge only

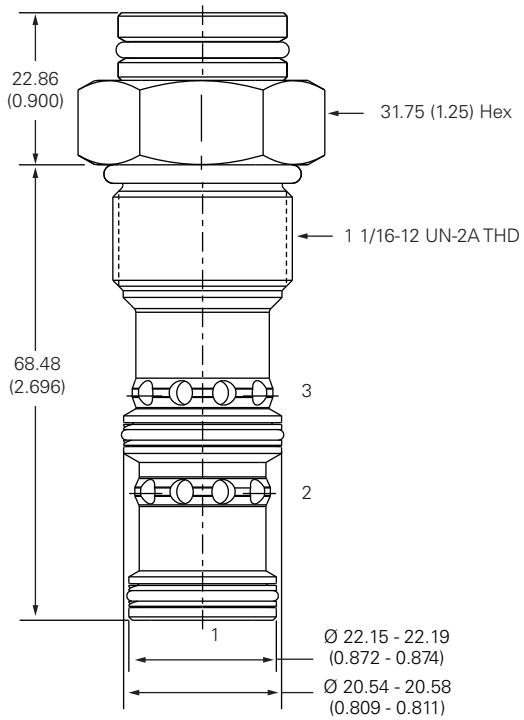

Installation drawing (steel)

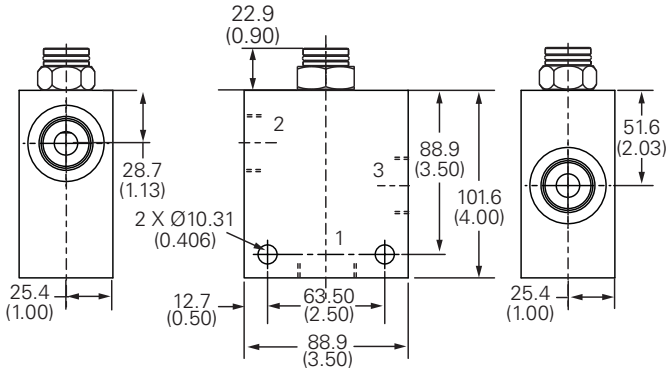

⚠ Warning

Aluminum housings can be used for pressures up to 210 bar (3000 psi). Steel housings must be used for operating pressures above 210 bar (3000 psi).

Where measurements are critical request certified drawings. We reserve the right to change specifications without notice.

1SB10 - Brake sequence valve

Brake sequence directional valve
10 L/min (2.5 USgpm) • 350 bar (5000 psi)

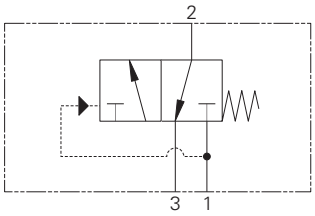

Operation

When the pressure in the inlet line is below the switching pressure (15 bar), the outlet will be connected to the tank, the spool being held in place by the spring force.

When the pressure in the inlet line exceeds the switching pressure, the spool will slide back, opening inlet to outlet.

Features

Cartridge design enabling speedy servicing when mounted in a body or in a composite manifold.

Sectional view

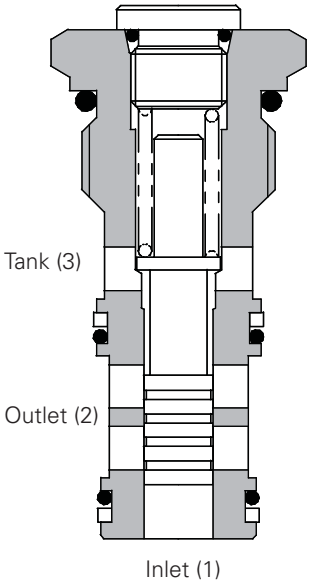

Performance data

Ratings and specifications

Performance data is typical with fluid at 21,8 cST (105 SUS) and 49°C (120°F)	
Max working pressure	350 bar (5000 psi)
Rated flow	10 L/min (2.5 US gpm)
Internal leakage	50 ml/min nominal
Temperature range	-30° to 90°C (22° to 194°F)
Cavity	A893 (see Section M)
Torque cartridge into cavity	60 Nm (44 lbs ft)
Mounting position	Unrestricted
Filtration	BS5540/4 Class 18/**13** (25 micron or better)
Nominal viscosity range	5 to 500 cSt
Cartridge material	All working parts hardened and ground steel. External surfaces zinc plated.
Standard housing materials	Aluminum and Steel
Weight	1SB10 .12 kg (.26 lbs), 1SB15 1.0 kg (2.2 lbs)
Seal kit	SK182 (Nitrile) SK182V (Viton®)

Viton is a registered trademark of E.I. DuPont

Description

This valve provides a bias so that a predetermined pressure (15 bar) has to be reached before the valve will switch. In a typical brake circuit the brake will be held on until system pressure reaches the bias pressure. Once this pressure has been reached the valve will switch and supply pressure to the brake to hold it off. If the pressure then falls below the bias pressure the valve will again switch, applying the brake in a controlled manner.

Pressure drop

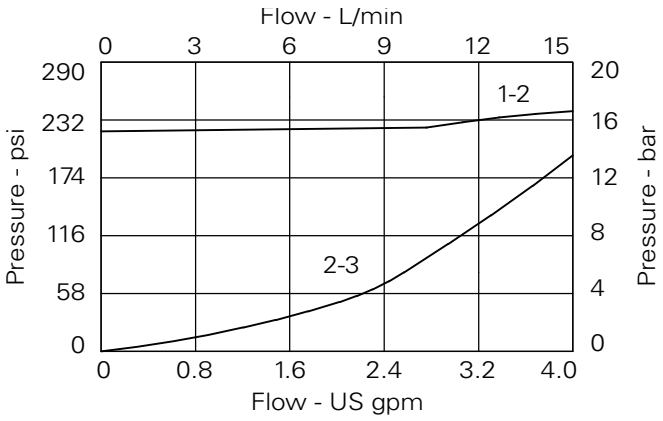

Where measurements are critical request certified drawings. We reserve the right to change specifications without notice.

1SB10 - Brake sequence valve

Brake sequence directional valve
10 L/min (2.5 USgpm) • 350 bar (5000 psi)

Model code

1SB ** – **3W** **S** – **377**

1 2 3 4

1 Function

1SB10 - Cartridge only

2 Port size

Code	Port size	Housing number	
		Aluminum single	Steel
0	Cartridge only		
2W	1/4" BSP		A1882
3W	3/8" BSP		A1883
6T	3/8" SAE	A10715	A7371

3 Seals

S - Nitrile
SV- Viton

4 Body material

377 - Steel

(Omit for aluminum (up to 210 bar).

D

Dimensions

mm (inch)

Cartridge only

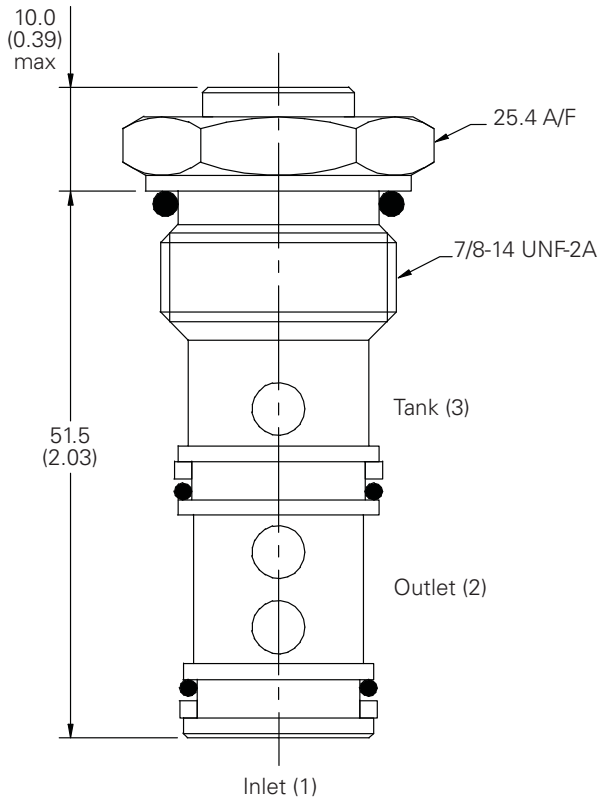

Installation drawing

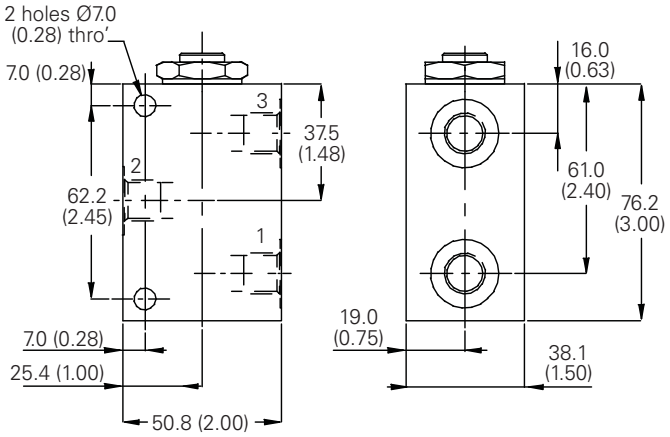

Where measurements are critical request certified drawings. We reserve the right to change specifications without notice.

1SB304 - Brake release shuttle valve

Brake release shuttle directional valve
30 L/min (8 USgpm) • 350 bar (5000 psi)

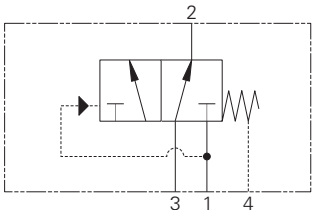

Operation

When pressure in the inlet exceeds the set pressure, flow is allowed from inlet to outlet closing off the tank line.

When the inlet pressure is removed, the spool returns to its normal position, opening the outlet port to tank and closing the inlet port.

Features

Cartridge design enabling speedy servicing when mounted in a body or in a composite manifold.

Sectional view

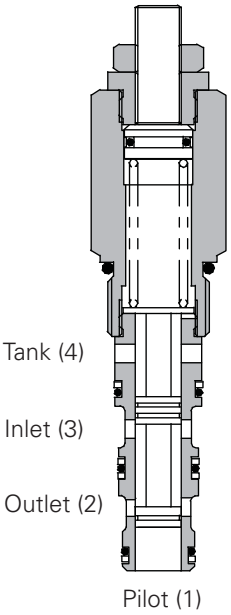

Performance data

Ratings and specifications

Performance data is typical with fluid at 32 cST (150 SUS)	
Max working pressure	350 bar (5000 psi)
Rated flow	30 L/min (8 US gpm)
Pilot pressure	10 to 100 bar (145 to 1450 psi) max pilot pressure 210 bar
Internal leakage	50 ml/min nominal
Temperature range	-30° to 90°C (-22° to 194°F)
Cavity	A5302 (see Section M)
Torque cartridge into cavity	60 Nm (44 lbs ft)
Mounting position	Unrestricted
Filtration	BS5540/4 Class 18/**13** (25 micron or better)
Nominal viscosity range	5 to 500 cSt
Cartridge material	All working parts hardened and ground steel. External surfaces zinc plated.
Standard housing materials	Aluminum and Steel
Weight	.24 kg (.53 lbs)
Seal kit	SK645 (Nitrile) SK645V (Viton®)

Viton is a registered trademark of E.I. DuPont

Description

This valve provides a means of supplying oil to the outlet from the inlet when a pre-set pressure is reached. On removal of this pressure, inlet closes opening outlet to tank. Ideal for use in braking systems where a pressure is required in the main system before the brake is removed.

Pressure drop

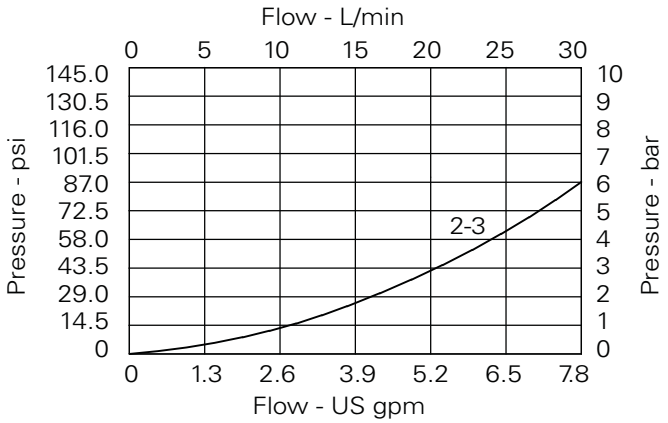

Where measurements are critical request certified drawings. We reserve the right to change specifications without notice.

1SB304 - Brake release shuttle valve

Brake release shuttle directional valve
30 L/min (8 USgpm) • 350 bar (5000 psi)

Model code

1SB* – P 3W – S – 12**

1 2 3 4 5

1 Function

1SB304 - Cartridge only

2 Adjustment means

P - Leakproof screw adjustment

3 Port size

Code	Port size	Housing number	
		Aluminum	Steel
0	Cartridge only		
3W	3/8" BSP	B13602	B13603
6T	3/8" SAE	B21661	B21660

4 Seals

S - Nitrile
SV - Viton

5 Pressure range

Note: Code based on pressure in bar.

6 - 10-60 bar.
Std setting 30 bar
12 - 20-100 bar.
Std setting 60 bar
Std setting made at 14 L/min (3.8 USgpm).

D

Dimensions

mm (inch)

Cartridge only

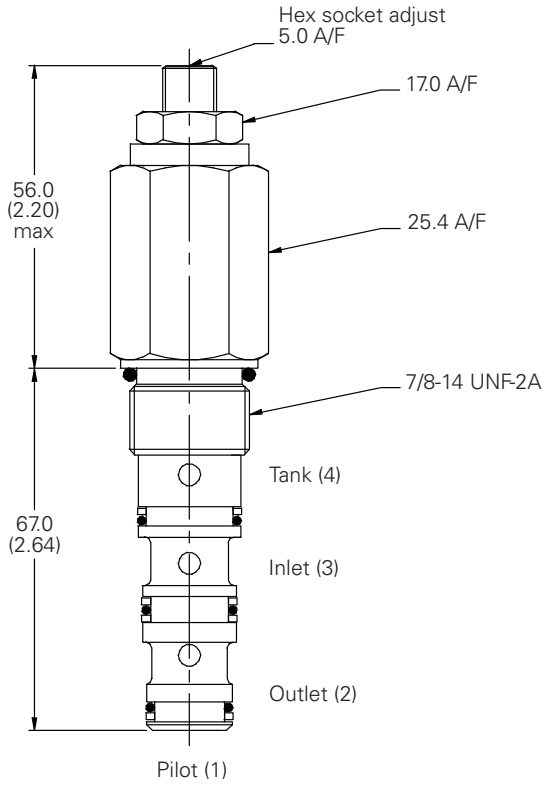

Installation drawing

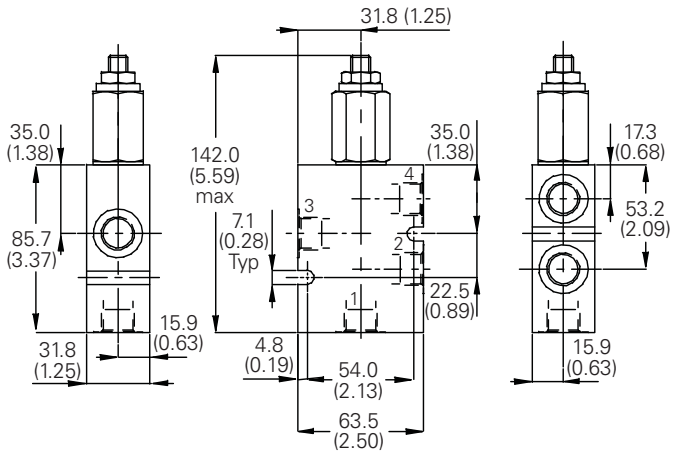

Where measurements are critical request certified drawings. We reserve the right to change specifications without notice.

1RDS702 - Pilot to shift valve

Pilot to shift directional valve
80 L/min (20 USgpm) • 420 bar (6090 psi)

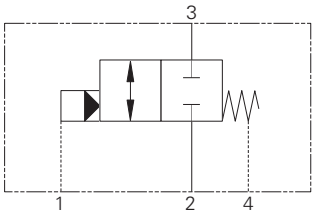

Operation

When a pre-set pilot pressure is reached the spool moves back against the spring either opening or closing the line between inlet and outlet.

When the pilot pressure falls the valve will return to its normal position.

Features

Cartridge design enabling speedy servicing when mounted in a body or in a composite manifold.

Sectional view

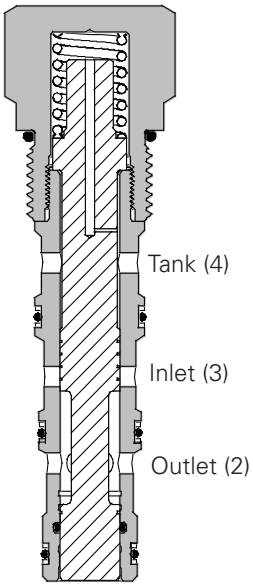

Performance data

Ratings and specifications

Performance data is typical with fluid at 32 cST (150 SUS)	
Max working pressure	420 bar (6090 psi)
Rated flow	80 L/min (20 USgpm)
Internal leakage	90 ml/min nominal per land
Temperature range	-30° to 90°C (-22° to 194°F)
Cavity	A21145 (see Section M)
Torque cartridge into cavity	67 Nm (50 lbs ft)
Mounting position	Unrestricted
Filtration	BS5540/4 Class 18/13 (25 micron or better)
Nominal viscosity range	5 to 500 cSt
Pilot pressure	7 or 10 bar (101.5 or 145 psi)
Cartridge material	All working parts hardened and ground steel. External surfaces zinc plated.
Standard housing materials	Aluminum and Steel
Weight	1RDS702 .37 kg (.8 lbs), 1RDS752 1.97 kg (4.3 lbs)
Seal kit	SK1227 (Nitrile) SK1227V (Viton®)

Viton is a registered trademark of E.I. DuPont

Description

This valve provides a means of interrupting a pressure line when a predetermined pilot pressure is reached in a normally open or normally closed form.

The valve can be used in any pilot or small flow system as a remotely operated sequence valve.

Pressure drop

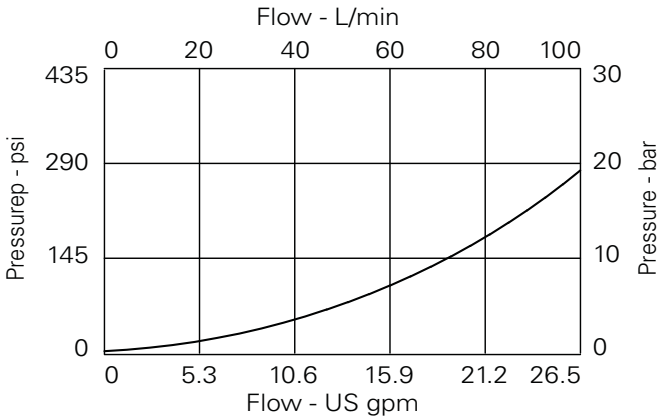

Where measurements are critical request certified drawings. We reserve the right to change specifications without notice.

1RDS702 - Pilot to shift valve

Pilot to shift directional valve
80 L/min (20 USgpm) • 420 bar (6090 psi)

Model code

1RDS* – 2 N – 6W – S – 1.0**

1 2 3 4 5 6

1 Function

1RDS702 - Cartridge only
1RDS752 - Cartridge and body

2 Options

2 - Normally closed

3 Adjustment means

N - Fixed

4 Port size

Code	Port size	Housing number	
		Aluminum	Steel
Omit	Cartridge only		
6W	3/4" BSP	B21818	B21819
12T	3/4" SAE	B21822	B21823

5 Seals

S - Nitrile
SV - Viton

6 Pilot pressure.

.7 - 7 bar
1.0 - 10 bar

D

Dimensions

mm (inch)

Note: For applications above 210 bar (3000 psi), please consult our technical department or use the steel body option.

Cartridge only

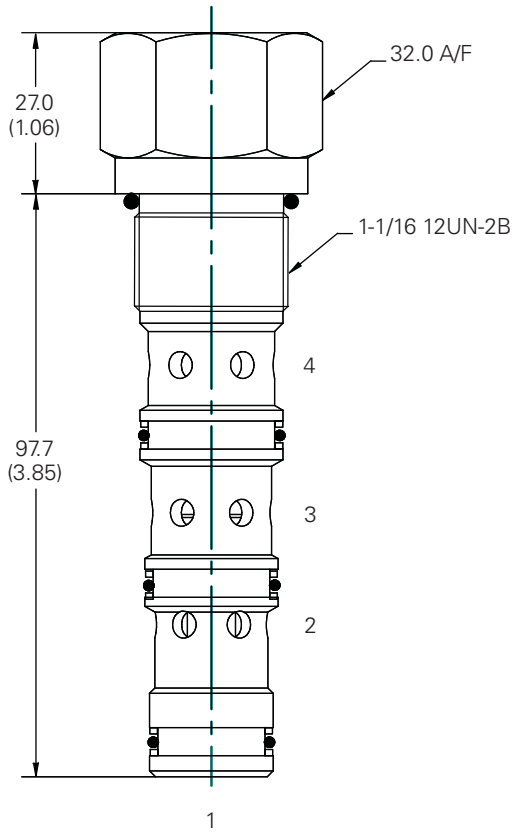

Installation drawing

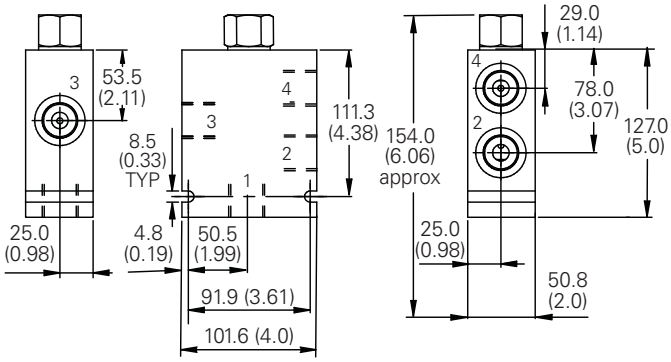

Where measurements are critical request certified drawings. We reserve the right to change specifications without notice.

PTS1-10 - Pilot to shift valve

Pilot operated, directional control valve
30 L/min (7.9 USgpm) • 210 bar (3000 psi)

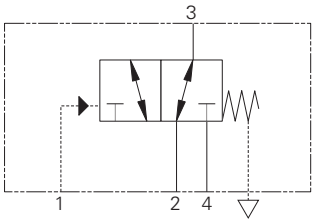

Operation

This valve allows flow between ports 2 and 3 while blocking port 4 until sufficient pressure has been applied to port 1 and the spring bias is overcome.

At this time, flow is directed between port 3 and port 4 while blocking port 2. During the cross-over transition, all ports are blocked. The spring chamber for this valve is externally vented to atmosphere.

Features

Hardened, ground and honed sleeve and spool for low internal leakage.

Sectional view

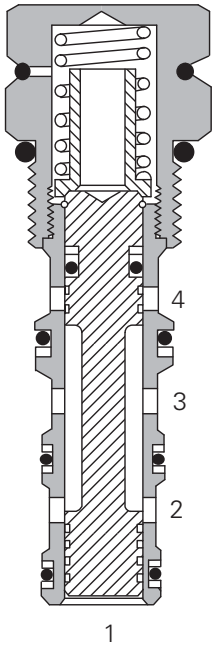

Performance data

Ratings and specifications

Performance data is typical with fluid at 21,8 cST (105 SUS) and 49°C (120°F)	
Typical application pressure (all ports)	210 bar (3000 psi)
Cartridge fatigue pressure (infinite life)	210 bar (3000 psi)
Rated flow	30 L/min (8 USgpm)
Internal leakage	164 cc/min (10 in³/min) maximum @ 210 bar (3000 psi)
Temperature range	-40° to 120°C (-40° to 248°F)
Pilot pressures	40 - 2,75 bar (40 psi) 80 - 5,5 bar (80 psi) 160 - 11,0 bar (160 psi)
Pilot displacement volume	0,49 cm3 (0.02 in³)
Cavity	C-10-4
Fluids	All general purpose hydraulic fluids such as: MIL-H-5606, SAE 10, SAE 20 etc.
Filtration	Cleanliness code 18/**16/13**
Standard housing materials	Aluminum
Weight Cartridge only	0,14 kg (0.32 lbs)
Seal kit	889625 (Buna-N), 566080 (Viton®)

Viton is a registered trademark of E.I. DuPont

Description

This is a 3-way 2 position, pilot operated directional control valve ideal for selecting a function when the pilot pressure is applied or removed.

Pressure drop curves

Cartridge only

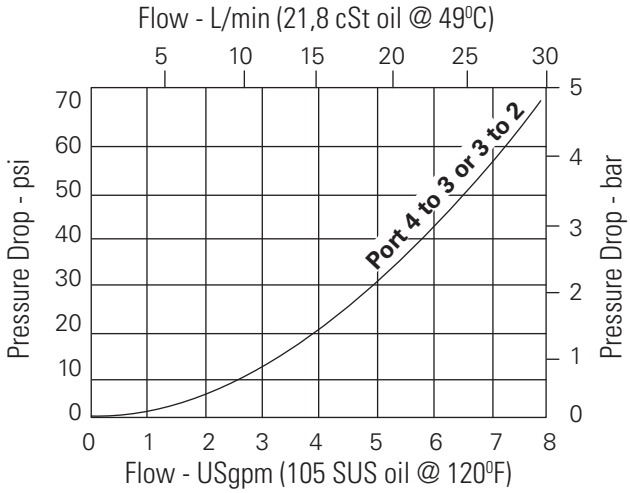

Where measurements are critical request certified drawings. We reserve the right to change specifications without notice.

PTS1-10 - Pilot to shift valve

Pilot operated, directional control valve
30 L/min (7.9 USgpm) • 210 bar (3000 psi)

Model code

PTS1 – 10 (V) – ** – ** – 00**

1 2 3 4 5 6

1 Function

PTS1 - Pilot to shift valve

2 Size

10 - 10 size

3 Seal material

Blank - Buna-N
V - Viton®

4 Port size

0 - Cartridge only

Code	Port size	Housing number	
		Aluminium light duty	Aluminium fatigue rated
3B	3/8" BSPP	02-179705	
6T	SAE 6	566161	
2G	1/4" BSPP	–	876709
3G	3/8" BSPP	–	876715
6H	SAE 6	–	876708
8H	SAE 8	–	876713

See section J for housing details.

5 Pilot to shift (nominal)

40 - 2,75 bar (40 psi)
80 - 5,5 bar (80 psi)
160 - 11,0 bar (160 psi)

6 Special features

00 - None
(Only required if valve has special features, omitted if "00.")

D

Dimensions

mm (inch)

Torque cartridge in aluminum housing
47-54 Nm (35-40 ft lbs)

Cartridge only

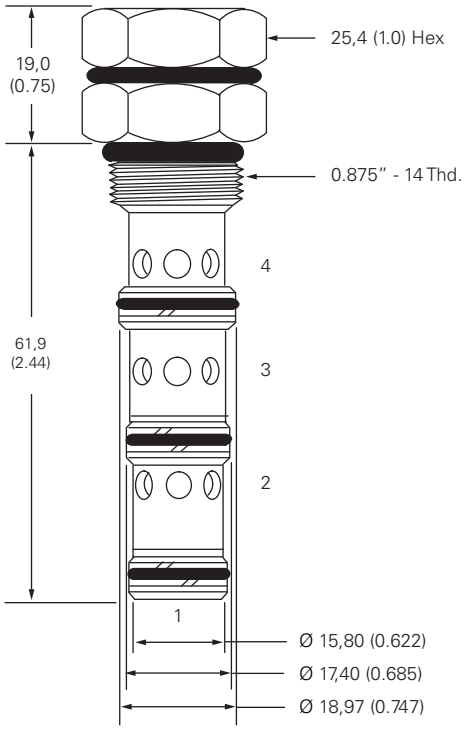

Installation drawing

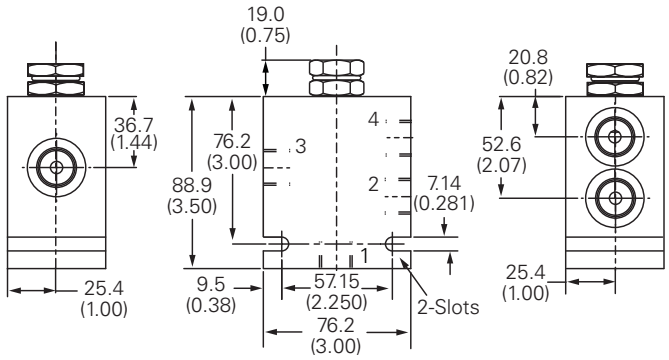

Where measurements are critical request certified drawings. We reserve the right to change specifications without notice.

PTS11-12 - Pilot to shift valve

Pilot operated, directional control valve
76 L/min (20 USgpm) • 350 bar (5000 psi)

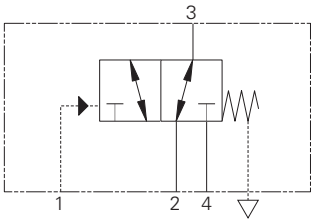

Operation

This valve allows flow between ports 2 and 3 while blocking port 4 until sufficient pressure has been applied to port 1 and the spring bias is overcome.

At this time, flow is directed between port 3 and port 4 while blocking port 2. During the cross-over transition, all ports are blocked. The spring chamber for this valve is externally vented to atmosphere.

Features

Hardened, ground and honed sleeve and spool for low internal leakage. Working pressure 350 bar.

Sectional view

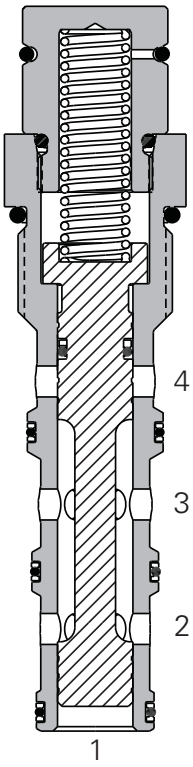

Description

This is a 3-way 2 position, high pressure pilot operated, directional control valve ideal for selecting a function when the pilot pressure is applied or removed.

Performance data

Ratings and specifications

Performance data is typical with fluid at 21,8 cST (105 SUS) and 49°C (120°F)	
Typical application pressure (all ports)	350 bar (5000 psi)
Cartridge fatigue pressure (infinite life)	350 bar (5000 psi)
Rated flow	76 L/min (20 USgpm)
Internal leakage	250 cc/min (15in³/min) @ 350 bar (5000 psi)
Temperature range	-40°to 120°C(-40° to 248°F)
Pilot pressures	**80**-5,5 bar (80 psi) **120**-8,3 bar (120 psi)
Pilot displacement volume	0,49 cm³ (0.02 in³)
Cavity	C-I2-4
Fluids	All general purpose hydraulic fluids such as: MIL-H-5606, SAE 10, SAE 20, etc.
Filtration	Cleanliness code 18/**16/13**
Standard housing materials	Aluminum, Steel
Weight cartridge only	0.32 kg (0.70 lbs)
Seal kit	02-160979 (Buna-N), 02-160980 (Viton®)

Viton is a registered trademark of E.I. DuPont

Pressure drop curves

Cartridge only

A - P3 to P2

B - P3 to P4

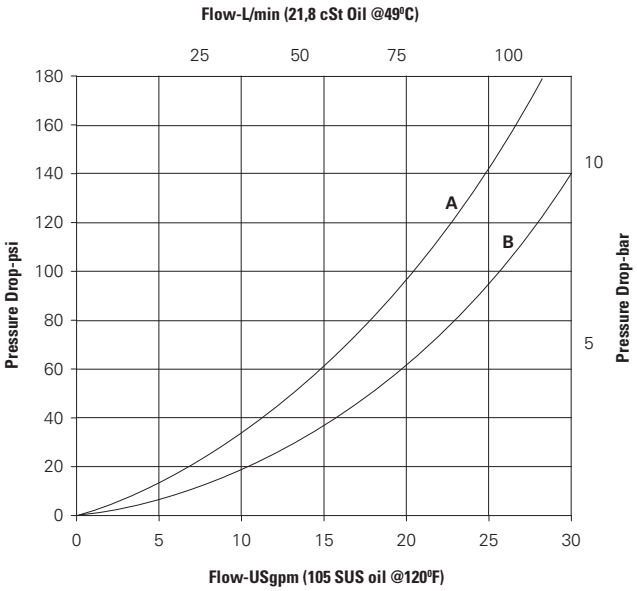

Where measurements are critical request certified drawings. We reserve the right to change specifications without notice.

PTS11-12 - Pilot to shift valve

Pilot operated, directional control valve
76 L/min (20 USgpm) • 350 bar (5000 psi)

Model code

PTS11 – 12 (V) – ** – *** – 00**

1 2 3 4 5 6

1 Function
PTS11 - Pilot to shift valve

2 Size
12 - 12 size

3 Seals
Blank - Buna-N
V - Viton®

4 Port size
0 - Cartridge only

Code	Port size	Housing number	
		Aluminum fatigue rated	Steel
A4G	1/2" BSPP	5986431-001	
A6G	3/4" BSPP	5986432-001	
A8H	SAE 8	5986433-001	
A10H	SAE 10	5986434-001	
A12H	SAE 12	5986436-001	
S6G	3/4" BSPP		5991073-001
S10H	SAE 10		5981074-001
S12H	SAE 12		5981075-001

See section J for housing details.

5 Pilot to shift (nominal)
80 - 5,5 bar (80 psi)
120 - 8,3 bar (120 psi)

6 Special features
00 - None (Only required if valve has special features, omitted if "00")
01 - External vent port with vent port option (SAE-4)

D

Dimensions

mm (inch)

Torque cartridge in aluminum housing 47-54 Nm (35-40 ft. lbs)

Torque cartridge in steel housing 68-75 Nm (50-55 ft. lbs)

Cartridge only

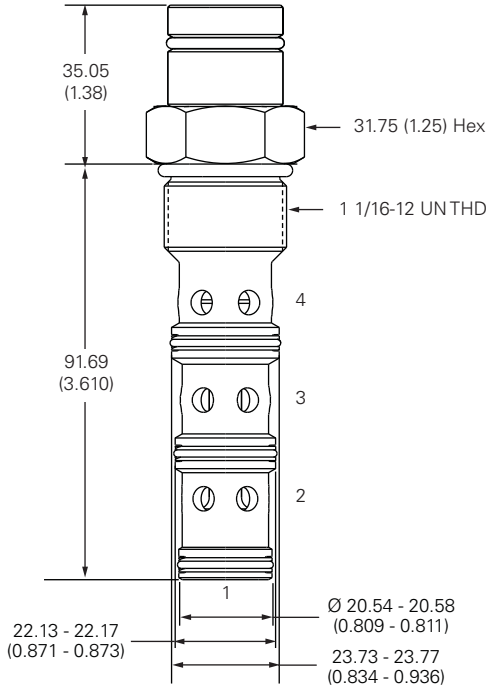

Installation drawing (steel)

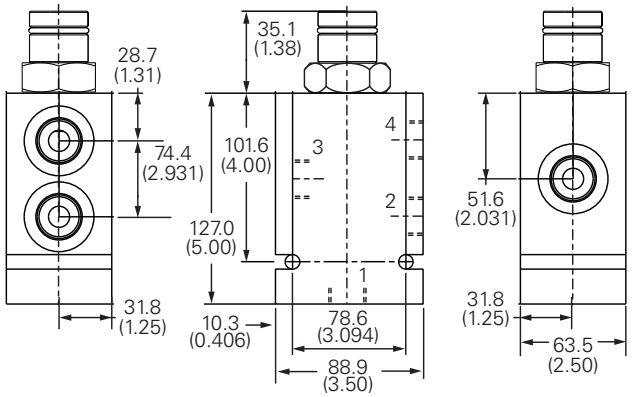

⚠ Warning

Aluminum housings can be used for pressures up to 210 bar (3000 psi). Steel housings must be used for operating pressures above 210 bar (3000 psi).

Where measurements are critical request certified drawings. We reserve the right to change specifications without notice.

PTS1 1-10 - Pilot to shift valve

Pilot operated, directional control valve
30 L/min (8 USgpm) • 350 bar (5000 psi)

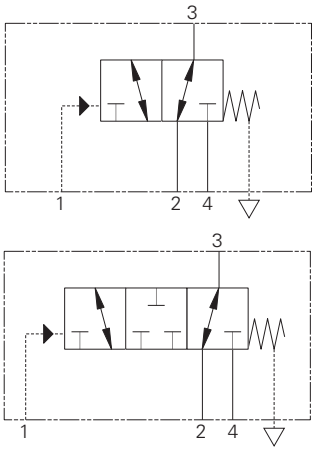

Operation

This valve allows flow between ports 2 and 3 while blocking port 4 until sufficient pressure has been applied to port 1 and the spring bias is overcome.

At this time, flow is directed between port 3 and port 4 while blocking port 2. During the cross-over transition, all ports are blocked. The spring chamber for this valve is externally vented to atmosphere.

Features

Hardened, ground and honed sleeve and spool for low internal leakage. Working pressure 350 bar.

Sectional view

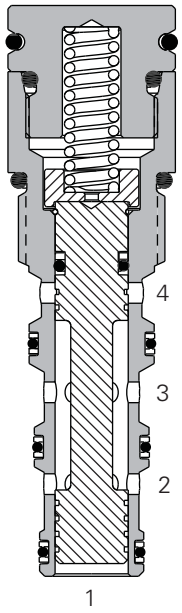

Description

This is a 3-way 2 position, high pressure pilot operated, directional control valve ideal for selecting a function when the pilot pressure is applied or removed.

Performance data

Ratings and specifications

Performance data is typical with fluid at 21,8 cST (105 SUS) and 49°C (120°F)	
Typical application pressure (all ports)	350 bar (5000 psi)
Cartridge fatigue pressure (infinite life)	350 bar (5000 psi)
Rated flow	30 L/min (8 USgpm)
Internal leakage	210 cc/min (13 in3/min) @ 210 bar (3000 psi)
Temperature range	-40° to 120°C (-40° to 248°F)
Pilot pressures	40 - 2,75 bar (40 psi) 80 - 5,5 bar (80 psi) 160 - 11,0 bar (160 psi)
Pilot displacement volume	0,49 cm3 (0.02 in3)
Cavity	C-10-4
Fluids All general purpose hydraulic fluids such as:	MIL-H-5606, SAE 10, SAE 20, etc.
Filtration Cleanliness code	18/**16/13**
Standard housing materials	Aluminum, Steel (5000 PSI)
Weight cartridge only	0,14 kg (0.32 lbs)
Seal kit	889625 (Buna-N), 566080 (Viton®)

Viton is a registered trademark of E.I. DuPont

Pressure drop curves

Cartridge only

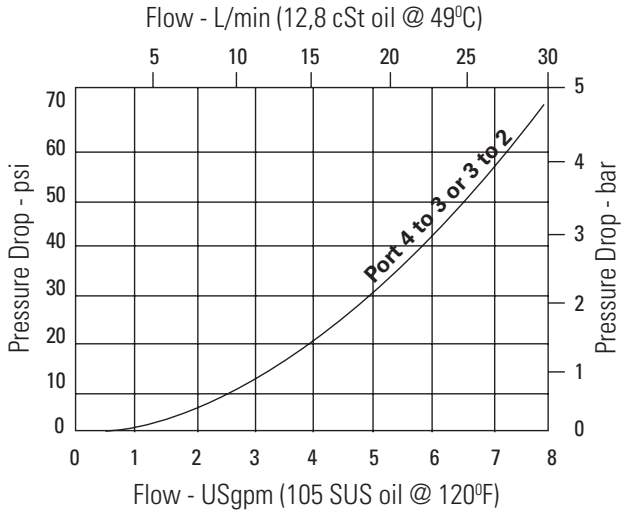

Where measurements are critical request certified drawings. We reserve the right to change specifications without notice.

PTS11-10 - Pilot to shift valve

Pilot operated, directional control valve
30 L/min (8 USgpm) • 350 bar (5000 psi)

Model code

PTS11 – 10 (V) – * – *** – 00**

1 2 3 4 5 6

1 Function

PTS11 - Pilot to shift valve

2 Size

10 - 10 Size

3 Seals

Blank - Buna-N
V - Viton®

4 Port size

0 - Cartridge only

Code	Port size	Housing number	
O		**Aluminum fatigue rated**	**Steel**
A2G	1/4" BSPP	02-185804	
A3G	3/8" BSPP	02-185805	
A6H	SAE 6	02-185802	
A8H	SAE 8	02-185803	
S2G	1/4" BSPP		02-175127
S3G	1/3" BSPP		02-175128
S6T	SAE 6		02-175124
S8T	SAE 8		02-175125

5 Pilot to shift (nominal)

40 - 2,75 bar (40 psi)
80 - 5,5 bar (80 psi)
160 - 11,0 bar (160 psi)

6 Special features

00 - None

(Only required if valve has special features, omitted if "00")

D

Dimensions

mm (inch)

Torque cartridge in housing
A - 47-54 Nm (35-40 ft. lbs)
S - 68-75 Nm (50-55 ft. lbs)

Cartridge only

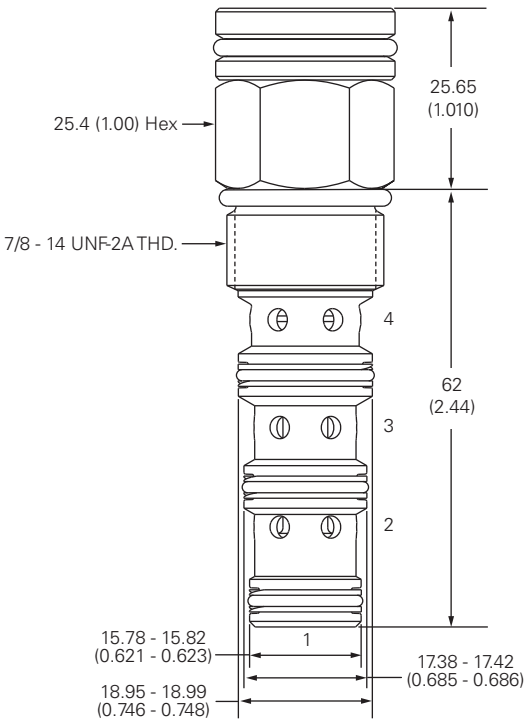

Installation drawing (steel)

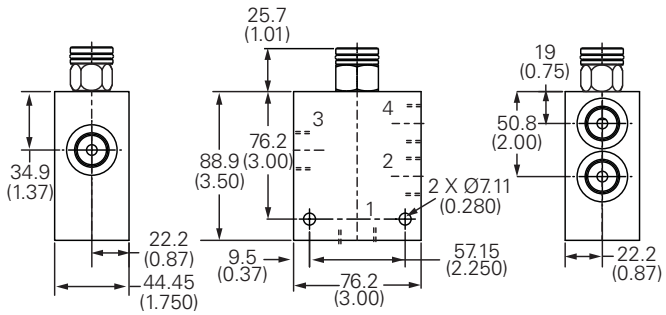

⚠ Warning

Aluminum housings can be used for pressures up to 210 bar (3000 psi). Steel housings must be used for operating pressures above 210 bar (3000 psi).

Where measurements are critical request certified drawings. We reserve the right to change specifications without notice.

PTS1-16 - Pilot to shift valve

Pilot operated, directional control valve
132 L/min (35 USgpm) • 210 bar (3000 psi)

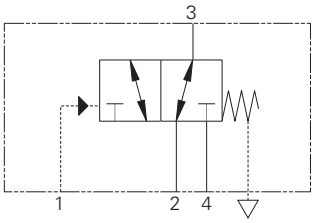

Operation

This valve allows flow between ports 2 and 3 while blocking port 4 until sufficient pressure has been applied to port 1 and the spring bias is overcome.

At this time, flow is directed between port 3 and port 4 while blocking port 2. During the cross-over transition, all ports are blocked. The spring chamber for this valve is externally vented to atmosphere.

Features

Hardened, ground and honed sleeve and spool for low internal leakage.

D

Sectional view

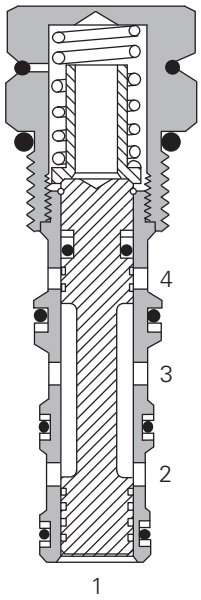

Performance data

Ratings and specifications

Performance data is typical with fluid at 21,8 cST (105 SUS) and 49°C (120°F)	
Typical application pressure (all ports)	210 bar (3000 psi)
Cartridge fatigue pressure (infinite life)	210 bar (3000 psi)
Rated flow	132 L/min (35 USgpm)
Internal leakage	164 cc/min (10 in^3/min) maximum @ 210 bar (3000 psi)
Temperature range	-40° to 120°C (-40° to 248°F)
Pilot pressures	40 - 2,75 bar (40 psi) 80 - 5,5 bar (80 psi) 160 - 11,0 bar (160 psi)
Pilot displacement volume	1,97 cm3 (0.12 in^3)
Cavity	C-16-4
Fluids	All general purpose hydraulic fluids such as: MIL-H-5606, SAE 10, SAE 20 etc.
Filtration	Cleanliness code 18/**16/13**
Standard housing materials	Aluminum
Weight cartridge only	0,5 kg (1.12 lbs)
Seal kit	889634 (Buna-N), 889638 (Viton®)

Viton is a registered trademark of E.I. DuPont

Description

This is a 3-way 2 position, pilot operated directional control valve ideal for selecting a function when the pilot pressure is applied or removed.

Pressure drop curves

Cartridge only

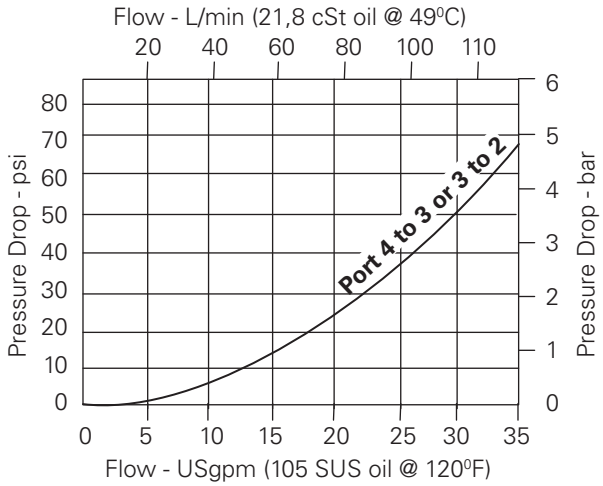

Where measurements are critical request certified drawings. We reserve the right to change specifications without notice.

PTS1-16 - Pilot to shift valve

Pilot operated, directional control valve
132 L/min (35 USgpm) • 210 bar (3000 psi)

Model code

PTS1 – 16 (V) – * – *** – 00**
1 2 3 4 5 6

1 Function

PTS1 - Pilot to shift valve

2 Size

16 - 16 size

3 Seal material

Blank - Buna-N
V - Viton®

4 Port size

0 - Cartridge only

Code	Port size	Housing number	
		Aluminium light duty	Aluminium fatigue rated
12T	SAE 12	566411	–
6B	3/4" BSPP	02-175468	–
10H	SAE 10	–	876729
12H	SAE 12	–	876731
4G	1/2" BSPP	–	876728
6G	3/4" BSPP	–	876730

See section J for housing details.

5 Pilot to shift (nominal)

40 - 2,75 bar (40 psi)
80 - 5,5 bar (80 psi)
160 - 11,0 bar (160 psi)

6 Special features

00 - None
(Only required if valve has special features, omitted if "00.")

D

Dimensions

mm (inch)

Torque cartridge in aluminum housing 108-122 Nm (80-90 ft. lbs)

Cartridge only

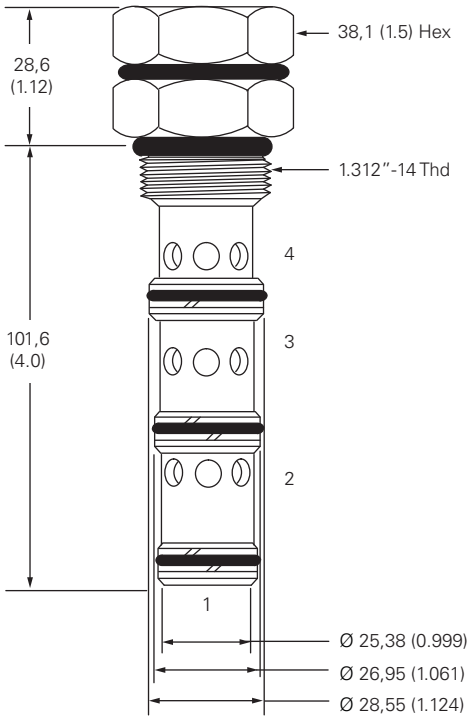

Installation drawing

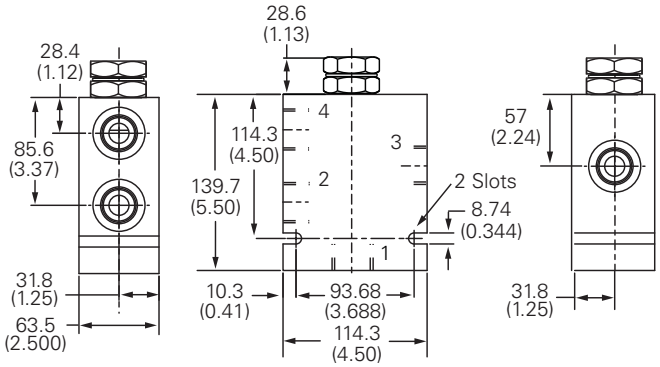

Where measurements are critical request certified drawings. We reserve the right to change specifications without notice.

PTS11-16 - Pilot to shift valve

Pilot operated, directional control valve
132 L/min (35 USgpm) • 350 bar (5000 psi)

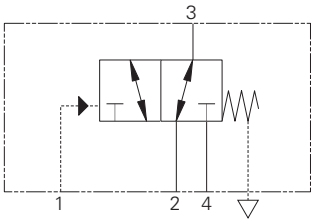

Operation

This valve allows flow between ports 2 and 3 while blocking port 4 until sufficient pressure has been applied to port 1 and the spring bias is overcome.

At this time, flow is directed between port 3 and port 4 while blocking port 2. During the cross-over transition, all ports are blocked. The spring chamber for this valve is externally vented to atmosphere.

Features

Hardened, ground and honed sleeve and spool for low internal leakage. Working pressure 350 bar.

D

Sectional view

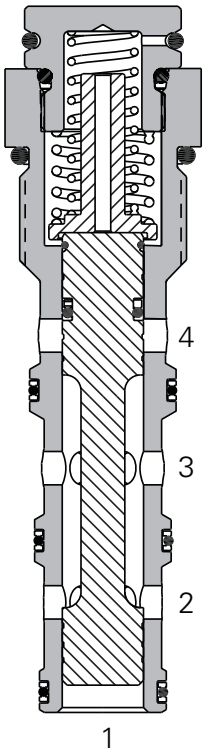

Description

This is a 3-way 2 position, high pressure pilot operated, directional control valve ideal for selecting a function when the pilot pressure is applied or removed.

Performance data

Ratings and specifications

Performance data is typical with fluid at 21,8 cST (105 SUS) and 49°C (120°F)	
Typical application pressure (all ports)	350 bar (5000 psi)
Cartridge fatigue pressure (infinite life)	350 bar (5000 psi)
Rated flow	132 L/min (35 USgpm)
Internal leakage	250 cc/min (15in³/min) @ 350 bar (5000 psi)
Temperature range	-40°to 120°C(-40° to 248°F)
Pilot pressures	**80** - 5,5 bar (80 psi) **160** - 11,0 bar (160 psi)
Pilot displacement volume	1,97 cm³ (0.12 in³)
Cavity	C-16-4
Fluids	All general purpose hydraulic fluids such as: MIL-H-5606, SAE 10, SAE 20, etc.
Filtration	Cleanliness code 18/**16/13**
Standard housing materials	Aluminum, Steel
Weight cartridge only	0.5 kg (1.12 lbs)
Seal kit	889634 (Buna-N), 889638 (Viton®)

Viton is a registered trademark of E.I. DuPont

Pressure drop curves

Cartridge only

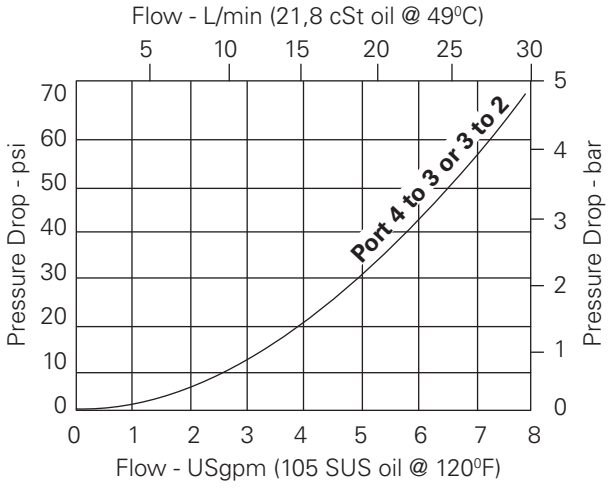

Where measurements are critical request certified drawings. We reserve the right to change specifications without notice.

PTS11-16 Pilot to shift valve

Pilot operated, directional control valve
132 L/min (35 USgpm) • 350 bar (5000 psi)

Model code

PTS11 – 16 – (V) – ** – *** – 00**

1 2 3 4 5 6

1 Function

PTS11 - Pilot to shift valve

2 Size

16 - 16 size

3 Seals

Blank - Buna-N
V - Viton®

4 Port size

0 - Cartridge only

Code	Port size	Housing number		
0		**Aluminum light duty**	**Aluminum fatigue rated**	**Steel**
A12T	SAE 12	566411		
A6B	3/4" BSPP	02-175468		
A10H	SAE 10		876729	
A12H	SAE 12		876731	
A4G	1/2" BSPP		876728	
A6G	3/4" BSPP		876730	
S4G	1/2" BSPP			02-175143
S6G	3/4" BSPP			02-175144
S10T	SAE 10			02-175141
S12T	SAE 12			02-175142

5 Pilot to shift (nominal)

80 - 5,5 bar (80 psi)
160 - 11 bar (160 psi)

6 Special features

00 - Non (Only required if valve has special features, omitted if "00")

D

Dimensions

mm (inch)

Torque cartridge in aluminum housing 108-122 Nm (80-90 ft. lbs)

Torque cartridge in steel housing 136-149 Nm (100-110 ft. lbs)

Cartridge only

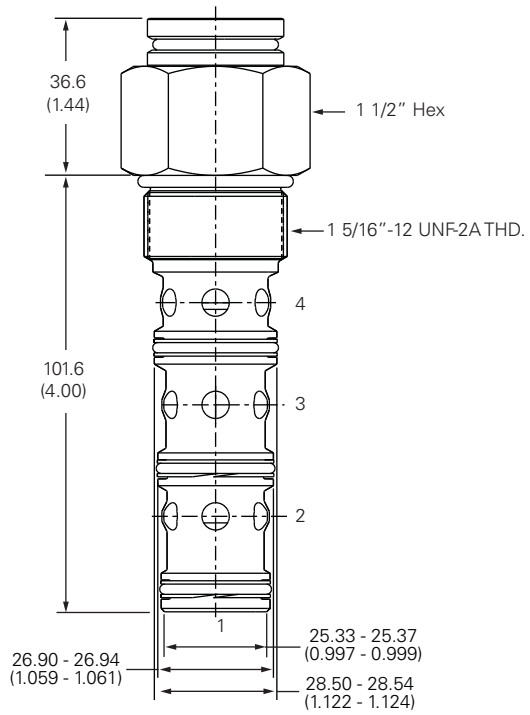

Installation drawing (steel)

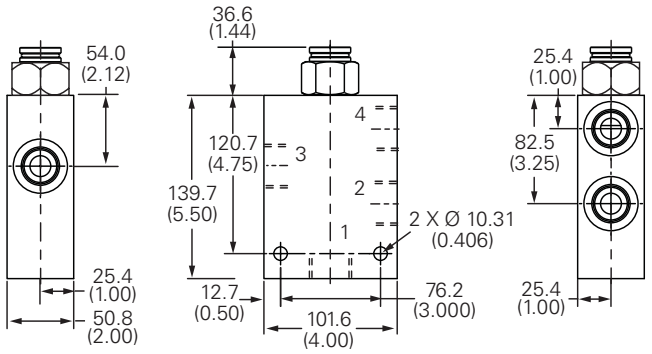

⚠ Warning

Aluminum housings can be used for pressures up to 210 bar (3000 psi). Steel housings must be used for operating pressures above 210 bar (3000 psi).

Where measurements are critical request certified drawings. We reserve the right to change specifications without notice.

PTS11-20 - Pilot to shift valve

Pilot operated, directional control valve
265 L/min (70 USgpm) • 210 bar (3000 psi)

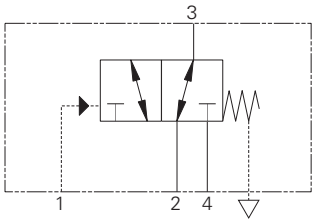

Operation

This valve allows flow between ports 2 and 3 while blocking port 4 until sufficient pressure has been applied to port 1 and the spring bias is overcome.

At this time, flow is directed between port 3 and port 4 while blocking port 2. During the cross-over transition, all ports are blocked. The spring chamber for this valve is externally vented to atmosphere.

Features

Hardened, ground and honed sleeve and spool for low internal leakage.

Sectional view

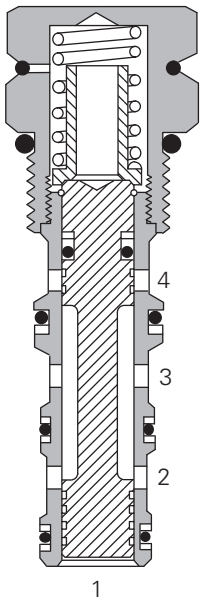

Performance data

Ratings and specifications

Performance data is typical with fluid at 21,8 cST (105 SUS) and 49°C (120°F)	
Typical application pressure (all ports)	210 bar (3000 psi)
Cartridge fatigue pressure (infinite life)	210 bar (3000 psi)
Rated flow	265 L/min (70 USgpm)
Internal leakage	164 cc/min (10 in^3/min) maximum @ 210 bar (3000 psi)
Temperature range	-40° to 120°C (-40° to 248°F)
Pilot pressures	40 - 2,75 bar (40 psi) 80 - 5,5 bar (80 psi)
Pilot displacement volume	6,72 cm^3 (0.41 in^3)
Cavity	C-20-4
Fluids	All general purpose hydraulic fluids such as: MIL-H-5606, SAE 10, SAE 20 etc.
Filtration	Cleanliness code 18/**16/13**
Standard housing materials	Aluminum
Weight cartridge only	1,1 kg (2.40 lbs)
Seal kit	565916 (Buna-N), 889646 (Viton®)

Viton is a registered trademark of E.I. DuPont

Description

This is a 3-way 2 position, pilot operated directional control valve ideal for selecting a function when the pilot pressure is applied or removed.

Pressure drop curves

Cartridge only

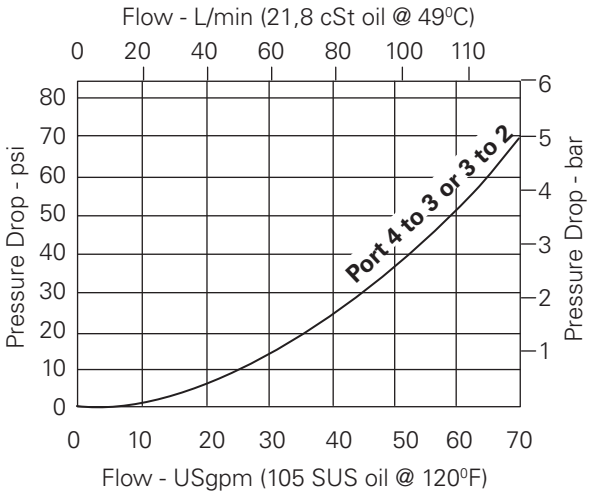

Where measurements are critical request certified drawings. We reserve the right to change specifications without notice.

PTS1-20 - Pilot to shift valve

Pilot operated, directional control valve
265 L/min (70 USgpm) • 210 bar (3000 psi)

Model code

PTS1 – 20 (V) – * – ** – 00**

1 2 3 4 5 6

1 Function

PTS1 - Pilot to shift valve

2 Size

20 - 20 size

3 Seal material

Blank - Buna-N
V - Viton®

4 Port size

0 - Cartridge only

Code	Port size	Housing number	
		Aluminium light duty	Aluminium fatigue rated
16T	SAE 16	566412	–
8B	1" BSPP	02-175469	–
12H	SAE 12	–	876745
16H	SAE 16	–	876747
6G	3/4" BSPP	–	876744
8G	1" BSPP	–	876746

See section J for housing details.

5 Pilot to Shift (Nominal)

40 - 2,75 bar (40 psi)
80 - 5,5 bar (80 psi)

6 Special features

00 - None
(Only required if valve has special features, omitted if "00.")

D

Dimensions

mm (inch)

Torque cartridge in aluminum housing
128-155 Nm (95-115 ft. lbs)

Cartridge only

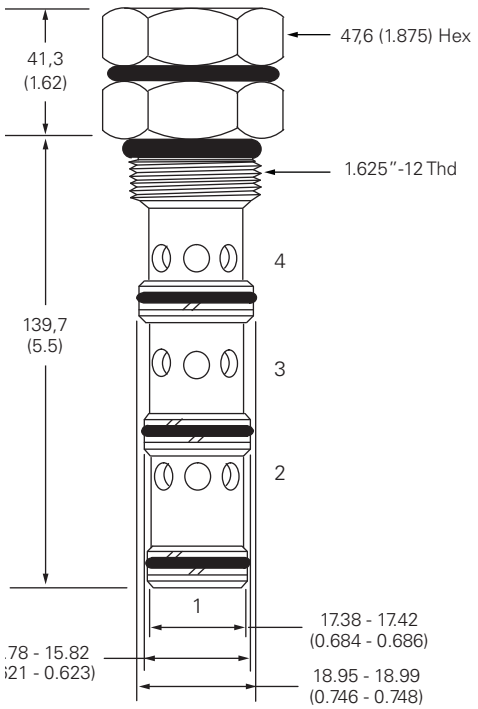

Installation drawing

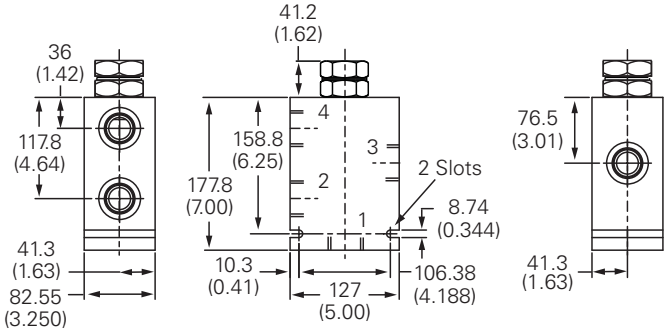

Where measurements are critical request certified drawings. We reserve the right to change specifications without notice.

PTS12-10 - Pilot to shift valve

Pilot operated, directional control valve
30 L/min (8 USgpm) • 350 bar (5000 psi)

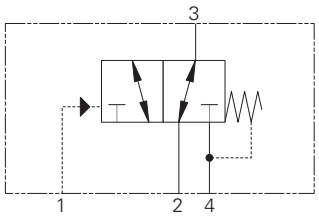

Operation

This valve allows flow between ports 2 and 3 while blocking port 4 until sufficient pressure has been applied to port 1 and the spring bias is overcome.

At this time, flow is directed between port 3 and port 4 while blocking port 2. During the cross-over transition, all ports are blocked. The spring chamber for this valve is externally vented to port 4.

Features

Hardened, ground and honed sleeve and spool for low internal leakage. Working pressure 350 bar.

Sectional view

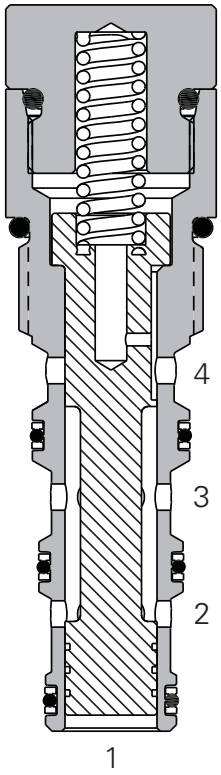

Description

This is a 3-way 2 position, high pressure pilot operated, directional control valve ideal for selecting a function when the pilot pressure is applied or removed.

Performance data

Ratings and specifications

Performance data is typical with fluid at 21,8 cST (105 SUS) and 49°C (120°F)	
Typical application pressure (all ports)	350 bar (5000 psi)
Cartridge fatigue pressure (infinite life)	350 bar (5000 psi)
Rated flow	30 L/min (8 USgpm)
Internal leakage	250 cc/min (15in³/min) @ 350 bar (5000 psi)
Temperature range	-40° to 120°C (-40° to 248°F)
Pilot pressures	40 - 2,75 bar (40 psi) 80 - 5,5 bar (80 psi) 160 - 11,0 bar (160 psi)
Pilot displacement volume	0,49 cm³ (0.02 in³)
Cavity	C-10-4
Fluids	All general purpose hydraulic fluids such as: MIL-H-5606, SAE 10, SAE 20, etc.
Filtration	Cleanliness code 18/**16/13**
Standard housing materials	Aluminum, Steel
Weight cartridge only	0,14 kg (0.32 lbs)
Seal kit	889625 (Buna-N), 566080 (Viton®)

Viton is a registered trademark of E.I. DuPont

Pressure drop curves

Cartridge only

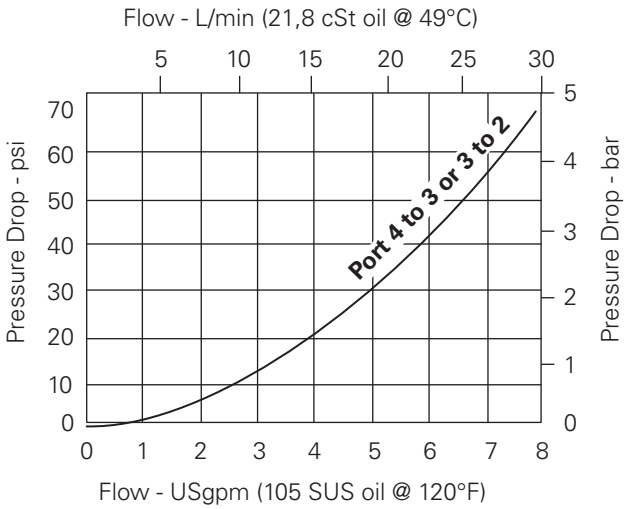

Where measurements are critical request certified drawings. We reserve the right to change specifications without notice.

PTS12-10 - Pilot to shift valve

Pilot operated, directional control valve
30 L/min (8 USgpm) • 350 bar (5000 psi)

Model code

PTS12 – 10 V – * – *** – 00**

1 2 3 4 5 6

1 Function

PTS12 - Pilot to shift valve

2 Size

10 - 10 size

3 Seals

Blank - Buna-N
V - Viton®

4 Port size

0 - Cartridge only

Code	Port size	Housing number	
0	**Fatigue rated**	**Aluminum**	**Steel**
A2G	1/4" BSPP	02-185804	
A3G	3/8" BSPP	02-185805	
A6H	SAE 6	02-185802	
A8H	SAE 8	02-185803	
S2G	1/4" BSPP		02-175139
S3G	3/8" BSPP		02-175140
S6T	SAE 6		02-175137
S8T	SAE 8		02-175138

See section J for housing details.

5 Pilot to shift (nominal)

40 - 2,75 bar (40 psi)
80 - 5,5 bar (80 psi)
120 - 8,3 bar (120 psi)

6 Special features

00 - Non (Only required if valve has special features, omitted if "00")

D

Dimensions

mm (inch)

Torque cartridge in aluminum housing 47-54 Nm (35-40 ft. lbs)

Torque cartridge in steel housing 68-75 Nm (100-110 ft. lbs)

Cartridge only

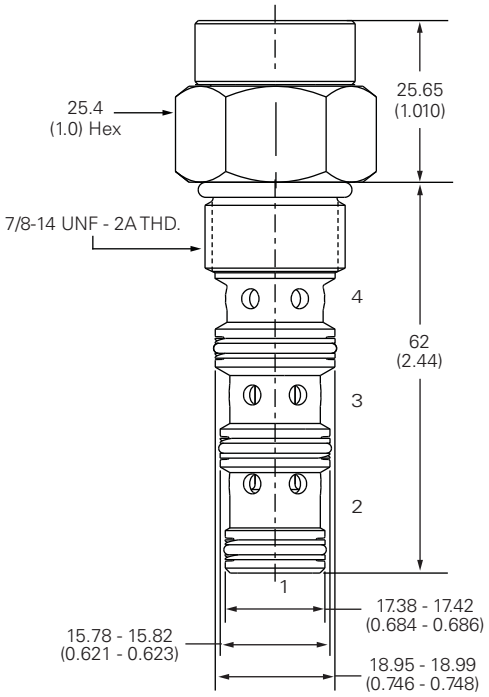

Installation drawing (steel)

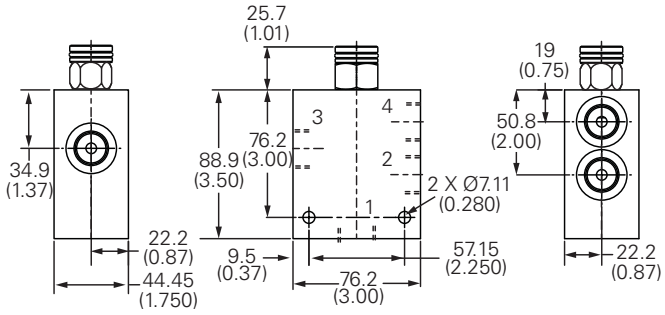

⚠ Warning

Aluminum housings can be used for pressures up to 210 bar (3000 psi). Steel housings must be used for operating pressures above 210 bar (3000 psi).

Where measurements are critical request certified drawings. We reserve the right to change specifications without notice.

PTS12-12 - Pilot to shift valve

Pilot operated, directional control valve
114 L/min (30 USgpm) • 350 bar (5000 psi)

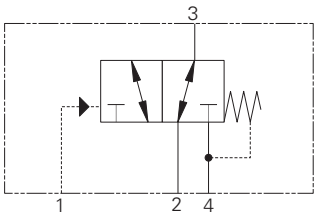

Operation

This valve allows flow between ports 2 and 3 while blocking port 4 until sufficient pressure has been applied to port 1 and the spring bias is overcome.

At this time, flow is directed between port 3 and port 4 while blocking port 2. During the cross-over transition, all ports are blocked. The spring chamber for this valve is vented to port 4.

Features

Hardened, ground and honed sleeve and spool for low internal leakage. Working pressure 350 bar.

Sectional view

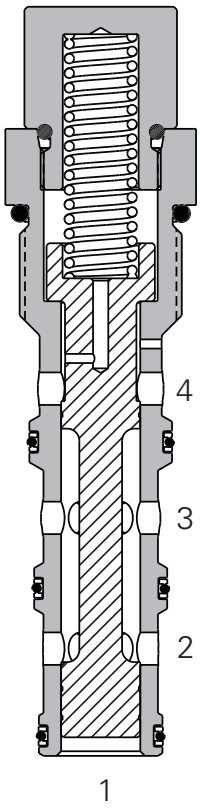

Description

This is a 3-way 2 position, high pressure pilot operated, directional control valve ideal for selecting a function when the pilot pressure is applied or removed.

Performance data

Ratings and specifications

Performance data is typical with fluid at 21,8 cST (105 SUS) and 49°C (120°F)	
Typical application pressure (all ports)	350 bar (5000 psi)
Cartridge fatigue pressure (infinite life)	350 bar (5000 psi)
Rated flow	114 L/min (30 USgpm)
Internal leakage	250 cc/min (15in³/min) @ 350 bar (5000 psi)
Temperature range	-40°to 120°C(-40° to 248°F)
Pilot pressures *Only for adjustable types	**80** - 5,5 bar (80 psi) **120** - 8,3 bar (120 psi) **160** - 11,0 bar (160 psi)*
Pilot displacement volume	0,49 cm³ (0.02 in³)
Cavity	C-I2-4
Fluids	All general purpose hydraulic fluids such as: MIL-H-5606, SAE 10, SAE 20, etc.
Filtration	Cleanliness code 18/**16/13**
Standard housing materials	Aluminum, Steel
Weight cartridge only	0.32 kg (0.70 lbs)
Seal kit	02-160979 (Buna-N), 02-160980 (Viton®)

Viton is a registered trademark of E.I. DuPont

Pressure drop curves

Cartridge only

A - P3 to P2

B - P3 to P4

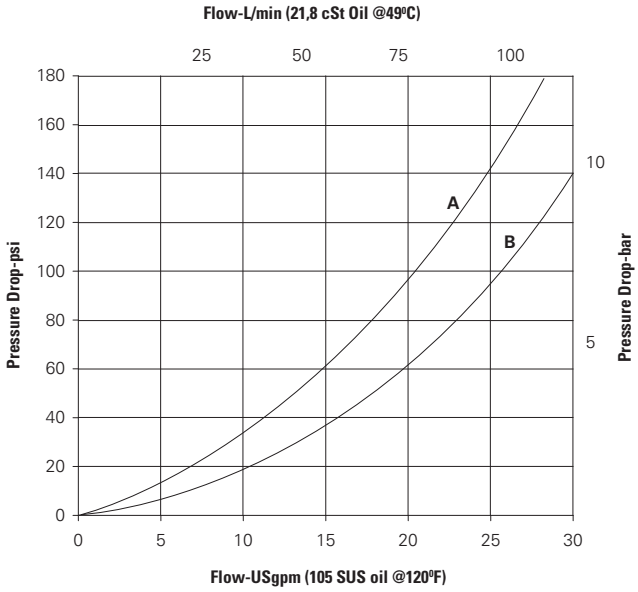

Where measurements are critical request certified drawings. We reserve the right to change specifications without notice.

PTS12-12 - Pilot to shift valve

Pilot operated, directional control valve
114 L/min (30 USgpm) • 350 bar (5000 psi)

Model code

PTS12 – 12 – V – * – *** – 00**

1 2 3 4 5 6

1 Function

PTS12 - Pilot to shift valve

2 Size

12 - 12 size

3 Seals

Blank - Buna-N
V - Viton®

4 Port size

0 - Cartridge only

Code	Port size	Housing number	
0		**Aluminum fatigue rated**	**Steel**
A4G	1/2" BSPP	5986431-001	
A6G	3/4" BSPP	5986432-001	
A8H	SAE 8	5986433-001	
A10H	SAE 10	5986434-001	
A12H	SAE 12	5986436-001	
S6G	3/4" BSPP		5991073-001
S10H	SAE 10		5981074-001
S12H	SAE 12		5981075-001

5 Pilot to shift (nominal)

80 - 5,5 bar (80 psi)
120 - 8,3 bar (120 psi)
160 - 8,3 bar (160 psi)*
*Only for adjustable types

6 Special features

04 - "F Type" fixed type
03 - "C Type" cap adjustable type
05 - "K Type" knob adjustable type
06 - "S Type" screw adjustable type

D

Dimensions

mm (inch)

Torque cartridge in aluminum housing 81-95 Nm (60-70 ft. lbs)

Torque cartridge in steel housing 102-115 Nm (75-85 ft. lbs)

Cartridge only

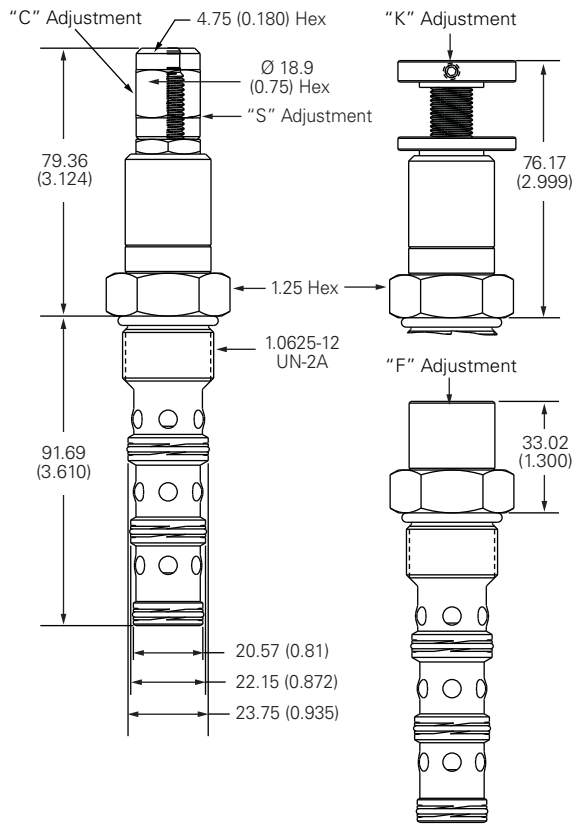

Installation drawing (steel)

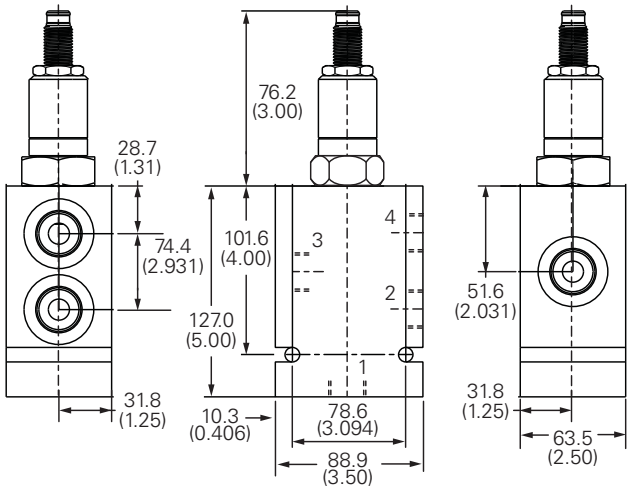

⚠ Warning

Aluminum housings can be used for pressures up to 210 bar (3000 psi). Steel housings must be used for operating pressures above 210 bar (3000 psi).

Where measurements are critical request certified drawings. We reserve the right to change specifications without notice.

PTS2-16 - Pilot to shift valve

Pilot operated, directional control valve
132 L/min (35 USgpm) • 210 bar (3000 psi)

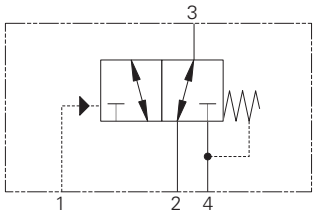

Operation

This valve allows flow between ports 2 and 3 while blocking port 4 until sufficient pressure has been applied to port 1 and the spring bias is overcome.

At this time, flow is directed between port 3 and port 4 while blocking port 2. During the cross-over transition, all ports are blocked. The spring chamber for this valve is vented to port 4.

Features

Hardened, ground and honed sleeve and spool for low internal leakage.

Sectional view

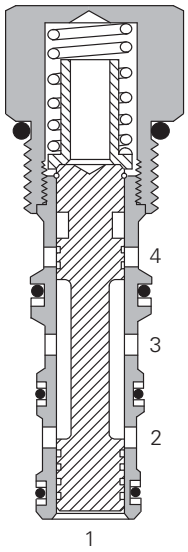

Performance data

Ratings and specifications

Performance data is typical with fluid at 21,8 cST (105 SUS) and 49°C (120°F)	
Typical application pressure (all ports)	210 bar (3000 psi)
Cartridge fatigue pressure (infinite life)	210 bar (3000 psi)
Rated flow	132 L/min (35 USgpm)
Internal leakage	164 cc/min (10 in^3/min) maximum @ 210 bar (3000 psi)
Temperature range	-40° to 120°C (-40° to 248°F)
Pilot pressures	**40** - 2,75 bar (40 psi) **80** - 5,5 bar (80 psi) **160** - 11,0 bar (160 psi)
Pilot displacement volume	1,97 cm^3 (0.12 in^3)
Cavity	C-16-4
Fluids	All general purpose hydraulic fluids such as: MIL-H-5606, SAE 10, SAE 20, etc.
Filtration	Cleanliness code 18/**16/13**
Standard housing materials	Aluminum, Steel
Weight cartridge only	0,5 kg (1.12 lbs)
Seal kit	889634 (Buna-N), 889638 (Viton®)

Viton is a registered trademark of E.I. DuPont

Description

This is a 3-way 2 position, pilot operated directional control valve ideal for selecting a function when the pilot pressure is applied or removed.

Pressure drop curves

Cartridge only

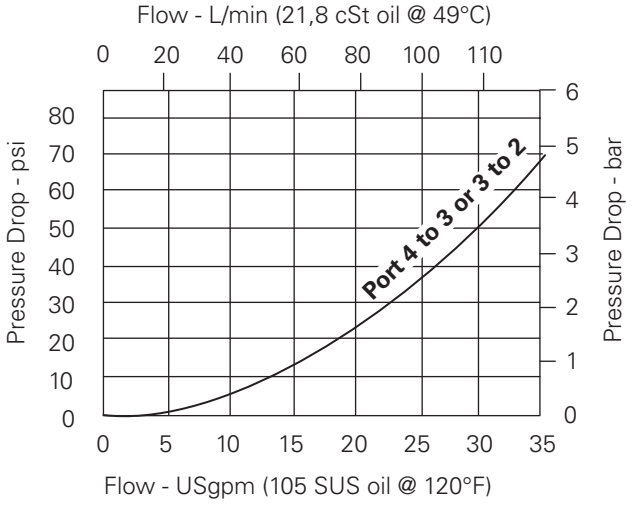

Where measurements are critical request certified drawings. We reserve the right to change specifications without notice.

PTS2-16 - Pilot to shift valve

Pilot operated, directional control valve
132 L/min (35 USgpm) • 210 bar (3000 psi)

Model code

PTS2 – 16 (V) – * – *** – 00**

1 2 3 4 5 6

1 Function

PTS2 - Pilot to shift valve

2 Size

16 - 16 size

3 Seal material

Blank - Buna-N
V - Viton

4 Port size

Code	Port size	Housing number		
		Aluminum light duty	Aluminum fatigue rated	Steel
0	Cartridge			
A12T	SAE 12	566411	–	–
A6B	3/4" BSPP	02-175468	–	–
A10H	SAE 10	–	876729	–
A12H	SAE 12	–	876731	–
A4G	1/2" BSPP	–	876728	–
A6G	3/4" BSPP	–	876730	–
S4G	1/2" BSPP	–	–	02-175143
S6G	3/4" BSPP	–	–	02-175144
S10T	SAE 10	–	–	02-175141
S12T	SAE 12	–	–	02-175142

See section J for housing details.

5 Pilot to shift (nominal)

40 - 2,75 bar (40 psi)
80 - 5,5 bar (80 psi)
160 - 11,0 bar (160 psi)

6 Special features

00 - None
(Only required if valve has special features, omitted if "00".)

D

Dimensions

mm (inch)

Torque cartridge in aluminum housing 47-54 Nm (35-40 ft. lbs)

Cartridge only

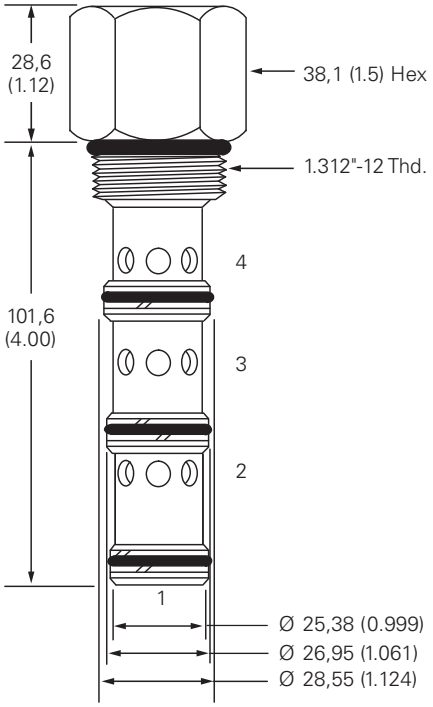

Installation drawing (aluminum)

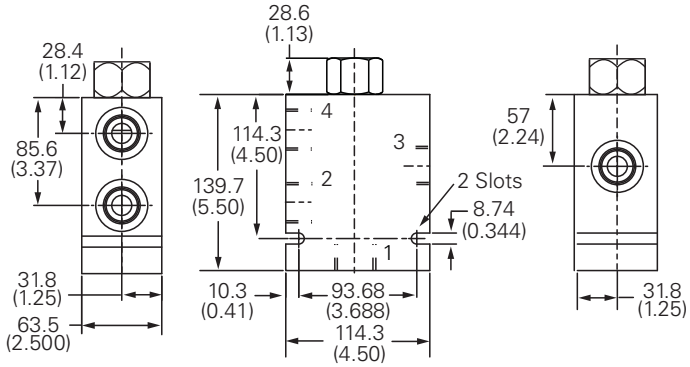

Where measurements are critical request certified drawings. We reserve the right to change specifications without notice.

PTS12-16 - Pilot to shift valve

Pilot operated, directional control valve
132 L/min (35 USgpm) • 350 bar (5000 psi)

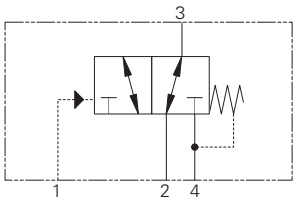

Operation

This valve allows flow between ports 2 and 3 while blocking port 4 until sufficient pressure has been applied to port 1 and the spring bias is overcome.

At this time, flow is directed between port 3 and port 4 while blocking port 2. During the cross-over transition, all ports are blocked. The spring chamber for this valve is vented to port 4.

Features

Hardened, ground and honed sleeve and spool for low internal leakage. Working pressure 350 bar.

Sectional view

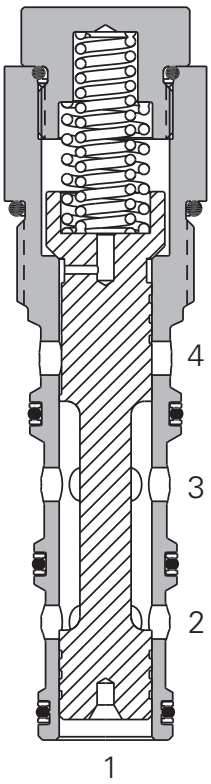

Description

This is a 3-way 2 position, high pressure pilot operated, directional control valve ideal for selecting a function when the pilot pressure is applied or removed.

Performance data

Ratings and specifications

Performance data is typical with fluid at 21,8 cST (105 SUS) and 49°C (120°F)	
Typical application pressure (all ports)	350 bar (5000 psi)
Cartridge fatigue pressure (infinite life)	350 bar (5000 psi)
Rated flow	132 L/min (35 USgpm)
Internal leakage	550 cc/min (34 in^3/min) @ 350 bar (5000 psi)
Temperature range	-40° to 120° C(-40° to 248°F)
Pilot pressures	**80** - 5,5 bar (80 psi) **160** - 11,0 bar (160 psi)
Pilot displacement volume	1,97 cm^3 (0.12 in^3)
Cavity	C-I6-4
Fluids	All general purpose hydraulic fluids such as: MIL-H-5606, SAE 10, SAE 20, etc.
Filtration	Cleanliness code 18/**16/13**
Standard housing materials	Aluminum, Steel
Weight cartridge only	0,5 kg (1.12 lbs)
Seal kit	889634 (Buna-N), 889638 (Viton®)

Viton is a registered trademark of E.I. DuPont.

Pressure drop curves

Cartridge only

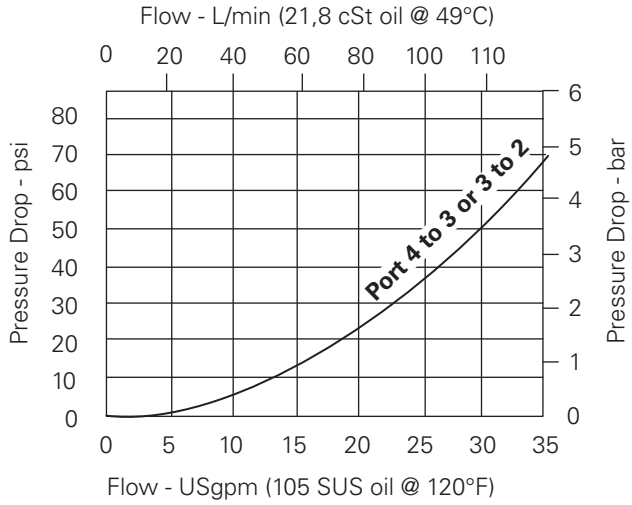

Where measurements are critical request certified drawings. We reserve the right to change specifications without notice.

PTS12-16 - Pilot to shift valve

Pilot operated, directional control valve
132 L/min (35 USgpm) • 350 bar (5000 psi)

Model code

PTS12 – 16 – (V) – * – *** – 00**

1 2 3 4 5 6

1 Function

PTS12 - Pilot to shift valve

2 Size

16 - 16 size

3 Seals

Blank - Buna-N
V - Viton®

4 Port size

0 - Cartridge only

Code	Port size	Housing number		
		Aluminum light duty	Aluminum fatigue rated	Steel
A12T	SAE 12	566411		
A6B	3/4" BSPP	02-175468		
A10H	SAE 10		876729	
A12H	SAE 12		876731	
A4G	1/2" BSPP		876728	
A6G	3/4" BSPP		876730	
S4G	1/2" BSPP			02-175143
S6G	3/4" BSPP			02-175144
S10T	SAE 10			02-175141
S12T	SAE 12			02-175142

See section J for housing details.

5 Pilot to shift (nominal)

160 - 11,0 bar (160 psi)

6 Special features

00 - None
(Only required if valve has special features, omitted if "00")

D

Dimensions

mm (inch)

Torque cartridge in aluminum housing 108-122 Nm (80-90 ft. lbs)

Torque cartridge in steel housing 136-149 Nm (100-110 ft. lbs)

Cartridge only

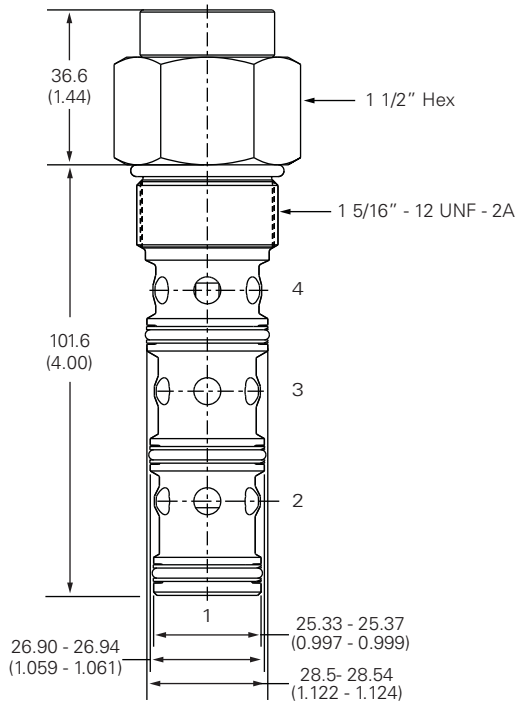

Installation drawing (steel)

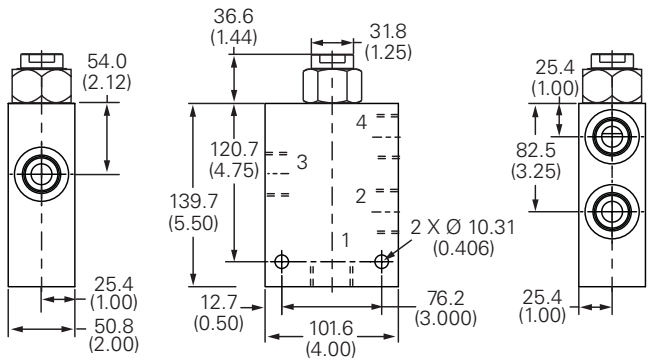

⚠ Warning

Aluminum housings can be used for pressures up to 210 bar (3000 psi). Steel housings must be used for operating pressures above 210 bar (3000 psi).

Where measurements are critical request certified drawings. We reserve the right to change specifications without notice.

PTS2-20 - Pilot to shift valve

Pilot operated, directional control valve
265 L/min (70 USgpm) • 210 bar (3000 psi)

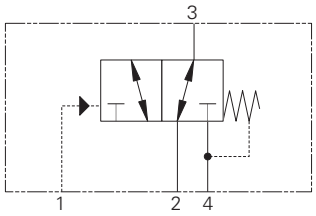

Operation

This valve allows flow between ports 2 and 3 while blocking port 4 until sufficient pressure has been applied to port 1 and the spring bias is overcome.

At this time, flow is directed between port 3 and port 4 while blocking port 2. During the cross-over transition, all ports are blocked. The spring chamber for this valve is vented to port 4.

Features

Hardened, ground and honed sleeve and spool for low internal leakage.

Sectional view

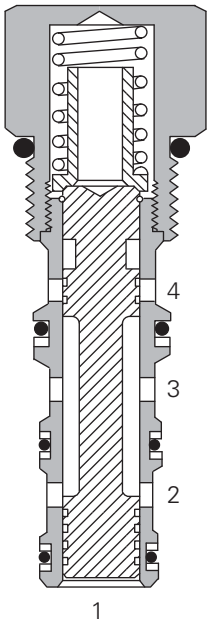

Description

This is a 3-way 2 position, pilot operated directional control valve ideal for selecting a function when the pilot pressure is applied or removed.

Performance data

Ratings and specifications

Performance data is typical with fluid at 21,8 cST (105 SUS) and 49°C (120°F)	
Typical application pressure (all ports)	210 bar (3000 psi)
Cartridge fatigue pressure (infinite life)	210 bar (3000 psi)
Rated flow	265 L/min (70 USgpm)
Internal leakage	164 cc/min (10 in^3/min) maximum @ 210 bar (3000 psi)
Temperature range	-40° to 120°C (-40° to 248°F)
Pilot pressures	**40** - 2,75 bar (40 psi) **80** - 5,5 bar (80 psi)
Pilot displacement volume	6,72 cm^3 (0.41 in^3)
Cavity	C-20-4
Fluids	All general purpose hydraulic fluids such as: MIL-H-5606, SAE 10, SAE 20 etc.
Filtration	Cleanliness code 18/**16/13**
Standard housing material	Aluminum
Weight cartridge only	0,5 kg (1.12 lbs)
Seal kit	565916 (Buna-N), 889646 (Viton®)

Viton is a registered trademark of E.I. DuPont.

Pressure drop curves

Cartridge only

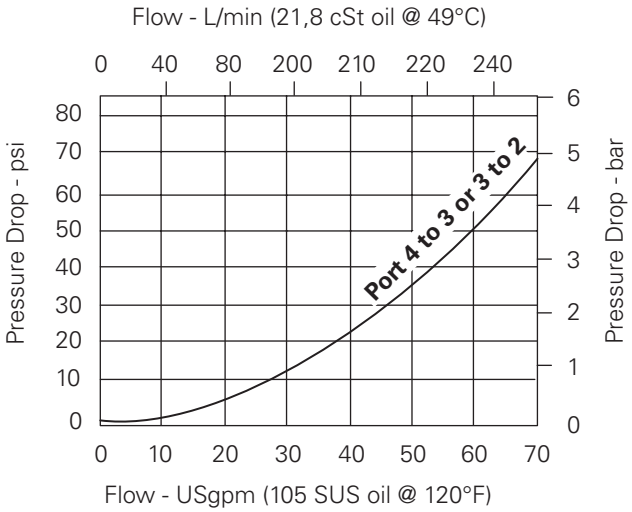

Where measurements are critical request certified drawings. We reserve the right to change specifications without notice.

PTS2-20 - Pilot to shift valve

Pilot operated, directional control valve
265 L/min (70 USgpm) • 210 bar (3000 psi)

Model code

PTS2 – 20 (V) – * – ** – 00**

1 2 3 4 5 6

1 Function
PTS2 - Pilot to shift valve

2 Size
20 - 20 size

3 Seal material
Blank - Buna-N
V - Viton

4 Port size

Code	Port size	Housing number	
		Aluminum light duty	Aluminium fatigue rated
0	Cartridge		
16T	SAE 16	566412	–
8B	1" BSPP	02-175469	–
12H	SAE 12	–	876745
16H	SAE 16	–	876747
6G	3/4" BSPP	–	876744
8G	1" BSPP	–	876746

See section J for housing details.

5 Pilot to shift (nominal)
40 - 2,75 bar (40 psi)
80 - 5,5 bar (80 psi)

6 Special features
00 - None
(Only required if valve has special features, omitted if "00".)

D

Dimensions
mm (inch)

Torque cartridge in aluminum housing
128-155 Nm (95-115 ft lbs)

Cartridge only

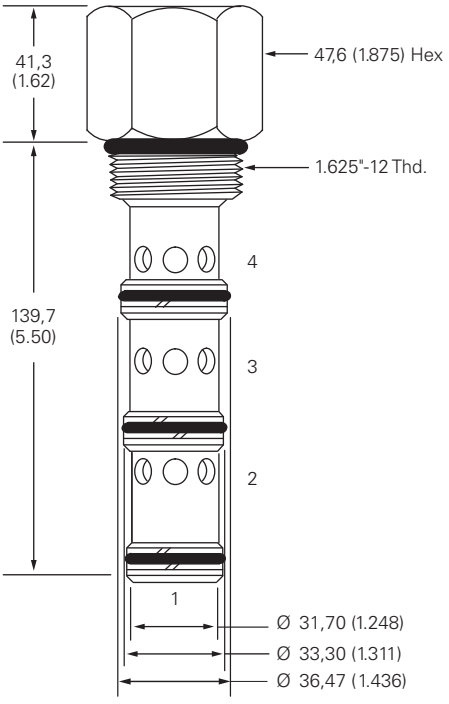

Installation drawing

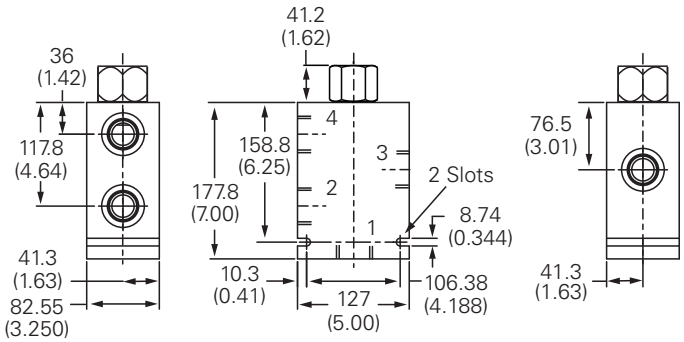

Where measurements are critical request certified drawings. We reserve the right to change specifications without notice.

PTS13-10 - Pilot to shift valve

Pilot operated, directional control valve
30 L/min (8 USgpm) • 350 bar (5000 psi)

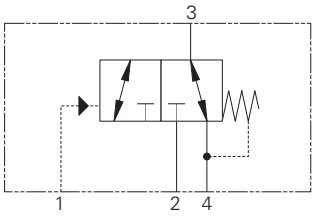

Operation

This valve allows flow between ports 3 and 4 while blocking port 2 until sufficient pressure has been applied to port 1 and the spring bias is overcome.

At this time, flow is directed between port 2 and port 3 while blocking port 4. During the cross-over transition, all ports are blocked. The spring chamber for this valve is vented to port 4.

Features

Hardened, ground and honed sleeve and spool for low internal leakage. Working pressure 350 bar.

Sectional view

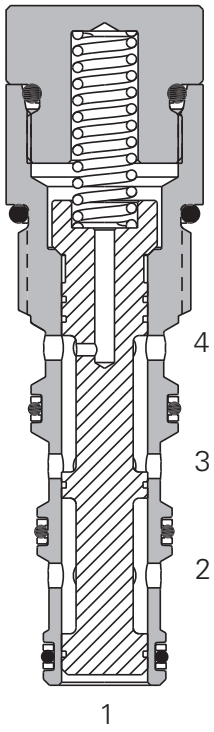

Description

This is a 3-way 2 position, high pressure pilot operated, directional control valve ideal for selecting a function when the pilot pressure is applied or removed.

Performance data

Ratings and specifications

Performance data is typical with fluid at 21,8 cST (105 SUS) and 49°C (120°F)	
Typical application pressure (all ports)	350 bar (5000 psi)
Cartridge fatigue pressure (infinite life)	350 bar (5000 psi)
Rated flow	30 L/min (8 USgpm)
Internal leakage	210 cc/min (13in³/min) @ 350 bar (5000 psi)
Temperature range	-40° to 120° C(-40° to 248°F)
Pilot pressures	**40** - 2,75 bar (40 psi) **80** - 5,5 bar (80 psi) **160** - 11,0 bar (160 psi)
Pilot displacement volume	0,49 cm³ (0.02 in³)
Cavity	C-10-4
Fluids	All general purpose hydraulic fluids such as: MIL-H-5606, SAE 10, SAE 20, etc.
Filtration	Cleanliness code 18/**16/13**
Standard housing materials	Aluminum or Steel
Weight cartridge only	0,14 kg (0.32 lbs)
Seal kit	889625 (Buna-N), 566080 (Viton®)

Viton is a registered trademark of E.I. DuPont

Pressure drop curves

Cartridge only

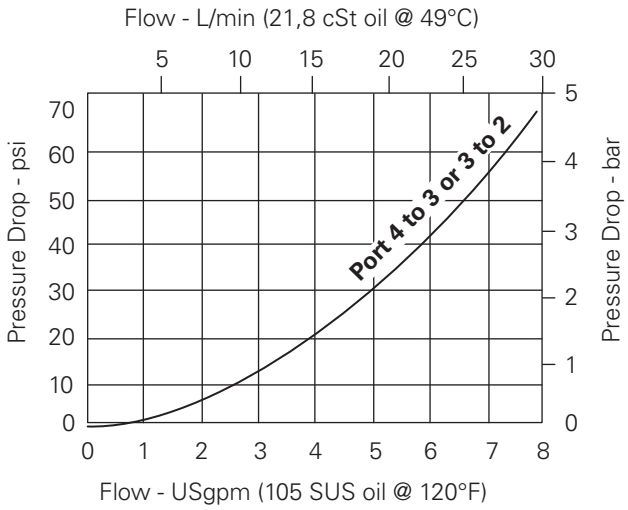

Where measurements are critical request certified drawings. We reserve the right to change specifications without notice.

PTS13-10 - Pilot to shift valve

Pilot operated, directional control valve
30 L/min (8 USgpm) • 350 bar (5000 psi)

Model code

PTS13 – 10 – (V) – ** – *** – 00**

1 2 3 4 5 6

1 Function

PTS13 - Pilot to shift valve

2 Size

10 - 10 size

3 Seals

Blank - Buna-N
V - Viton®

4 Port size

0 - Cartridge only

Code	Port size	Housing number		
		Aluminum light duty	Aluminum fatigue rated	Steel
A3B	3/8" BSPP	02-179705		
A6T	SAE 6	566161		
A2G	1/4" BSPP		02-185804	
A3G	3/8" BSPP		02-185805	
A6H	SAE 6		02-185802	
A8H	SAE 8		02-185803	
S2G	1/4" BSPP			02-175139
S3G	3/8" BSPP			02-175140
S6T	SAE 6			02-175137
S8T	SAE 8			02-175138

See section J for housing details.

5 Pilot to shift (nominal)

40 - 2,75 bar (40 psi)
80 - 5,5 bar (80 psi)
160 - 11,0 bar (160 psi)

6 Special features

00 - None
(Only required if valve has special features, omitted if "00")

D

Dimensions

mm (inch)

Torque cartridge in aluminum housing 47-54 Nm (35-40 ft. lbs)

Torque cartridge in steel housing 136-149 Nm (100-110 ft. lbs)

Cartridge only

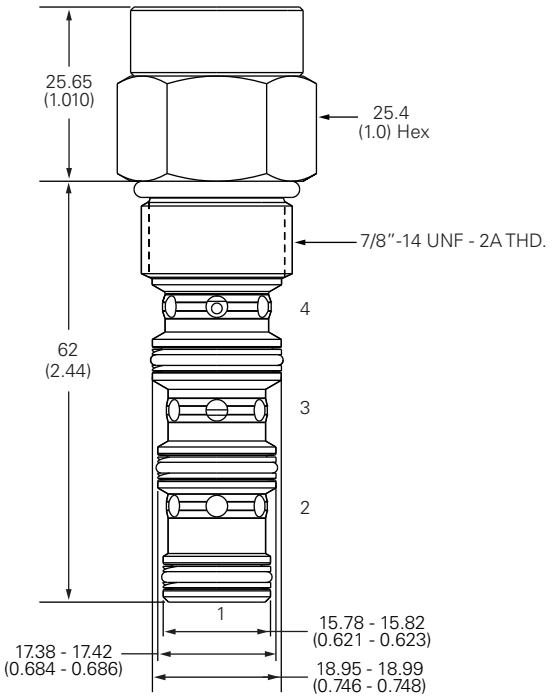

Installation drawing (Steel)

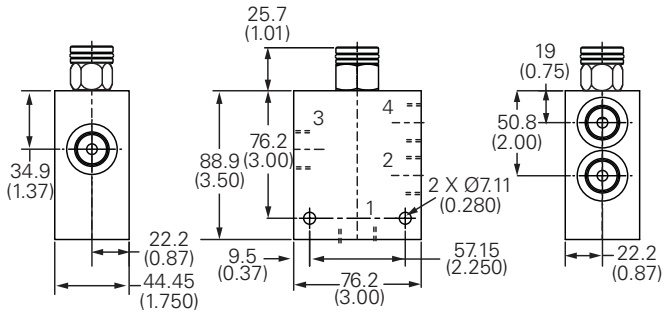

⚠ Warning

Aluminum housings can be used for pressures up to 210 bar (3000 psi). Steel housings must be used for operating pressures above 210 bar (3000 psi).

Where measurements are critical request certified drawings. We reserve the right to change specifications without notice.

PTS13-12 - Pilot to shift valve

Pilot operated, directional control valve
114 L/min (30 USgpm) • 350 bar (5000 psi)

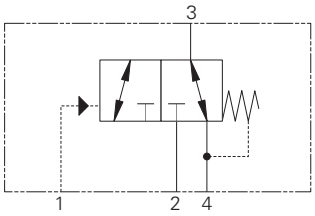

Operation

This valve allows flow between ports 3 and 4 while blocking port 2 until sufficient pressure has been applied to port 1 and the spring bias is overcome.

At this time, flow is directed between port 2 and port 3 while blocking port 4. During the cross-over transition, all ports are blocked. The spring chamber for this valve is vented to port 4.

Features

Hardened, ground and honed sleeve and spool for low internal leakage. Working pressure 350 bar.

Sectional view

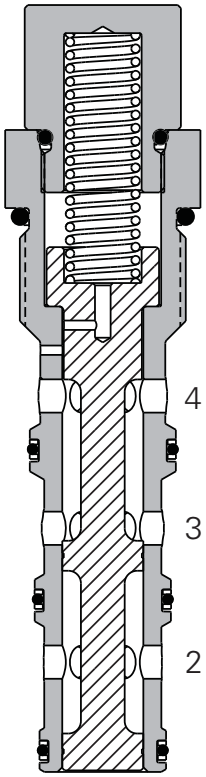

Description

This is a 3-way 2 position, high pressure pilot operated, directional control valve ideal for selecting a function when the pilot pressure is applied or removed.

Performance data

Ratings and specifications

Performance data is typical with fluid at 21,8 cST (105 SUS) and 49°C (120°F)	
Typical application pressure (all ports)	350 bar (5000 psi)
Cartridge fatigue pressure (infinite life)	350 bar (5000 psi)
Rated flow	113 L/min (30 USgpm)
Internal leakage	210 cc/min (13in³/min) @ 350 bar (5000 psi)
Temperature range	-40° to 120° C(-40° to 248°F)
Pilot pressures	**80** - 5,5 bar (80 psi) **120** - 8,3 bar (120 psi) **160** - 11,0 bar (160 psi)
Pilot displacement volume	0,49 cm³ (0.02 in³)
Cavity	C-I2-4
Fluids	All general purpose hydraulic fluids such as: MIL-H-5606, SAE 10, SAE 20, etc.
Filtration	Cleanliness code 18/**16/13**
Standard housing materials	Aluminum or Steel
Weight cartridge only	0.32 kg (0.70 lbs)
Seal kit	02-160979 (Buna-N), 02-160980 (Viton®)

Viton is a registered trademark of E.I. DuPont.

Pressure drop curves

Cartridge only

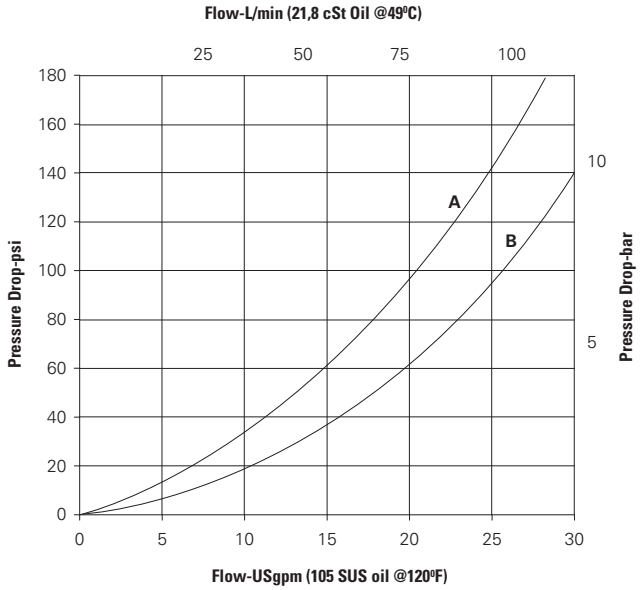

Where measurements are critical request certified drawings. We reserve the right to change specifications without notice.

PTS13-12 - Pilot to shift valve

Pilot operated, directional control valve
114 L/min (30 USgpm) • 350 bar (5000 psi)

Model code

PTS13 – 12 – (V) – ** – *** – 00**

1 2 3 4 5 6

1 Function

PTS13 - Pilot to shift valve

2 Size

12 - 12 size

3 Seals

Blank - Buna-N
V - Viton®

4 Port size

0 - Cartridge only

Code	Port size	Housing number	
		Aluminum	Steel
A4G	1/2" BSPP	5986431-001	
A6G	3/4" BSPP	5986432-001	
A8H	SAE 8	5986433-001	
A10H	SAE 10	5986434-001	
A12H	SAE 12	5986436-001	
S6G	3/4" BSPP		5991073-001
S10T	SAE 10		5991074-001
S12T	SAE 12		5991075-001

See section J for housing details.

5 Pilot to shift (nominal)

80 - 5,5 bar (80 psi)
120 - 8,3 bar (120 psi)
160 - 11,0 bar (160 psi)

6 Special features

04 - 'F Type' fixed type w/closed transition
03 - 'C Type' cap adjustable type w/closed transition
05 - 'K Type' knob adjustable type w/closed transition
06 - 'S Type' screw adjustable type w/closed transition
09 - 'F Type' fixed type w/open transition

Dimensions

mm (inch)

Torque cartridge in aluminum housing 81-95 Nm (60-70 ft. lbs)

Torque cartridge in steel housing 102-115 Nm (75-85 ft. lbs)

Cartridge only

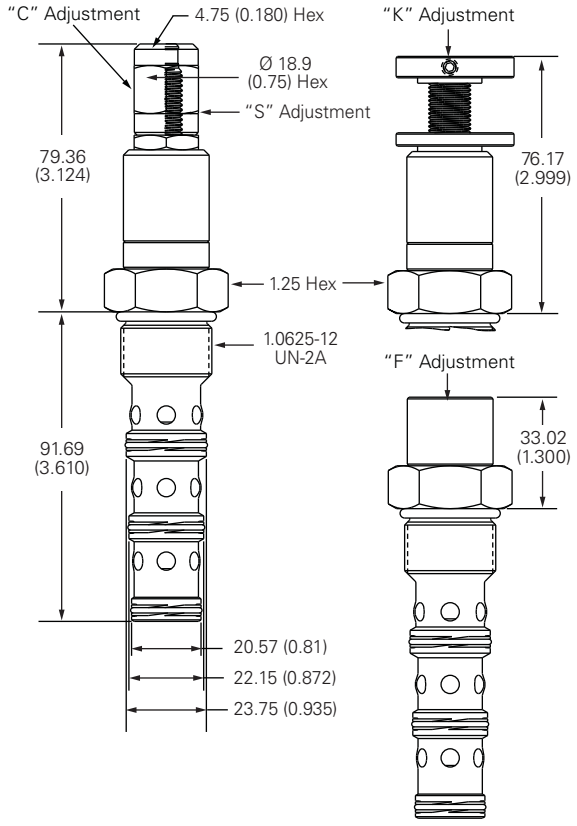

Installation drawing (steel)

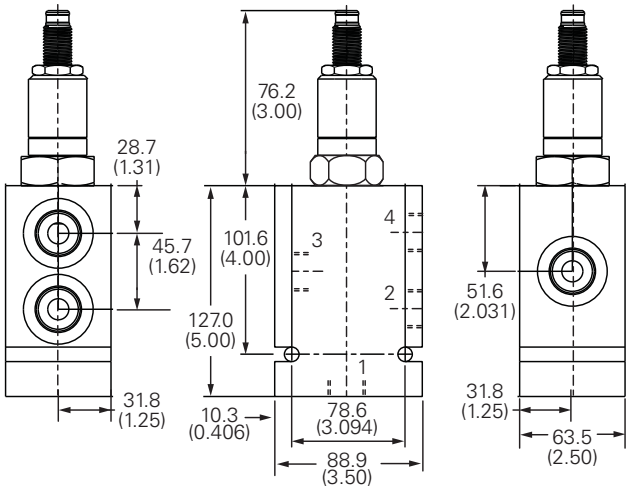

⚠ Warning

Aluminum housings can be used for pressures up to 210 bar (3000 psi). Steel housings must be used for operating pressures above 210 bar (3000 psi).

Where measurements are critical request certified drawings. We reserve the right to change specifications without notice.

PTS3-16 - Pilot to shift valve

Pilot operated, directional control valve
132 L/min (35 USgpm) • 210 bar (3000 psi)

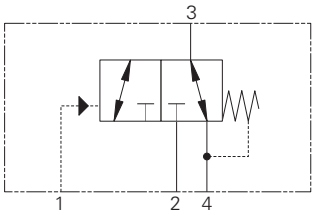

Operation

This valve allows flow between ports 3 and 4 while blocking port 2 until sufficient pressure has been applied to port 1 and the spring bias is overcome.

At this time, flow is directed between port 2 and port 3 while blocking port 4. During the cross-over transition, all ports are blocked. The spring chamber for this valve is vented to port 4.

Features

Hardened, ground and honed sleeve and spool for low internal leakage.

Sectional view

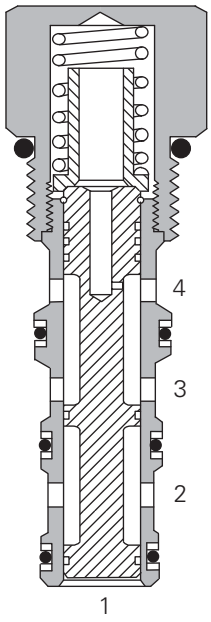

Performance data

Ratings and specifications

Performance data is typical with fluid at 21,8 cST (105 SUS) and 49°C (120°F)	
Typical application pressure (all ports)	210 bar (3000 psi)
Cartridge fatigue pressure (infinite life)	210 bar (3000 psi)
Rated flow	132 L/min (35 USgpm)
Internal leakage	164 cc/min (10 in^3/min) maximum @ 210 bar (3000 psi)
Temperature range	-40° to 120°C (-40° to 248°F)
Pilot pressures	**40** - 2,75 bar (40 psi) **80** - 5,5 bar (80 psi) **160** - 11,0 bar (160 psi)
Pilot displacement volume	1,97 cm^3 (0.12 in^3)
Cavity	C-16-4
Fluids	All general purpose hydraulic fluids such as: MIL-H-5606, SAE 10, SAE 20, etc.
Filtration	Cleanliness code 18/**16/13**
Standard housing materials	Aluminum
Weight cartridge only	0,5 kg (1.12 lbs)
Seal kit	889634 (Buna-N), 889638 (Viton®)

Viton is a registered trademark of E.I. DuPont

Description

This is a 3-way 2 position, pilot operated directional control valve ideal for selecting a function when the pilot pressure is applied or removed.

Pressure drop curves

Cartridge only

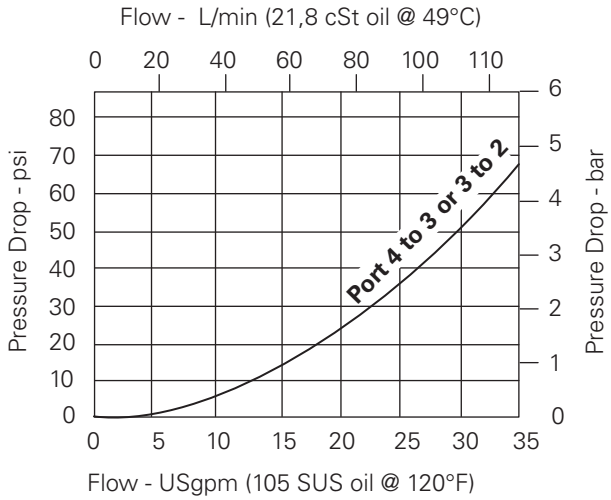

Where measurements are critical request certified drawings. We reserve the right to change specifications without notice.

PTS3-16 - Pilot to shift valve

Pilot operated, directional control valve
132 L/min (35 USgpm) • 210 bar (3000 psi)

Model code

PTS3 – 16 (V) – ** – *** – 00**

1 2 3 4 5 6

1 Function

PTS3 - Pilot to shift valve

2 Size

16 - 16 size

3 Seal material

Blank - Buna-N
V - Viton®

4 Port size

Code	Port size	Housing number		
		Aluminum light duty	Aluminum fatigue rated	Steel
0	Cartridge			
A12T	SAE 12	566411	–	–
A6B	3/4" BSPP	02-175468	–	–
A10H	SAE 10	–	876729	–
A12H	SAE 12	–	876731	–
A4G	1/2" BSPP	–	876728	–
A6G	3/4" BSPP	–	876730	–

See section J for housing details.

5 Pilot to shift (nominal)

40 - 2,75 bar (40 psi)
80 - 5,5 bar (80 psi)
160 - 11,0 bar (160 psi)

6 Special features

00 - None

(Only required if valve has special features, omitted if "00".)

D

Dimensions

mm (inch)

Torque cartridge in aluminum housing 108-122 Nm (80-90 ft. lbs)

Cartridge only

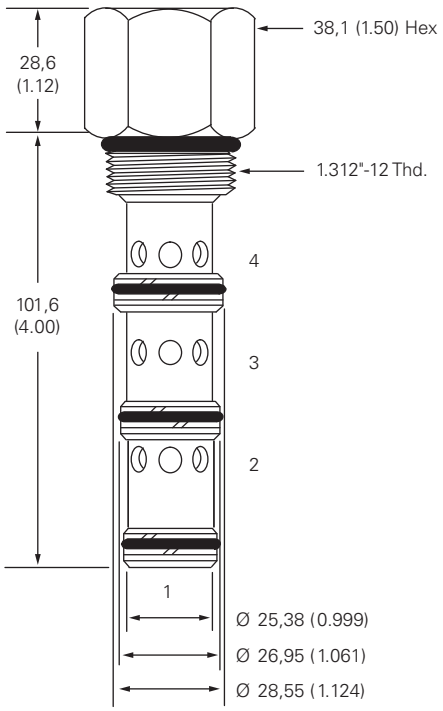

Installation drawing (Aluminum)

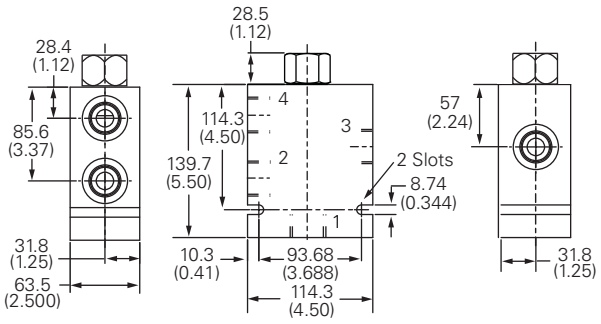

⚠ Warning

Aluminum housings can be used for pressures up to 210 bar (3000 psi). Steel housings must be used for operating pressures above 210 bar (3000 psi).

Where measurements are critical request certified drawings. We reserve the right to change specifications without notice.

PTS13-16 - Pilot to shift valve

Pilot operated, directional control valve
132 L/min (35 USgpm) • 350 bar (5000 psi)

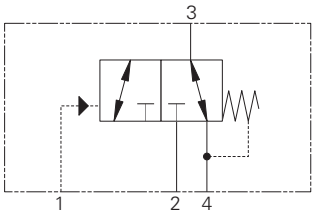

Operation

This valve allows flow between ports 3 and 4 while blocking port 2 until sufficient pressure has been applied to port 1 and the spring bias is overcome.

At this time, flow is directed between port 2 and port 3 while blocking port 4. During the cross-over transition, all ports are blocked. The spring chamber for this valve is vented to port 4.

Features

Hardened, ground and honed sleeve and spool for low internal leakage. Working pressure 350 bar.

Sectional view

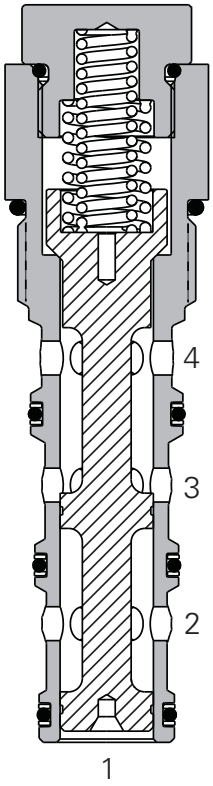

Description

This is a 3-way 2 position, high pressure pilot operated, directional control valve ideal for selecting a function when the pilot pressure is applied or removed.

Performance data

Ratings and specifications

Performance data is typical with fluid at 21,8 cST (105 SUS) and 49°C (120°F)	
Typical application pressure (all ports)	350 bar (5000 psi)
Cartridge fatigue pressure (infinite life)	350 bar (5000 psi)
Rated flow	132 L/min (35 USgpm)
Internal leakage	210 cc/min (13in³/min) @ 350 bar (5000 psi)
Temperature range	-40° to 120°C (-40° to 248°F)
Pilot pressures	**80** - 5,5 bar (80 psi) **160** - 11,0 bar (160 psi)
Pilot displacement volume	1,97 cm³ (0.12 in³)
Cavity	C-I6-4
Fluids	All general purpose hydraulic fluids such as: MIL-H-5606, SAE 10, SAE 20, etc.
Filtration	Cleanliness code 18/**16/13**
Standard housing materials	Aluminum or Steel
Weight cartridge only	0,5 kg (1.12 lbs)
Seal kit	889634 (Buna-N), 889638 (Viton®)

Viton is a registered trademark of E.I. DuPont

Pressure drop curves

Cartridge only

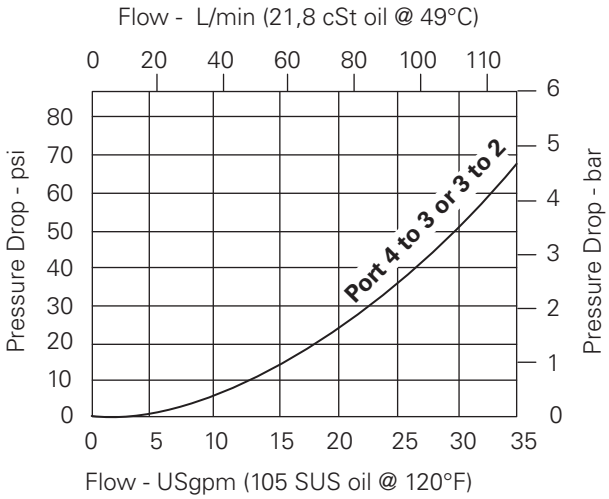

Where measurements are critical request certified drawings. We reserve the right to change specifications without notice.

PTS13-16 - Pilot to shift valve

Pilot operated, directional control valve
132 L/min (35 USgpm) • 350 bar (5000 psi)

Model code

PTS13 – 16 (V) – ** – *** – 00**

1 2 3 4 5 6

1 Function

PTS13 - Pilot to shift valve

2 Size

16 - 16 size

3 Seals

Blank - Buna-N
V - Viton®

4 Port size

0 - Cartridge only

Code	Port size	Housing number		
		Aluminum light duty	Aluminum fatigue rated	Steel
A12T	SAE 12	566411		
A6B	3/4" BSPP		02-175468	
A10H	SAE 10		876729	
A12H	SAE 12		876731	
A4G	1/2" BSPP		876728	
A6G	3/4" BSPP		876730	
S4G	1/2" BSPP			02-175143
S6G	1/4" BSPP			02-175144
S10T	SAE 10			02-175141
S12T	SAE 12			02-175142

See section J for housing details.

5 Pilot to shift (nominal)

80 - 5,5 bar (80 psi)
160 - 11,0 bar (160 psi)

6 Special features

00 - None

(Only required if valve has special features, omitted if "00")

D

Dimensions

mm (inch)

Torque cartridge in aluminum housing 108-122 Nm (80-90 ft. lbs)

Torque cartridge in steel housing 136-149.6 Nm (100-110 ft. lbs)

Cartridge only

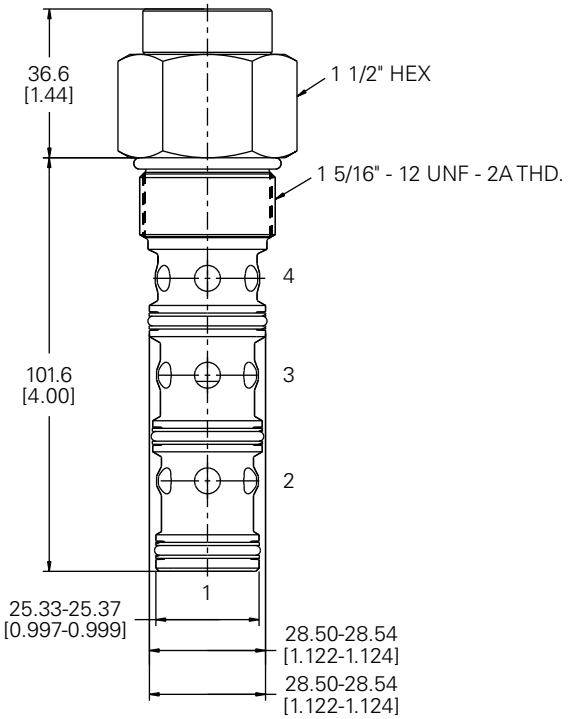

Installation drawing (Steel)

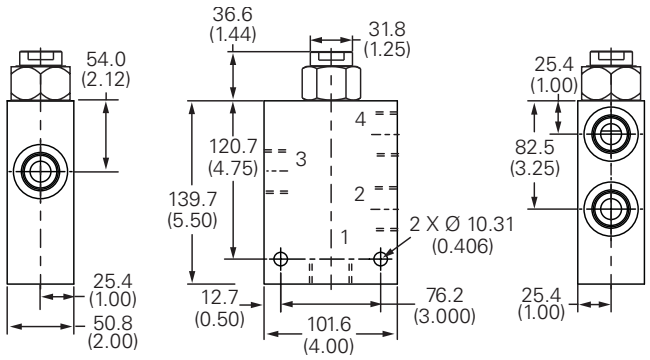

⚠ Warning

Aluminum housings can be used for pressures up to 210 bar (3000 psi). Steel housings must be used for operating pressures above 210 bar (3000 psi).

Where measurements are critical request certified drawings. We reserve the right to change specifications without notice.

PTS3-20 - Pilot to shift valve

Pilot operated, directional control valve
265 L/min (70 USgpm) • 210 bar (3000 psi)

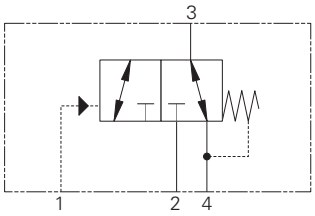

Operation

This valve allows flow between ports 3 and 4 while blocking port 2 until sufficient pressure has been applied to port 1 and the spring bias is overcome.

At this time, flow is directed between port 2 and port 3 while blocking port 4. During the cross-over transition, all ports are blocked. The spring chamber for this valve is vented to port 4.

Features

Hardened, ground and honed sleeve and spool for low internal leakage.

Sectional view

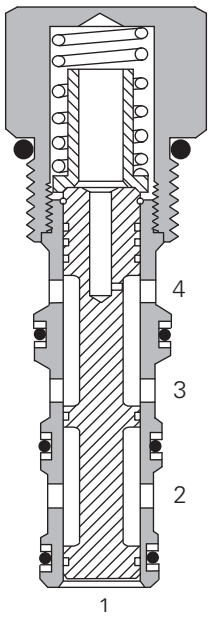

Performance data

Ratings and specifications

Performance data is typical with fluid at 21,8 cST (105 SUS) and 49°C (120°F)	
Typical application pressure (all ports)	210 bar (3000 psi)
Cartridge fatigue pressure (infinite life)	210 bar (3000 psi)
Rated flow	265 L/min (70 USgpm)
Internal leakage	164 cc/min (10 in^3/min) maximum @ 210 bar (3000 psi)
Temperature range	-40° to 120°C (-40° to 248°F)
Pilot pressures	**40** - 2,75 bar (40 psi) **80** - 5,5 bar (80 psi)
Pilot displacement volume	6,72 cm^3 (0.41 in^3)
Cavity	C-20-4
Fluids	All general purpose hydraulic fluids such as: MIL-H-5606, SAE 10, SAE 20 etc.
Filtration	Cleanliness code 18/**16/13**
Standard housing material	Aluminum
Weight cartridge only	0,5 kg (1.12 lbs)
Seal kit	565916 (Buna-N), 889646 (Viton®)

Viton is a registered trademark of E.I. DuPont

Description

This is a 3-way 2 position, pilot operated directional control valve ideal for selecting a function when the pilot pressure is applied or removed.

Pressure drop curves

Cartridge only

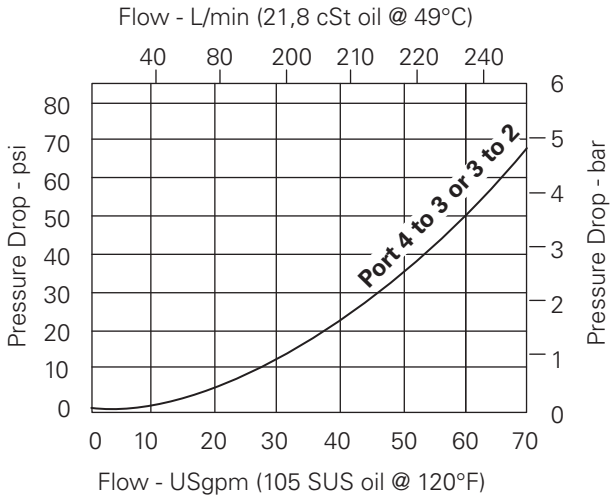

Where measurements are critical request certified drawings. We reserve the right to change specifications without notice.

PTS3-20 - Pilot to shift valve

Pilot operated, directional control valve
265 L/min (70 USgpm) • 210 bar (3000 psi)

Model code

PTS3 – 20 (V) – * – ** – 00**

1 2 3 4 5 6

1 Function

PTS3 - Pilot to shift valve

2 Size

20 - 20 size

3 Seal material

Blank - Buna-N
V - Viton®

4 Port size

Code	Port size	Housing number	
		Aluminum light duty	Aluminum fatigue rated
0	Cartridge only		
16T	SAE 16	566412	–
8B	1" BSPP	02-175469	–
12H	SAE 12	–	876745
16H	SAE 16	–	876747
6G	3/4" BSPP	–	876744
8G	1" BSPP	–	876746

See section J for housing details.

5 Pilot to shift (nominal)

40 - 2,75 bar (40 psi)
80 - 5,5 bar (80 psi)

6 Special features

00 - None

(Only required if valve has special features, omitted if "00".)

D

Dimensions

mm (inch)

Torque cartridge in aluminum housing
129-155 Nm (95-115 ft lbs)

Cartridge only

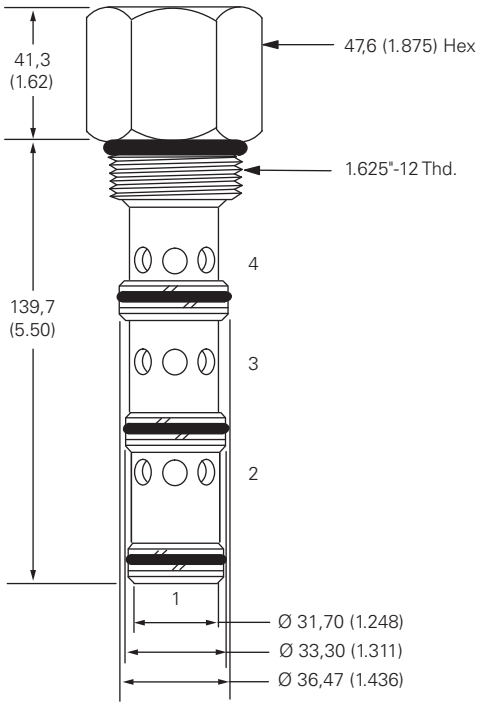

Installation drawing

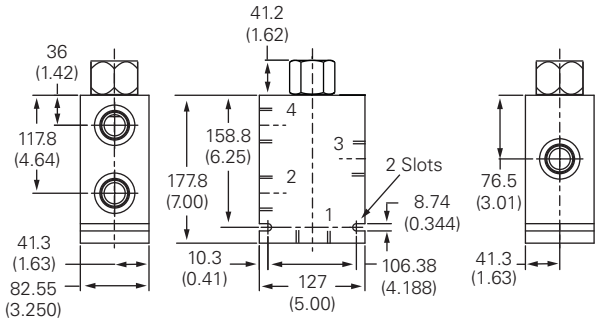

Where measurements are critical request certified drawings. We reserve the right to change specifications without notice.

PTS14-12 - Pilot to shift valve

Pilot operated, directional control valve
114 L/min (30 USgpm) • 350 bar (5000 psi)

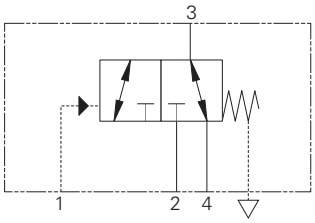

Operation

This valve allows flow between ports 3 and 4 while blocking port 2 until sufficient pressure has been applied to port 1 and the spring bias is overcome.

At this time, flow is directed between port 2 and port 3 while blocking port 4. During the cross-over transition, all ports are blocked. The spring chamber for this valve is externally vented to atmosphere.

Features

Hardened, ground and honed sleeve and spool for low internal leakage. Working pressure 350 bar.

Sectional view

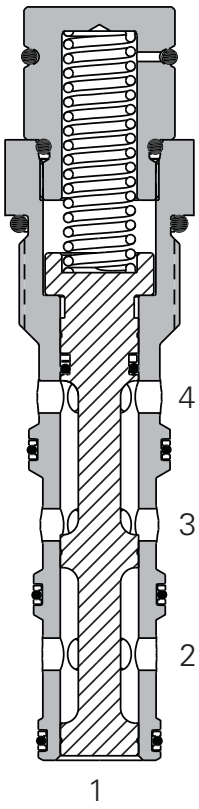

Description

This is a 3-way 2 position, high pressure pilot operated, directional control valve ideal for selecting a function when the pilot pressure is applied or removed.

Performance data

Ratings and specifications

Performance data is typical with fluid at 21,8 cST (105 SUS) and 49°C (120°F)	
Typical application pressure (all ports)	350 bar (5000 psi)
Cartridge fatigue pressure (infinite life)	350 bar (5000 psi)
Rated flow	114 L/min (30 USgpm)
Internal leakage	210 cc/min (13in³/min) @ 350 bar (5000 psi)
Temperature range	-40° to 120°C (-40° to 248°F)
Pilot pressures	**80** - 5,5 bar (80 psi) **120** - 8,3 bar (120 psi)
Pilot displacement volume	1,97 cm³ (0.12 in³)
Cavity	C-I2-4
Fluids	All general purpose hydraulic fluids such as: MIL-H-5606, SAE 10, SAE 20, etc.
Filtration	Cleanliness code 18/**16/13**
Standard housing materials	Aluminum or Steel
Weight cartridge only	0.32 kg (0.70 lbs)
Seal kit	02-160979 (Buna-N), 02-160980 (Viton®)

Viton is a registered trademark of E.I. DuPont

Pressure drop curves

Cartridge only

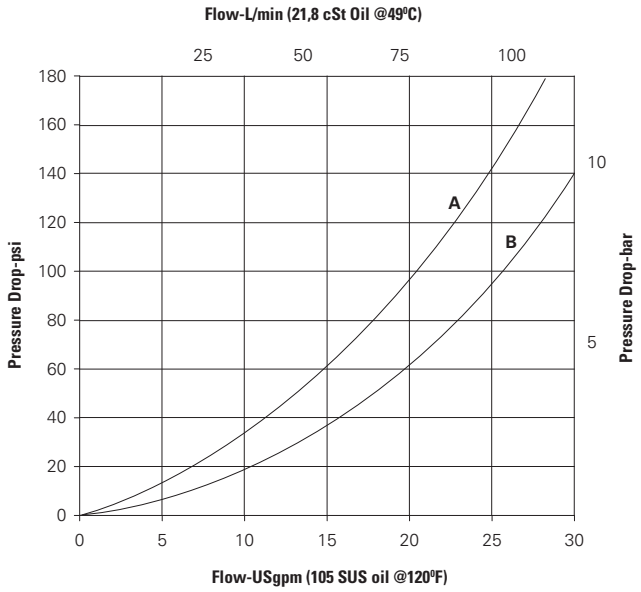

A - P3 to P2

B - P3 to P4

Where measurements are critical request certified drawings. We reserve the right to change specifications without notice.

PTS14-12 - Pilot to shift valve

Pilot operated, directional control valve
114 L/min (30 USgpm) • 350 bar (5000 psi)

Model code

PTS14 – 12 – (V) – ** – *** – 00**

1 2 3 4 5 6

1 Function

PTS14 - Pilot to shift valve

2 Size

12 - 12 size

3 Seals

Blank - Buna-N
V - Viton®

4 Port size

0 - Cartridge only

Code	Port size	Housing number	
		Aluminium fatigue rated	Steel
A4G	1/2" BSPP	5986431-001	
A6G	3/4" BSPP	5986432-001	
A8H	SAE 8	5986433-001	
A10H	SAE 10	5986434-001	
A12H	SAE 12	5986436-001	
A6G	3/4" BSPP		5991073-001
S10H	SAE 10		5991074-001
S12H	SAE 12		5991074-001

See section J for housing details.

5 Pilot to shift (nominal)

80 - 5,5 bar (80 psi)
120 - 8,3 bar (120 psi)

6 Special features

00 - None
(Only required if valve has special features, omitted if "00")

D

Dimensions

mm (inch)

Torque cartridge in aluminum housing 81-95 Nm (60-70 ft. lbs)

Torque cartridge in steel housing 102-115.6 Nm (75-85 ft. lbs)

Cartridge only

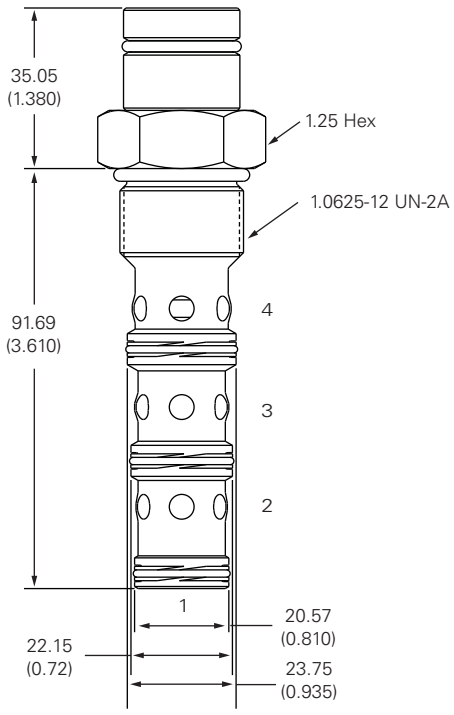

Installation drawing (steel)

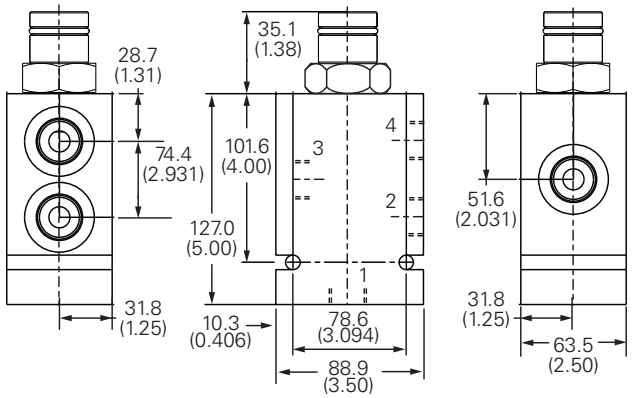

⚠ Warning

Aluminum housings can be used for pressures up to 210 bar (3000 psi). Steel housings must be used for operating pressures above 210 bar (3000 psi).

Where measurements are critical request certified drawings. We reserve the right to change specifications without notice.

PTS14-16 - Pilot to shift valve

Pilot operated, directional control valve
132 L/min (35 USgpm) • 350 bar (5000 psi)

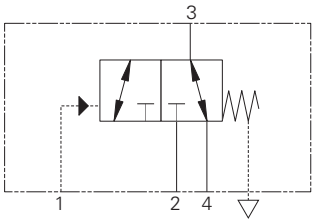

Operation

This valve allows flow between ports 3 and 4 while blocking port 2 until sufficient pressure has been applied to port 1 and the spring bias is overcome.

At this time, flow is directed between port 2 and port 3 while blocking port 4. During the cross-over transition, all ports are blocked. The spring chamber for this valve is externally vented to atmosphere.

Features

Hardened, ground and honed sleeve and spool for low internal leakage. Working pressure 350 bar.

Sectional view

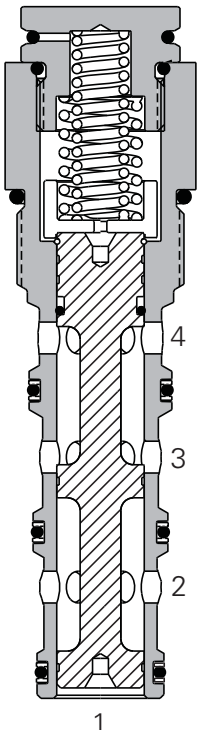

Description

This is a 3-way 2 position, high pressure pilot operated, directional control valve ideal for selecting a function when the pilot pressure is applied or removed.

Performance data

Ratings and specifications

Performance data is typical with fluid at 21,8 cST (105 SUS) and 49°C (120°F)	
Typical application pressure (all ports)	350 bar (5000 psi)
Cartridge fatigue pressure (infinite life)	350 bar (5000 psi)
Rated flow	132 L/min (35 USgpm)
Internal leakage	210 cc/min (13in³/min) @ 350 bar (5000 psi)
Temperature range	-40° to 120°C (-40° to 248°F)
Pilot pressures	**80** - 5,5 bar (80 psi) **160** - 11,0 bar (160 psi)
Pilot displacement volume	1,97 cm³ (0.12 in³)
Cavity	C-I6-4
Fluids	All general purpose hydraulic fluids such as: MIL-H-5606, SAE 10, SAE 20, etc.
Filtration	Cleanliness code 18/**16/13**
Standard housing materials	Aluminum or Steel
Weight cartridge only	0,5 kg (1.12 lbs)
Seal kit	889634 (Buna-N), 889638 (Viton®)

Viton is a registered trademark of E.I. DuPont.

Pressure drop curves

Cartridge only

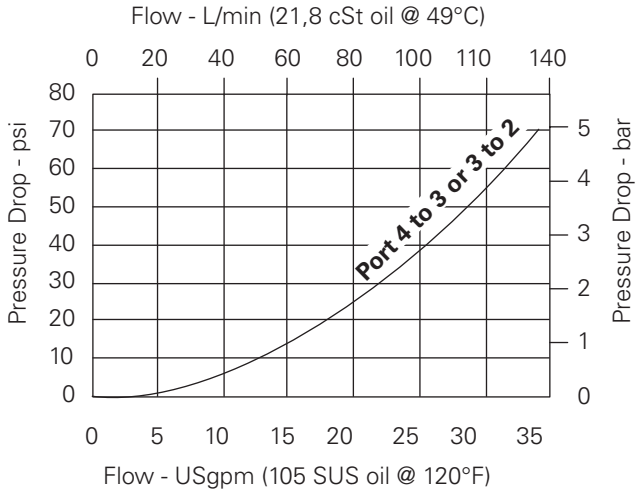

Where measurements are critical request certified drawings. We reserve the right to change specifications without notice.

PTS14-16 - Pilot to Shift Valve

Pilot operated, directional control valve
132 L/min (35 USgpm) • 350 bar (5000 psi)

Model code

PTS14 – 16 (V) –** – *** – 00**

1 2 3 4 5 6

1 Function

PTS14 - Pilot to shift valve

2 Size

16 - 16 Size

3 Seals

Blank - Buna-N
V - Viton®

4 Port size

0 - Cartridge only

Code	Port size	Housing number		
		Aluminum light duty	Aluminium fatigue rated	Steel
A12T	SAE 12	566411		
A6B	3/4" BSPP	02-175468		
A10H	SAE 10		876729	
A12H	SAE 12		876731	
A4G	1/2" BSPP		876728	
A6G	3/4" BSPP		876730	
S4G	1/2" BSPP			02-175143
S6G	3/4" BSPP			02-175144
S10T	SAE 10			02-175141
S12T	SAE 12			02-175142

See section J for housing details.

5 Pilot to shift (nominal)

80 - 5,5 bar (80 psi)
160- 11,0 bar (160 psi)

6 Special features

00 - None
(Only required if valve has special features, omitted if "00")

D

Dimensions

mm (inch)

Torque cartridge in aluminum housing 108-122 Nm (80-90 ft. lbs)

Torque cartridge in steel housing 136-149.6 Nm (100-110 ft. lbs)

Cartridge only

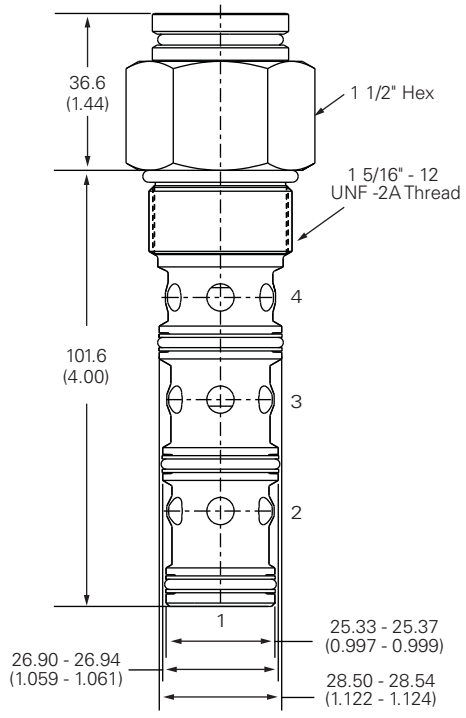

Installation drawing (steel)

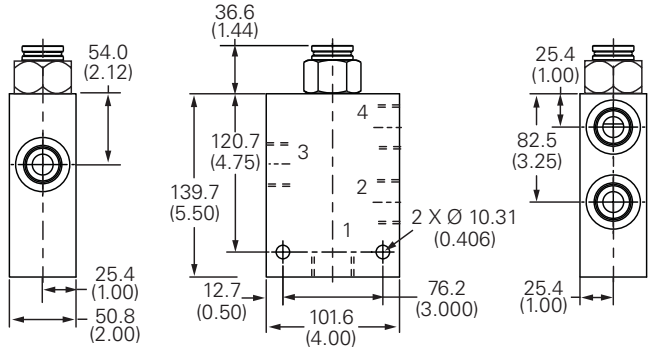

⚠ Warning

Aluminum housings can be used for pressures up to 210 bar (3000 psi). Steel housings must be used for operating pressures above 210 bar (3000 psi).

Where measurements are critical request certified drawings. We reserve the right to change specifications without notice.

PTS5-10 - Pilot to shift valve

Pilot operated, directional control valve
11 L/min (3 USgpm) • 210 bar (3000 psi)

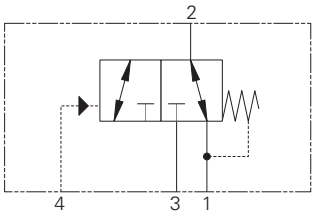

Operation

This valve allows flow between ports 1 and 2 while blocking port 3 until sufficient pressure has been applied to port 4 and the spring bias is overcome.

At this time, flow is directed between port 2 and port 3 while blocking port 1. During the cross-over transition, all ports are blocked. The spring chamber for this valve is vented to port 1.

Features

Hardened, ground and honed sleeve and spool for low internal leakage.

Sectional view

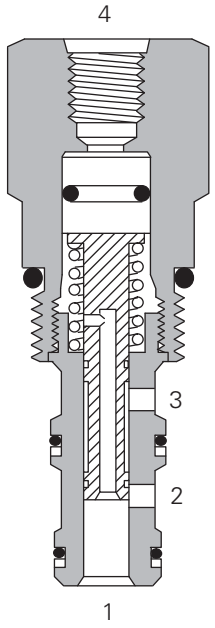

Performance data

Ratings and specifications

Performance data is typical with fluid at 21,8 cST (105 SUS) and 49°C (120°F)	
Typical application pressure (all ports)	210 bar (3000 psi)
Cartridge fatigue pressure (infinite life)	210 bar (3000 psi)
Rated flow	11 L/min (3 USgpm)
Internal leakage	164 cc/min (10 in^3/min) maximum @ 210 bar (3000 psi)
Temperature range	-40° to 120°C (-40° to 248°F)
Pilot pressure	3,45 bar (50 psi))
Pilot displacement volume	0,49 cm^3 (0.02 in^3)
Cavity	C-10-3
Fluids	All general purpose hydraulic fluids such as: MIL-H-5606, SAE 10, SAE 20, etc.
Filtration	Cleanliness code 18/**16/13**
Standard housing materials	Aluminum
Weight cartridge only	0,14 kg (0.32 lbs)
Seal kit	889624 (Buna-N), 889628 (Viton®)

Viton is a registered trademark of E.I. DuPont.

Description

This is a 3-way 2 position, remotely pilot operated directional control valve ideal for selecting a function when the pilot pressure is applied or lost.

Pressure drop curves

Cartridge only

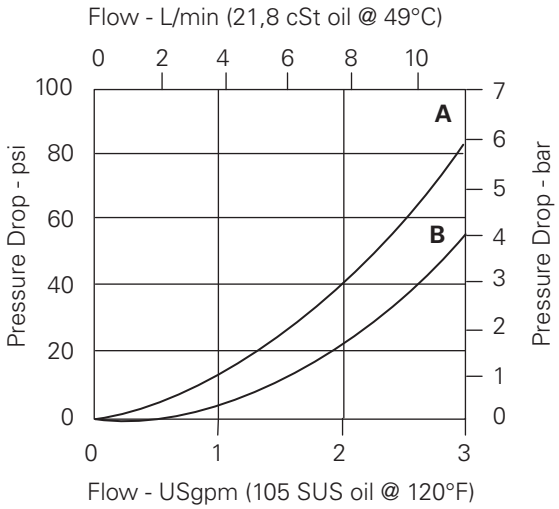

A - Port 3 to 2
B - Port 2 to 1

Where measurements are critical request certified drawings. We reserve the right to change specifications without notice.

PTS5-10 - Pilot to shift valve

Pilot operated, directional control valve
11 L/min (3 USgpm) • 210 bar (3000 psi)

Model code

PTS5 – 10 (V) – ** – ** – 00

1 2 3 4 5 6

1 Function

PTS5 - Pilot to shift valve

2 Size

10 - 10 size

3 Seal material

Blank - Buna-N
V - Viton®

4 Port size

Code	Port size	Housing number	
		Aluminum light duty	Aluminum fatigue rated
0	Cartridge only		
3B	3/8" BSPP	02-173358	
6T	SAE 6	566162	
2G	1/4" BSPP	–	876705
3G	3/8" BSPP	–	876714
6H	SAE 6	–	876704
8H	SAE 8	–	876711

See section J for housing details.

5 Pilot to shift (nominal)

50 - 3,45 bar (50 psi)

6 Special features

00 - None
(Only required if valve has special features, omitted if "00".)

D

Dimensions

mm (inch)

Torque cartridge in aluminum housing
47-54 Nm (35-40 ft lbs)

Cartridge only

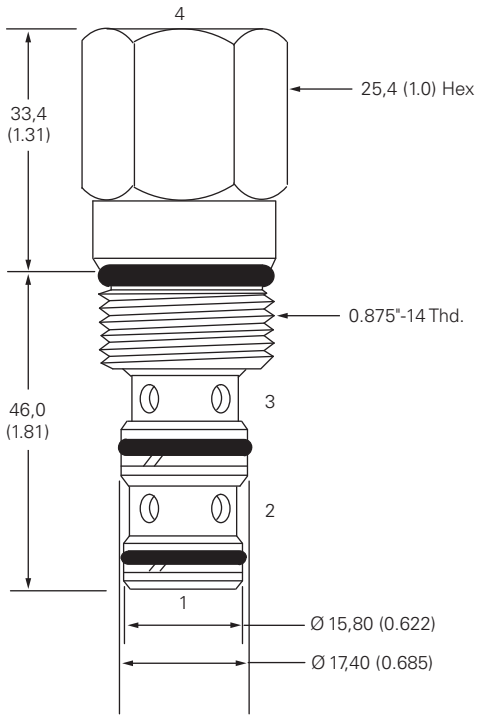

Installation drawing

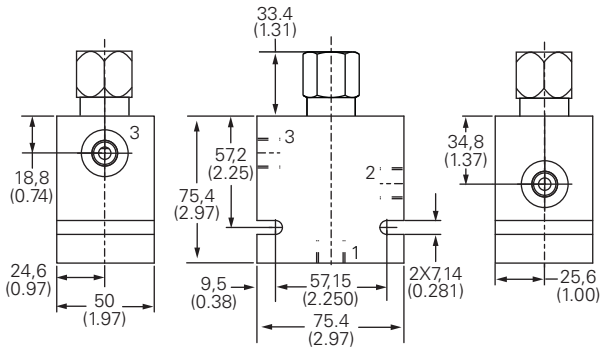

Where measurements are critical request certified drawings. We reserve the right to change specifications without notice.

PTS15-12 - Pilot to shift valve

Pilot operated, directional control valve
105 L/min (27.7 USgpm) • 350 bar (5000 psi)

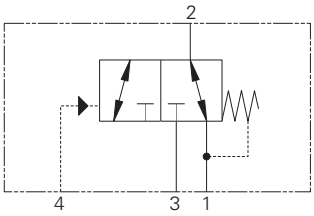

Operation

This valve allows flow between ports 1 and 2 while blocking port 3 until sufficient pressure has been applied to port 4 and the spring bias is overcome.

At this time, flow is directed between port 2 and port 3 while blocking port 1. During the cross-over transition, all ports are blocked. The spring chamber for this valve is vented to port 1.

Features

Hardened, ground and honed sleeve and spool for low internal leakage. Working pressure 350 bar.

Sectional view

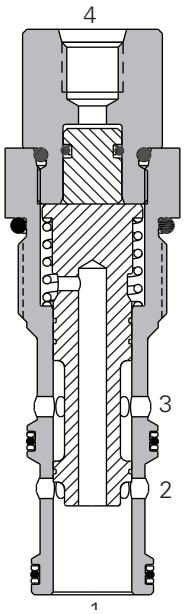

Performance data

Ratings and specifications

Performance data is typical with fluid at 21,8 cST (105 SUS) and 49°C (120°F)	
Typical application pressure (all ports)	350 bar (5000 psi)
Cartridge fatigue pressure (infinite life)	350 bar (5000 psi)
Rated flow	105 L/min (28 USgpm)
Internal leakage	210 cc/min (13 in^3/min) maximum @ 350 bar (5000 psi)
Temperature range	-40° to 120°C (-40° to 248°F)
Pilot pressures	2.76 bar (40 psi)
Pilot displacement volume	0,49 cm^3 (0.02 in^3)
Cavity	C-12-3
Fluids	All general purpose hydraulic fluids such as: MIL-H-5606, SAE 10, SAE 20 etc.
Filtration	Cleanliness code 18/**16/13**
Standard housing material	Aluminum, Steel
Weight cartridge only	0,21 kg (0.55 lbs)
Seal kit	9900171 (Buna-N), 9900172 (Viton®)

Viton is a registered trademark of E.I. DuPont

Description

This is a 3-way 2 position, high pressure, remotely pilot operated directional control valve ideal for selecting a function when the pilot pressure is applied or lost.

Pressure drop curves

Cartridge only

A - Port 3 to 2
B - Port 2 to 1

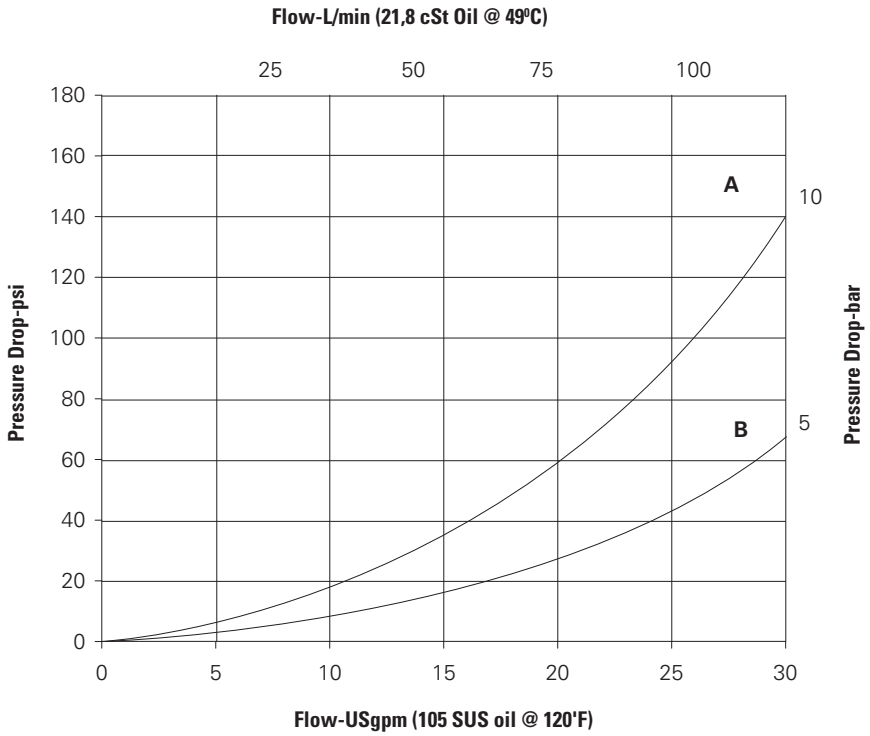

Where measurements are critical request certified drawings. We reserve the right to change specifications without notice.

PTS15-12 - Pilot to Shift Valve

Pilot operated, directional control valve
105 L/min (27.7 USgpm) • 350 bar (5000 psi)

Model code

PTS15 – 12 – (V) – ** – ** – 00

1 2 3 4 5 6

1 Function

PTS15 - Pilot to shift valve

2 Size

12 - 12 size

3 Seal material

Blank - Buna-N
V - Viton®

4 Port size

Code	Port size	Housing number	
		Aluminum	Steel
0	Cartridge		
A4G	1/2" BSPP	02-161817	
A6G	3/4" BSPP	02-161816	
A10H	SAE 10	02-160642	
A12H	SAE 12	02-160646	
S8G	1/2" BSPP		02-169814
S10T	SAE 10		02-161070
S12T	SAE 12		02-169816

See section J for housing details.

5 Pilot to shift (nominal)

40 - 2,76 bar (40 psi)

6 Special features

00 - None
(Only required if valve has special features, omitted if "00".)

D

Dimensions

mm (inch)

Torque cartridge in aluminum housing
81-93 Nm (60-70 ft lbs)

Torque cartridge in steel housing
102-115 Nm (75-85 ft lbs)

Cartridge only

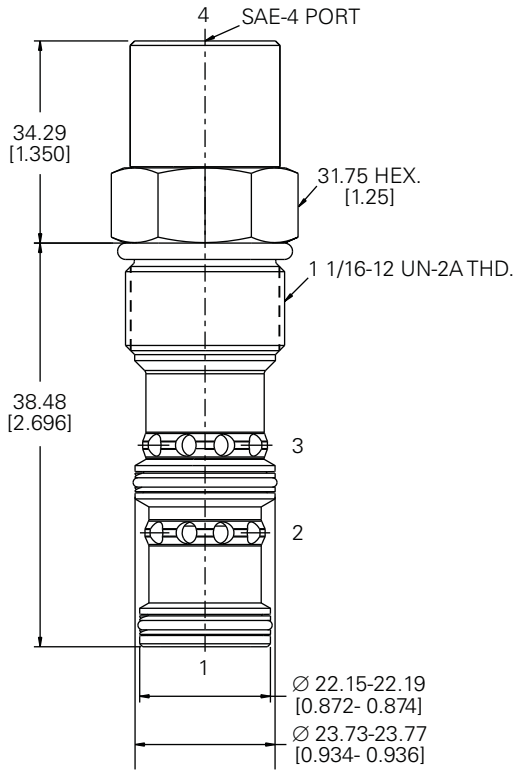

Installation drawing (steel)

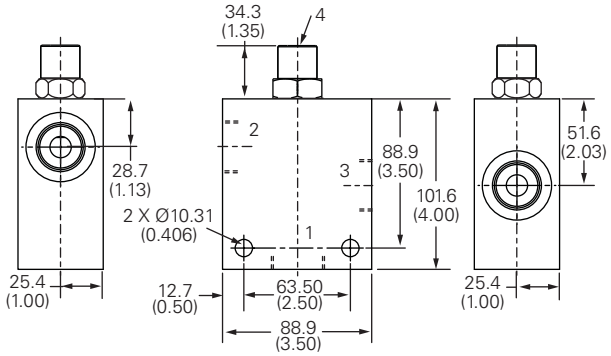

⚠ Warning

Aluminum housings can be used for pressures up to 210 bar (3000 psi). Steel housings must be used for operating pressures above 210 bar (3000 psi).

Where measurements are critical request certified drawings. We reserve the right to change specifications without notice.

PTS5-16 - Pilot to shift valve

Pilot operated, directional control valve
132 L/min (35 USgpm) • 210 bar (3000 psi)

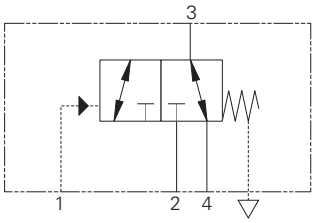

Operation

This valve allows flow between ports 3 and 4 while blocking port 2 until sufficient pressure has been applied to port 1 and the spring bias is overcome.

At this time, flow is directed between port 2 and port 3 while blocking port 4. During the cross-over transition, all ports are open. The spring chamber for this valve is externally vented to atmosphere.

Features

Hardened, ground and honed sleeve and spool for low internal leakage.

Sectional view

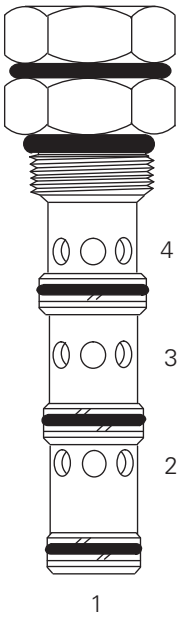

Performance data

Ratings and specifications

Performance data is typical with fluid at 21,8 cST (105 SUS) and 49°C (120°F)	
Typical application pressure (all ports)	210 bar (3000 psi)
Cartridge fatigue pressure (infinite life)	210 bar (3000 psi)
Rated flow	132 L/min (35 USgpm)
Internal leakage	164 cc/min (10 in^3/min) maximum @ 210 bar (3000 psi)
Temperature range	-40° to 120°C (-40° to 248°F)
Pilot pressures	**40** - 2,75 bar (40 psi) **80** - 5,5 bar (80 psi) **160** - 11,0 bar (160 psi)
Pilot displacement volume	1,97 cm^3 (0.12 in^3)
Cavity	C-16-4
Fluids	All general purpose hydraulic fluids such as: MIL-H-5606, SAE 10, SAE 20, etc.
Filtration	Cleanliness code 18/**16/13**
Standard housing materials	Aluminum
Weight cartridge only	0,5 kg (1.12 lbs)
Seal kit	889634 (Buna-N), 889638 (Viton®)

Viton is a registered trademark of E.I. DuPont.

Description

This is a 3-way 2 position, pilot operated directional control valve ideal for selecting a function when the pilot pressure is applied or removed.

Pressure drop curves

Cartridge only

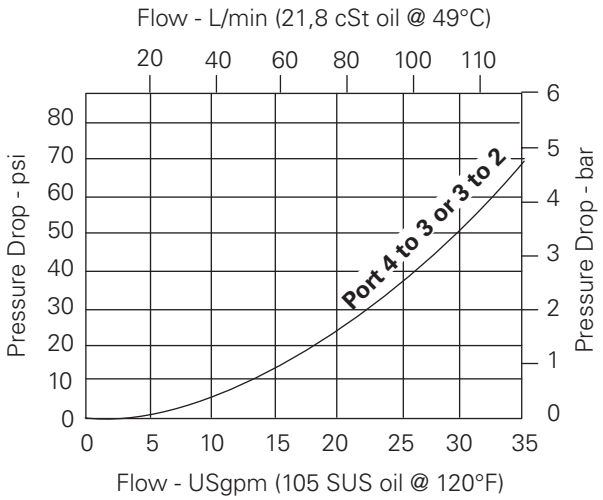

Where measurements are critical request certified drawings. We reserve the right to change specifications without notice.

PTS5-16 - Pilot to shift valve

Pilot operated, directional control valve
132 L/min (35 USgpm) • 210 bar (3000 psi)

Model code

PTS5 – 16 (V) – ** – *** – 00**

1 2 3 4 5 6

1 Function

PTS5 - Pilot to shift valve

2 Size

16 - 16 size

3 Seal material

Blank - Buna-N
V - Viton®

4 Port size

Code	Port size	Housing number		
		Aluminum light duty	Aluminum fatigue rated	Steel
0	Cartridge			
A12T	SAE 12	566411	–	–
A6B	3/4" BSPP	02-175468	–	–
A10H	SAE 10	–	876729	–
A12H	SAE 12	–	876731	–
A4G	1/2" BSPP	–	876728	–
A6G	3/4" BSPP	–	876730	–

See section J for housing details.

5 Pilot to shift (nominal)

40 - 2,75 bar (40 psi)
80 - 5,5 bar (80 psi)
160 - 11,0 bar (160 psi)

6 Special features

00 - None
(Only required if valve has special features, omitted if "00".)

D

Dimensions

mm (inch)

Torque cartridge in aluminum housing 108-122 Nm (80-90 ft. lbs)

Cartridge only

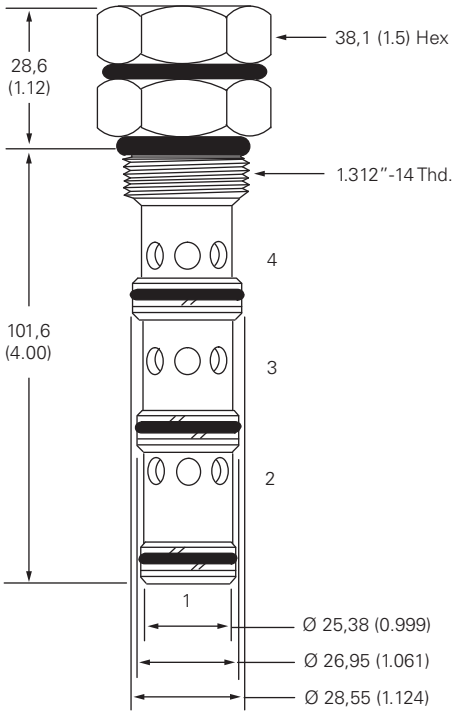

Installation drawing

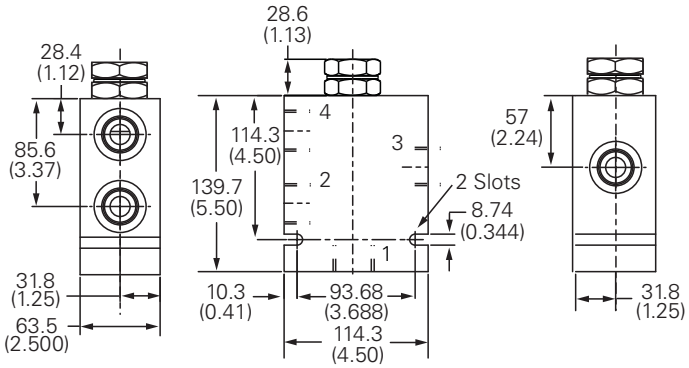

Where measurements are critical request certified drawings. We reserve the right to change specifications without notice.

PTS15-16 - Pilot to shift valve

Pilot operated, directional control valve
132 L/min (35 USgpm) • 350 bar (5000 psi)

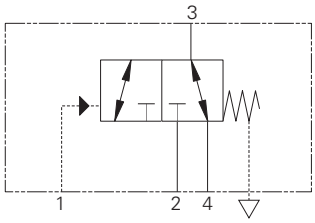

Operation

This valve allows flow between ports 3 and 4 while blocking port 2 until sufficient pressure has been applied to port 1 and the spring bias is overcome.

At this time, flow is directed between port 2 and port 3 while blocking port 4. During the cross-over transition, all ports are open. The spring chamber for this valve is externally vented to atmosphere.

Features

Hardened, ground and honed sleeve and spool for low internal leakage. Working pressure 350 bar.

Sectional view

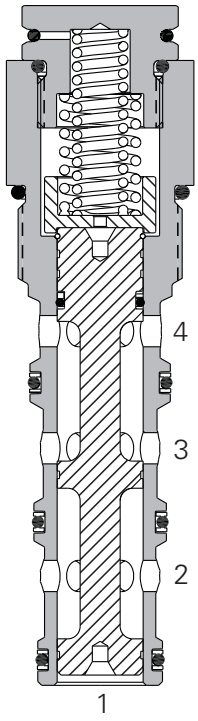

Description

This is a 3-way 2 position, high pressure pilot operated, directional control valve ideal for selecting a function when the pilot pressure is applied or removed.

Performance data

Ratings and specifications

Performance data is typical with fluid at 21,8 cST (105 SUS) and 49°C (120°F)	
Typical application pressure (all ports)	350 bar (5000 psi)
Cartridge fatigue pressure (infinite life)	350 bar (5000 psi)
Rated flow	132 L/min (35 USgpm)
Internal leakage	210 cc/min (13in³/min) @ 350 bar (5000 psi)
Temperature range	-40° to 120°C (-40° to 248°F)
Pilot pressures	**80** - 5,5 bar (80 psi) **160** - 11,0 bar (160 psi)
Pilot displacement volume	1,97 cm³ (0.12 in³)
Cavity	C-16-4
Fluids	All general purpose hydraulic fluids such as: MIL-H-5606, SAE 10, SAE 20, etc.
Filtration	Cleanliness code 18/**16/13**
Standard housing materials	Aluminum or Steel
Weight cartridge only	0.5 kg (1.12 lbs)
Seal kit	889634 (Buna-N), 889638 (Viton®)

Viton is a registered trademark of E.I. DuPont.

Pressure drop curves

Cartridge only

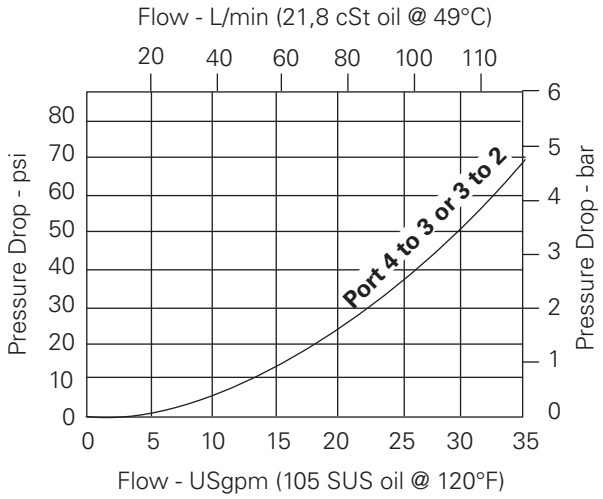

Where measurements are critical request certified drawings. We reserve the right to change specifications without notice.

PTS15-16 - Pilot to shift valve

Pilot operated, directional control valve
132 L/min (35 USgpm) • 350 bar (5000 psi)

Model code

PTS15 – 16 – (V) – ** – *** – 00**

1 2 3 4 5 6

1 Function

PTS15 - Pilot to shift valve

2 Size

16 - 16 Size

3 Seals

Blank - Buna-N

4 Port size

0 - Cartridge only

Code	Port size	Housing number		
		Aluminum light duty	Aluminum fatigue rated	Steel
A12T	SAE 12	566411		
A6B	3/4" BSPP	02-175468		
A10H	SAE 10		876729	
A12H	SAE 12		876731	
A4G	1/2" BSPP		876728	
A6G	3/4" BSPP		876730	
S4G	1/2" BSPP			02-175143
S6G	3/4" BSPP			02-175144
S10T	SAE 10			02-175141
S12T	SAE 12			02-175142

See section J for housing details.

5 Pilot to shift (nominal)

40 - 2,76 bar (40 psi)
80 - 5,5 bar (80 psi)
160 - 11,0 bar (160 psi)

6 Special features

00 - None
(Only required if valve has special features, omitted if "00")

D

Dimensions

mm (inch)

Torque cartridge in aluminum housing 108-122 Nm (80-90 ft. lbs)

Torque cartridge in steel housing 136-149.6 Nm (100-110 ft. lbs)

Cartridge only

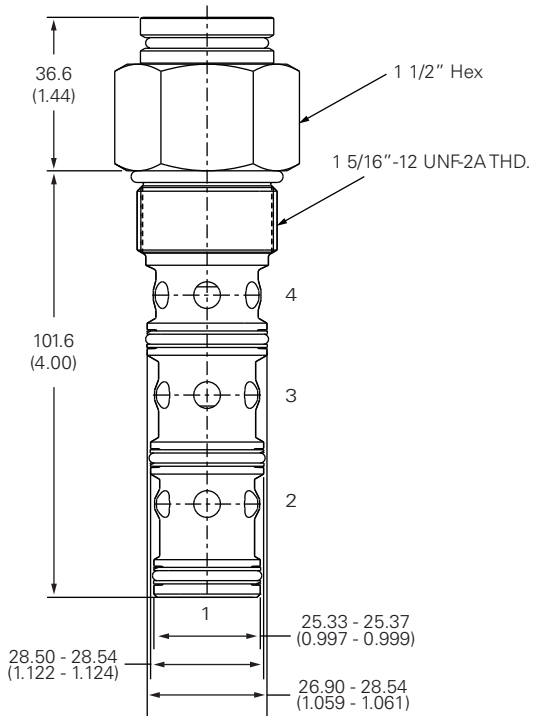

Installation drawing (steel)

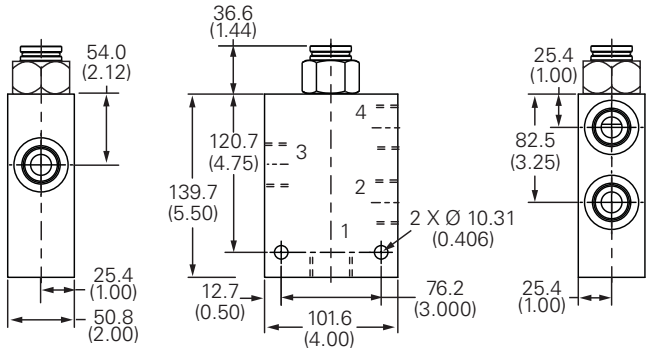

⚠ Warning

Aluminum housings can be used for pressures up to 210 bar (3000 psi). Steel housings must be used for operating pressures above 210 bar (3000 psi).

Where measurements are critical request certified drawings. We reserve the right to change specifications without notice.

PTS6-16 - Pilot to shift valve

Pilot operated, directional control valve
132 L/min (35 USgpm) • 210 bar (3000 psi)

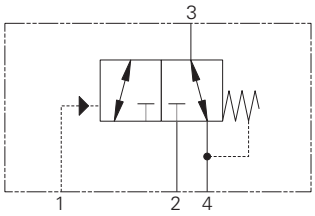

Operation

This valve allows flow between ports 3 and 4 while blocking port 2 until sufficient pressure has been applied to port 1 and the spring bias is overcome.

At this time, flow is directed between port 2 and port 3 while blocking port 4. During the cross-over transition, all ports are open. The spring chamber for this valve is vented to port 4.

Features

Hardened, ground and honed sleeve and spool for low internal leakage.

Sectional view

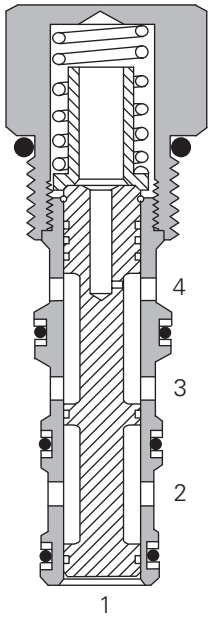

Description

This is a 3-way 2 position, pilot operated directional control valve ideal for selecting a function when the pilot pressure is applied or removed.

Performance data

Ratings and specifications

Performance data is typical with fluid at 21,8 cST (105 SUS) and 49°C (120°F)	
Typical application pressure (all ports)	210 bar (3000 psi)
Cartridge fatigue pressure (infinite life)	210 bar (3000 psi)
Rated flow	132 L/min (35 USgpm)
Internal leakage	164 cc/min (10 in^3/min) maximum @ 210 bar (3000 psi)
Temperature range	-40° to 120°C (-40° to 248°F)
Pilot pressures	**40** - 2,75 bar (40 psi) **80** - 5,5 bar (80 psi) **160** - 11,0 bar (160 psi)
Pilot displacement volume	1,97 cm^3 (0.12 in^3)
Cavity	C-16-4
Fluids	All general purpose hydraulic fluids such as: MIL-H-5606, SAE 10, SAE 20, etc.
Filtration	Cleanliness code 18/**16/13**
Standard housing materials	Aluminum
Weight cartridge only	0,5 kg (1.12 lbs)
Seal kit	889634 (Buna-N), 889638 (Viton®)

Viton is a registered trademark of E.I. DuPont

Pressure drop curves

Cartridge only

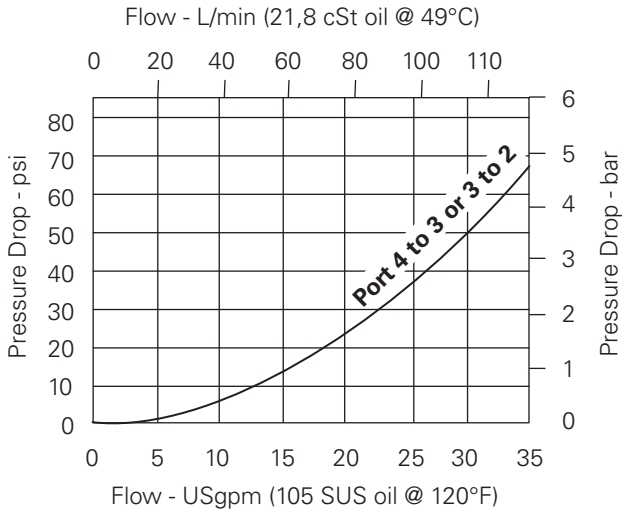

Where measurements are critical request certified drawings. We reserve the right to change specifications without notice.

PTS6-16 - Pilot to shift valve

Pilot operated, directional control valve
132 L/min (35 USgpm) • 210 bar (3000 psi)

Model code

PTS6 – 16 (V) – ** – *** – 00**

1 2 3 4 5 6

1 Function

PTS6 - Pilot to shift valve

2 Size

16 - 16 size

3 Seal material

Blank - Buna-N
V - Viton®

4 Port size

Code	Port size	Housing number		
		Aluminum light duty	Aluminum fatigue rated	Steel
0	Cartridge			
A12T	SAE 12	566411	–	–
A6B	3/4" BSPP	02-175468	–	–
A10H	SAE 10	–	876729	–
A12H	SAE 12	–	876731	–
A4G	1/2" BSPP	–	876728	–
A6G	3/4" BSPP	–	876730	–

See section J for housing details.

5 Pilot to shift (nominal)

40 - 2,75 bar (40 psi)
80 - 5,5 bar (80 psi)
160 - 11,0 bar (160 psi)

6 Special features

00 - None
(Only required if valve has special features, omitted if "00".)

D

Dimensions

mm (inch)

Torque cartridge in aluminum housing
108-122 Nm (80-90 ft lbs)

Cartridge only

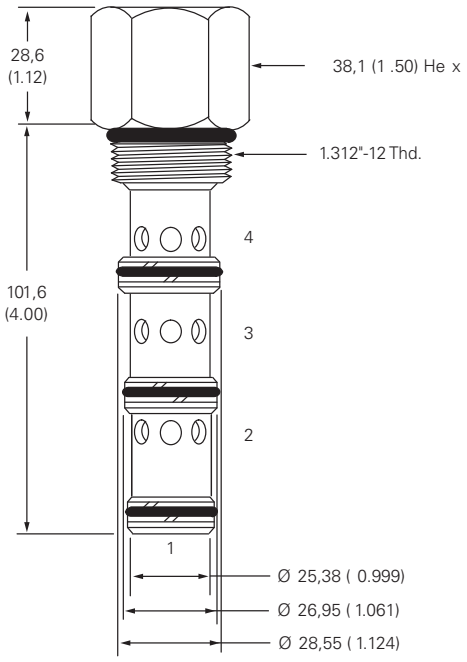

Installation drawing

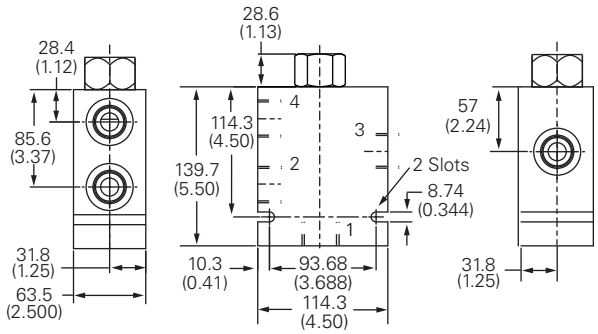

Where measurements are critical request certified drawings. We reserve the right to change specifications without notice.

PTS16-16 - Pilot to shift valve

Pilot operated, directional control valve
132 L/min (35 USgpm) • 350 bar (5000 psi)

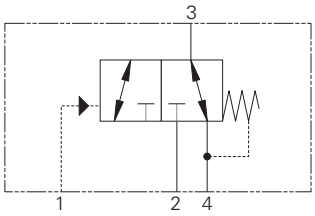

Operation

This valve allows flow between ports 3 and 4 while blocking port 2 until sufficient pressure has been applied to port 1 and the spring bias is overcome.

At this time, flow is directed between port 2 and port 3 while blocking port 4. During the cross-over transition, all ports are open. The spring chamber for this valve is vented to port 4.

Features

Hardened, ground and honed sleeve and spool for low internal leakage. Working pressure 350 bar.

Sectional view

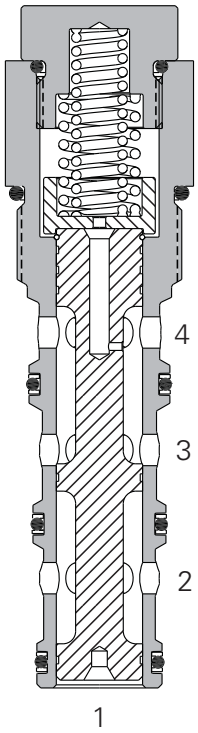

Performance data

Ratings and specifications

Performance data is typical with fluid at 21,8 cST (105 SUS) and 49°C (120°F)	
Typical application pressure (all ports)	350 bar (5000 psi)
Cartridge fatigue pressure (infinite life)	350 bar (5000 psi)
Rated flow	132 L/min (35 USgpm)
Internal leakage	210 cc/min (13in³/min) @ 350 bar (5000 psi)
Temperature range	-40° to 120°C (-40° to 248°F)
Pilot pressures	**80** - 5,5 bar (80 psi) **160** - 11,0 bar (160 psi)
Pilot displacement volume	1,97 cm³ (0.12 in³)
Cavity	C-16-4
Fluids	All general purpose hydraulic fluids such as: MIL-H-5606, SAE 10, SAE 20, etc.
Filtration	Cleanliness code 18/**16/13**
Standard housing materials	Aluminum or Steel
Weight cartridge only	0,5 kg (1.12 lbs)
Seal kit	889634 (Buna-N), 889638 (Viton®)

Viton is a registered trademark of E.I. DuPont.

Description

This is a 3-way 2 position, high pressure pilot operated, directional control valve ideal for selecting a function when the pilot pressure is applied or removed.

Pressure drop curves

Cartridge only

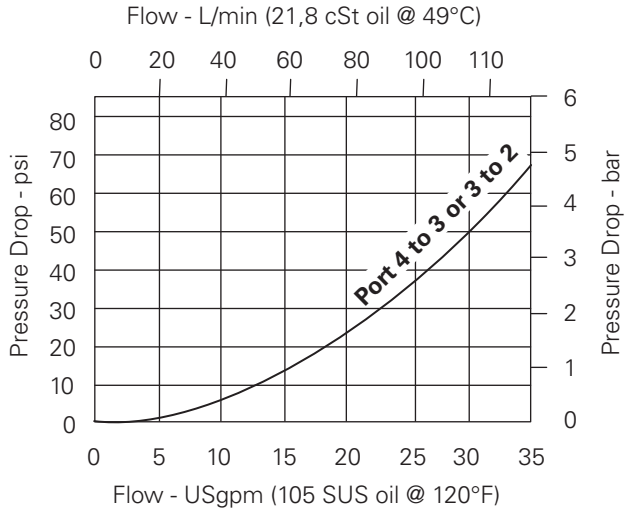

Where measurements are critical request certified drawings. We reserve the right to change specifications without notice.

PTS16-16 - Pilot to shift valve

Pilot operated, directional control valve
132 L/min (35 USgpm) • 350 bar (5000 psi)

Model code

PTS16 – 16 – (V) – * – ** – 00**

1 2 3 4 5 6

1 Function

PTS16 - Pilot to shift valve

2 Size

16 - 16 Size

3 Seals

Blank - Buna-N
V - Viton®

4 Port size

0 - Cartridge only

Code	Port size	Housing number		
		Aluminum light duty	Aluminum fatigue rated	Steel
A12T	SAE 12	566411		
A6B	3/4" BSPP	02-175468		
A10H	SAE 10		876729	
A12H	SAE 12		876731	
A4G	1/2" BSPP		876728	
A6G	3/4" BSPP		876730	
S4G	1/2" BSPP			02-175143
S6G	3/4" BSPP			02-175144
S10T	SAE 10			02-175141
S12T	SAE 12			02-175142

See section J for housing details.

5 Pilot to shift (nominal)

80 - 5,5 bar (80 psi)
160 - 11,0 bar (160 psi)

6 Special features

00 - None
(Only required if valve has special features, omitted if "00")

D

Dimensions

mm (inch)

Torque cartridge in aluminum housing 81-95 Nm (60-70 ft. lbs)

Torque cartridge in steel housing 102-115 Nm (75-85 ft. lbs)

Cartridge only

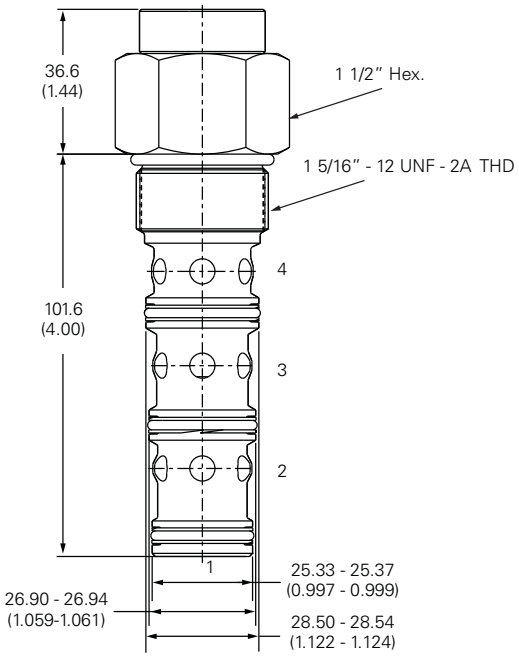

Installation drawing (steel)

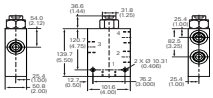

⚠ Warning

Aluminum housings can be used for pressures up to 210 bar (3000 psi). Steel housings must be used for operating pressures above 210 bar (3000 psi).

Where measurements are critical request certified drawings. We reserve the right to change specifications without notice.

PTS9-8 - Pilot to shift valve

Pilot operated, directional control valve
19 L/min (5 USgpm) • 280 bar (4000 psi)

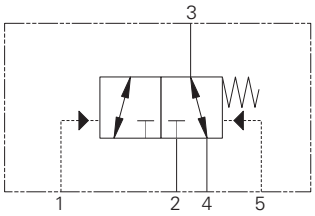

Operation

This valve allows flow between ports 3 and 4 while blocking port 2 until sufficient pressure has been applied to port 1 and the spring bias is overcome.

At that time flow is directed between ports 3 and 2 while blocking port 4. During the cross-over transition, all ports are open. The spring chamber for this valve is vented to port 5.

Features

Hardened, ground and honed sleeve and spool for low internal leakage.

Sectional view

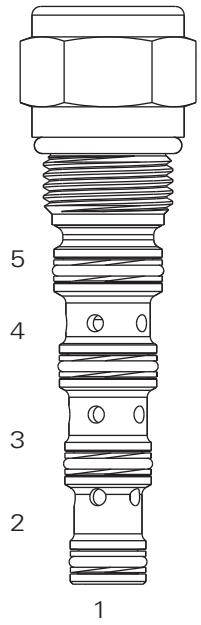

Performance data

Ratings and specifications

Performance data is typical with fluid at 21,8 cST (105 SUS) and 49°C (120°F)	
Typical application pressure (all ports)	280 bar (4000 psi)
Cartridge fatigue pressure (infinite life)	280 bar (4000 psi)
Rated flow	19 L/min (5 USgpm)
Transition	All ports open
Internal leakage, port 2 to port 1	164 cc/min (10 in^3/min) @ 210 bar (3000 psi)
Temperature range	-40° to 120°C (-40° to 248°F)
Cavity	C-8-5S
Fluids	All general purpose hydraulic fluids such as: MIL-H-5606, SAE 10, SAE 20 etc.
Filtration	Cleanliness code 18/**16/13**

Description

This is a 3-way 2 position, pilot operated directional control valve ideal for selecting a function when the pilot pressure is applied or lost or as a pilot operated shuttle valve.

Performance characteristics

Cartridge only

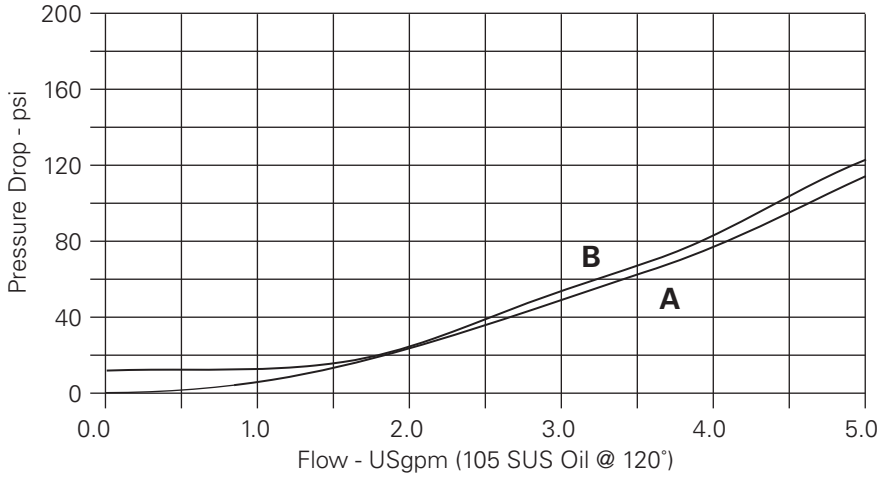

A - Pressure drop port 3 to port 4
B - Pressure drop port 3 to port 2

Where measurements are critical request certified drawings. We reserve the right to change specifications without notice.

PTS9-8 - Pilot to shift valve

Pilot operated, directional control valve
19 L/min (5 USgpm) • 280 bar (4000 psi)

Model code

PTS9 – 8 * – * – 000 – * – 00**

1 2 3 4 5 6 7

1 Function
PTS9 - Pilot to shift valve

2 Size
8 - C-8-5S cavity

3 Seal material
Blank - Buna-N
V - Viton®

4 Body
0 - Cartridge only

5 Port size
000 - Cartridge only

6 Pilot to shift (nominal)
080 - 5,5 bar (80 psi)
160 - 11,0 bar (160 psi)

7 Special features
00 - None
(Only required if valve has special features, omitted if "00".)

D

Dimensions

mm (inch)

Cartridge only

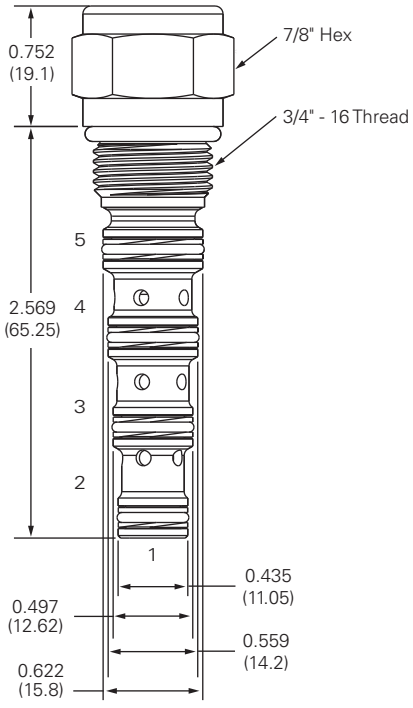

⚠ Warning

Aluminum housings can be used for pressures up to 210 bar (3000 psi). Steel housings must be used for operating pressures above 210 bar (3000 psi).

Where measurements are critical request certified drawings. We reserve the right to change specifications without notice.

PTS9-10 - Pilot to shift valve

Pilot operated, directional control valve
38 L/min (10 USgpm) • 280 bar (4000 psi)

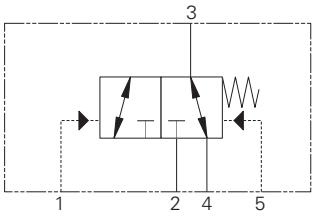

Operation

This valve allows flow between ports 3 and 4 while blocking port 2 until sufficient pressure has been applied to port 1 and the spring bias is overcome.

At that time flow is directed between ports 3 and 2 while blocking port 4. During the cross-over transition, all ports are open. The spring chamber for this valve is vented to port 5.

Features

Hardened, ground and honed sleeve and spool for low internal leakage.

Sectional view

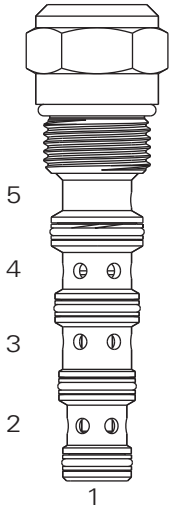

Performance data

Ratings and specifications

Performance data is typical with fluid at 21,8 cST (105 SUS) and 49°C (120°F)	
Typical application pressure (all ports)	280 bar (4000 psi)
Cartridge fatigue pressure (infinite life)	280 bar (4000 psi)
Rated flow	38 L/min (10 USgpm)
Transition	All ports open
Internal leakage, port 2 to port 1	164 cc/min (10 in^3/min) @ 210 bar (3000 psi)
Temperature range	-40° to 120°C (-40° to 248°F)
Cavity	C-10-5S
Fluids	All general purpose hydraulic fluids such as: MIL-H-5606, SAE 10, SAE 20 etc.
Filtration	Cleanliness code 18/**16/13**

Description

This is a 3-way 2 position, pilot operated directional control valve ideal for selecting a function when the pilot pressure is applied or lost or as a pilot operated shuttle valve.

Performance characteristics

Cartridge only

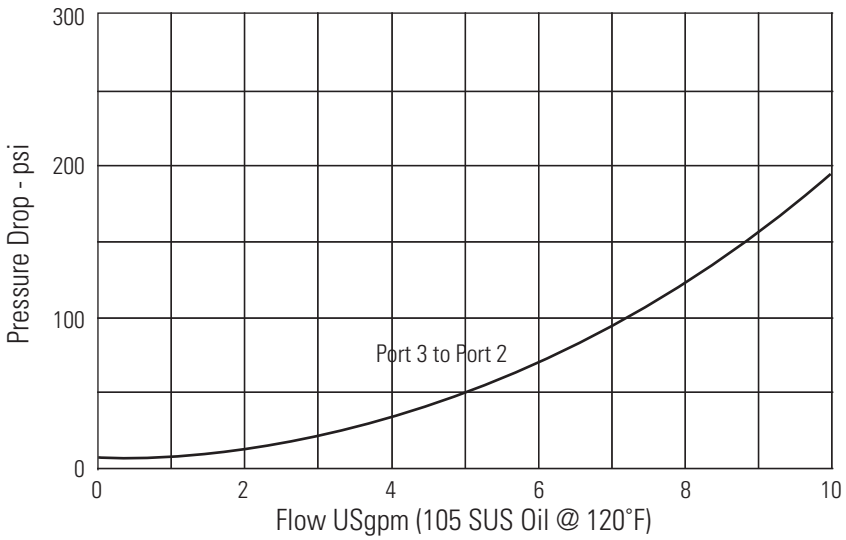

Where measurements are critical request certified drawings. We reserve the right to change specifications without notice.

PTS9-10 - Pilot to Shift Valve

Pilot operated, directional control valve
38 L/min (10 USgpm) • 280 bar (4000 psi)

Model code

PTS9 – 10 * – * – * – *** – 00**

1 2 3 4 5 6 7

1 Function

PTS9 - Pilot to shift valve

2 Size

8 - C-10-5S cavity

3 Seal material

Blank - Buna-N
V -Viton®

4 Body

0 - Cartridge only

5 Port size

000- Cartridge only

Code	Port size		Housing number	
	Port 1, 2 & 4	Port 1 & 5	Aluminum	Steel
6T	SAE 6	SAE 4	5994133-001	5994134-001
8T	SAE 8	SAE 4	5994133-002	5994134-002
4G	1/2" BSPP	1/4" BSPP	5994133-003	5994134-003

See section J for housing details.

6 Shift pressure

80 - 5,5 bar (80 psi)
100 - 6,9 bar (100 psi)
160 - 11,0 bar (160 psi)

7 Special features

00 - None
(Only required if valve has special features, omitted if "00".)

D

Dimensions

mm (inch)

Cartridge only

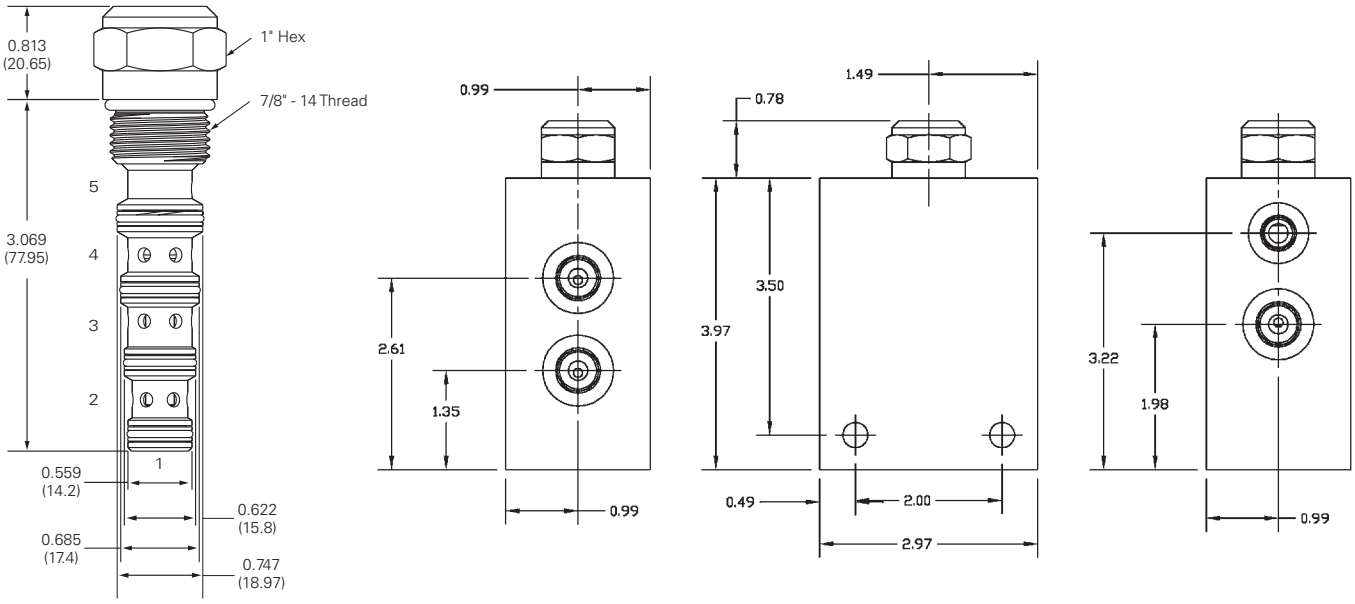

⚠ Warning

Aluminum housings can be used for pressures up to 210 bar (3000 psi). Steel housings must be used for operating pressures above 210 bar (3000 psi).

Where measurements are critical request certified drawings. We reserve the right to change specifications without notice.

PTS9-12 - Pilot to shift valve

Pilot operated, directional control valve
76 L/min (20 USgpm) • 280 bar (4000 psi)

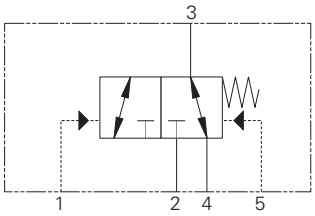

Operation

This valve allows flow between ports 3 and 4 while blocking port 2 until sufficient pressure has been applied to port 1 and the spring bias is overcome.

At that time flow is directed between ports 3 and 2 while blocking port 4. During the cross-over transition, all ports are open. The spring chamber for this valve is vented to port 5.

Features

Hardened, ground and honed sleeve and spool for low internal leakage.

Sectional view

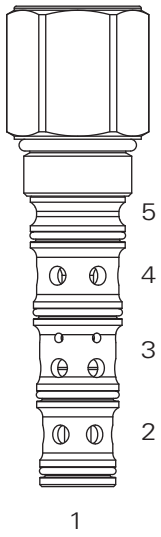

Performance data

Ratings and specifications

Performance data is typical with fluid at 21,8 cST (105 SUS) and 49°C (120°F)	
Typical application pressure (all ports)	280 bar (4000 psi)
Cartridge fatigue pressure (infinite life)	280 bar (4000 psi)
Rated flow	76 L/min (20 USgpm)
Transition	All ports open
Internal leakage, port 2 to port 1	164 cc/min (10 in^3/min) @ 210 bar (3000 psi)
Temperature range	-40° to 120°C (-40° to 248°F)
Cavity	C-12-5S
Fluids	All general purpose hydraulic fluids such as: MIL-H-5606, SAE 10, SAE 20 etc.
Filtration	Cleanliness code 18/**16/13**
Standard housing material	Aluminum or steel
Weight cartridge only	0,36 kg (0.79 lbs)
Seal kit	(Urethane) 202914-921

Description

This is a 3-way 2 position, pilot operated directional control valve ideal for selecting a function when the pilot pressure is applied or lost or as a pilot operated shuttle valve.

Performance characteristics

Cartridge only

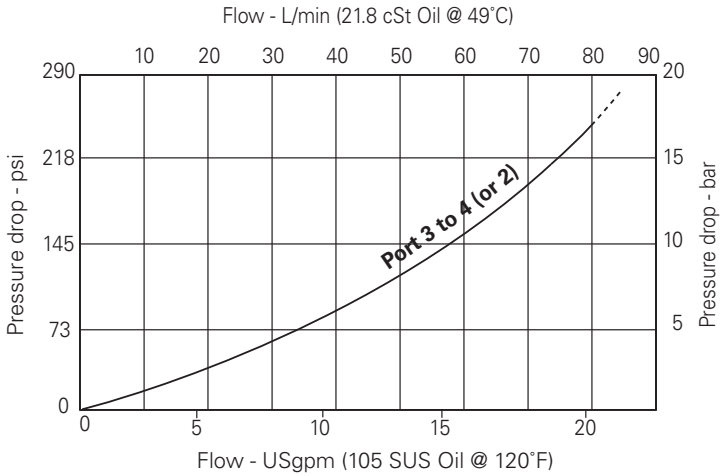

Where measurements are critical request certified drawings. We reserve the right to change specifications without notice.

PTS9-12 - Pilot to shift valve

Pilot operated, directional control valve
76 L/min (20 USgpm) • 280 bar (4000 psi)

Model code

PTS9 – 12 U – * – * – *** – 00**

1 2 3 4 5 6 7

1 Function

PTS9 - Pilot to shift valve

2 Size

8 - C-12-5S cavity

3 Seal material

U - Urethane (standard)

4 Body

0 - Cartridge only
A - Aluminum
S - Steel

5 Port size

Code	Port size		Housing number	
	Port 2, 3 & 4	Port 1 & 5	Aluminum	Steel
000	No Body	–	–	–
12T	SAE 12	SAE 4	4998820-002	4998821-002
06G	3/4" BSPP	1/4" BSPP	4998820-004	4998821-004

See section J for housing details.

6 Shift pressure

075 - 5,2 bar (75 psi)
110 - 7,6 bar (110 psi)

7 Special features

00 - None
(Only required if valve has special features, omitted if "00".)

D

Dimensions

mm (inch)

Torque cartridge in housing:

A - 81-95 Nm (60-70 ft lbs)
S - 102-115 Nm (75-85 ft lbs)

Cartridge only

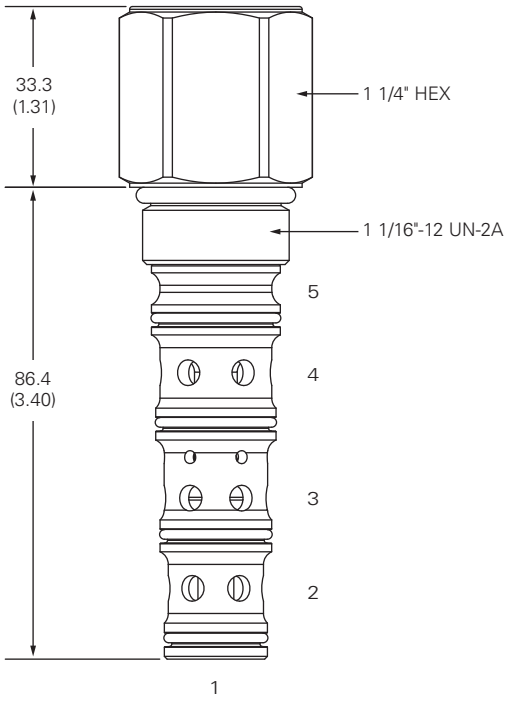

⚠ Warning

Aluminum housings can be used for pressures up to 210 bar (3000 psi). Steel housings must be used for operating pressures above 210 bar (3000 psi).

Where measurements are critical request certified drawings. We reserve the right to change specifications without notice.

PTS9-16 - Pilot to shift valve

Pilot operated, directional control valve
151 L/min (40 USgpm) • 280 bar (4000 psi)

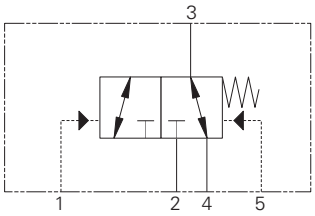

Operation

This valve allows flow between ports 3 and 4 while blocking port 2 until sufficient pressure has been applied to port 1 and the spring bias is overcome.

At that time flow is directed between ports 3 and 2 while blocking port 4. During the cross-over transition, all ports are open. The spring chamber for this valve is vented to port 5.

Features

Hardened, ground and honed sleeve and spool for low internal leakage.

Sectional view

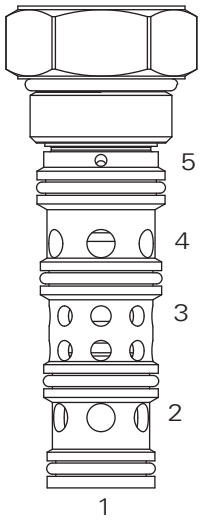

Performance data

Ratings and specifications

Performance data is typical with fluid at 21,8 cST (105 SUS) and 49°C (120°F)	
Typical application pressure (all ports)	280 bar (4000 psi)
Cartridge fatigue pressure (infinite life)	280 bar (4000 psi)
Rated flow	151 L/min (40 gpm)
Transition	All ports open
Internal leakage, port 2 to port 1	164 cc/min (10 in^3/min) @ 210 bar (3000 psi)
Temperature range	-40° to 120°C (-40° to 248°F)
Cavity	C-16-5S
Fluids	All general purpose hydraulic fluids such as: MIL-H-5606, SAE 10, SAE 20 etc.
Filtration	Cleanliness code 18/**16/13**
Standard housing material	Aluminum or steel
Weight cartridge only	0,47 kg (1.05 lbs)
Seal kit	(Urethane) 202915-922

Description

This is a 3-way 2 position, pilot operated directional control valve ideal for selecting a function when the pilot pressure is applied or lost or as a pilot operated shuttle valve.

Performance characteristics

Cartridge only

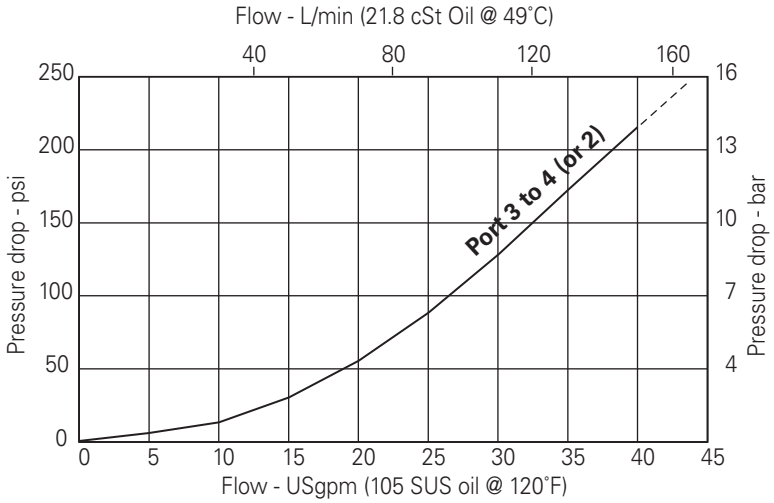

Where measurements are critical request certified drawings. We reserve the right to change specifications without notice.

PTS9-16 - Pilot to shift valve

Pilot operated, directional control valve
151 L/min (40 USgpm) • 280 bar (4000 psi)

Model code

PTS9 – 16 U – * – * – *** – 00**

1 2 3 4 5 6 7

1 Function

PTS9 - Pilot to shift valve

2 Size

16 - C-16-5S cavity

3 Seal material

U - Urethane (standard)

4 Body

0 - Cartrige only
A - Aluminum
S - Steel

5 Port size

Code	Port size		Housing number	
	Port 2, 3 & 4	Port 1 & 5	Aluminum	Steel
000	No Body	–	–	–
16T	SAE 16	SAE 4	4994880-002	4994881-002
08G	1" BSPP	1/4" BSPP	4994880-004	4994881-004

See section J for housing details.

6 Shift pressure

030 - 2 bar (30 psi)
050 - 3,5 bar (50 psi)
070 - 4,8 bar (70 psi)

7 Special features

00 - None
(Only required if valve has special features, omitted if "00".)

D

Dimensions

mm (inch)

Torque cartridge in housing:

A - 108-122 Nm (80-90 ft lbs)
S - 136-149 Nm (100-110 ft lbs)

Cartridge only

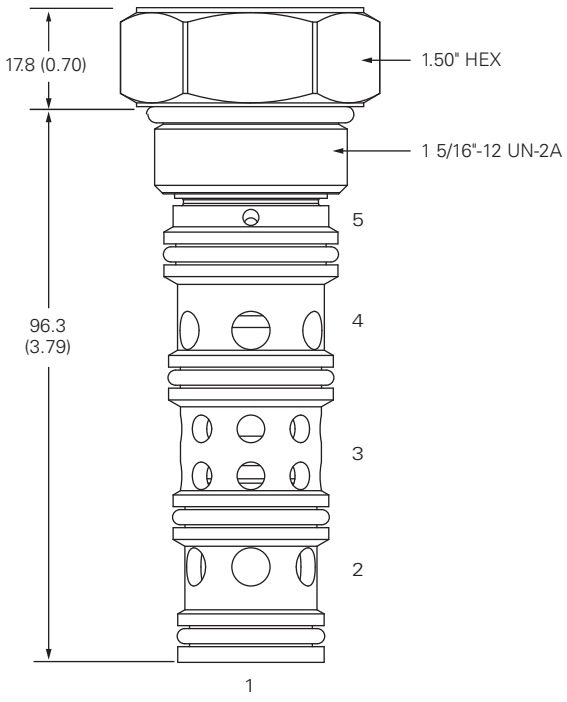

⚠ Warning

Aluminum housings can be used for pressures up to 210 bar (3000 psi). Steel housings must be used for operating pressures above 210 bar (3000 psi).

Where measurements are critical request certified drawings. We reserve the right to change specifications without notice.

PTS9-20 - Pilot to shift valve

Pilot operated, directional control valve
230 L/min (60 USgpm) • 280 bar (4000 psi)

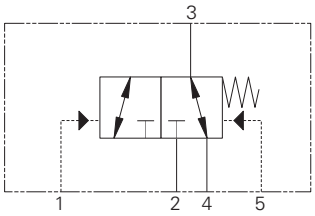

Operation

This valve allows flow between ports 3 and 4 while blocking port 2 until sufficient pressure has been applied to port 1 and the spring bias is overcome.

At that time flow is directed between ports 3 and 2 while blocking port 4. During the cross-over transition, all ports are open. The spring chamber for this valve is vented to port 5.

Features

Hardened, ground and honed sleeve and spool for low internal leakage.

Sectional view

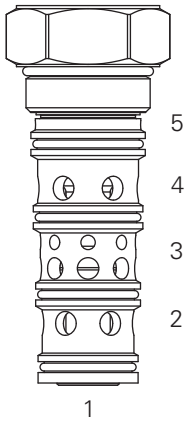

Performance data

Ratings and specifications

Performance data is typical with fluid at 21,8 cST (105 SUS) and 49°C (120°F)	
Typical application pressure (all ports)	280 bar (4000 psi)
Cartridge fatigue pressure (infinite life)	280 bar (4000 psi)
Rated flow	230 L/min (60 USgpm)
Transition	All ports open
Internal leakage, port 2 to port 1	164 cc/min (10 in^3/min) @ 210 bar (3000 psi)
Temperature range	-40° to 120°C (-40° to 248°F)
Cavity	C-20-5S
Fluids	All general purpose hydraulic fluids such as: MIL-H-5606, SAE 10, SAE 20 etc.
Filtration	Cleanliness code 18/**16/13**
Standard housing material	Aluminum or Steel
Weight cartridge only	0,86 kg (1.9 lbs)
Seal kit	(Urethane) 02-187543

Description

This is a 3-way 2 position, pilot operated directional control valve ideal for selecting a function when the pilot pressure is applied or lost or as a pilot operated shuttle valve.

Performance characteristics

Cartridge only

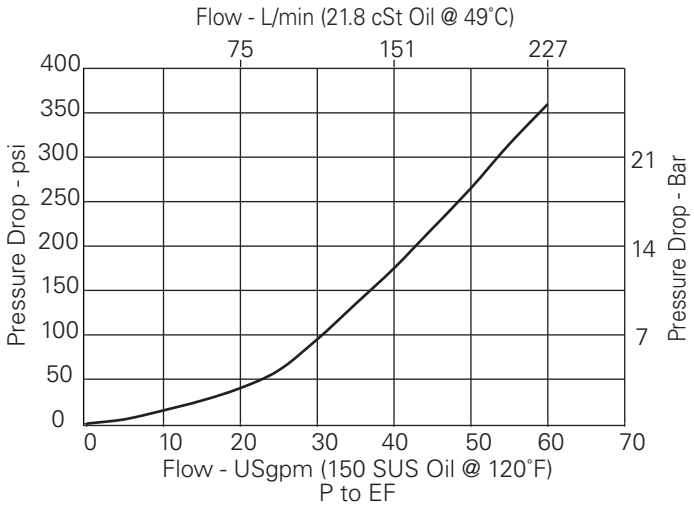

Where measurements are critical request certified drawings. We reserve the right to change specifications without notice.

PTS9-20 Pilot to shift valve

Pilot operated, directional control valve
230 L/min (60 USgpm) • 280 bar (4000 psi)

Model code

PTS9 – 20 U – * – * – *** – 00**

1 2 3 4 5 6 7

1 Function

PTS9 - Pilot to shift valve

2 Size

20 - C-20-5S cavity

3 Seal material

U - Urethane (standard)

4 Body

O - Cartridge only
A - Aluminum
S - Steel

5 Port size

Code	Port size		Housing number	
	Port 2, 3 & 4	Port 1 & 5	Aluminum	Steel
000	No Body	–	–	–
16T	SAE 16	SAE 4	4998822-002	4998823-002
08G	1" BSPP	1/4" BSPP	4998822-004	4998823-004

See section J for housing details.

6 Shift pressure

40 - 2,75 bar (40 psi)
80 - 5,5 bar (80 psi)

7 Special features

00 - None
(Only required if valve has special features, omitted if "00".)

D

Dimensions

mm (inch)

Torque cartridge in housing:

Note: A - 108-122 Nm
(80-90 ft lbs)
S - 136-149 Nm (100-110 ft lbs)

Cartridge only

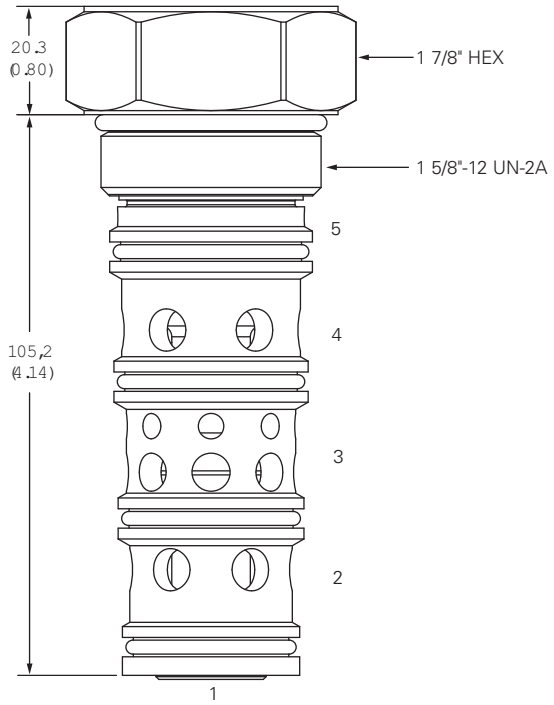

⚠ Warning

Aluminum housings can be used for pressures up to 210 bar (3000 psi). Steel housings **must** be used for operating pressures **above** 210 bar (3000 psi).

Where measurements are critical request certified drawings. We reserve the right to change specifications without notice.

DSV4-10 - Shuttle valve

Spring centered, open or closed center spool type shuttle valve
26 L/min (6.9 USgpm) • 350 bar (5000 psi)

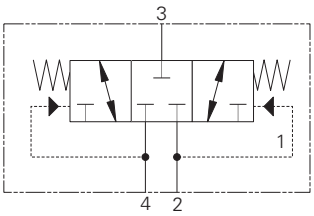

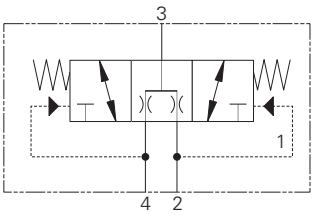

Operation

When the spring bias is overcome at port 2, the flow is directed from port 4 to port 3 while closing port 2.

When the spring bias is overcome at port 4, the flow is directed form port 2 to port 3 while closing port 4. This valve is available in both a closed and open center spool configuration.

Features

Hardened, ground and honed working parts to limit leakage and prolong life. The valve should be fitted into a blind C-10-4 cavity or a standard body with port 1 plugged. Several switching pressures available. Compact design with a low Pressure drop.

D

Sectional view

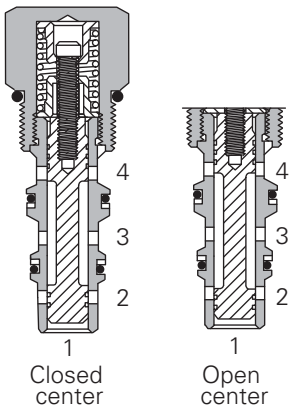

Performance data

Ratings and specifications

Performance data is typical with fluid at 21,8 cST (105 SUS) and 49°C (120°F)	
Typical application pressure (all ports)	350 bar (5000 psi)
Cartridge fatigue pressure (infinite life)	350 bar (5000 psi)
Rated flow	26 L/min (6.9 USgpm)
Internal leakage	164 cc/min (10 in^3 /min) maximum @ 210 bar (3000 psi)
Pilot pressures	40 - 2,75 bar (40 psi) 80 - 5,5 bar (80 psi) 160 - 11,0 bar (160 psi)
Pilot displacement volume	0,49 cm^3 (0.02 in^3)
Temperature range	-40° to 120°C (-40° to 248°F)
Cavity	C-10-4
Fluids	All general purpose hydraulic fluids such as: MIL-H-5606, SAE 10, SAE 20 etc.
Filtration	Cleanliness code 18/**16/13**
Standard housing materials	Aluminum or steel
Weight cartridge only	0,14 kg (0.32 lbs)
Seal kit	889597 (Buna-N), 02-172397 (Viton®)

Viton is a registered trademark of E.I. DuPont.

Description

This is a 3-way 3-position, Spring centered, open or closed center spool type hot oil shuttle valve for transmission applications. This is usually built into manifolds containing other transmission components such as cross line relief valves and purge reliefs.

Pressure drop curves

Cartridge only

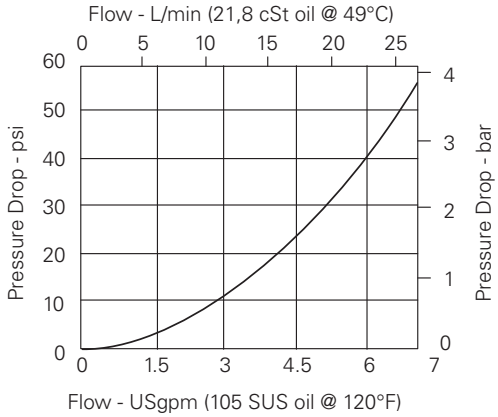

Typical application

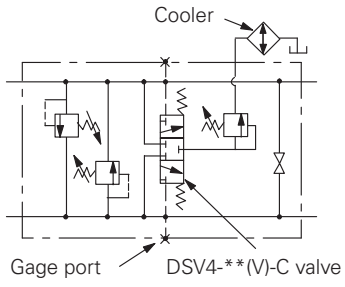

Where measurements are critical request certified drawings. We reserve the right to change specifications without notice.

DSV4-10 - Shuttle valve

Spring centered, open or closed center spool type shuttle valve
26 L/min (6.9 USgpm) • 350 bar (5000 psi)

Model code

DSV4 – 10 (V) – * – 0 – * – 00**

1 2 3 4 5 6 7

1 Function

DSV4 - Directional shuttle valve

2 Size

10 - 10 size

3 Seal material

Blank - Buna-N
V - Viton®

4 Spool configuration

C - Normally closed
O - Open center

5 Port size

0 - Cartridge only (Not available with standard housing)

6 Pilot to shift (nominal)

Note: Code based on pressure in psi.
40 - 2,75 bar (40 psi)
80 - 5,5 bar (80 psi)
160 -11,0 bar (160 psi)

7 Special features

00 - None
(Only required if valve has special features, omitted if "00.")

Dimensions
mm (inch)

Torque cartridge in housing
A - 47-54 Nm (35-40 ft. lbs)
S - 68-75 Nm (50-55 ft. lbs)

Cartridge only

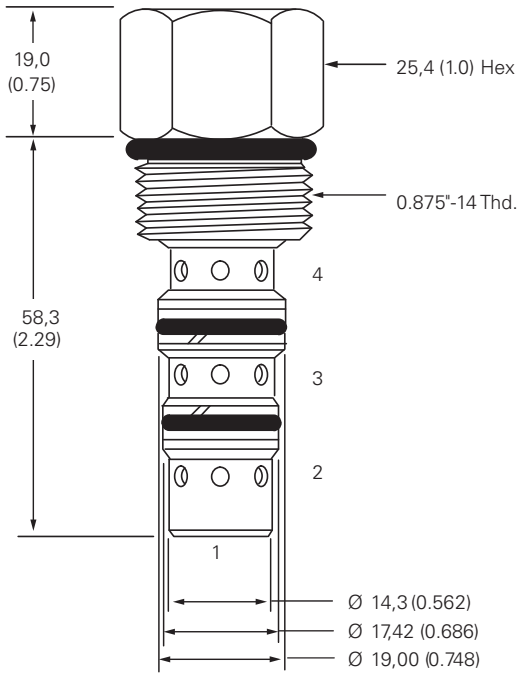

⚠ Warning

Aluminum housings can be used for pressures up to 210 bar (3000 psi). Steel housings must be used for operating pressures above 210 bar (3000 psi).

Where measurements are critical request certified drawings. We reserve the right to change specifications without notice.

DSV4-12 - Shuttle valve

Spring centered, open or closed center spool type shuttle valve
113 L/min (29.9 USgpm) • 350 bar (5000 psi)

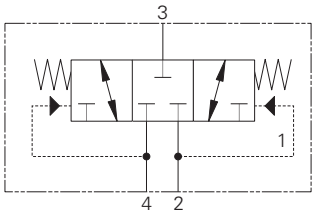

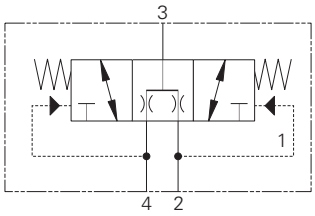

D

Sectional view

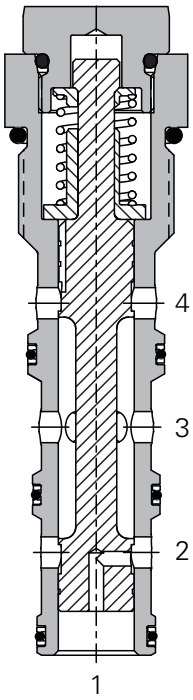

Description

This is a 3-way 3-position, Spring centered, open or closed center spool type hot oil shuttle valve for transmission applications. This is usually built into manifolds containing other transmission components such as cross line relief valves and purge reliefs.

Operation

When the spring bias is overcome at port 2, the flow is directed from port 4 to port 3 while closing port 2.

When the spring bias is overcome at port 4, the flow is directed form port 2 to port 3 while closing port 4. This valve is available in both a closed and open center spool configuration.

Features

Hardened, ground and honed working parts to limit leakage and prolong life. The valve should be fitted into a blind C-12-4 cavity or a standard body with port 1 plugged. Several switching pressures available. Compact design with a low Pressure drop.

Performance data

Ratings and specifications

Performance data is typical with fluid at 21,8 cST (105 SUS) and 49°C (120°F)	
Typical application pressure (all ports)	350 bar (5000 psi)
Cartridge fatigue pressure (infinite life)	350 bar (5000 psi)
Rated flow	113 L/min (29.9 USgpm)
Temperature range	-40° to 120°C (-40° to 248°F)
Cavity	C-12-4
Fluids	All general purpose hydraulic fluids such as: MIL-H-5606, SAE 10, SAE 20 etc.
Filtration	Cleanliness code 18/**16/13**
Standard housing materials	Aluminum
Seal kit	(Buna-N), Viton®

Endurance tested to 1 million cycles at full rated flow and pressure.
Viton is a registered trademark of E.I. DuPont.

Where measurements are critical request certified drawings. We reserve the right to change specifications without notice.

DSV4-12 - Shuttle valve

Spring centered, open or closed center spool type shuttle valve
113 L/min (29.9 USgpm) • 350 bar (5000 psi)

Model code

DSV4 – 12 (V) – * – * – * – 00**

1 2 3 4 5 6 7

1 Function

DSV4 - Directional shuttle valve

2 Size

12 - 12 size

3 Seal material

Blank - Buna-N
V - Viton®

4 Spool configuration

C - Normally closed
O - Open center

5 Port size

Code	Port size	Housing number
		Aluminium
A4G	3/8" BSPP	02-173358
A6G	SAE 6	566162
AIOH	3/8" BSPP	876714
AI2H	SAE 6	876704

See section J for housing details.

6 Pilot to shift (nominal)

Note: Code based on pressure in psi.

40 - 2,75 bar (40 psi)
80 - 5,5 bar (80 psi)
160 -11,0 bar (160 psi)

7 Special features

00 - None
(Only required if valve has special features, omitted if "00.")

D

Dimensions

mm (inch)

Cartridge only

Torque cartridge in housing
A - 47-54 Nm (35-40 ft. lbs)
S - 68-75 Nm (50-55 ft. lbs)

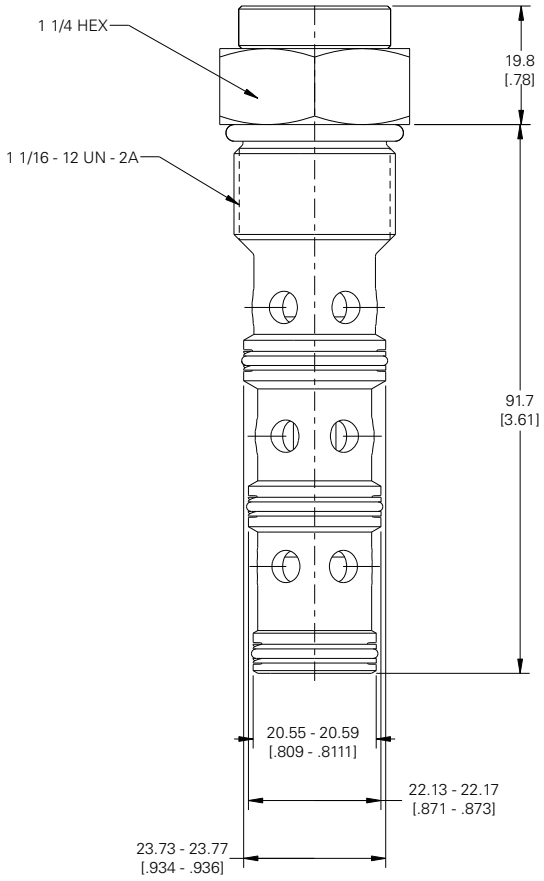

⚠ Warning

Aluminum housings can be used for pressures up to 210 bar (3000 psi). Steel housings must be used for operating pressures above 210 bar (3000 psi).

Where measurements are critical request certified drawings. We reserve the right to change specifications without notice.

DSV4-16 - Shuttle valve

Spring centered, open or closed center spool type shuttle valve
190 L/min (50 USgpm) • 350 bar (5000 psi)

Functional symbols

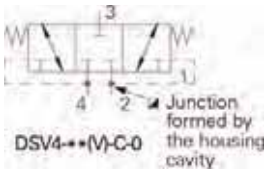

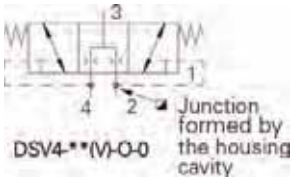

Description

The DSV4-16 is a 3-way, 3 position, spring centered, open or closed center spool, transmission shuttle, screw-in cartridge valve. Usually built into a customized housing along with other transmission components, see "Functional Symbols." The valve should be installed in a Blind C-10-4 cavity or in a standard housing with port 1 plugged.

Operation

When the spring bias is overcome at port 2, the flow is directed from port 4 to port 3 while closing port 2. When the spring bias is overcome at port 4, the flow is directed form port 2 to port 3 while closing port 4. This valve is available in both a closed and open center spool configuration.

Performance data

Ratings and specifications

Performance data is typical with fluid at 21,8 cST (105 SUS) and 49°C (120°F)	
Typical application pressure (all ports)	350 bar (5000 psi)
Cartridge fatigue pressure (infinite life)	350 bar (5000 psi)
Rated flow	190 L/min (50 USgpm)
Internal leakage	164 cc/min (10 in^3 /min) maximum @ 210 bar (3000 psi)
Temperature range	-40° to 120°C (-40° to 248°F)
Pilot pressures	**40** - 2,75 bar (40 psi) **80** - 5,5 bar (80 psi) **160** - 11,0 bar (160 psi)
Cavity	C-16-4
Fluids	All general purpose hydraulic fluids such as: MIL-H-5606, SAE 10, SAE 20, etc.
Filtration	Cleanliness code 18/**16/13**
Standard housing materials	Aluminum or steel
Weight cartridge only	0,5 kg (1.12 lbs)
Seal kit	889634 (Buna-N) 889634 (Viton®)

Viton is a registered trademark of E.I. DuPont.

Profile Views

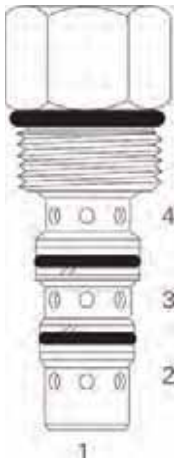

Typical application

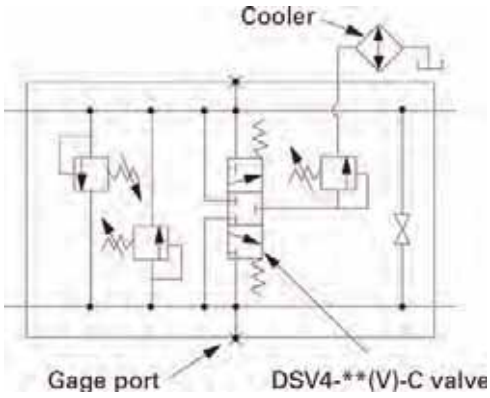

Pressure drop curve

Cartridge only

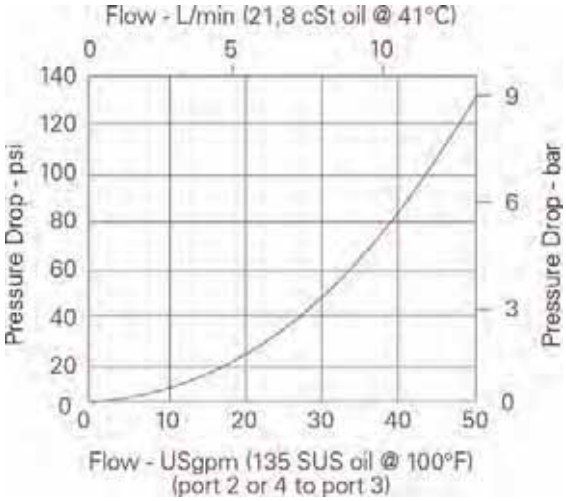

Where measurements are critical request certified drawings. We reserve the right to change specifications without notice.

DSV4-16 - Shuttle valve

Spring centered, open or closed center spool type shuttle valve
190 L/min (50 USgpm) • 350 bar (5000 psi)

DSV4 – 16 (V) – * – 0 – * – 00**

1 2 3 4 5 6 7

1 Function

DSV4 - Directional shuttle valve

2 Size

16 - 16 size

3 Seal

Blank - Buna-N
V - Viton®

4 Spool configuration

C - Closed center
O - Open center

5 Port size

O - Cartridge only (Not available with standard housing)

6 Pilot to shift (nominal)

40 - 2,75 bar (40 psi)
80 - 5,5 bar (80 psi)
160 -11,0 bar (160 psi)

7 Special features

00 - None
(Only required if valve has special features, omitted if "00.")

D

Dimensions

mm (inch)

Torque cartridge in housing
A - 108-122 Nm (80-90 ft. lbs)
S - 136-149 Nm (100-110 ft. lbs)

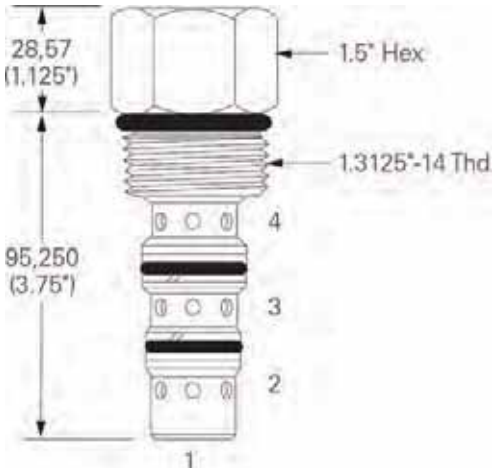

⚠ Warning

Aluminum housings can be used for pressures up to 210 bar (3000 psi). Steel housings **must** be used for operating pressures **above** 210 bar (3000 psi).

Where measurements are critical request certified drawings. We reserve the right to change specifications without notice.

PTS6-10 - Pilot to shift valve

Remote pilot operated, directional control valve
23 L/min (6 USgpm) • 210 bar (3000 psi)

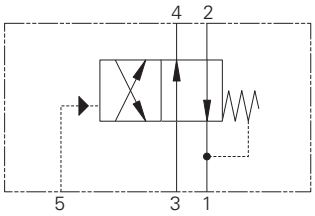

Operation

This valve allows flow between ports 1 and 2 and ports 3 and 4 until sufficient pressure has been applied at port 5 and the spring bias is overcome.

At that time, flow is directed between ports 1 and 4 and ports 3 and 2. During the cross-over transition, all ports are blocked. The spring chamber for this valve is vented internally to port 1.

Features

Hardened, ground and honed sleeve and spool for low internal leakage.

Sectional view

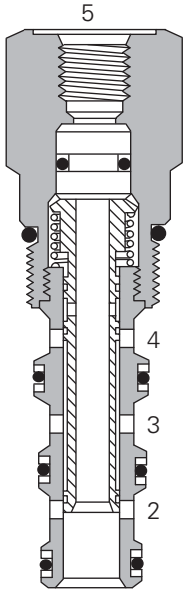

Description

This is a 4-way 2 position, remotely pilot operated directional control valve ideal for reversing a function when the pilot pressure is applied or lost.

Performance data

Ratings and specifications

Performance data is typical with fluid at 21,8 cST (105 SUS) and 49°C (120°F)	
Typical application pressure (all ports)	210 bar (3000 psi)
Cartridge fatigue pressure (infinite life)	210 bar (3000 psi)
Rated flow	23 L/min (6 USgpm)
Internal leakage	164 cc/min (10 in^3/min) maximum @ 210 bar (3000 psi)
Temperature range	-40° to 120°C (-40° to 248°F)
Pilot pressure	4,2 bar (60 psi)
Pilot displacement volume	0,49 cm^3 (0.02 in^3)
Cavity	C-10-4
Fluids	All general purpose hydraulic fluids such as: MIL-H-5606, SAE 10, SAE 20, etc.
Filtration	Cleanliness code 18/**16/13**
Standard housing materials	Aluminum
Weight cartridge only	0,15 kg (0.33 lbs)
Seal kit	889625 (Buna-N), 566080 (Viton®)

Viton is a registered trademark of E.I. DuPont.

Pressure drop curves

Cartridge only

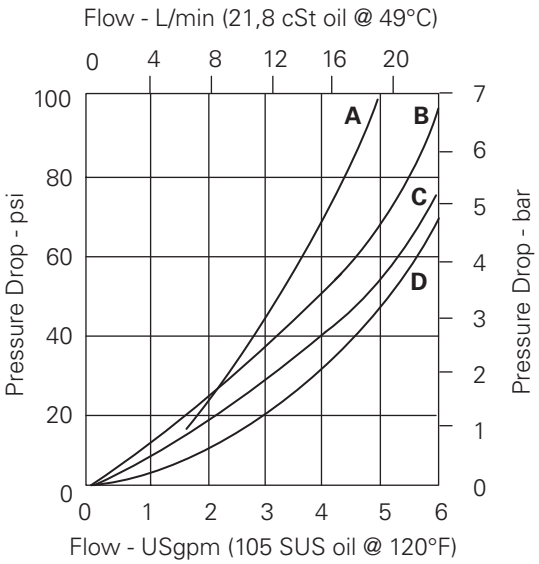

A - Port 3 to 4
B - Port 4 to 1
C - Port 3 to 2
D - Port 2 to 1

Where measurements are critical request certified drawings. We reserve the right to change specifications without notice.

PTS6-10 - Pilot to shift valve

Remote pilot operated, directional control valve
23 L/min (6 USgpm) • 210 bar (3000 psi)

Model code

PTS6 – 10 (V) – * – ** – 00**

1 2 3 4 5 6

1 Function

PTS6 - Pilot to shift valve

2 Size

10 - 10 size

3 Seal material

Blank - Buna-N
V - Viton®

4 Port size

Code	Port size	Housing number	
		Aluminium light duty	Aluminium fatigue rated
0	Cartridge		
A3B	3/8" BSPP	02-179705	–
A6T	SAE 6	566161	–
A2G	1/4" BSPP	–	876709
A3G	3/8" BSPP	–	876715
A6H	SAE 6	–	876708
A8H	SAE 8	–	876713

See section J for housing details.

5 Pilot to shift (nominal)

60 - 4,2 bar (60 psi)

6 Special features

00 - None
(Only required if valve has special features, omitted if "00".)

D

Dimensions
mm (inch)

Torque cartridge in aluminum housing 47-75 Nm (35-40 ft lbs)

Torque cartridge in steel housing 68-75 Nm (50-55 ft lbs)

Cartridge only

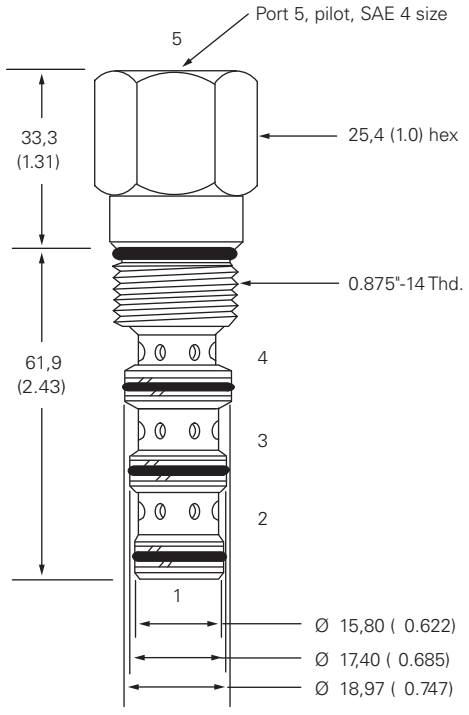

Installation drawing

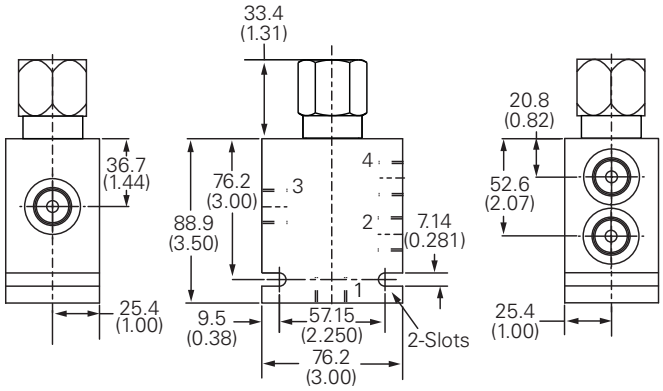

Where measurements are critical request certified drawings. We reserve the right to change specifications without notice.

PTS16-10 - Pilot to shift valve

Remote pilot operated, directional control valve
23 L/min (6 USgpm) • 350 bar (5000 psi)

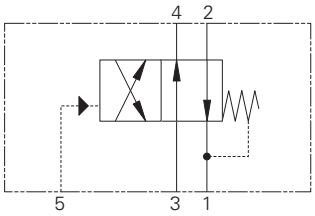

Operation

This valve allows flow between ports 1 and 2 and ports 3 and 4 until sufficient pressure has been applied at port 5 and the spring bias is overcome.

At that time, flow is directed between ports 1 and 4 and ports 3 and 2. During the cross-over transition, all ports are blocked. The spring chamber for this valve is vented internally to port 1.

Features

Hardened, ground and honed sleeve and spool for low internal leakage. Working pressure 350 bar.

Sectional view

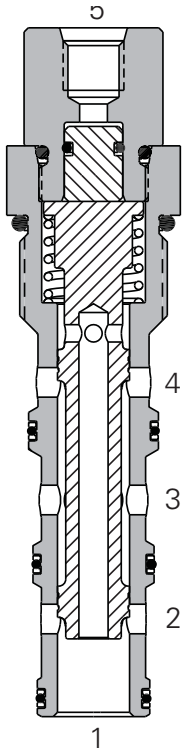

Description

This is a 4-way 2 position, high pressure, remotely pilot operated directional control valve ideal for reversing a function when the pilot pressure is applied or lost.

Performance data

Ratings and specifications

Performance data is typical with fluid at 21,8 cST (105 SUS) and 49°C (120°F)	
Typical application pressure (all ports)	350 bar (5000 psi)
Cartridge fatigue pressure (infinite life)	350 bar (5000 psi)
Rated flow	23 L/min (6 USgpm)
Internal leakage	210 cc/min (13in³/min) @ 350 bar (5000 psi)
Temperature range	-40°to 120°C(-40° to 248°F)
Pilot pressures	4,2 bar (60 psi)
Pilot displacement volume	0,49 cm³ (0.02 in³)
Cavity	C-l0-4
Fluids	All general purpose hydraulic fluids such as: MIL-H-5606, SAE 10, SAE 20, etc.
Filtration	Cleanliness code 18/**16/13**
Standard housing materials	Aluminum or Steel
Weight cartridge only	0,5 kg (0.55 lbs)
Seal kit	889625 (Buna-N), 566080 (Viton®)

Viton is a registered trademark of E.I. DuPont.

Pressure drop curves

Cartridge only

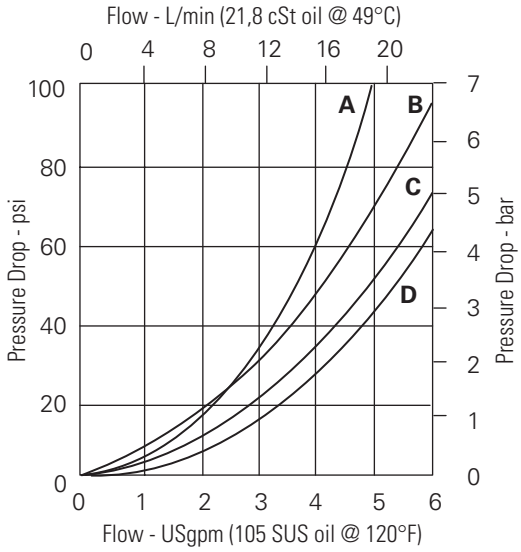

A - Port 3 to 4
B - Port 4 to 1
C - Port 3 to 2
D - Port 2 to 1

Where measurements are critical request certified drawings. We reserve the right to change specifications without notice.

PTS16-10 - Pilot to shift valve

Remote pilot operated, directional control valve
23 L/min (6 USgpm) • 350 bar (5000 psi)

Model code

PTS16 – 10 (V) – * – ** – 00**

1 2 3 4 5 6

1 Function

PTS16 - Pilot to shift valve

2 Size

10 - 10 size

3 Seal material

Blank - Buna-N
V - Viton®

4 Port size

Code	Port size	Housing number		
		Aluminium light duty	Aluminium fatigue rated	Steel
0	Cartridge			
A3B	3/8" BSPP	02-179705	–	–
A6T	SAE 6	566161	–	–
A2G	1/4" BSPP	–	876709	–
A3G	3/8" BSPP	–	876715	–
A6H	SAE 6	–	876708	–
A8H	SAE 8	–	876713	–
S2G	1/4" BSPP	–	–	02-175139
S3G	3/8" BSPP	–	–	02-175140
S6T	SAE 6	–	–	02-175137
S8T	SAE 8	–	–	02-175138

See section J for housing details.

5 Pilot to shift (nominal)

60 - 4,2 bar (60 psi)

6 Special features

00 - None
(Only required if valve has special features, omitted if "00".)

D

Dimensions

mm (inch)

Torque cartridge in aluminum housing 47-75 Nm (35-40 ft lbs)

Torque cartridge in steel housing 68-75 Nm (50-55 ft lbs)

Cartridge only

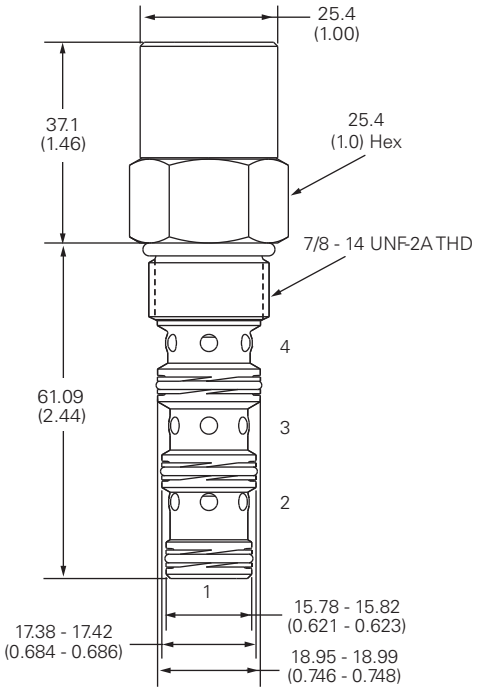

Installation drawing Steel)

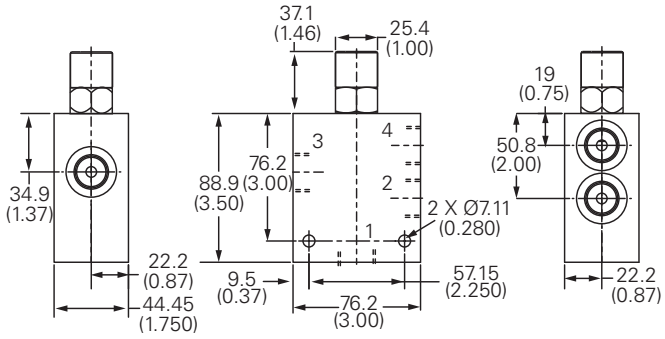

⚠ Warning

Aluminum housings can be used for pressures up to 210 bar (3000 psi). Steel housings must be used for operating pressures above 210 bar (3000 psi).

Where measurements are critical request certified drawings. We reserve the right to change specifications without notice.

PTS16-12 - Pilot to shift valve

Pilot operated, directional control valve
76 L/min (20 USgpm) • 350 bar (5000 psi)

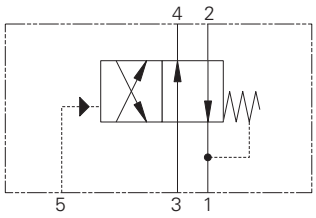

Operation

This valve allows flow between ports 1 and 2 and ports 3 and 4 until sufficient pressure has been applied at port 5 and the spring bias is overcome. At that time, flow is directed between ports 1 and 4 and ports 3 and 2. During the cross-over transition, all ports are blocked. The spring chamber for this valve is vented internally to port 1.

Features

Hardened, ground and honed sleeve and spool for low internal leakage. Working pressure 350 bar.

Sectional view

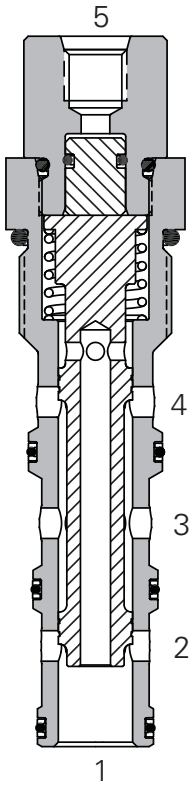

Description

This is a 4-way, 2 position, remotely pilot operated directional control valve ideal for reversing a function when the pilot pressure is applied or lost.

Performance data

Ratings and specifications

Performance data is typical with fluid at 21,8 cST (105 SUS) and 49°C (120°F)	
Typical application pressure (all ports)	350 bar (5000 psi)
Cartridge fatigue pressure (infinite life)	350 bar (5000 psi)
Rated flow	76 L/min (20 USgpm)
Internal leakage	210 cc/min (13in³/min) @ 350 bar (5000 psi)
Temperature range	-40°to 120°C(-40° to 248°F)
Pilot pressures	3,4 bar (50 psi)
Pilot displacement volume	1,97 cm³ (0.12 in³)
Cavity	C-I2-4
Fluids	All general purpose hydraulic fluids such as: MIL-H-5606, SAE 10, SAE 20, etc.
Filtration	Cleanliness code 18/**16/13**
Standard housing materials	Aluminum or Steel
Weight cartridge only	0.32 kg (0.70 lbs)
Seal kit	02-160979 (Buna-N), 02-160980 (Viton®)

Viton is a registered trademark of E.I. DuPont

Pressure drop curves

Cartridge only

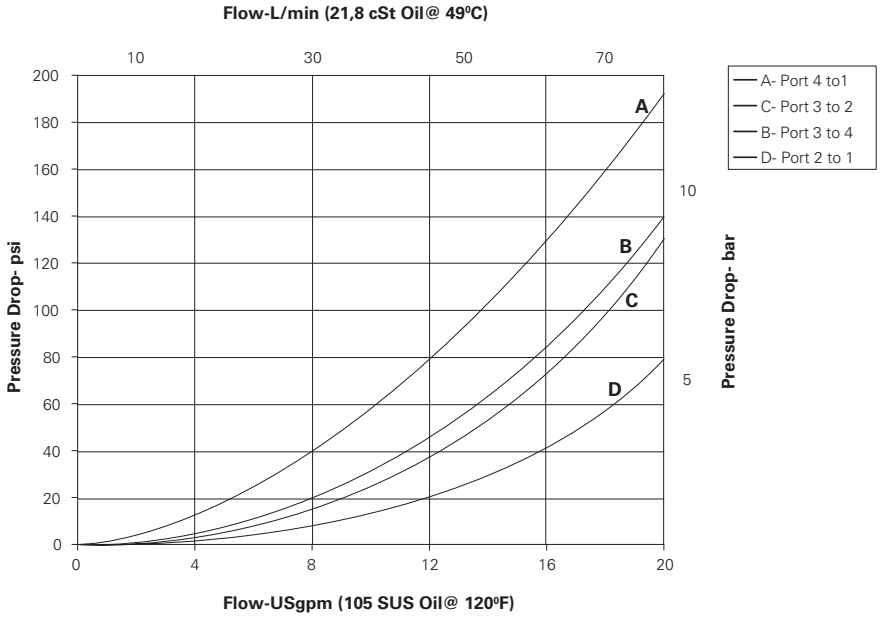

Where measurements are critical request certified drawings. We reserve the right to change specifications without notice.

PTS16-12 - Pilot to shift valve

Pilot operated, directional control valve
76 L/min (20 USgpm) • 350 bar (5000 psi)

Model code

PTS16 – 12 – (V) – * – ** – 00**

1 2 3 4 5 6

1 Function

PTS16 - Pilot to shift valve

2 Size

12 - 12 Size

3 Seals

Blank - Buna-N
V - Viton®

4 Port size

0 - Cartridge only

Code	Port size	Housing number	
		Aluminium	Steel
A4G	1/2" BSPP	5986431-001	
A6G	3/4" BSPP	5986432-001	
A8H	SAE 8	5986433-001	
A10H	SAE 10	5986434-001	
A12H	SAE 12	5986436-001	
S6G	3/4" BSPP		5991073-001
S10T	SAE 10		5991074-001
S12T	SAE 12		5991075-001

See section J for housing details.

5 Pilot to shift (nominal)

50 - 3,4 bar (50 psi)

6 Special features

00 - None
(Only required if valve has special features, omitted if "00")

D

Dimensions

mm (inch)

Torque cartridge in aluminum housing 81-95 Nm (60-70 ft. lbs)

Torque cartridge in steel housing 102-115 Nm (75-85 ft. lbs)

Cartridge only

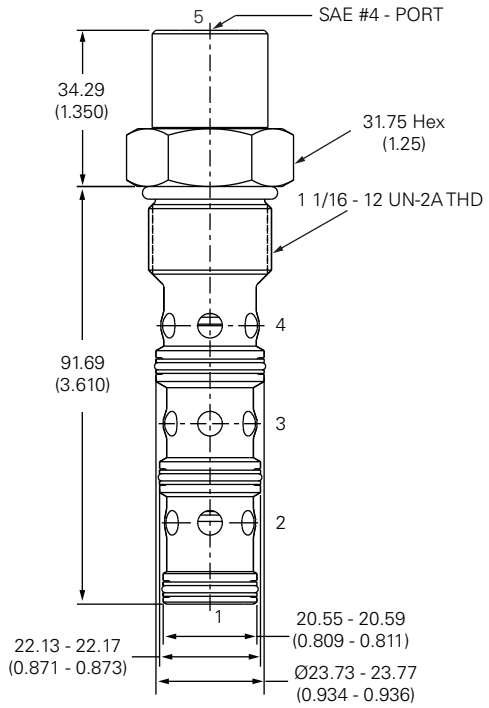

Installation drawing (Steel)

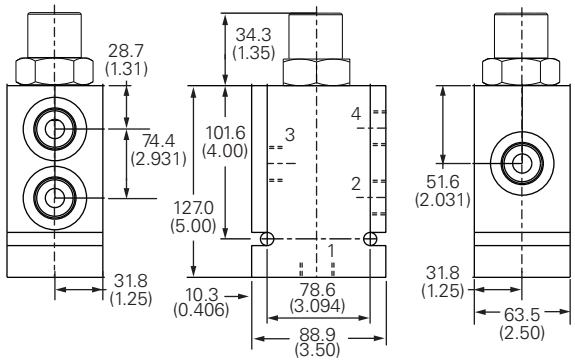

⚠ Warning

Aluminum housings can be used for pressures up to 210 bar (3000 psi). Steel housings must be used for operating pressures above 210 bar (3000 psi).

Where measurements are critical request certified drawings. We reserve the right to change specifications without notice.

Hydraulics
Valves

Mobile & Industrial

Proportional Valves Service Program

Searcy, AR Plant

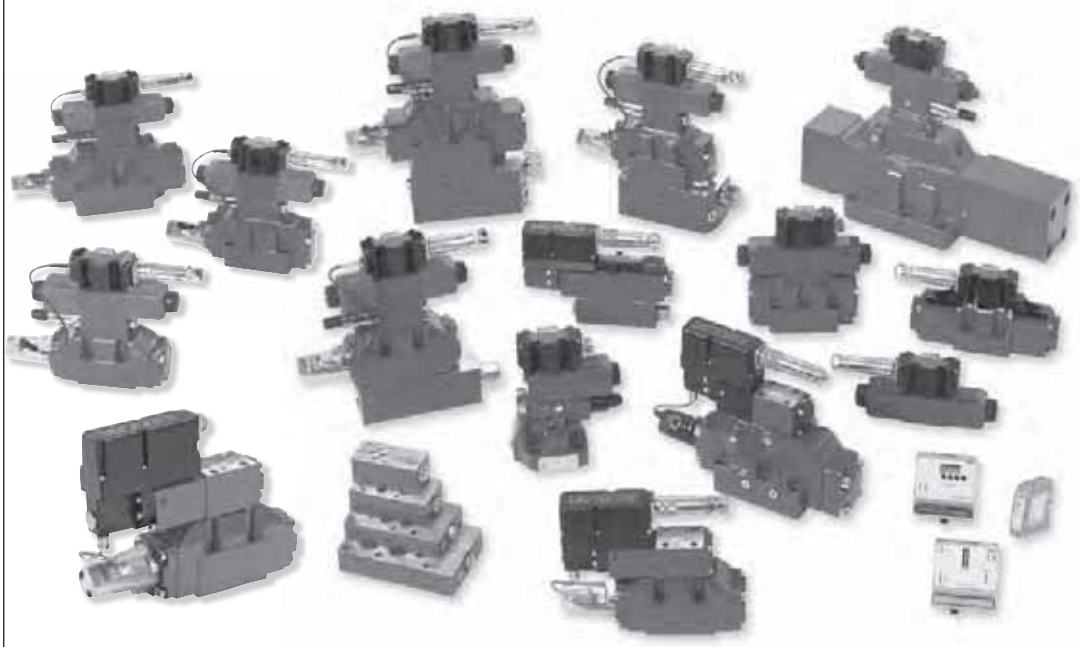

Factory service offered through North American distributor network.
Charge repair program (not warranty administration).
Vickers proportional valves: models KC/D/T and KBC/D/T, full range.

Factory service:
- Quick: standard 3 to 5 days, NEXT DAY service at a 50% premium
- Genuine parts
- Factory tested and performance validated
- Factory warranty extension

Service charges predetermined, 3 service levels:
- Level 1 - Test, flush, validate and calibrate
- Level 2 - Tear down, clean, inspect, assemble, test and calibrate.
- Level 3 - Level 2 price plus charge for new parts

Conversion of distributor stock or customer valves handled as level 2 or 3.

Program information and pricing is posted on Customer Connect
- Fixed prices by product size and type
- RMA through Eden Prairie Customer Service
- Searcy plant coordinates the repair and expedites premium service jobs

E-mail: RepairServiceSearcy@eaton.com

EATON
Powering Business Worldwide

Pressure control

Direct and pilot operated pressure control valves for applications up to 350 bar (5000 psi) and 300 L/min (80 USgpm)



Powering Business Worldwide

Pressure control

PRESSURE CONTROLS E-4
1DR2 - RELIEF VALVE E-10
1DR30 - RELIEF VALVE E-12
RV1-10 - RELIEF VALVE E-14
RV1-12 - RELIEF VALVE E-16
RV5-10 - RELIEF VALVE E-18
RV11-12 - RELIEF VALVE E-20
1AR100 - RELIEF VALVE E-22
RV5-16 - RELIEF VALVE E-24
1ARD100 - SHOCKLESS RELIEF VALVE E-26
RV4-10 - RELIEF VALVE E-28
RV2-10 - RELIEF VALVE E-30
1ARC100 - RELIEF VALVE E-32
RV8-8 - RELIEF VALVE E-34
RV3-10 - RELIEF VALVE E-36
RV8-10 - RELIEF VALVE E-38
RV3-12 - RELIEF VALVE E-40
RV8-12 - RELIEF VALVE E-42
RV8-16 - RELIEF VALVE E-44
1LR300 - RELIEF VALVE E-46
1UAR100 - RELIEF VALVE E-48
1GR30 - RELIEF VALVE E-50
1GR60 - RELIEF VALVE E-52
1GR100 - RELIEF VALVE E-54
1VR100 - RELIEF VALVE E-56
1VR200 - RELIEF VALVE E-58
1UL60 - RELIEF/UNLOADING VALVE E-60
1PUL60 - RELIEF/UNLOADING VALVE E-62
1PUL200 - RELIEF/UNLOADING VALVE E-64
1CLLR50 - DUAL RELIEF VALVE E-66
1CLLR100 - DUAL RELIEF VALVE E-68
PSV2-8 - PRESSURE SEQUENCE VALVE E-70
PSV4-8 - PRESSURE SEQUENCE VALVE E-72
PSV8-10 PRESSURE SEQUENCE VALVE E-74
PSV10-10 - PRESSURE SEQUENCE VALVE E-76
PSV2-10 - PRESSURE SEQUENCE VALVE E-78
PSV4-10 - PRESSURE SEQUENCE VALVE E-80
PSV1-10 - PRESSURE SEQUENCE VALVE E-82
PSV5-10 - PRESSURE SEQUENCE VALVE E-84
PSV3-10 - PRESSURE SEQUENCE VALVE E-86
PSV7-10 - PRESSURE SEQUENCE VALVE E-88
1DS30 - PRESSURE SEQUENCE VALVE E-90
1DS60 - PRESSURE SEQUENCE VALVE E-92
1DS100 - PRESSURE SEQUENCE VALVE E-94
1PS60 - PRESSURE SEQUENCE VALVE E-96
1PS100 - PRESSURE SEQUENCE VALVE E-98
PSV1-16 - PRESSURE SEQUENCE VALVE E-100
1PS200 - PRESSURE SEQUENCE VALVE E-102
PSV11-16 - 16 -PRESSURE SEQUENCE VALVE E-104
1PSC30 - PRESSURE SEQUENCE VALVE E-106
1PSC100 - PRESSURE SEQUENCE VALVE E-108
1UPS100 - PRESSURE SEQUENCE VALVE E-110
PUV3-10 - PILOT UNLOADING VALVE E-112
ADV1-16 - ACCUMULATOR DISCHARGE VALVE E-114
PRV1-10 - PRESSURE REDUCING/RELIEVING VALVE E-116
PRV2-10 - PRESSURE REDUCING/RELIEVING VALVE E-118
PRV12-10 - PRESSURE REDUCED/RELIEVING VALVE E-120
PRV12-12 - PRESSURE REDUCING/RELIEVING VALVE E-122
1PA100 - PRESSURE REDUCING VALVE E-124
PRV2-16 - PRESSURE REDUCING/RELIEVING VALVE E-126
1PA200 - PRESSURE REDUCING VALVE E-128
1PDC5 - PRESSURE REDUCING VALVE E-130

Pressure controls

Valve locator

Functional symbol

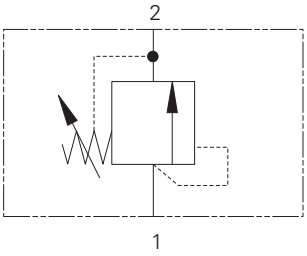

Model	Cavity	Flow rating	Typical pressure	Page
Relief valve, poppet		L/min (USgpm)	bar (psi)	
1DR2	A879	1.2 (0.3)	400 (5800)	E-10
1DR30	A879	30 (8)	400 (5800)	E-12
RV1-10	C-10-2	30 (8)	210 (3000)	E-14
RV1-12	C-12-2 (u)	114 (30)	350 (5000)	E-16

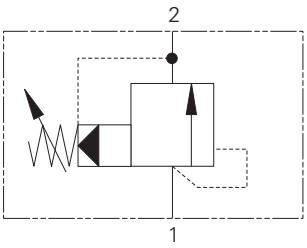

Model	Cavity	Flow rating	Typical pressure	Page
Relief valve, spool		L/min (USgpm)	bar (psi)	
RV5-10	C-10-2	114 (30)	350 (5000)	E-18
RV11-12	C-12-2 (u)	190 (50)	350 (5000)	E-20
1AR100	A881	150 (40)	400 (5800)	E-22
RV5-16	C-16-2	300 (80)	350 (5000)	E-24

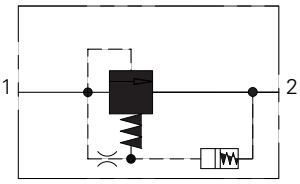

Model	Cavity	Flow rating	Typical pressure	Page
Shockless Relief Valve, Poppet		L/min (USgpm)	bar (psi)	
1ARD100	A881	100 (26)	210 (3000)	E-26

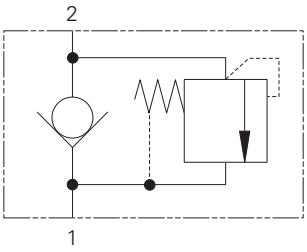

Model	Cavity	Flow Rating	Typical pressure	Page
Relief valve, poppet		L/min (USgpm)	bar (psi)	
RV4-10	C-10-2	1/45 (0.25/12)	350 (5000)	E-28

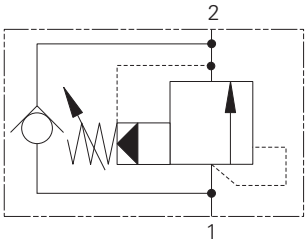

Model	Cavity	Flow rating	Typical pressure	Page
Relief valve, spool		L/min (USgpm)	bar (psi)	
RV2-10	C-10-2	12-114 (3-30)	350 (5000)	E-30
1ARC100	A881	150 (40)	400 (5800)	E-32

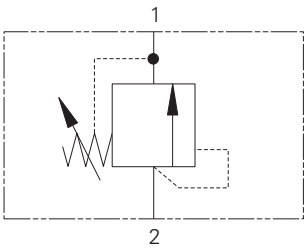

Model	Cavity	Flow rating	Typical pressure	Page
Relief valve, poppet		L/min (USgpm)	bar (psi)	
RV8-8	C-8-2	30 (8)	350 (5000)	E-34
RV3-10	C-10-2	76 (20)	250 (3600)	E-36
RV8-10	C-10-2	76 (20)	350 (5000)	E-38
RV3-12	C-12-2 (u)	132 (35)	350 (5000)	E-40
RV8-12	C-12-2 (u)	132 (35)	350 (5000)	E-42
RV8-16	C-16-2	300 (80)	350 (5000)	E-44
1LR300	A1126	380 (100)	350 (5000)	E-46

Where measurements are critical request certified drawings. We reserve the right to change specifications without notice.

Functional symbol

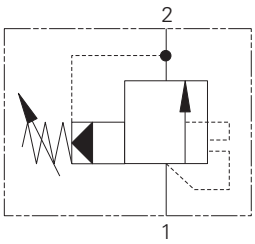

Model	Cavity	Flow rating	Typical pressure	Page
Relief valve, spool, unloading		L/min (USgpm)	bar (psi)	
1UAR100	A881	150 (40)	350 (5000)	E-48

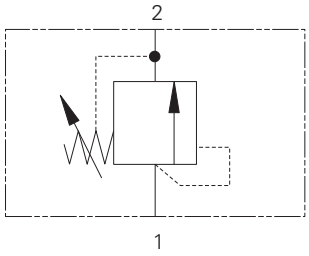

Model	Cavity	Flow rating	Typical pressure	Page
Relief valve, spool		L/min (USgpm)	bar (psi)	
1GR30	A881	30 (8)	160 (2300)	E-50
1GR60	CVA20-01-0	60 (16)	40 (600)	E-52
1GR100	A881	150 (40)	40 (600)	E-54

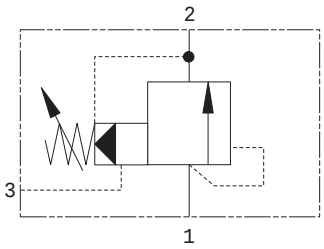

Model	Cavity	Flow rating	Typical pressure	Page
Relief ventable, spool		L/min (USgpm)	bar (psi)	
1VR100	A3146	100 (26)	350 (5000)	E-56
1VR200	A16102	200 (52)	350 (5000)	E-58

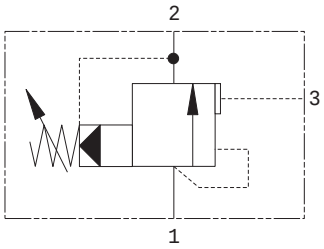

Model	Cavity	Flow rating	Typical pressure	Page
Unloading		L/min (USgpm)	bar (psi)	
1UL60	A3146	60 (16)	350 (5000)	E-60

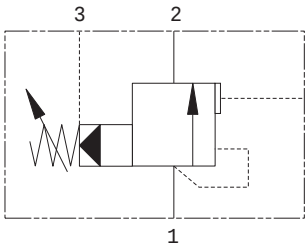

Model	Cavity	Flow rating	Typical pressure	Page
Unloading		L/min (USgpm)	bar (psi)	
1PUL60	A12088	60 (16)	350 (5000)	E-62
1PUL200	A3145	200 (52)	350 (5000)	E-64

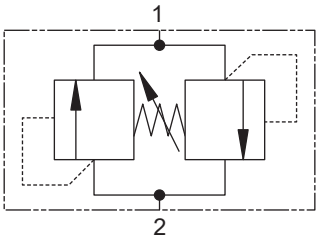

Model	Cavity	Flow rating	Typical pressure	Page
Relief dual		L/min (USgpm)	bar (psi)	
1CLLR50	C-10-2	50 (12)	250 (3625)	E-66
1CLLR100	A878	150 (40)	350 (5000)	E-68

Where measurements are critical request certified drawings. We reserve the right to change specifications without notice.

Pressure controls

Valve locator

Functional symbol

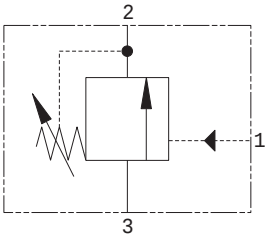

Model	Cavity	Flow rating	Typical pressure	Page
Pressure sequence valve, spool		**L/min (USgpm)**	**bar (psi)**	
PSV2-8	C-8-3	23 (6)	210 (3000)	E-70
PSV4-8	C-8-3	15 (4)	350 (5000)	E-72
PSV2-10	C-10-3	23 (6)	210 (3000)	E-78
PSV4-10	C-10-3	15 (4)	210 (3000)	E-80

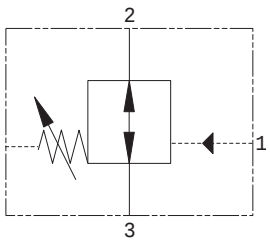

Model	Cavity	Flow rating	Typical pressure	Page
Series sequence valve, NO, spool		**L/min (USgpm)**	**bar (psi)**	
PSV8-10	C-10-4	23 (6)	210 (3000)	E-74

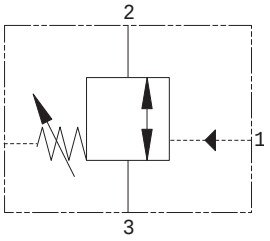

Model	Cavity	Flow rating	Typical pressure	Page
Series sequence valve, NC, spool		**L/min (USgpm)**	**bar (psi)**	
PSV10-10	C-10-4	23 (6)	210 (3000)	E-76

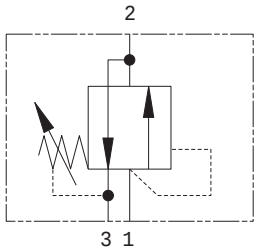

Model	Cavity	Flow rating	Typical pressure	Page
Series sequence valve, spool		**L/min (USgpm)**	**bar (psi)**	
PSV1-10	C-10-3	23 (6)	210 (3000)	E-82
PSV5-10	C-10-3	8 (2)	210 (3000)	E-84

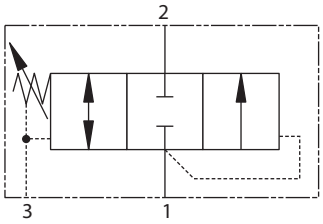

Model	Cavity	Flow rating	Typical pressure	Page
Series sequence valve, spool		**L/min (USgpm)**	**bar (psi)**	
PSV3-10	C-10-3	23 (6)	210 (3000)	E-86

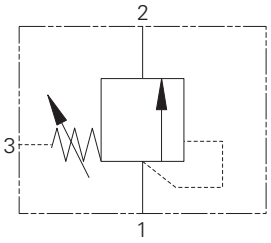

Model	Cavity	Flow rating	Typical pressure	Page
Series sequence valve, spool		**L/min (USgpm)**	**bar (psi)**	
PSV7-10	C-10-3	23 (6)	210 (3000)	E-88
1DS30	A880	30 (8)	140 (2000)	E-90
1DS60	CVA-22-06-0	60 (16)	40 (600)	E-92
1DS100	A880	150 (40)	40 (600)	E-94

Where measurements are critical request certified drawings. We reserve the right to change specifications without notice.

Functional symbol

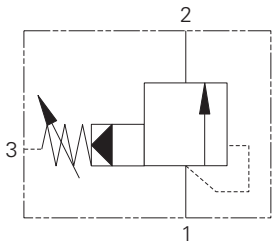

Model	Cavity	Flow rating	Typical pressure	Page
Series sequence valve, spool		L/min (USgpm)	bar (psi)	
1PS60	CVA-22-06-0	60 (16)	350 (5000)	E-96
1PS100	A880	150 (40)	350 (5000)	E-98
1PS200	A16102	250 (60)	350 (5000)	E-102
PSV11-16	C-16-3S	230 (60)	350 (5000)	E-104

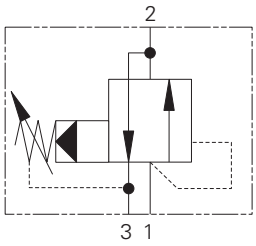

Model	Cavity	Flow rating	Typical pressure	Page
Series sequence valve, spool		L/min (USgpm)	bar (psi)	
PSV1-16	C-16-3	95 (25)	350 (5000)	E-100

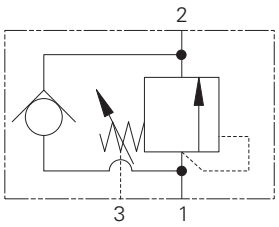

Model	Cavity	Flow rating	Typical pressure	Page
Series sequence valve, spool		L/min (USgpm)	bar (psi)	
1PSC30	A6610	30 (8)	350 (5000)	E-106

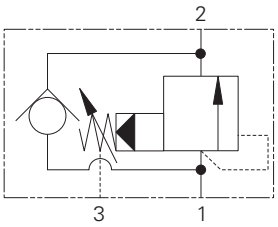

Model	Cavity	Flow rating	Typical pressure	Page
Series sequence valve, spool		L/min (USgpm)	bar (psi)	
1PSC100	A880	150 (40)	350 (5000)	E-108

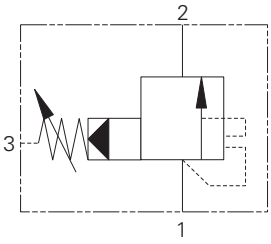

Model	Cavity	Flow rating	Typical pressure	Page
Series sequence valve, spool, unloading		L/min (USgpm)	bar (psi)	
1UPS100	A880	150 (40)	350 (5000)	E-110

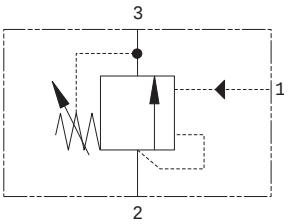

Model	Cavity	Flow rating	Typical pressure	Page
Pilot unloading valve		L/min (USgpm)	bar (psi)	
PUV3-10	C-10-3	4 (1)	210 (3000)	E-112

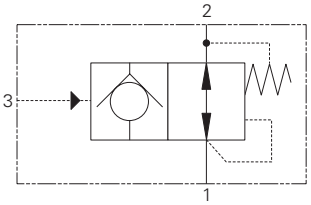

Model	Cavity	Flow Rating	Typical Pressure	Page
Accumulator discharge valve		L/min (USgpm)	bar (psi)	
ADV1-16	C-16-3S	30 (8)	210 (3000)	E-114

Where measurements are critical request certified drawings. We reserve the right to change specifications without notice.

Pressure controls

Valve locator

Functional symbol

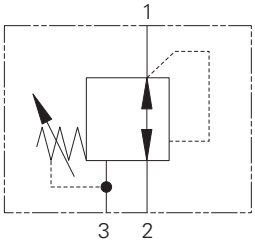

Model	Cavity	Flow rating	Typical pressure	Page
Pressure reducing valve, spool		**L/min (USgpm)**	**bar (psi)**	
PRV1-10	C-10-3	15 (4)	165 (2400)	E-116

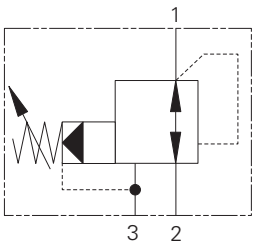

Model	Cavity	Flow rating	Typical pressure	Page
Pressure reducing valve, spool		**L/min (USgpm)**	**bar (psi)**	
PRV2-10	C-10-3	38 (10)	240 (3500)	E-118
PRV12-10	C-10-3	45 (12)	350 (5000)	E-120
PRV12-12	C-12-3	114 (30)	350 (5000)	E-122
PRV2-16	C-16-3	151 (40)	350 (5000)	E-126

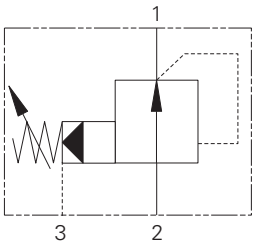

Model	Cavity	Flow rating	Typical pressure	Page
Pressure reducing valve, spool		**L/min (USgpm)**	**bar (psi)**	
1PA100	A880	100 (26)	10-350 (150-5000)	E-124
1PA200	A16102	200 (52)	350 (5000)	E-128

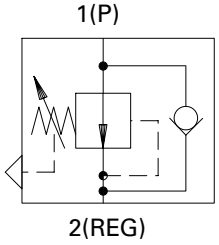

Model	Cavity	Flow rating	Typical pressure	Page
Pressure reducing valve with check		**L/min (USgpm)**	**bar (psi)**	
1PDC5	C-12-2	6 (1.5)	350 (5000)	E-130

Where measurements are critical request certified drawings. We reserve the right to change specifications without notice.

This section gives basic specifications for Eaton pressure control threaded cartridge valves. Its purpose is to provide a quick, convenient reference tool when choosing Eaton cartridge valves or designing a system using these components.

Eaton offers a full range of Eaton direct and pilot operated relief, reducing, sequence and unloading valves. In general, he direct operated products are faster in response while pilot operated types have a flatter pressure/flow characteristic.

Relief valves

When selecting a relief valve for a specific application, consideration should be given to the following

- **Direct operated poppet types – RV1 and RV10**
  Suitable for continuous duty with reliable fast response, the RV10 being a low pressure, low cost option. These valves are also suitable for piloting the DPS2 logic elements.
- **Pilot operated poppet type with reverse free-flow check – RV2**
  Use as a service line relief where anticavitation make-up is required. It may also be applied as an internally piloted counterbalance valve in a service line.
- **Direct operated poppet type, differential area models – RV3 and RV8**
  Sometimes termed a "differential area relief valve". A fast acting valve, highly tolerant of contaminant and providing an alternative flow path, frequently beneficial in manifold layout. Utilized in CRV3 crossline relief packages.
- **Pilot operated spool type – RV5 and RV11**
  Well suited for repetitive, continuous duty with a low pressure-override characteristic.
- **Direct operated ball type – RV6**
  A fast-acting valve for intermittent duty. This low flow, low cost valve may be used as a pilot section for a larger mainstage valve, or piloting logic elements.

Reducing valves

Two types are available:

- Direct operated with relieving feature – PRV1
- Pilot operated with relieving feature – PRV2 and PRV12
- Pilot operated without relieving feature

Sequence valves

A complete range of sequence functions is available, including:

- Normally-closed and normally-open models
- Internal and external pilot options
- Internal and external drain options
- Two and three position models

Externally drained models may be used as relief valves in circuits with alternating pressure and tank line functions.

Accumulator unloading valves

Valves that allow accumulators to be charged to a preselected maximum pressure at which the pump is unloaded. The pump does not cut-in until the accumulator pressure has decayed to a pre-selected percentage of maximum pressure. The low-flow PUV3 model can be used as a stand alone model for low flow applications, or as a pilot stage in two-stage arrangements for higher flows.

Accumulator discharge valve

This valve is designed to ensure that an accumulator will discharge when pilot pressure is lost, e.g. on pump shutdown.

Fluid cleanliness

Proper fluid condition is essential for long and satisfactory life of hydraulic components and systems. Hydraulic fluid must have the correct balance of cleanliness, materials, and additives for protection against wear of components, elevated viscosity, and inclusion of air.

E

Adjustments

The adjustment range and Max setting figures shown throughout this catalogue give the design range for each valve, higher or lower values may be attainable but should not be used without first contacting our Engineering department. Setting must ALWAYS be carried out using an appropriate gauge and it must NOT be assumed that screwing an adjuster to its maximum or minimum position will yield the maximum or minimum stated design setting for that valve.

Tightening torque of "F" adjuster locknut - 20 to 25 Nm

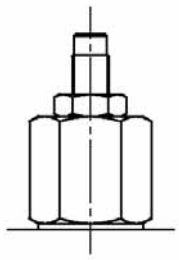

'P' - Leakproof Screw

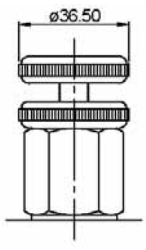

'R' - Handknob

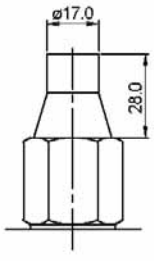

'G' - Tamperproof Cap

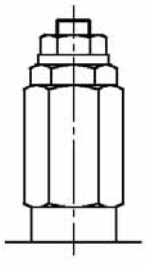

'F' - Screw

Where measurements are critical request certified drawings. We reserve the right to change specifications without notice.

1DR2 - Relief valve

Poppet, direct acting
1,2 L/min (0.3 USgpm) • 400 bar (5800 psi)

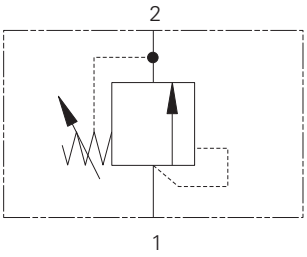

Operation

Pressure on the nose of the cartridge acts over the seat area moving the poppet against the spring, allowing relief flow to tank.

Features

Fast acting, good reseat, ideal for remote operation of larger valves.

Sectional view

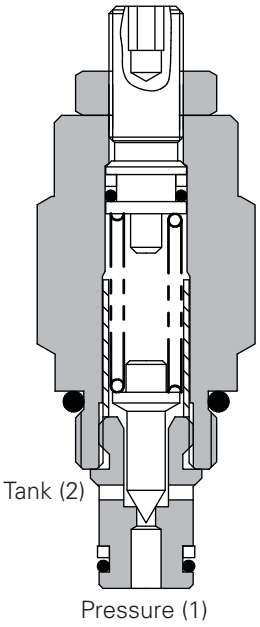

Performance data

Ratings and specifications

Performance data is typical with fluid at 32 cSt (150 SUS)	
Typical application pressure	400 bar (5800 psi)
Rated flow	1,2 L/min (0.3 USgpm)
Cartridge Material	Working parts hardened and ground steel. External sufaces zinc plated.
Cavity	C-8-2 (see Section M)
Standard housing materials	Aluminum (up to 210 bar) or Steel (add 377 suffix for steel option)
Torque Cartridge into Cavity	45 Nm (33 lbs ft)
Temperature range	-30° to 90°C (-22° to 194°F)
Fluids	All general purpose hydraulic fluids such as: MIL–H–5606, SAE 10, SAE 20, etc.
Filtration	Cleanliness Code BS5540-4 18/13 (25 micron nominal)
Weight cartridge only	0,14 (0.30)
Internal leakage	0.3 ml/min nominal (5 dpm)
Nominal Viscocity Range	5 to 500 cSt
Seal kits	SK187-02 Buna–N SK187-02V Viton®

Viton is a registered trademark of E.I. DuPont

Description

This is a direct acting, poppet style screw in cartridge relief valve which is ideally suited for use as a pilot valve or a thermal relief.

Pressure override curves

Cartridge only

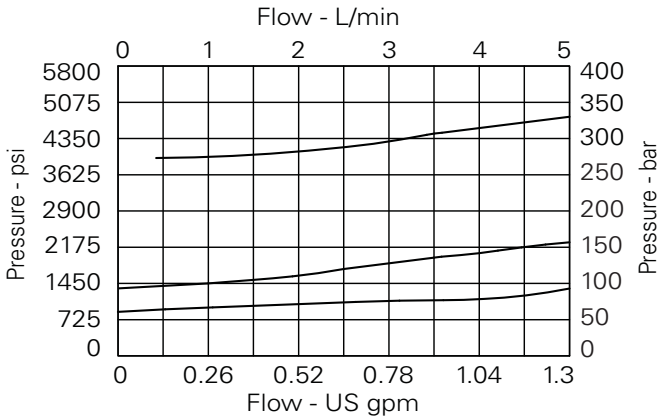

Where measurements are critical request certified drawings. We reserve the right to change specifications without notice.

1DR2 - Relief valve

Poppet, direct acting
1,2 L/min (0.3 USgpm) • 400 bar (5800 psi)

Model code

1DR ** _ **P** **3W** _ **40** _ **S**

1 2 3 4 5

1 Function

1DR2 - Cartridge only
1DR22 - Cartridge and body

2 Adjustment

P - Leakproof screw adjustment
R - Handknob adjustment
G - Tamperproof cap (see page E-7 for dimensions)

3 Port size - bodied valves only

Code	Port size	Housing number	
		Aluminium	Steel
0		Cartridge only	
2W	1/4" BSP	A1485	
3W	3/8" BSP	A1043	A14175
6T	3/8" SAE	A15676	A14843

See section J for housing details.

4 Pressure range at 0.5 L/min

Note: Code based on pressure in bar.

10 - 7-100 bar (100-1450 psi) - std setting at 70 bar
20 - 35-210 bar (500-3000 psi) - std setting at 100 bar
40 - 50-400 bar (725-5800 psi) - std setting at 280 bar

5 Seal material

S - Nitrile (for use with most industrial hydraulic oils)
SV - Viton® (for high temperature and most special fluid applications)

Dimensions

mm (inch)

Cartridge only

Torque cartridge in housing
A - 47-54 Nm (35-40 ft. lbs)
S - 68-75 Nm (50-55 ft. lbs)

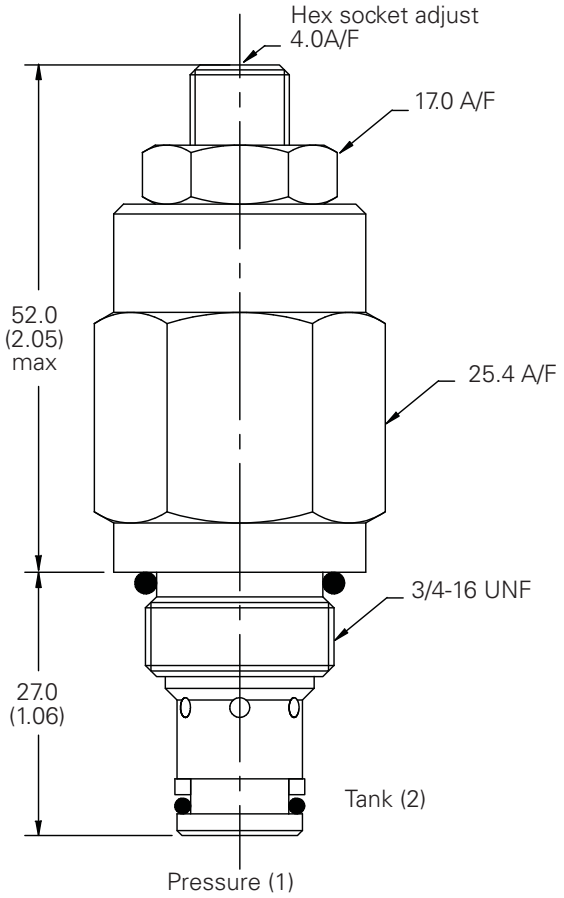

Installation drawing

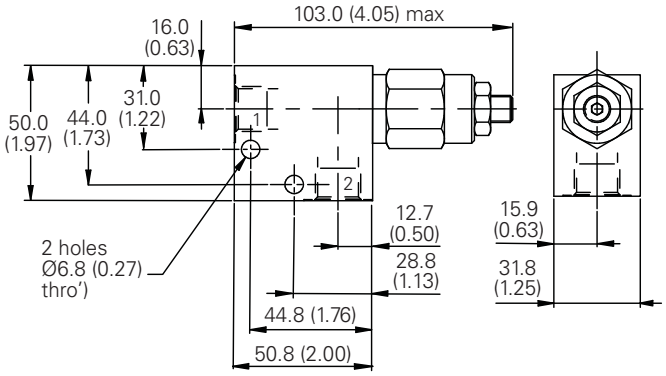

⚠ Warning

Aluminum housings can be used for pressures up to 210 bar (3000 psi). Steel housings must be used for operating pressures above 210 bar (3000 psi).

Where measurements are critical request certified drawings. We reserve the right to change specifications without notice.

E

1DR30 - Relief valve

Poppet, direct acting
30 L/min (8 USgpm) • 400 bar (5800 psi)

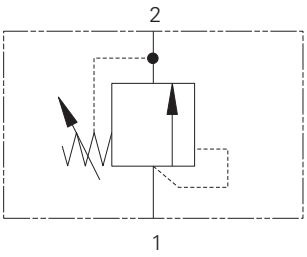

Operation

Pressure on the nose of the cartridge acts over the seat area moving the poppet against the spring, allowing relief flow to tank.

Features

Fast acting, low pressure rise due to flow for a direct acting valve.

Sectional view

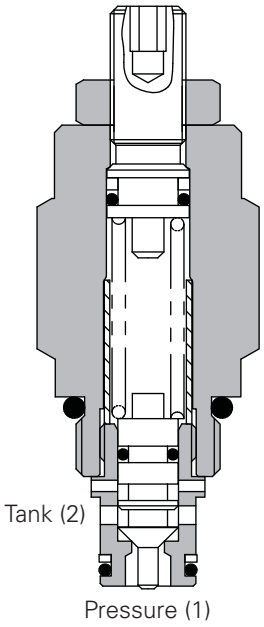

Performance data

Ratings and specifications

Performance data is typical with fluid at 32 cSt (150 SUS) and 40° C (120° F)	
Typical application pressure	400 bar (5800 psi)
Rated flow	30 L/min (8 USgpm)
Cartridge Material	Working parts hardened and ground steel. External sufaces zinc plated.
Cavity	C-8-2 (see Section M)
Standard housing materials	Aluminum (up to 210 bar) or Steel (add 377 suffix for steel option)
Torque Cartridge into Cavity	45 Nm (33 lbs ft)
Temperature range	-30° to 90°C (-22° to 194°F)
Fluids	All general purpose hydraulic fluids such as: MIL–H–5606, SAE 10, SAE 20, etc.
Filtration	Cleanliness Code BS5540-4 18/13 (25 micron nominal)
Weight cartridge only	0,17 kg (0.37)
Internal leakage	0.3 ml/min nominal (5 dpm)
Nominal Viscocity Range	5 to 500 cSt
Seal kits	SK243 Buna–N SK243V Viton®

Viton is a registered trademark of E.I. DuPont

Description

This is a direct acting, poppet style screw in cartridge relief valve, it is an economical solution for small flow systems where a fast response is required.

Pressure override curves

Cartridge only

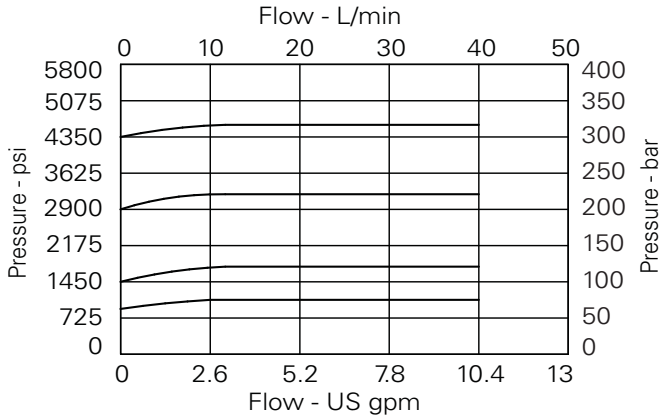

Where measurements are critical request certified drawings. We reserve the right to change specifications without notice.

1DR30 - Relief valve

Poppet, direct acting
30 L/min (8 USgpm) • 400 bar (5800 psi)

Model code

1DR ** _ P 3W _ 40 _ S**

1 2 3 4 5

1 Function

1DR30 - Cartridge only
1DR35 - Cartridge and body

2 Adjustment

P - Leakproof screw adjustment
R - Handknob adjustment
G - Tamperproof cap (see page E-7 for dimensions)

3 Port size - bodied valves only

Code	Port size	Housing number	
		Aluminium	Steel
0	Cartridge only		
2W	1/4" BSP	A1485	
3W	3/8" BSP	A1043	A14175
6T	3/8" SAE	A15676	A14843

See section J for housing details.

4 Pressure range at 4.8 L/min

Note: Code based on pressure in bar.

10 - 7-100 bar (100-1450 psi) - std setting at 70 barr
20 - 35-210 bar (500-3000 psi) - std setting at 100 bar
40 - 50-400 bar (725-5800 psi) - std setting at 280 bar

5 Seal material

S - Nitrile (for use with most industrial hydraulic oils)
SV - Viton® (for high temperature and most special fluid applications)

Dimensions

mm (inch)

Torque cartridge in housing
A – 47-54 Nm (35-40 ft. lbs)
S – 68-75 Nm (50-55 ft. lbs)

Cartridge only

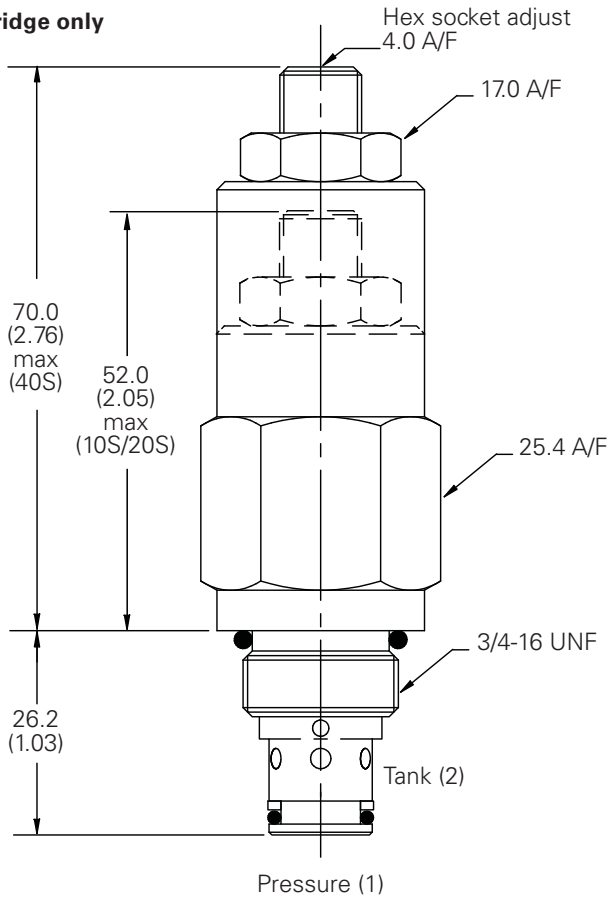

Installation drawing

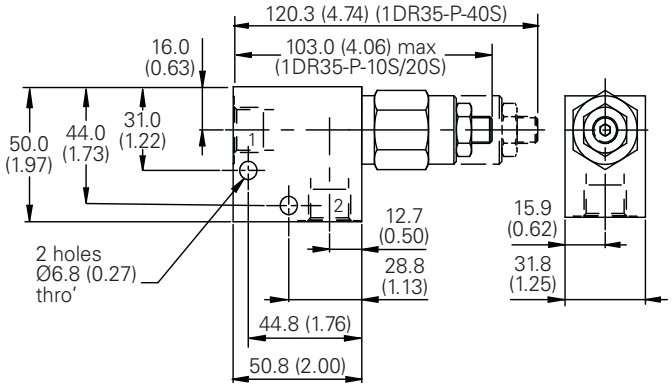

⚠ Warning
Aluminum housings can be used for pressures up to 210 bar (3000 psi). Steel housings must be used for operating pressures above 210 bar (3000 psi).

Where measurements are critical request certified drawings. We reserve the right to change specifications without notice.

RV1-10 - Relief valve

Poppet, direct acting
30 L/min (8 USgpm) • 250 bar (3600 psi)

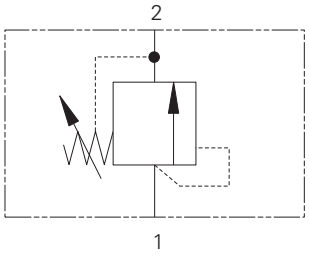

Operation

This valve remains closed from port 1 to port 2 until the predetermined setting has been reached at port 1.

The poppet is unseated and allows flow out of port 2.

Features

Fast acting, low pressure rise. Low internal leakage, high flow rate for compact design

Sectional view

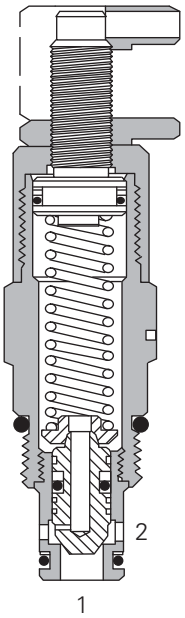

Performance data

Ratings and specifications

Performance data is typical with fluid at 21,8 cSt (105 SUS) and 49° C (120° F)	
Typical application pressure (all ports)	250 bar (3600 psi)
Cartridge fatigue pressure (infinite life)	250 bar (3600 psi)
Rated flow	30 L/min (8 USgpm)
Internal leakage	0.3 L/min (5 drops/min) @ 85% of Pressure Setting
Cavity	C-10–2
Standard housing materials	Aluminum or steel
Temperature range	-40° to 120°C (-40° to 248°F)
Fluids	All general purpose hydraulic fluids such as: MIL–H–5606, SAE 10, SAE 20, etc.
Filtration	Cleanliness Code 18/**16/13**
Weight cartridge only	0,22 kg (0.48 lbs)
Seal kits	565803 Buna–N 566086 Viton®

Viton is a registered trademark of E.I. DuPont

Description

This is a direct acting, poppet style screw in cartridge relief valve ideal for low cost small flow applications to limit the pressure in the system.

Pressure override curves

Cartridge only

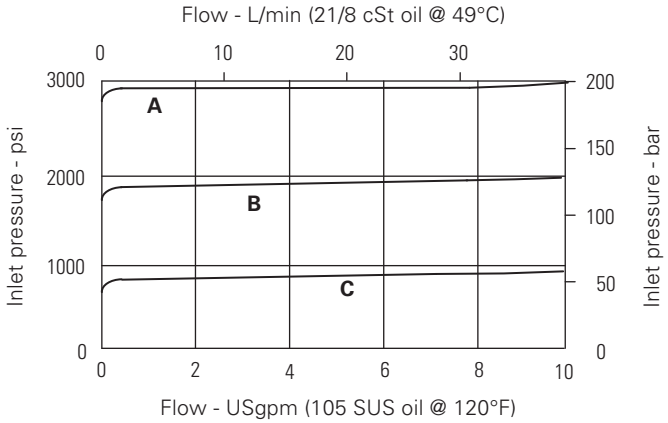

A - 36 spring
B - 18 spring
C - 9 spring

Where measurements are critical request certified drawings. We reserve the right to change specifications without notice.

RV1-10 - Relief valve

Poppet, direct acting
30 L/min (8 USgpm) • 250 bar (3600 psi)

Model code

RV1(A) – 10 (V) – * – (*) – ** – **/ ** – 00

1 2 3 4 5 6 7 8 9

1 Function

RV1 - Relief valve - Standard
RV1A - Relief valve - with 1/2 thickness back-up ring on each side of o-ring (for cross port relief applications)

2 Size

10 - 10 size

3 Seal material

Blank - Buna-N
V - Viton®

4 Adjustment

C - Cap
F - Factory set
I - Internal
K - Knob
S - Screw

5 Valve housing material

Blank - Aluminum
S - Steel

6 Port size

Code	Port size	Housing Number		
		Aluminum Light duty	Aluminum Fatigue rated	Steel Fatigue rated
0	Cartridge only			
3B	3/8" BSPP	02–175462	–	–
2G	1/4" BSPP	–	876702	02–175102
3G	3/8" BSPP	–	876703	02–175103
6H	SAE 6	–	876700	–
8H	SAE 8	–	876701	–
6T	SAE 6	566151	–	02–175100
8T	SAE 8	–	–	02–175101

See section J for housing.

7 Cracking pressure range

Note: Code based on pressure in psi.
3 -3,5-20 bar (50-300 psi)
9 -7- 62 bar (100-900 psi)
18 - 17-124 bar (250-1800 psi)
30 - 34-210 bar (600-3000 psi)
36 - 124-250 bar (1800-3600 psi)

8 Setting pressure

Within ranges in 7

Blank - Normal factory setting at approximate mid-range. User requested settings in 3,45 bar (50 psi) steps, Coded as in the following examples:
10 -70 bar (1000 psi)
10.5 -72,4 bar (1050 psi)

9 Special features

00 - None
(Only required if valve has special features, omitted if "00.")
SS - 316 Stainless Steel external components

⚠ Warning

Aluminum housings can be used for pressures up to 210 bar (3000 psi). Steel housings must be used for operating pressures above 210 bar (3000 psi).

Dimensions

mm (inch)

Torque cartridge in housing
A - 47-54 Nm (35-40 ft. lbs)
S - 68-75 Nm (50-55 ft. lbs)

Cartridge only

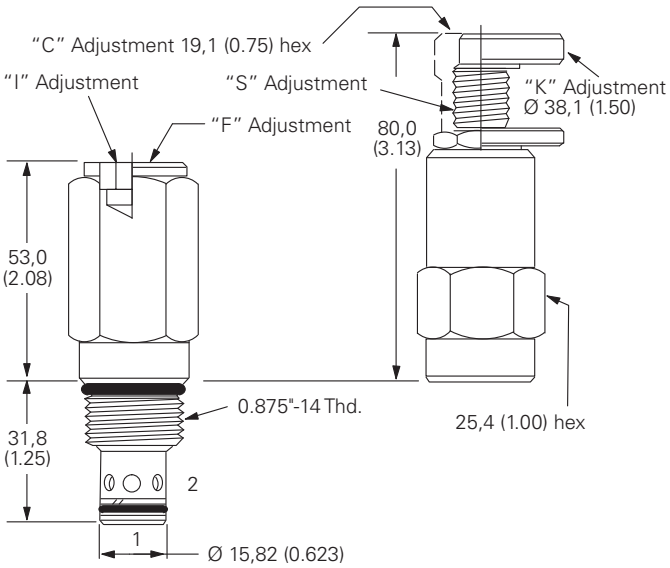

Installation drawing (Aluminum)

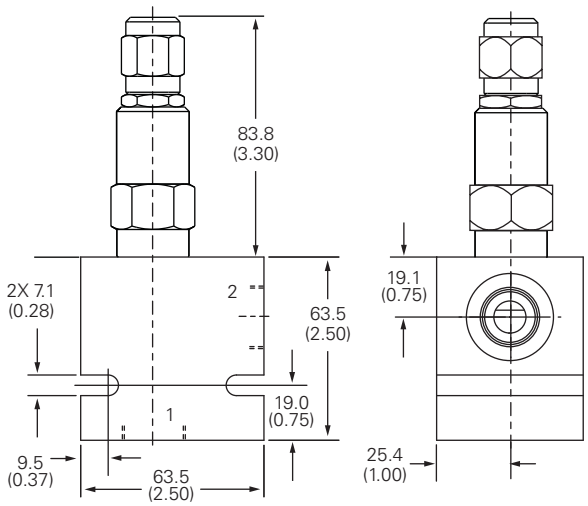

Where measurements are critical request certified drawings. We reserve the right to change specifications without notice.

E

RV1-12 - Relief valve

Poppet, direct acting
114 L/min (30 USgpm) • 350 bar (5000 psi)

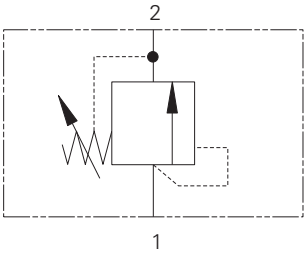

Operation

This valve remains closed from port 1 to port 2 until the predetermined setting has been reached at port 1.

The poppet is unseated and allows flow out of port 2.

Features

Hardened and ground working parts. Low leakage poppet design. High flow rate for a compact cartridge.

Sectional view

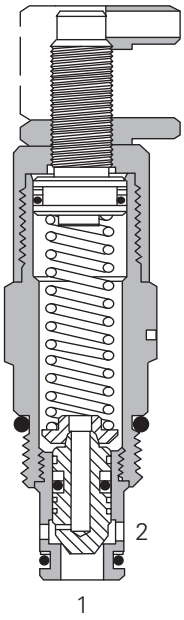

Performance data

Ratings and specifications

Performance data is typical with fluid at 23,3 cSt (111 SUS) and 49° C (120° F)	
Typical application pressure (all ports)	350 bar (5000 psi)
Cartridge fatigue pressure (infinite life)	350 bar (5000 psi)
Rated flow	114 L/min (30 USgpm)
Cracking pressure ranges	3,4-275 bar (50-4000 psi)
Temperature range	-40° to 120°C (-40° to 248°F)
Cavity	C-12-2 or C-12-2U
Fluids	All general purpose hydraulic fluids such as: MIL-H-5606, SAE 10, SAE 20, etc.
Filtration	Cleanliness Code 18/**16/13**
Standard housing materials	Aluminum or Steel
Weight cartridge only	0,49 kg (1.08 lbs)
Seal kit	02-165881 (Buna-N) 02-165888 (Viton®)

Viton is a registered trademark of E.I. DuPont

Endurance tested to 1 million cycles at full rated flow and pressure.

Description

This is a direct acting, poppet style screw in cartridge relief valve ideal for low cost applications to limit the pressure in the system.

Pressure override curves

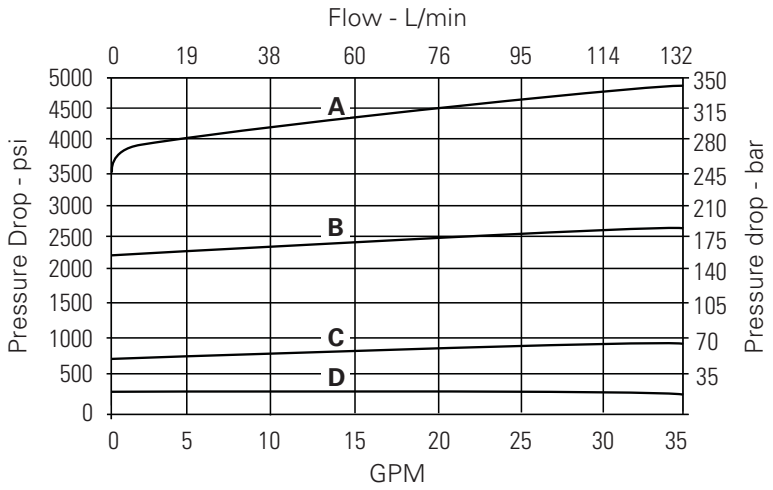

A - 40 spring
B - 22 spring
C - 8.5 spring
D - 2.5 spring

Where measurements are critical request certified drawings. We reserve the right to change specifications without notice.

RV1-12 - Relief valve

Poppet, direct acting
114 L/min (30 USgpm) • 350 bar (5000 psi)

Model code

RV1 – 12 (V) – X – (*) – * – (U) – **/ ** – **

1 2 3 4 5 6 7 8 9 10

1 Function

RV1 - Relief valve

2 Size

12 - 12 size

3 Seal material

Blank - Buna-N
V - Viton®

4 Adjustment

C - Cap
K - Knob
F - Factory set
S - Screw

5 Valve housing material

Omit for cartridge only
A - Aluminum
S - Steel

6 Port size

Code	Port size	Housing number			
		C-12-2 Aluminum fatigue rated	C-12-2U Aluminum fatigue rated	C-12-2 Steel fatigue rated	C-12-2U Steel fatigue rated
4G	1/2" BSPP	30189-1	30189-2	30915-1	30915-2
6G	1/4" BSPP	31090-1	31090-2	30916-1	30916-2
10T	SAE 10	31087-1	31087-2	30913-1	30913-2
12T	SAE 12	31088-1	31088-2	30914-1	30914-2

See section J for housing.

7 Cavity

Blank - Cavity without undercut
U - Cavity with undercut

8 Cracking pressure range

Note: Code based on pressure in psi.
2.5 - 3,4-17 bar (50-250 psi)
8.5 -13-55 bar (200-850 psi)
22 - 20-150 bar (300-2200 psi)
40 - 40-275 bar (600-4000 psi)

9 Setting pressure

Within ranges in 8
Blank - Normal factory setting at approximate mid-range.
Optional - User requested settings in 3,45 bar (50 psi) steps, Coded as in the following examples:
10 - 70 bar (1000 psi)
10.5 - 72,4 bar (1050 psi)

10 Special features

00 - None
(Only required if valve has special features, omitted if "00.")

Dimensions

mm (inch)

Cartridge only

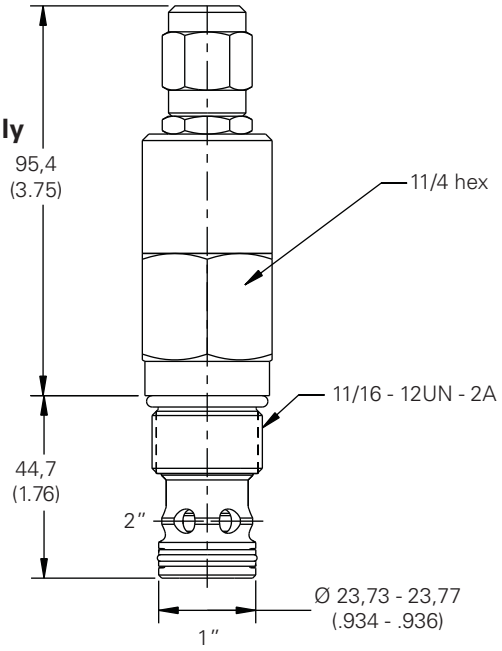

ADJUSTMENT CODE C

Torque cartridge in housing
A - 81-95 Nm (60-70 ft. lbs)
S - 102-115 Nm (75-85 ft. lbs)

Installation drawing (Steel)

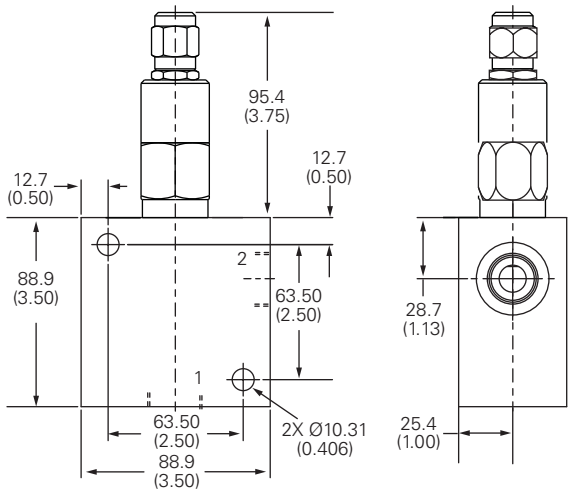

⚠ Warning

Aluminum housings can be used for pressures up to 210 bar (3000 psi). Steel housings must be used for operating pressures above 210 bar (3000 psi).

Where measurements are critical request certified drawings. We reserve the right to change specifications without notice.

E

RV5-10 - Relief valve

Spool, pilot operated
114 L/min (30 USgpm) • 350 bar (5000 psi)

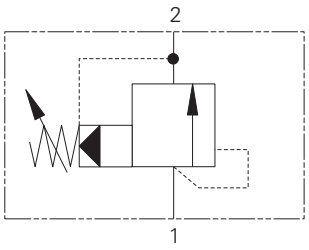

Operation

When the inlet pressure exceeds the setting of the valve, the pilot section opens, causing a small flow across the orifice in the main spool.

The subsequent pressure drop moves the spool against a light spring opening a ring of radial holes in the sleeve, allowing relief flow to tank.

Features

High accuracy of pilot operated design. Hardened working parts give long, reliable, trouble-free life. Cartridge construction for installation into your own manifold.

Sectional view

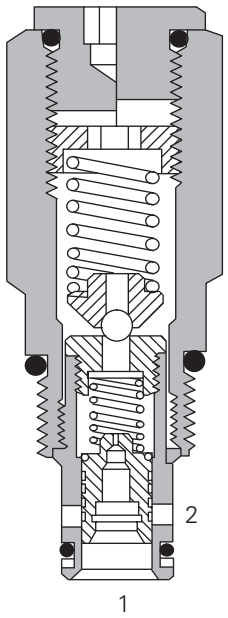

Performance data

Ratings and specifications

Performance data is typical with fluid at 21,8 cSt (105 SUS) and 49° C (120° F)	
Typical application pressure (all ports)	350 bar (5000 psi)
Cartridge fatigue pressure (infinite life)	350 bar (5000 psi)
Rated flow	114 L/min (30 USgpm)
Internal leakage, port 1 to port 2	114 cc/min (7cu in/min @ 350 bar (5000 psi)
Cavity	C-10–2
Standard housing materials	Aluminum or steel
Temperature range	-40° to 120°C (-40° to 248°F)
Fluids	All general purpose hydraulic fluids such as: MIL–H–5606, SAE 10, SAE 20, etc.
Filtration	Cleanliness Code 18/**16/13**
Weight cartridge only	0,22 kg (0.48 lbs)
Seal kits – RV5	565803 Buna–N 566086 Viton®
– RV5A	565806 Buna–N 889627 Viton®

Viton is a registered trademark of E.I. DuPont

Description

To limit pressure in a system. Good for continuous duty and accurate pressure control with constant or varying flows.

Pressure override curves

Cartridge only
Tank pressure = 0

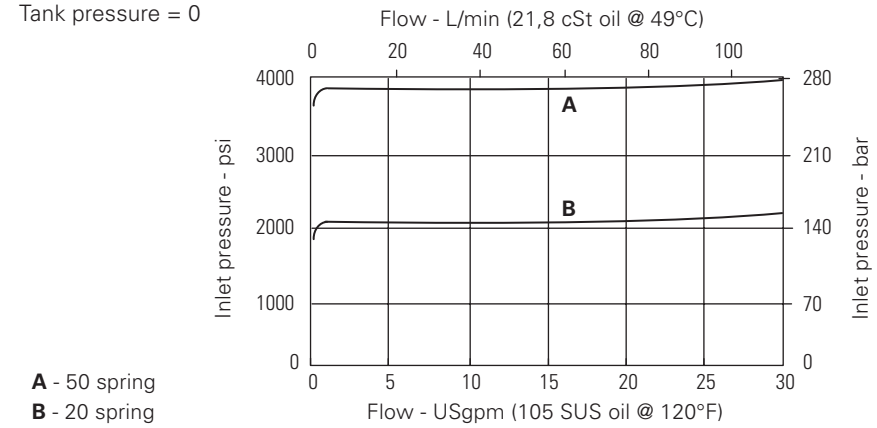

A - 50 spring
B - 20 spring

Where measurements are critical request certified drawings. We reserve the right to change specifications without notice.

RV5-10 - Relief valve

Spool, pilot operated
114 L/min (30 USgpm) • 350 bar (5000 psi)

Model code

RV5 A – 10 (V) – * – (S) – ** – **/ ** – 00

1 2 3 4 5 6 7 8 9 10

1 Function

RV5 - Relief valve

2 Cage seals

Blank - Single back-up ring as shown
A - 1/2 thickness back-up ring on each side of o-ring (for cross port relief applications)

3 Size

Blank - Buna-N

4 Seal material

Blank - Buna-N
V - Viton®

5 Adjustment

C - Cap
F - Factory set
I - Internal
K - Knob
S - Screw

6 Valve housing material

Blank - Aluminum
S - Steel

7 Port size

Code	Port size	Housing number		
		Aluminum light duty	Aluminum fatigue rated	Steel fatigue rated
0	Cartridge only			
3B	3/8" BSPP	02–175462	–	–
2G	1/4" BSPP	–	876702	02–175102
3G	3/8" BSPP	–	876703	02–175103
6H	SAE 6	–	876700	–
8H	SAE 8	–	876701	–
6T	SAE 6	566151	–	02–175100
8T	SAE 8	–	–	02–175101
H10H	SAE 10*	–	4997062-001	–
2K10H	SAE 10**	–	4997060-001	–

* Bolt on, dual cross over relief valve package for **Eaton H or T series motors**

** Bolt on, dual cross over relief valve package for **Eaton 2000 series motors**

(Note: Two cartridges are installed in this special housing, both are set to the same crack pressure specified in model Code position 9, maximum allowed setting is 210 bar (3000 psi), only available with RV5**A** option and aluminum housing.)

See section J for housing details.

8 Cracking pressure range

Note: Code based on pressure in psi.

3 - 3,4-20 bar (50-300 psi)
20 - 7-140 bar (100-2000 psi)
35 - 17-240 bar (250-3500 psi)
50 - 35-350 bar (500-5000 psi)

9 Setting pressure

Within ranges in 8

Blank - Normal factory setting at approximate mid-range. User requested settings in 3,45 bar (50 psi) steps, Coded as in the following examples:

10 - 70 bar (1000 psi)

10.5 - 72,4 bar (1050 psi)

10 Special features

00 - None
(Only required if valve has special features, omitted if "00.")

SS - 316 Stainless Steel external components

Dimensions

mm (inch)

Cartridge only

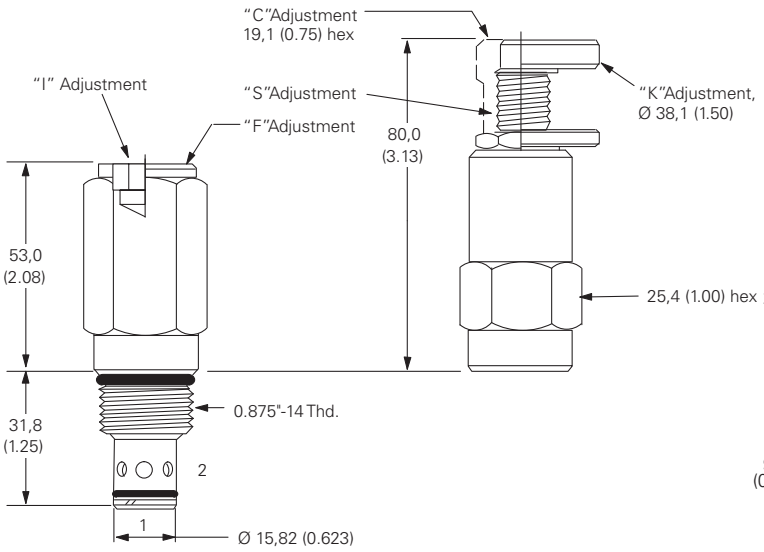

Torque cartridge in housing
A - 47-54 Nm (35-40 ft. lbs)
S - 68-75 Nm (50-55 ft. lbs)

Installation drawing (Steel)

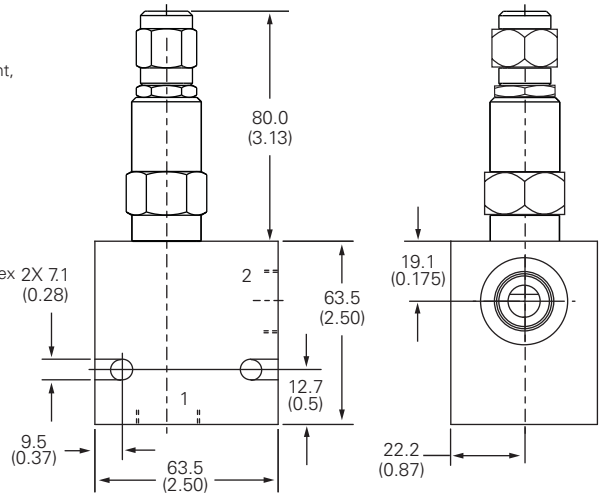

⚠ Warning

Aluminum housings can be used for pressures up to 210 bar (3000 psi). Steel housings must be used for operating pressures above 210 bar (3000 psi).

Where measurements are critical request certified drawings. We reserve the right to change specifications without notice.

E

RV11-12 - Relief valve

Spool, pilot operated
190 L/min (50 USgpm) • 350 bar (5000 psi)

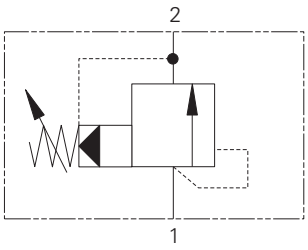

Operation

When the inlet pressure exceeds the setting of the valve, the pilot section opens, causing a small flow across the orifice in the main spool.

The subsequent pressure drop moves the spool against a light spring opening a ring of radial holes in the sleeve, allowing relief flow to tank.

Features

High accuracy of pilot operated design. Hardened working parts give long, reliable, trouble-free life. Cartridge construction for installation into your own manifold.

Sectional view

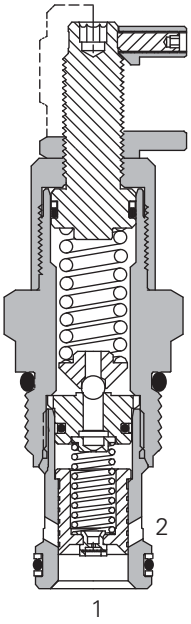

Performance data

Ratings and specifications

Performance data is typical with fluid at 21,8 cSt (105 SUS) and 49° C (120° F)	
Typical application pressure	350 bar (5000 psi)
Cartridge fatigue pressure (infinite life)	350 bar (5000 psi)
Rated flow	190 L/min (50 USgpm)
Reseat pressure	More than 90% of crack pressure
Hysteresis	Less than 3 bar (45 psi)
Internal leakage, port 1 to port 2	131 cc/min (8cu in/min@350 bar) (5000 psi)
Overshoot	Less than 20% of max. press. range with flow step of 30 USgpm at pressure rise rate of 100,000 psi/sec
Repeatability	+/- 1% maximum pressure range
Cavity	C–12–2 or C-12–2U
Standard housing materials	Aluminum or steel
Temperature range	-40° to 120°C (-40° to 248°F)
Fluids	All general purpose hydraulic fluids such as: MIL–H–5606, SAE 10, SAE 20, etc.
Filtration	Cleanliness Code 18/**16/13**
Weight cartridge only	0,3 kg (0.68 lbs)
Seal kits	02–165889 Buna–N 02–165888 Viton®

Viton is a registered trademark of E.I. DuPont

Description

To limit pressure in a system. Good for continuous duty and accurate pressure control with constant or varying flows.

Pressure override curves

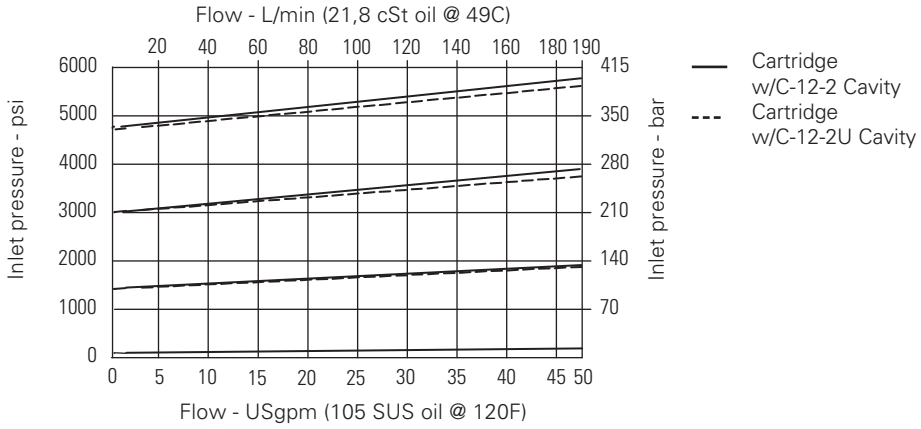

Where measurements are critical request certified drawings. We reserve the right to change specifications without notice.

RV11-12 - Relief valve

Spool, pilot operated
190 L/min (50 USgpm) • 350 bar (5000 psi)

Model code

RV11 – 12 (V) – * – (*) – * – **/ ** – 00**

1 2 3 4 5 6 7 8 9

1 Function
RV11 - Relief valve

2 Size
12 - 12 size

3 Seal material
Blank - Buna-N
V - Viton®

4 Adjustment
S - Screw
C - Cap
K - Knob

5 Valve housing material
A - Aluminum
S - Steel

6 Port size

Code	Port size	Housing number			
		C-12-2 Aluminum fatigue rated	C-12-2U Aluminum fatigue rated	C-12-2 Steel fatigue rated	C-12-2U Steel fatigue rated
0	Cartridge only				
10T	SAE 10	02-160640	02-160641	02-169744	02-169817
12T	SAE 12	02-160644	02-160645	02-169782	02-169790
4G	1/2" BSPP	02-161118	02-161116	02-172062	02-172512
6G	3/4" BSPP	02-161117	02-161115	02-169665	02-169922

See section J for housing.

7 Cracking pressure range
Note: Code based on pressure in psi.
15 - 10-100 bar (150-1500 psi)
30 - 17-210 bar (250-300 psi)
50*- 24-350 bar (350-5000 psi)
*Must be ordered as a cartridge only or with a steel housing.

8 Setting pressure
Within ranges in 7
Blank - Normal factory setting at approximate mid-range. User requested settings in 3,45 bar (50 psi) steps, Coded as in the following examples:
10 - 70 bar (1000 psi)
10.5 - 72,4 bar (1050 psi)

Torque cartridge in housing
A - 81-95 Nm (60-70 ft. lbs)
S - 102-115 Nm (75-85 ft. lbs)

9 Special features
00 - None
(Only required if valve has special features, omitted if "00.")

⚠ Warning
Aluminum housings can be used for pressures up to 210 bar (3000 psi). Steel housings must be used for operating pressures above 210 bar (3000 psi).

Dimensions
mm (inch)

Cartridge only

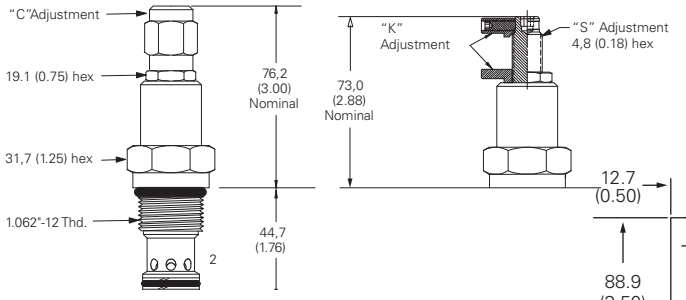

Installation drawing (Steel)

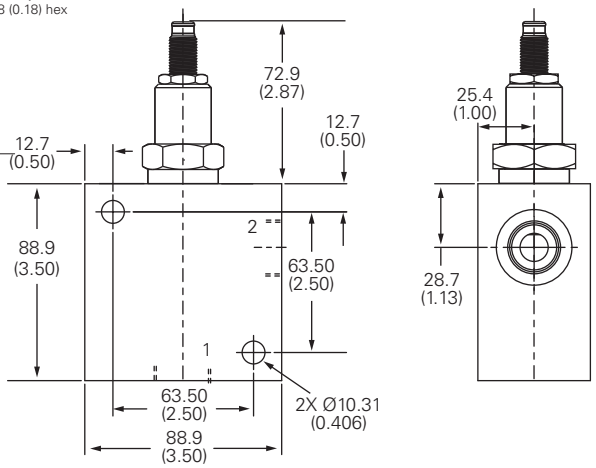

Where measurements are critical request certified drawings. We reserve the right to change specifications without notice.

E

1AR100 - Relief valve

Spool, pilot operated
150 L/min (40 USgpm) • 400 bar (5800 psi)

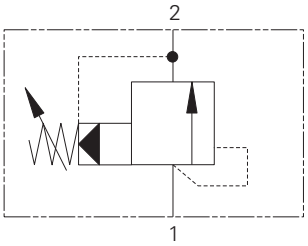

Operation

When the inlet pressure exceeds the setting of the valve, the pilot section opens, causing a small flow across the orifice in the main spool.

The subsequent pressure drop moves the spool against a light spring opening a ring of radial holes in the sleeve, allowing relief flow to tank.

Features

High accuracy of pilot operated design. Hardened working parts give long, reliable, trouble-free life. Cartridge construction for installation into your own manifold.

Sectional view

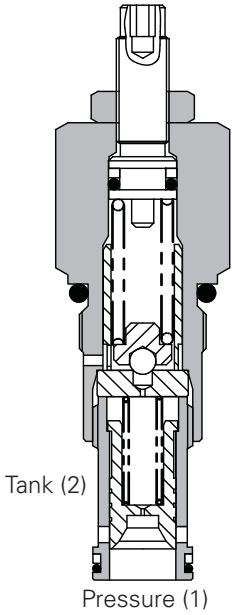

Description

To limit pressure in a system. Good for continuous duty and accurate pressure control with constant or varying flows.

Performance data

Ratings and specifications

Figures based on: Oil Temp = 40°C Viscosity = 32 cSt (150 SUS)	
Rated flow	150 L/min (40 USgpm)
Max setting1AR100	400 bar (5800 psi)
Cartridge material	Working parts hardened and ground steel. External surfaces zinc plated.
Body material	Standard aluminium (up to 210 bar*). Add suffix "377" for steel option.
Mounting position	Unrestricted
Cavity	A881 (See Section M)
Torque cartridge into cavity	60 Nm (44 lbs ft)
Weight1AR100 1AR150 1AR155	0.14 kg (0.3 lbs) 0.65 kg (1.4 lbs) 0.91 kg (2.0 lbs)
Seal kit	SK164 (Nitrile) SK164V (Viton®)
Recommended filtration level	BS5540/4 class 18/13 (25 micron nominal)
Operating temp	-30° to +90°C (-22° to +194°F)
Leakage	20 to 65 milliliters/min nominal
Nominal viscosity range	5 to 500 cSt

Viton is a registered trademark of E.I. DuPont

Pressure drop curves

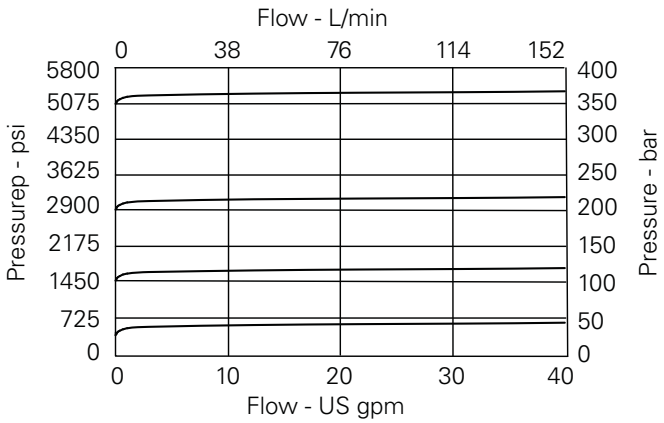

Where measurements are critical request certified drawings. We reserve the right to change specifications without notice.

1AR100 - Relief valve

Spool, pilot operated
150 L/min (40 USgpm) • 400 bar (5800 psi)

Model Code

1AR* P 3W– 40 S**

1 2 3 4 5

1 Function

1AR100 - Cartridge Only
1AR145 - Cartridge and Body
1AR150/1AR155
- Cartridge and Body Through ported

2 Adjustment means

P - Leakproof Screw Adjustment
R - Handknob Adjustment
G - Tamperproof Cap
(See page E-7 for dimensions)

3 Port size

Code	Port Size	Housing number - body only				
		Aluminium 1AR145	Aluminium 1AR150	Steel 1AR150	Aluminium 1AR155	Steel 1AR155
3W	3/8" BSP		C1084			
4W	1/2" BSP	B4851	C1044	C593		
6W	3/4" BSP	B3954	C1086	C4917		
8W	1" BSP				B1617	B4596
6T	3/8" SAE		B10784			
8T	1/2" SAE	B19403	C7140			
12T	3/4" SAE	B19404	B10506	B10742		
16T	1" SAE				B1037	B24040

4 Pressure range

Note: Code based on pressure in bar.

7 - 10-70 bar.
Std setting 35 bar
20 - 10-210 bar.
Std setting 100 bar
40 - 50-400 bar.
Std setting 280 bar

5 Se als

S - Nitrile (For use with most industrial hydraulic oils)
SV - Viton® (For high temperature and most special fluid applications)

Dimensions

mm (inch)

Cartridge only

Basic Code
1AR100

Note: For applications above

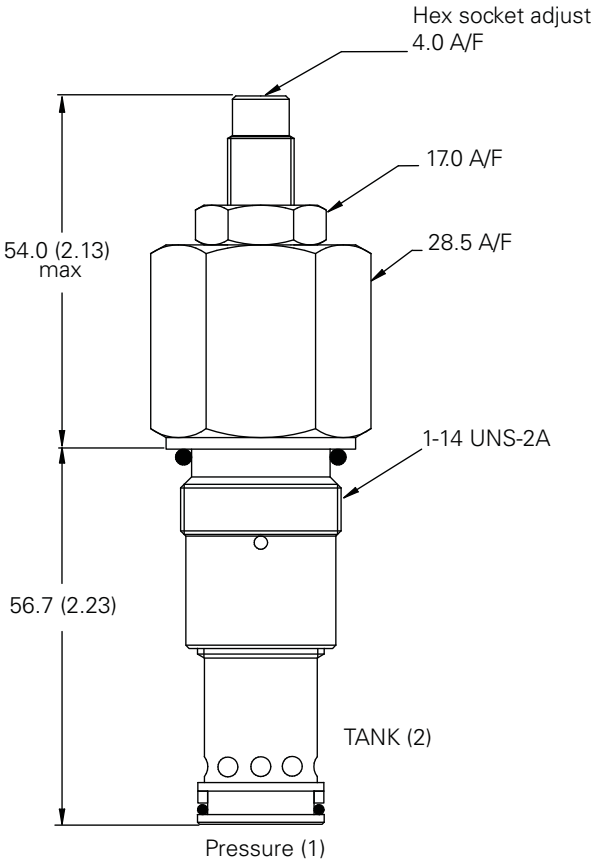

Complete valve

1/2", 3/4" Ports
Basic Code
1AR145

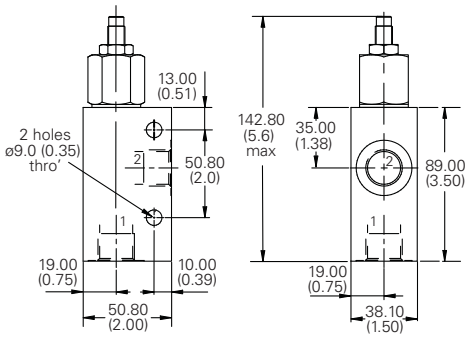

Complete valve

3/8", 1/2", 3/4" Ports
Basic Code
1AR150

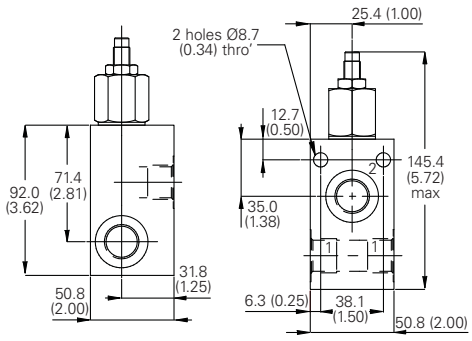

Complete valve

1" Ports
Basic Code
1AR155

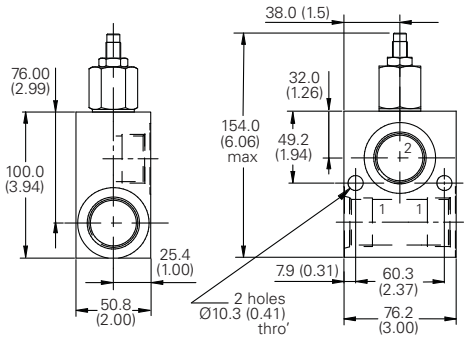

Where measurements are critical request certified drawings. We reserve the right to change specifications without notice.

E

RV5-16 - Relief valve

Spool, pilot operated
300 L/min (80 USgpm) • 350 bar (5000 psi)

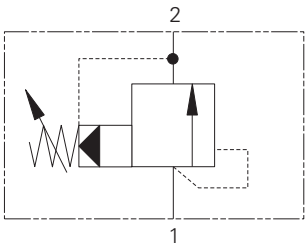

Operation

When the inlet pressure exceeds the setting of the valve, the pilot section opens, causing a small flow across the orifice in the main spool.

The subsequent pressure drop moves the spool against a light spring opening a ring of radial holes in the sleeve, allowing relief flow to tank.

Features

High accuracy of pilot operated design. Hardened working parts give long, reliable, trouble-free life. Cartridge construction for installation into your own manifold.

Sectional view

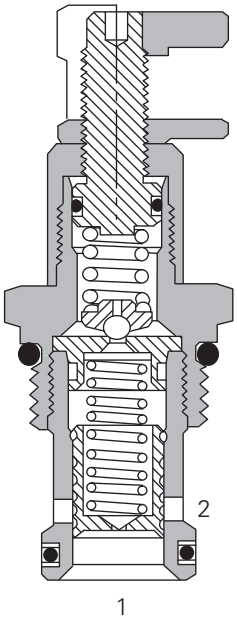

Performance data

Ratings and specifications

Performance data is typical with fluid at 21,8 cSt (105 SUS) and 49° C (120° F)	
Typical application pressure (all ports)	350 bar (5000 psi)
Cartridge fatigue pressure (infinite life)	350 bar (5000 psi)
Rated flow	300 L/min (80 USgpm)
Internal leakage, port 1 to port 2	164 cc/min (10cu in/min@350 bar (5000 psi)
Cavity	C-16–2
Standard housing materials	Aluminum or steel
Temperature range	-40° to 120°C (-40° to 248°F)
Fluids	All general purpose hydraulic fluids such as: MIL–H–5606, SAE 10, SAE 20, etc.
Filtration	Cleanliness Code 18/**16/13**
Weight cartridge only	0,71 kg (1.57 lbs)
Seal kits	889631 Buna–N 889635 Viton®

Viton is a registered trademark of E.I. DuPont

Description

To limit pressure in a system. Good for continuous duty and accurate pressure control with constant or varying flows.

Pressure override curves

Cartridge only

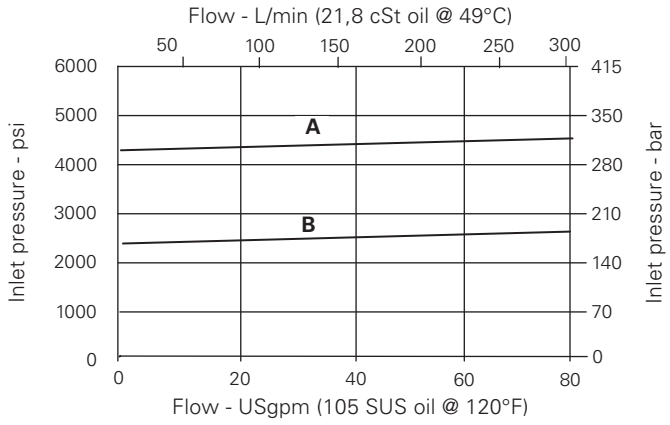

A - 60 spring
B - 35 spring

Where measurements are critical request certified drawings. We reserve the right to change specifications without notice.

RV5-16 - Relief valve

Spool, pilot operated
300 L/min (80 USgpm) • 350 bar (5000 psi)

Model Code

RV5 – 16 (V) – * – (S) – ** – **/ ** – 00

1 2 3 4 5 6 7 8 9

1 Function
RV5 - Relief valve

2 Size
16 - 16 size

3 Seal material
Blank - Buna-N
V - Viton®

4 Adjustment
S - Screw
C - Cap
K - Knob

5 Valve housing material
Blank - Aluminum
S - Steel

6 Port size

Code	Port size	Housing number		
		Aluminium light duty	Aluminium fatigue rated	Steel fatigue rated
0	Cartridge only			
6B	3/4" BSPP	02–175463	–	–
4G	1/2" BSPP	–	876716	02–175106
6G	3/4" BSPP	–	876718	02–175107
10H	SAE 10	–	876717	–
12H	SAE 12	–	866113	–
10T	SAE 10	–	–	02–175104
12T	SAE 12	566149	–	02–175105

See section J for housing.

7 Cracking pressure range
Note: Code based on pressure in psi.
30 - 34-210 bar (500-3000 psi)
60 - 70-415 bar (1000-6000 psi)

8 Setting pressure
Within ranges in **7**
Blank - Normal factory setting at approximate mid-range. User requested settings in 3,45 bar (50 psi) steps, Coded as in the following examples:
10 - 70 bar (1000 psi)
10.5 - 72,4 bar (1050 psi)

Torque cartridge in housing
A - 108-122 Nm (80-90 ft. lbs)
S - 136-149 Nm (100-110 ft. lbs)

9 Special features
00 - None
(Only required if valve has special features, omitted if "00.")

⚠ Warning
Aluminum housings can be used for pressures up to 210 bar (3000 psi). Steel housings must be used for operating pressures above 210 bar (3000 psi).

Dimensions
mm (inch)

Cartridge only

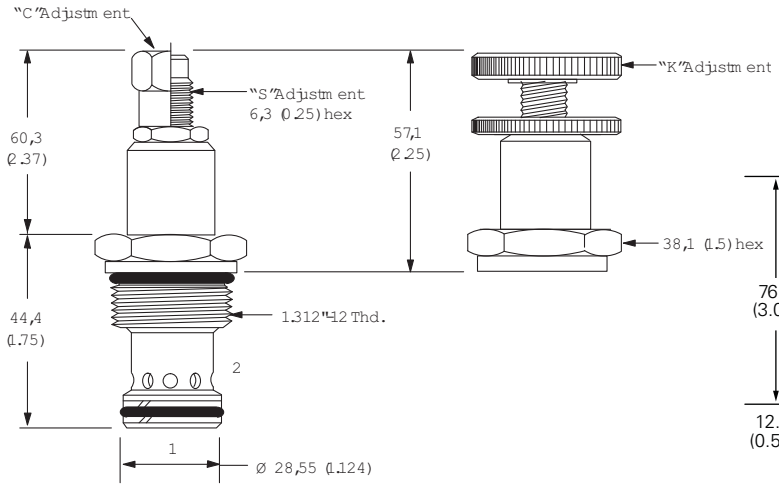

Installation drawing (Steel)

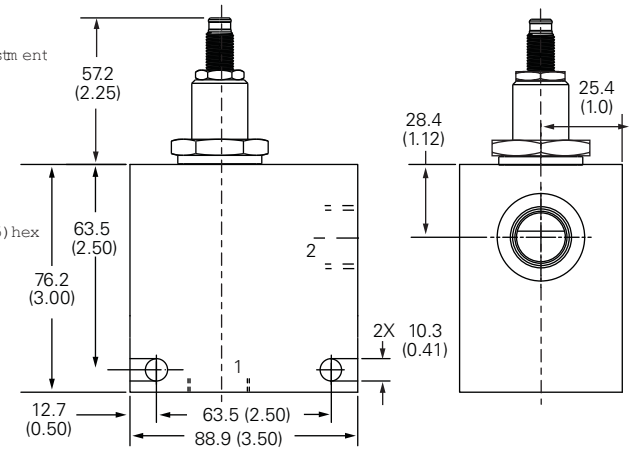

Where measurements are critical request certified drawings. We reserve the right to change specifications without notice.

E

1ARD100 - Shockless relief valve

Pilot relief valve
100 L/min (26 USgpm) • 210 bar (3000 psi)

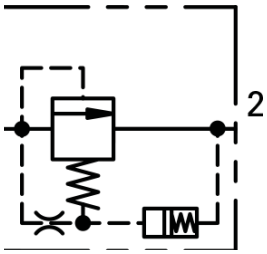

Operation

System pressure acts on the pilot section of the valve. When the setting is reached the pilot section opens and pilot flow is passed through the centre of the dampening piston and through an orifice to tank. The flow through the orifice causes the dampening piston to compress the main spring to increase the setting. The rate of movement of the dampening piston is determined by the size of the orifice and the level of dampening by the distance moved by the dampening piston.

The amount of dampening can be adjusted by the adjust screw that changes the stroke of the dampening piston. Adjusting the valve clockwise reduces the amount of dampening.

Features

High accuracy of the pilot operated design and flexibility of the adjustable dampening. Hardened working parts give long, reliable trouble free life. Cartridge construction allows for mounting into or onto the actuator where it can be most effective.

Sectional view

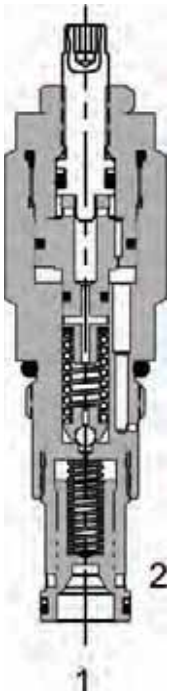

Performance data

Ratings and specifications

Figures based on: Oil Temp = 40°C Viscosity = 32 cSt (150 SUS)	
Rated flow	100 L/min (26 USgpm)
Max relief setting	210 bar (3000 psi)
Response time at max dampening	0.12 secs at max flow
Cartridge material	Working parts hardened and ground steel. External steel surfaces zinc plated.
Mounting position	Unrestricted
Cavity number	A881
Torque cartridge into cavity	60 Nm (44 ft lbs)
Weight	0.41 kg (0.9 lbs)
Seal kit number	SK 1412 Buna N / SK1412V Viton®
Recomended filtration level	BS5540/4 Class 18/13 (25 micron nominal)
Operating temperature	-30° to +90°C (-22° - +194°F)
Leakage	100 millilitres/min nominal
Nominal viscosity range	5-500 cSt

Viton is a registered trademark of E.I. DuPont

Typical max dampening performance curve

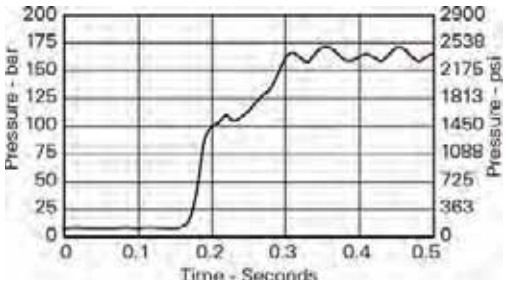

Pressure drop curve

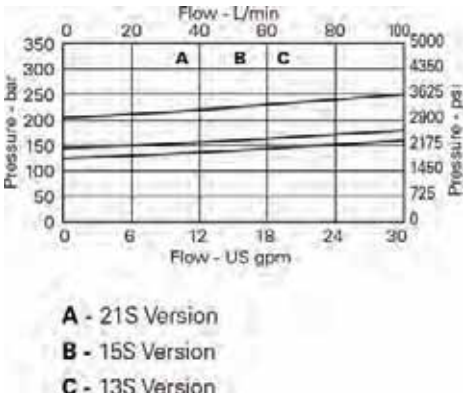

Description

The 1ARD100 is designed to remove pressure spikes in a system by providing dampening on initial opening. The level of dampening is adjustable but the setting is fixed with increments of 10 bar with a tollerance of +/- 10 bar. This valve is ideal for use on rotating machinery where pressure spikes may be evident on start up or reversing.

Where measurements are critical request certified drawings. We reserve the right to change specifications without notice.

1ARD100 - Shockless relief valve

Pilot relief valve
100 L/min (26 USgpm) • 210 bar (3000 psi)

Model code

1ARD100 N 4W – 20 S

1 2 3 4 5

1 Function

1ARD100 - Cartridge Only

2 Adjustment means

N - Fixed

For fixed versions add setting in 10 bar increments to end of part number +/- 10 bar tollerance

3 Port size

Code	Port size	Housing number	
		Aluminium	Steel
3W	3/8"BSPP	C1084	
4W	1/2"BSPP	C1044	C593
6W	3/4"BSPP	C1086	C4917
6T	SAE 6	B10784	
8T	SAE 8	C7140	
12T	SAE 12	B10506	B10742

4 Pressure range

20 - 50-210 bar.
(725 - 3000psi)

Setting fixed 10 bar increments with +/- 10 bar tollerance at 10 lts/min

5 Seals

S - Buna N (For use with most industrial hydraulic fluids)

SV - Viton® (For high temperature and most fluid applications)

Dimensions

mm (inch)

Cartridge only

Basic Code
1ARD100

⚠ Warning

Aluminium housings can be used for 210 bar (3000 psi) Steel housings must be used for operating pressure above 210 bar (3000 psi).

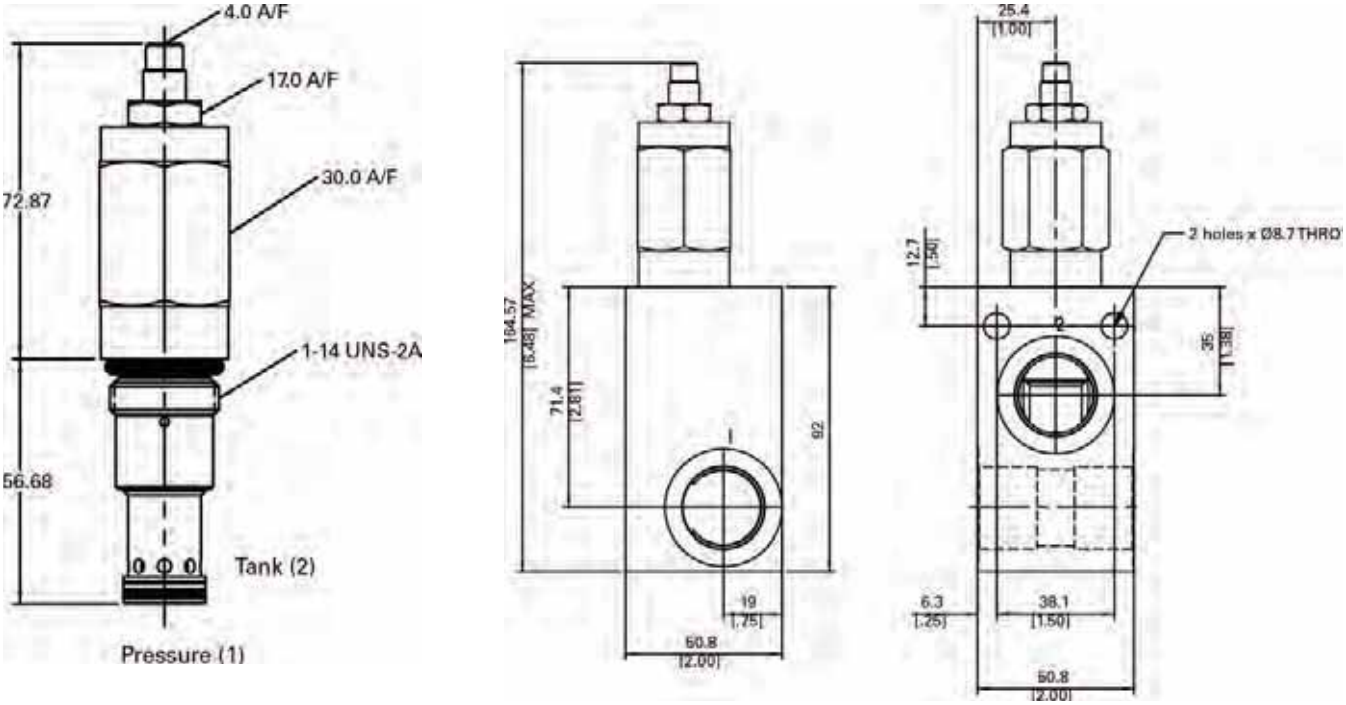

Where measurements are critical request certified drawings. We reserve the right to change specifications without notice.

RV4-10 - Relief valve

Poppet, thermal relief with reverse flow check
1 L/min (0.25 USgpm) relief/45 L/min (12 USgpm) check • 350 bar (5000 psi)

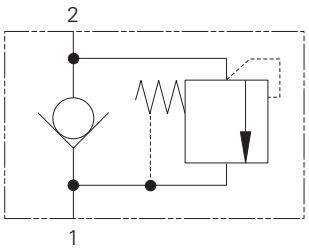

Operation

As a check valve the valve remains closed until the pressure at port 1 exceeds the 1.24 bar (18 psi) cracking pressure. The valve will hold pressure in port 2 until the setting of the thermal relief is reached.

Flow will then take place from port 2 to 1. This flow should be limited to that produced due to the thermal expansion of the oil in port 2.

Features

Very low leakage from port 1 to 2. Hardened and ground working parts. Good re-seat. Compact solution in a single cartridge.

Sectional view

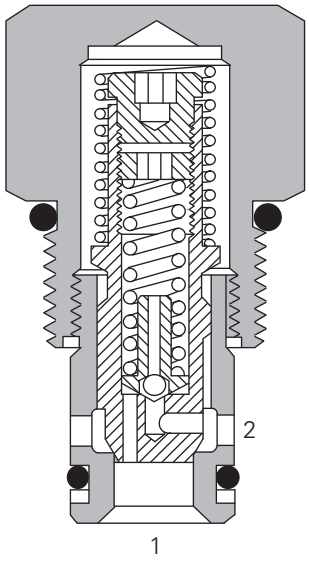

Performance data

Ratings and specifications

Performance data is typical with fluid at 21,8 cSt (105 SUS) and 49° C (120° F)	
Typical application pressure (all ports)	350 bar (5000 psi)
Rated flow – check valve – relief valve	45 L/min (12 USgpm) 1 L/min (0.25 USgpm)
Relief cracking pressure ranges	28 - 350 bar (400 - 5000 psi)
Check valve cracking pressure	1,24 bar (18 psi)
Reseat pressure	More than 90% of cracking pressure
Internal leakage, port 2 to port 1	0.3 mL/min (5 drops/min) at cracking pressure
Cavity	C-10–2
Standard housing materials	Aluminum or steel
Temperature range	-40° to 120°C (-40° to 248°F)
Fluids	All general purpose hydraulic fluids such as: MIL–H–5606, SAE 10, SAE 20, etc.
Filtration	Cleanliness Code 18/**16/13**
Weight cartridge only	0,11 kg (0.25 lbs)
Seal kits	565803 Buna–N 566086 Viton®

Viton is a registered trademark of E.I. DuPont

Description

This is a check valve with a built in thermal relief. It is ideal for protecting actuators from damage when ambient temperatures cause the locked in oil pressure to increase. The thermal relief is limited to 4 L/min (1 USgpm) and should not be over-flowed.

Pressure override & free flow curves

Cartridge only

Thermal Relief (port 2-port 1)
Flow L/min (21,8 cSt oil @ 49°C)

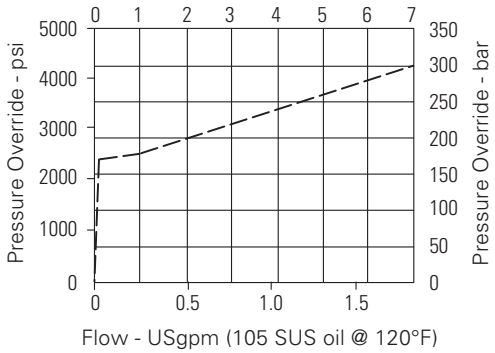

Free Flow (port 1-port 2)
Flow L/min (21,8 cSt oil @ 49°C)

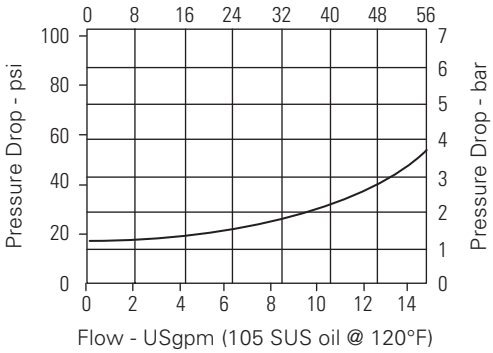

Where measurements are critical request certified drawings. We reserve the right to change specifications without notice.

RV4-10 - Relief valve

Poppet, thermal relief with reverse flow check
1 L/min (0.25 USgpm) relief/45 L/min (12 USgpm) check • 350 bar (5000 psi)

Model code

RV4 – 10 (V) – F – (S) – ** – 50/ ** – 00

1 2 3 4 5 6 7 8 9

1 Function

RV - Check valve with thermal relief

2 Size

10 - 10 size

3 Seal material

Blank - Buna-N
V - Viton®

4 Adjustment

F - Factory Set

5 Valve housing material

Blank - Aluminum
S - Steel

6 Port size

Code	Port size	Housing number		
		Aluminum light duty	Aluminum fatigue rated	Steel fatigue rated
0	Cartridge only			
3B	3/8" BSPP	02–175462	–	–
2G	1/4" BSPP	–	876702	02–175102
3G	3/8" BSPP	–	876703	02–175103
6H	SAE 6	–	876700	–
8H	SAE 8	–	876701	–
6T	SAE 6	566151	–	02–175100
8T	SAE 8	–	–	02–175101

See section J for housing.

7 Cracking pressure range

Note: Code based on pressure in psi.
50 - 28-350 bar (400-5000 psi)

8 Setting pressure

Within ranges in 7

User must specify settings in 7 bar (100 psi) steps, Coded as in the following examples:

10 - 70 bar (1000 psi)

25 - 175 bar (2500 psi)

9 Special features

00 - None
(Only required if valve has special features, omitted if "00.")

Dimensions

mm (inch)

Torque cartridge in housing
A - 47-54 Nm (35-40 ft. lbs)
S - 68-75 Nm (50-55 ft. lbs)

Cartridge only

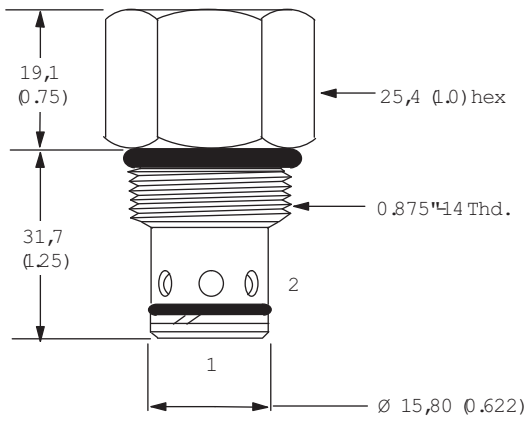

Installation drawing (Steel)

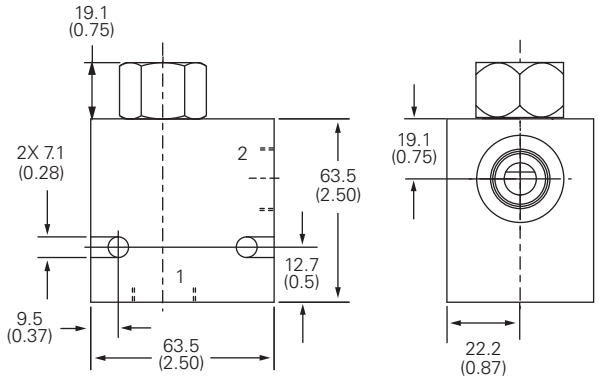

⚠ Warning

Aluminum housings can be used for pressures up to 210 bar (3000 psi). Steel housings must be used for operating pressures above 210 bar (3000 psi).

Where measurements are critical request certified drawings. We reserve the right to change specifications without notice.

E

RV2-10 - Relief valve

Poppet, pilot operated with reverse flow check
12-114 L/min (3-30 USgpm) • 350 bar (5000 psi)

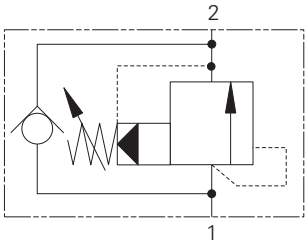

Operation

When the inlet reaches the valve setting, the pilot section opens, causing a small flow across the orifice in the poppet.

The subsequent pressure drop moves the poppet, opening the valve, allowing relief flow to tank.

Features

Very low pressure rise for any increase in flow giving accurate pressure control. Hardened working parts give long, reliable, trouble-free life. Cartridge construction giving maximum flexibility in mounting.

Sectional view

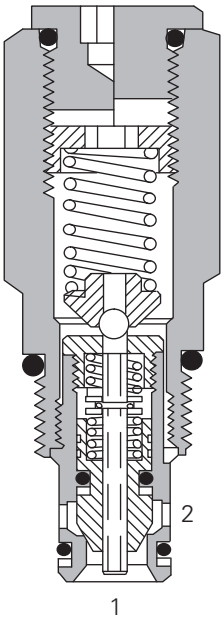

Performance data

Ratings and specifications

Performance data is typical with fluid at 21,8 cSt (105 SUS) and 49° C (120° F)	
Typical application pressure (all ports)	350 bar (5000 psi)
Cartridge fatigue pressure (infinite life)	350 bar (5000 psi)
Rated flow range	12–114 L/min (3–30 USgpm)
Internal leakage	0.3 mL/min (5 drops/min) @ 85% of Pressure Setting
Reverse free flow check	3 bar (45 psi)
Cavity	C-10–2
Standard housing materials	Aluminum or steel
Temperature range	-40° to 120°C (-40° to 248°F)
Fluids	All general purpose hydraulic fluids such as: MIL–H–5606, SAE 10, SAE 20, etc.
Filtration	Cleanliness Code 18/**16/13**
Weight cartridge only	0,22 kg (0.48 lbs)
Seal kits	565803 Buna–N 566086 Viton®

Viton is a registered trademark of E.I. DuPont

Description

This is a pilot operated relief valve with an integral free flow check designed to limit pressure in a system. Good for continuous duty and accurate pressure control with constant or varying flows With integral reverse flow check.

Pressure override curves

Cartridge only
Tank pressure = 0

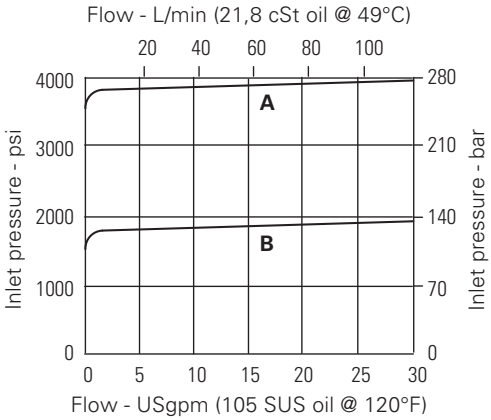

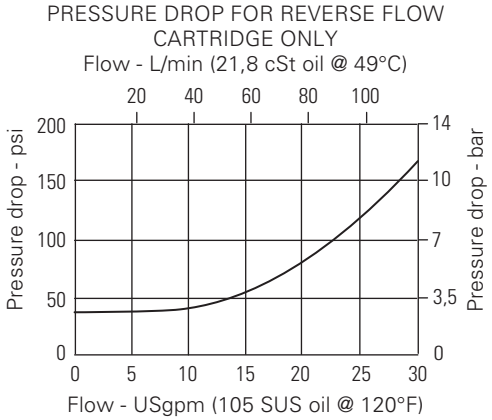

A - 50 Spring
B - 20 Spring

Where measurements are critical request certified drawings. We reserve the right to change specifications without notice.

RV2-10 - Relief valve

Poppet, pilot operated with reverse flow check
12-114 L/min (3-30 USgpm) • 350 bar (5000 psi)

Model code

RV2 – 10 (V) – * – (*) – ** – **/ ** – 00

1 2 3 4 5 6 7 8 9

1 Function

RV2- Relief valve

2 Size

10 - 10 size

3 Seal material

Blank - Buna-N
V - Viton®

4 Adjustment

C - Cap
F - Factory set
I - Internal
K - Knob
S - Screw

5 Valve housing material

Blank - Aluminum
S - Steel

6 Port size

Code	Port size	Housing number		
		Aluminum light duty	Aluminum fatigue rated	Steel fatigue rated
0	Cartridge only			
3B	3/8" BSPP	02–175462	–	–
2G	1/4" BSPP	–	876702	02–175102
3G	3/8" BSPP	–	876703	02–175103
6H	SAE 6	–	876700	–
8H	SAE 8	–	876701	–
6T	SAE 6	566151	–	02–175100
8T	SAE 8	–	–	02–175101

See section J for housing.

7 Cracking pressure range

Note: Code based on pressure in psi.
3 - 3,5-20 bar (50-300 psi)
20 - 7-140 bar (100-2000 psi)
35 - 17-240 bar (250-3500 psi)
50 - 35-350 bar (500-5000 psi)

8 Setting pressure

Within ranges in 7
Blank - Normal factory setting at approximate mid-range. User requested settings in 3,45 bar (50 psi) steps, Coded as in the following examples:
10 - 70 bar (1000 psi)
10.5 - 72,4 bar (1050 psi)

Torque cartridge in housing
A - 47-54 Nm (35-40 ft. lbs)
S - 68-75 Nm (50-55 ft. lbs)

9 Special features

00 - None
(Only required if valve has special features, omitted if "00.")
SS - 316 Stainless Steel external components

⚠ Warning

Aluminum housings can be used for pressures up to 210 bar (3000 psi). Steel housings must be used for operating pressures above 210 bar (3000 psi).

Dimensions

mm (inch)

Cartridge only

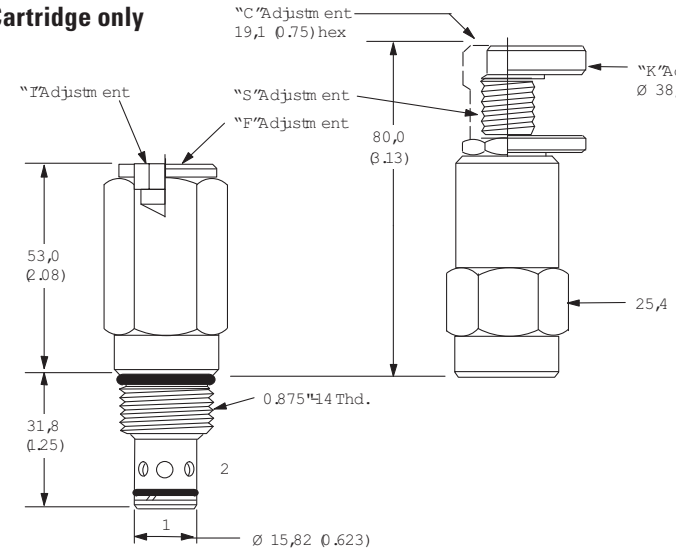

Installation drawing (Steel)

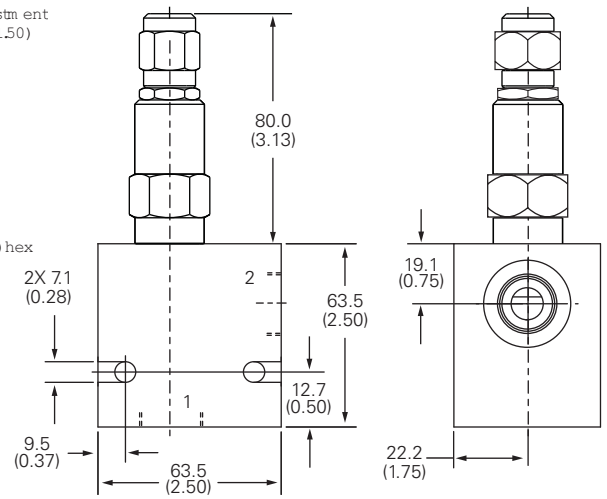

Where measurements are critical request certified drawings. We reserve the right to change specifications without notice.

E

1ARC100 - Relief valve

Spool, pilot operated with reverse flow check
150 L/min (40 USgpm) • 400 bar (5800 psi)

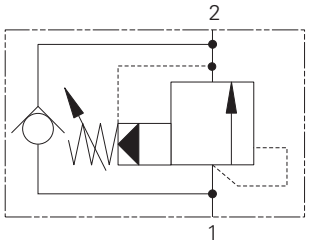

Operation

When the inlet reaches the valve setting, the pilot section opens, causing a small flow across the orifice in the spool.

The subsequent pressure drop moves the spool, opening a ring of radial holes in the sleeve, allowing relief flow to tank.

Features

Very low pressure rise for any increase in flow giving accurate pressure control. Hardened working parts give long, reliable, trouble-free life. Cartridge construction giving maximum flexibility in mounting.

Sectional view

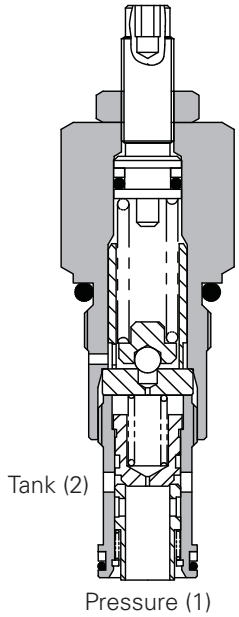

Performance data

Ratings and specifications

Performance data is typical with fluid at 32 cST (150 SUS)		
Rated flow		150 L/min (40 USgpm)
Max setting		400 bar (5800 psi)
Cartridge material		Working parts hardened and ground steel. External surfaces zinc plated.
Body material		Standard aluminium (up to 210 bar*). Add suffix "377" for steel option.
Mounting position		Unrestricted
Cavity		A881 (See Section M)
Torque cartridge into cavity		60 Nm (44 lbs ft)
Weight	1ARC100 1ARC145 1ARC150 1ARC155	0.14 kg (0.3 lbs) 0.54 kg (1.2 lbs) 0.65 kg (1.4 lbs) 0.91 kg (2.0 lbs)
Seal kit		SK164 (Nitrile) SK164V (Viton®)
Recommended filtration level		BS5540/4 Class 18/13 (25 micron nominal)
Operating temp		-30°C to +90°C (-22° to +194°F)
Leakage		125 milliliters/min @ 280 bar
Nominal viscosity range		5 to 500 cSt

Viton is a registered trademark of E.I. DuPont

Description

This is a pilot operated relief valve with an integral free flow check designed to limit pressure in a system. Good for continuous duty and accurate pressure control with constant or varying flows With integral reverse flow check.

Pressure drop curves

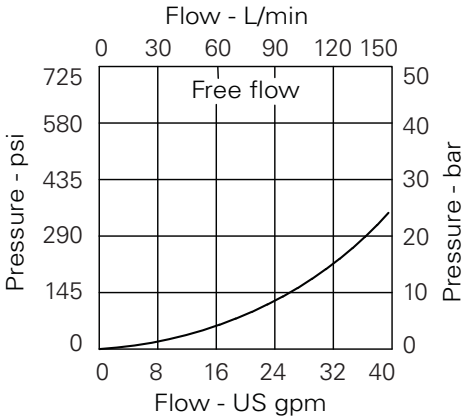

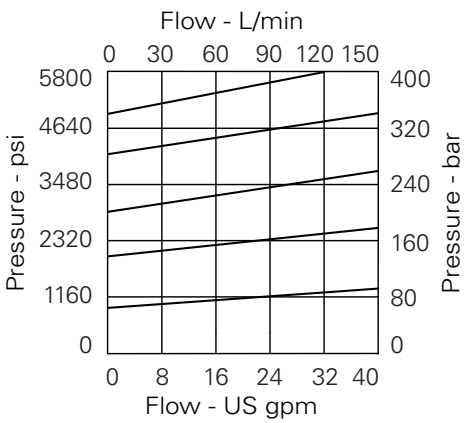

Where measurements are critical request certified drawings. We reserve the right to change specifications without notice.

1ARC100 - Relief valve

Spool, pilot operated with reverse flow check
150 L/min (40 USgpm) • 400 bar (5800 psi)

Model code

1ARC* – P 3W – 40 S**

1 2 3 4 5

1 Function

1ARC100 - Cartridge Only
1ARC145 - Cartridge and Body
1ARC150/1ARC155
- Cartridge and Body Through ported

2 Adjustment means

P - Leakproof Screw Adjustment
R - Handknob Adjustment
G - Tamperproof Cap
(See page E-7 for dimensions)

3 Port size

Code	Port size	Housing number - body only				
		Aluminium 1AR145	Aluminium 1AR150	Steel 1AR150	Aluminium 1AR155	Steel 1AR155
3W	3/8" BSP		C1084			
4W	1/2" BSP	B4851	C1044	C593		
6W	3/4" BSP	B3954	C1086	C4917		
8W	1" BSP				B1617	B4596
6T	3/8" SAE		B10784			
8T	1/2" SAE	B19403	C7140			
12T	3/4" SAE	B19404	B10506	B10742		
16T	1" SAE				B1037	B24040

4 Pressure range

Note: Code based on pressure in bar.
7 - 10-70 bar.
Std setting 35 bar
20 - 10-210 bar.
Std setting 100 bar
40 - 50-400 bar.
Std setting 280 bar Std setting made at 14 L/min

5 Seals

S - Nitrile (For use with most industrial hydraulic oils)

SV - Viton (For high temperature and most special fluid applications)

Dimensions

mm (inch)

Cartridge only

Basic Code
1ARC100

Note: For applications above 210 bar, please consult our technical department or use the steel body option.

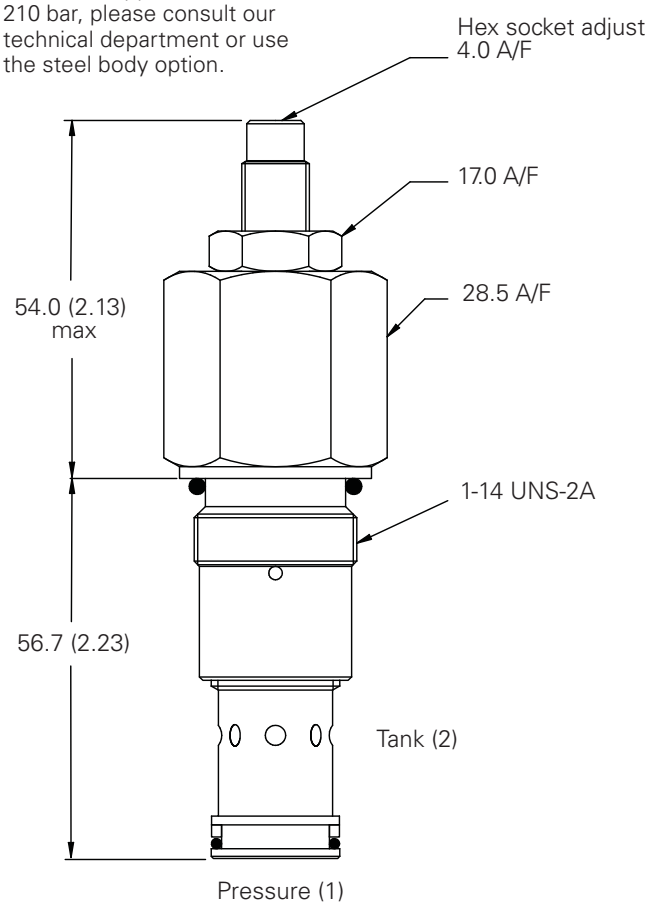

Complete valve

1/2", 3/4" Ports
Basic Code
1ARC145

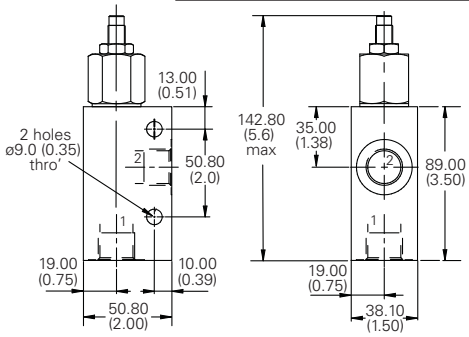

Complete valve

3/8", 1/2", 3/4" Ports
Basic Code
1ARC150

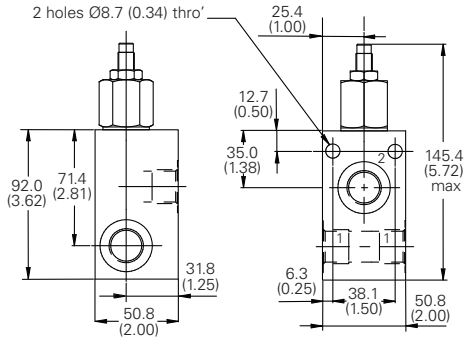

Complete valve

1" Ports
Basic Code
1ARC155

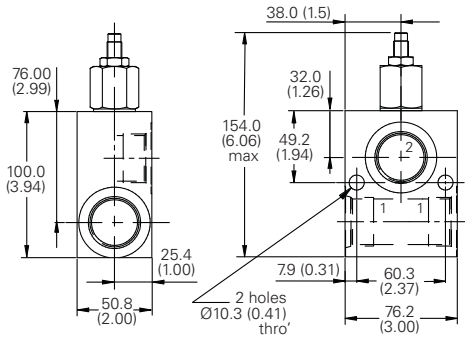

Where measurements are critical request certified drawings. We reserve the right to change specifications without notice.

E

RV8-8 - Relief valve

Poppet, differential area
30 L/min (8 USgpm) • 350 bar (5000 psi)

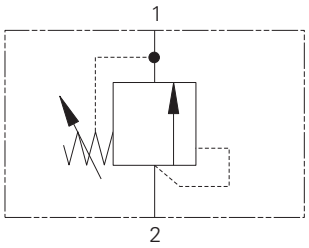

Operation

The RV8-8 remains closed until the predetermined setting is reached at port 2.

The force created by the pressure acting on the differential poppet area lifts the poppet off the seat and allows flow from port 2 to port 1.

Features

Hardened and ground working parts. Low leakage poppet design. High flow rate for a compact cartridge.

Sectional view

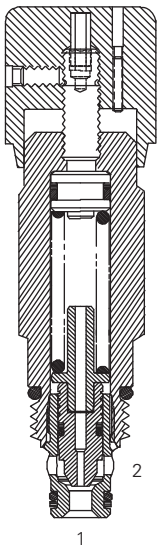

Description

The RV8-8 is a direct acting differential area, poppet type, screw-in cartridge relief valve.

Performance data

Ratings and specifications

Performance data is typical with fluid at 21,8 cST (105 SUS) and 49°C (120°F)	
Typical application pressure (all ports)	350 bar (5000 psi)
Cartridge fatigue pressure (infinite life)	280 bar (4000 psi)
Rated flow	30 L/min (8 USgpm)
Cracking pressure ranges	15: 3,4-100 bar (50-1500 psi) 30: 70-210 bar (1000-3000 psi) 50: 70-350 bar (1000-5000 psi)
Internal leakage, port 2 to port 1	Less than 5 drops/min @ 80% of cracking pressure
Temperature range	-40° to 120°C (-40° to 248°F)
Cavity	C-8-2
Fluids	All general purpose hydraulic fluids such as: MIL-H-5606, SAE 10, SAE 20 etc.
Filtration	Cleanliness code 18/**16/13**
Housing material (standard)	Aluminum or steel
Weight including coil	0,20 kg (0.43 lbs)
Seal kit	02-165874 (Buna-N), 02-165877 (Viton®)

Viton is a registered trademark of E.I. DuPont

Pressure drop

Cartridge only

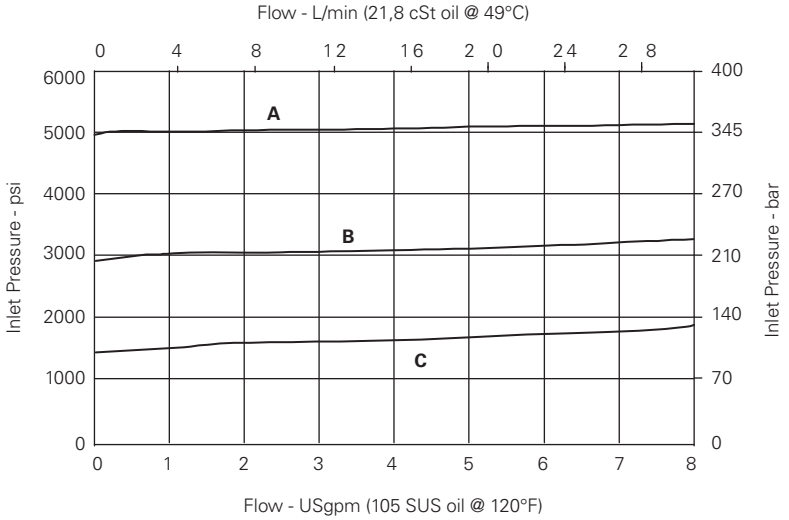

A - 50 spring
B - 30 spring
C - 15 spring

Where measurements are critical request certified drawings. We reserve the right to change specifications without notice.

RV8-8 - Relief valve

Poppet, differential area
30 L/min (8 USgpm) • 350 bar (5000 psi)

Model code

RV8 – 8 (V) – * – (*) – ** – ** / ** – 00

1 2 3 4 5 6 7 8 9

1 Function

RV8- Relief valve

2 Size

8 - 8 size

3 Seal material

Blank - Buna-N
V - Viton®

4 Adjustment

C - Cap
K - Knob
S - Screw

5 Valve housing material

Omit for cartridge only
S - Steel
A - Aluminum

For valve dimensions with manual override option installed see page A-980.

6 Port size

Code	Port size	Housing number	
		Aluminum Fatigue rated	Steel Fatigue rated
0	Cartridge only		
4T	SAE 4	02-160730	02-160736
6T	SAE 6	02-160731	02-160737
8T	SAE 8	02-160732	02-160738
2G	1/4" BSPP	02-160727	02-160733
3G	3/8" BSPP	02-160728	02-160734

*Light duty housing.
See section J for housing details.

7 Cracking pressure ranges

15 - 3,4-100 bar (50-1500 psi)
30 - 70-210 bar (1000-3000 psi)
50 - 70-350 bar (1000-5000 psi)

8 Pressure setting

Optional - Specify in 100 psi increments. If not specified, set at:

15 - 52 bar (750 psi)
30 - 100 bar (1500 psi)
50 - 175 bar (25000 psi)

9 Special features

00 - None
(Only required if valve has special features, omitted if "00.")
Note: Use J series, 23 W coils with this solenoid valve.

Dimensions

mm (inch)

Torque cartridge in aluminum or steel housing 34-41 Nm (25-30 ft lbs)

Cartridge only

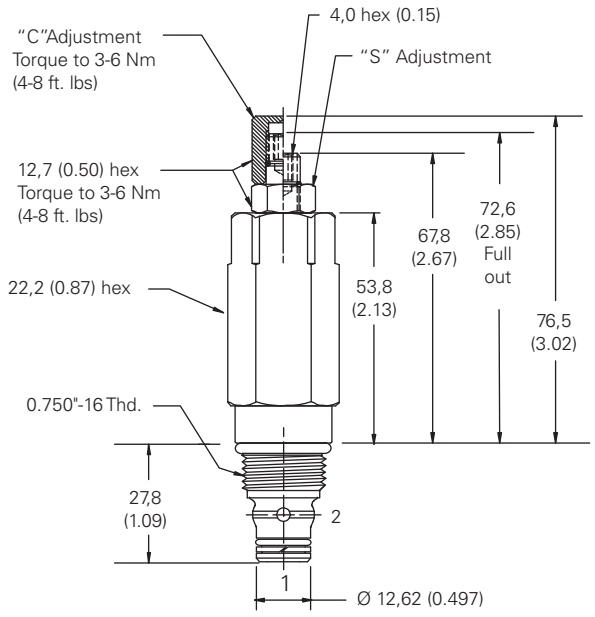

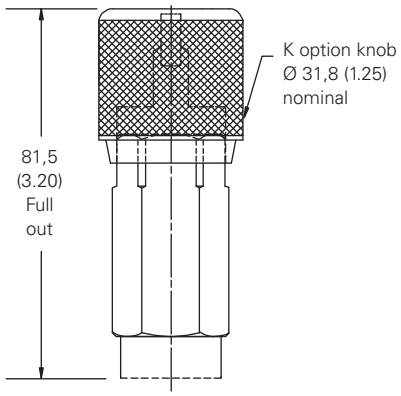

⚠ Warning

Aluminum housings can be used for pressures up to 210 bar (3000 psi). Steel housings must be used for operating pressures above 210 bar (3000 psi).

⚠ Warning

Maintain 5-8 Nm (4-6 ft lbs) maximum torque on valve tube nut. Over tightening may cause valve failure.

Where measurements are critical request certified drawings. We reserve the right to change specifications without notice.

RV3-10 - Relief valve

Poppet, direct acting, differential area
76 L/min (20 USgpm) • 250 bar (3600 psi)

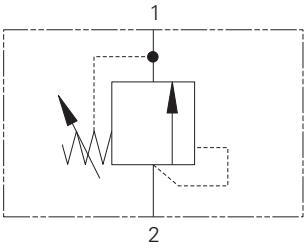

Operation

This valve remains closed from port 2 to 1 until the predetermined setting has been reached at port 2.

The pressure acts on the differential area between the seat and the seal diameter on the poppet.

Features

Hardened and ground working parts. Low leakage poppet design. High flow rate for a compact cartridge.

Sectional view

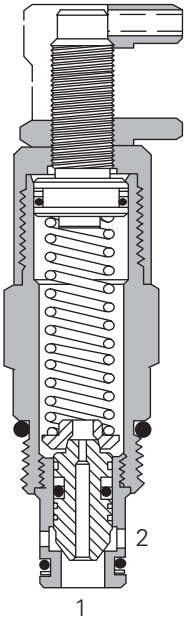

Description

This is a fast, direct acting differential area screw-in cartridge relief valve. The valve is ideal for the protection against shock pressures that can damage actuators.

Performance data

Ratings and specifications

Performance data is typical with fluid at 21,8 cSt (105 SUS) and 49° C (120° F)	
Typical application pressure (all ports)	250 bar (3600 psi)
Cartridge fatigue pressure (infinite life)	210 bar (3000 psi)
Rated flow	76 L/min (20 USgpm)
Internal leakage	0.3 mL/min (5 drops/min) @ 85% of Pressure Setting
Cavity	C-10–2
Standard housing materials	Aluminum or steel
Temperature range	-40° to 120°C (-40° to 248°F)
Fluids	All general purpose hydraulic fluids such as: MIL–H–5606, SAE 10, SAE 20, etc.
Filtration	Cleanliness Code 18/**16/13**
Weight cartridge only	0,22 kg. (0.48 lbs.)
Seal kits – RV3	565803 Buna–N 566086 Viton®
– RV3A (with double backup rings)	565806 Buna–N 889627 Viton®

Viton is a registered trademark of E.I. DuPont

Pressure override curves

Cartridge only
Tank pressure = 0

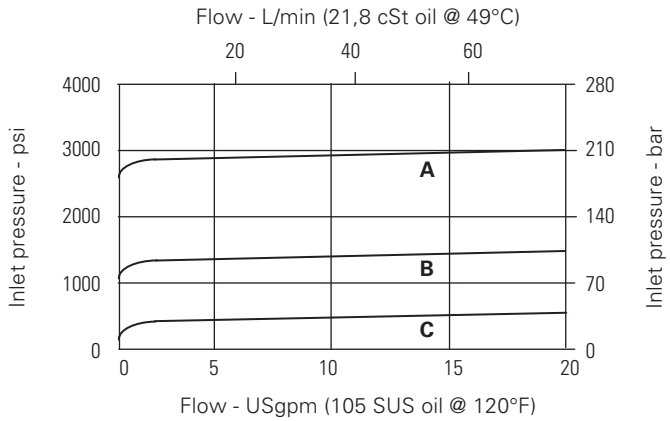

A - 36 spring
B - 18 spring
C - 6 spring

Where measurements are critical request certified drawings. We reserve the right to change specifications without notice.

RV3-10 - Relief valve

Poppet, direct acting, differential area
76 L/min (20 USgpm) • 250 bar (3600 psi)

Model code

RV3 A – 10 (V) – * – (*) – ** – **/ ** – 00

1 2 3 4 5 6 7 8 9 10

1 Function

RV3 - Relief valve

2 Cage seals

Blank - Single back-up ring
A - 1/2 thickness back-up ring on each side of o-ring (for cross port relief applications)

3 Size

10 - 10 size

4 Seal material

Blank - Buna-N
V - Viton®

5 Adjustment

C - Cap
F - Factory set
I - Internal
K - Knob
S - Screw

6 Valve housing material

Blank - Aluminum
S - Steel

7 Port size

o - Cartridge only

Code	Port size	Housing number		
		Aluminum light duty	Aluminum fatigue rated	Steel fatigue rated
3B	3/8" BSPP	02–175462	–	–
2G	1/4" BSPP	–	876702	02–175102
3G	3/8" BSPP	–	876703	02–175103
6H	SAE 6	–	876700	–
8H	SAE 8	–	876701	–
6T	SAE 6	566151	–	02–175100
8T	SAE 8	–	–	02–175101
H10H	SAE 10*	–	4997062-001	–
2K10H	SAE 10**	–	4997060-001	–

* Bolt on, dual cross over relief valve package for **Eaton H or T series motors**
** Bolt on, dual cross over relief valve package for **Eaton 2000 series motors**
(Note: Two cartridges are installed in this special housing, both are set to the same crack pressure specified in model Code position 9, maximum allowed setting is 210 bar (3000 psi), only available with RV3**A** option and aluminum housing.)
See section J for housing details.

8 Cracking pressure range

Note: Code based on pressure in psi.

3 - 3,5-21 bar (50-300 psi)
6 - 7-41 bar (100-600 psi)
9 - 14.5-62 bar (200-900 psi)
18 - 21-124 bar (300-1800 psi)
36 - 41-250 bar (600-3600 psi)

9 Setting pressure

Within ranges in 8

Blank - Normal factory setting at approximate mid-range. User requested settings in 3,45 bar (50 psi) steps, Coded as in the following examples:
10 - 70 bar (1000 psi)
10.5 - 72,4 bar (1050 psi)

10 Special features

00 - None
(Only required if valve has special features, omitted if "00.")
SS - 316 Stainless Steel external components

Torque cartridge in housing
A - 47-54 Nm (35-40 ft. lbs)
S - 68-75 Nm (50-55 ft. lbs)

⚠ Warning

Aluminum housings can be used for pressures up to 210 bar (3000 psi). Steel housings must be used for operating pressures above 210 bar (3000 psi).

Dimensions

mm (inch)

Cartridge only

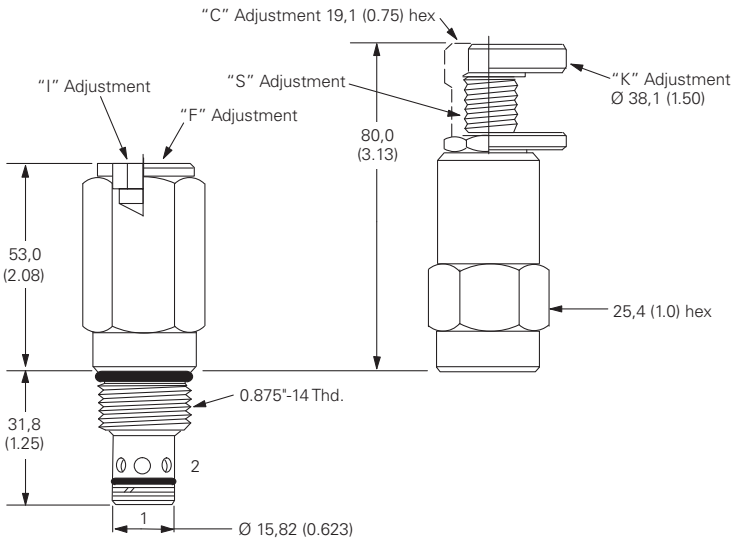

Installation drawing (Steel)

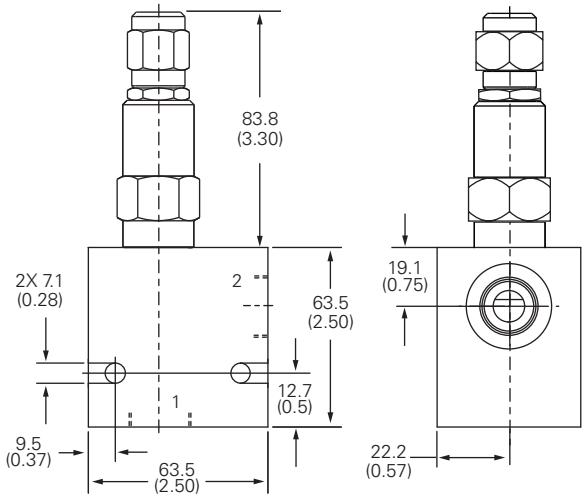

Where measurements are critical request certified drawings. We reserve the right to change specifications without notice.

E

RV8-10 - Relief valve

Poppet, direct acting, differential area
76 L/min (20 USgpm) • 350 bar (5000 psi)

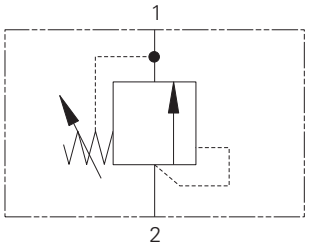

Operation

This valve remains closed from port 2 to 1 until the predetermined setting has been reached at port 2.

The pressure acts on the differential area between the seat and the seal diameter on the poppet.

Features

Hardened and ground working parts. Low leakage poppet design. High flow rate for a compact cartridge.

Sectional view

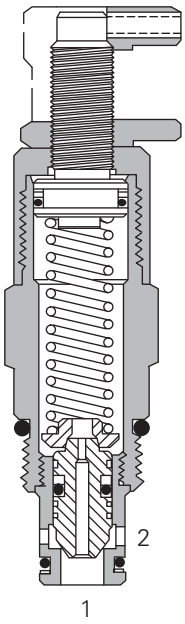

Performance data

Ratings and specifications

Performance data is typical with fluid at 21,8 cSt (105 SUS) and 49° C (120° F)	
Typical application pressure (all ports)	350 bar (5000 psi)
Cartridge fatigue pressure (infinite life)	350 bar (5000 psi)
Rated flow	76 L/min (20 USgpm)
Internal leakage	0.3 mL/min (5 drops/min) @ 85% of Pressure Setting
Cavity	C-10–2
Standard housing materials	Aluminum or steel
Temperature range	-40° to 120°C (-40° to 248°F)
Fluids	All general purpose hydraulic fluids such as: MIL–H–5606, SAE 10, SAE 20, etc.
Filtration	Cleanliness Code 18/**16/13**
Weight cartridge only	0,22 kg (0.48 lbs)
Seal kits – RV8	565803 Buna–N 566086 Viton®
– RV8A	565806 Buna–N 889627 Viton®

Viton is a registered trademark of E.I. DuPont

Description

This is a fast, direct acting differential area screw-in cartridge relief valve. The valve is ideal for the protection against shock pressures that can damage actuators.

Pressure override curves

Cartridge only
Tank pressure = 0

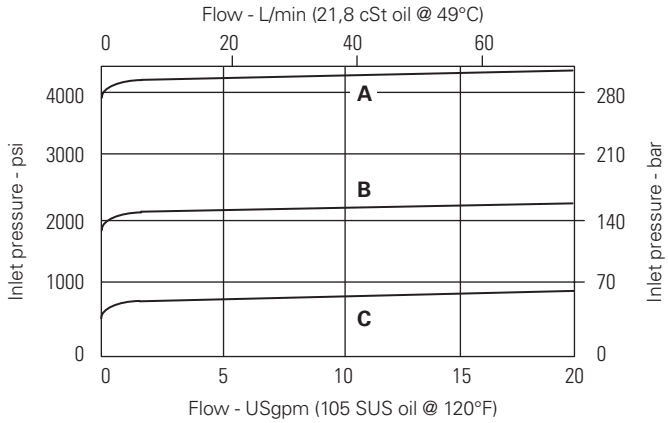

A - 50 spring
B - 20 spring
C - 12 spring

Where measurements are critical request certified drawings. We reserve the right to change specifications without notice.

RV8-10 - Relief valve

Poppet, direct acting, differential area
76 L/min (20 USgpm) • 350 bar (5000 psi)

Model code

RV8 A – 10 (V) – * – (S) – ** – **/ ** – 00

1 2 3 4 5 6 7 8 9 10

1 Function

RV8 - Relief valve

2 Cage seals

Blank - Single back-up ring as shown
A - 1/2 thickness back-up ring on each side of o-ring (for cross port relief applications)

3 Size

10 - 10 size

4 Seal material

Blank - Buna-N
V - Viton®

5 Adjustment

C - Cap
F - Factory set
I - Internal
K - Knob
S - Screw

6 Valve housing material

Blank - Aluminum
S - Steel

7 port size

0 - Cartridge only

Code	Port size	Housing number		
		Aluminum light duty	Aluminum fatigue rated	Steel fatigue rated
3B	3/8" BSPP	02–175462	–	–
2G	1/4" BSPP	–	876702	02–175102
3G	3/8" BSPP	–	876703	02–175103
6H	SAE 6	–	876700	–
8H	SAE 8	–	876701	–
6T	SAE 6	566151	–	02–175100
8T	SAE 8	–	–	02–175101

See section J for housing.

8 Cracking pressure range

Note: Code based on pressure in psi.

4 - 3,45-30 bar (50-450 psi)
12 - 7-86 bar (100-1250 psi)
25 - 17-175 bar (250-2500 psi)
50 - 38-350 bar (550-5000 psi)

9 Setting pressure

Within ranges in 8

Blank - Normal factory setting at approximate mid-range. User requested settings in 3,45 bar (50 psi) steps, Coded as in the following examples:

10 - 70 bar (1000 psi)
10.5 - 72,4 bar (1050 psi)

Torque cartridge in housing
A - 47-54 Nm (35-40 ft. lbs)
S - 68-75 Nm (50-55 ft. lbs)

10 Special features

00 - None
(Only required if valve has special features, omitted if "00.")
SS - 316 Stainless Steel external components

⚠ Warning

Aluminum housings can be used for pressures up to 210 bar (3000 psi). Steel housings must be used for operating pressures above 210 bar (3000 psi).

Dimensions

mm (inch)

Cartridge only

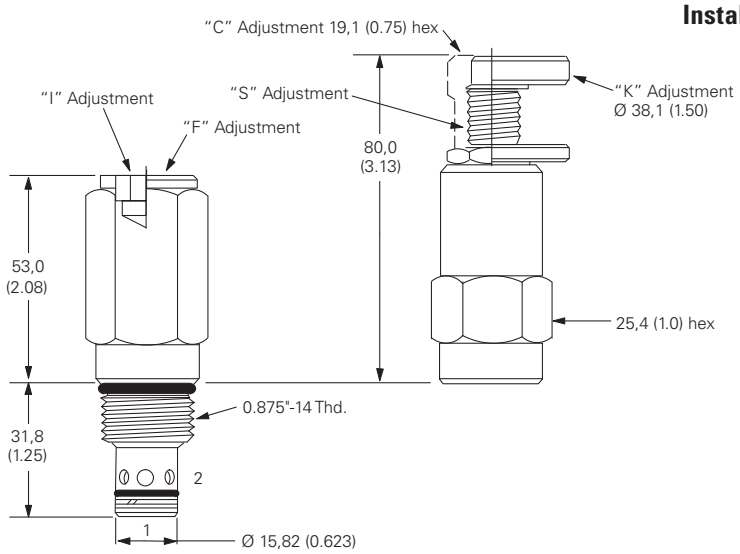

Installation drawing (Steel)

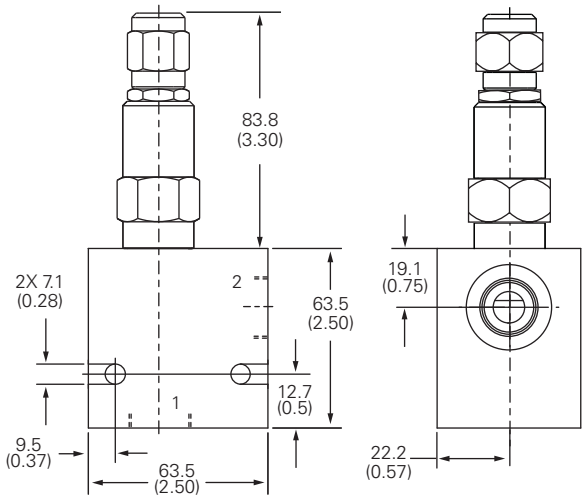

Where measurements are critical request certified drawings. We reserve the right to change specifications without notice.

E

RV3-12 - Relief valve

Poppet, direct acting, differential area
132 L/min (35 USgpm) • 350 bar (5000 psi)

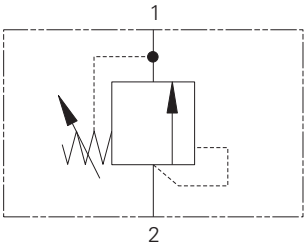

Operation

This valve remains closed from port 2 to 1 until the predetermined setting has been reached at port 2.

The pressure acts on the differential area between the seat and the seal diameter on the poppet.

Features

Hardened and ground working parts. Low leakage poppet design. High flow rate for a compact cartridge.

Sectional view

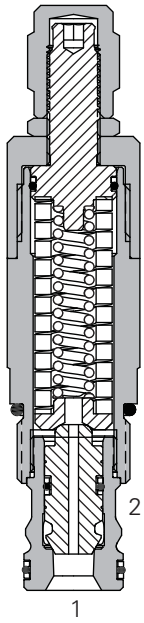

Performance data

Ratings and specifications

Performance data is typical with fluid at 21,8 cSt (105 SUS) and 49° C (120° F)	
Typical application pressure (all ports)	350 bar (5000 psi)
Cartridge fatigue pressure (infinite life)	350 bar (5000 psi)
Rated flow	132 L/min (35 USgpm)
Cracking pressure ranges	3,4-275 bar (50-4000 psi)
Temperature range	-40° to 120°C (-40° to 248°F)
Cavity	C-12-2 or C-12-2U
Fluids	All general purpose hydraulic fluids such as: MIL-H-5606, SAE 10, SAE 20, etc.
Filtration	Cleanliness Code 18/**16/13**
Standard housing materials	Aluminum or steel
Weight cartridge only	0,49 kg (1.08 lbs)
Seal kit	02-165889 (Buna-N) 02-165888 (Viton®)

Viton is a registered trademark of E.I. DuPont

Endurance tested to 1 million cycles at full rated flow and pressure.

Description

This is a fast, direct acting differential area screw-in cartridge relief valve. The valve is ideal for the protection against shock pressures that can damage actuators.

Pressure drop curves

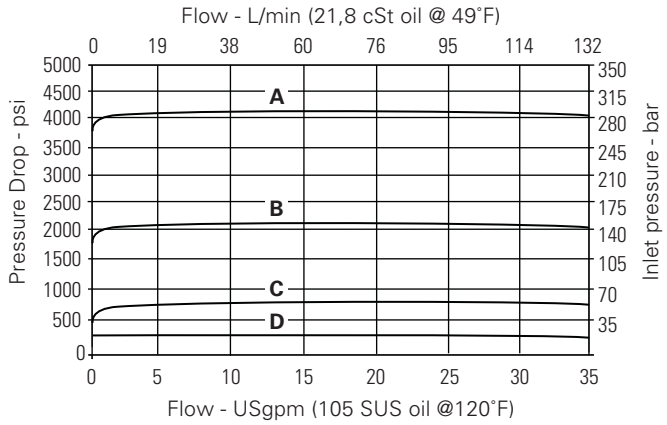

A - 40 spring
B - 22 spring
C - 8.5 spring
D - 2.5 spring

Where measurements are critical request certified drawings. We reserve the right to change specifications without notice.

RV3-12 - Relief valve

Poppet, direct acting, differential area
132 L/min (35 USgpm) • 350 bar (5000 psi)

Model code

RV3 – 12–(V) – * – (*) – *** – (U) – **/ ** – **

1 2 3 4 5 6 7 8 9 10

1 Function

RV3 - Relief valve

2 Size

12 - 12 size

3 Seal material

Blank - Buna-N
V - Viton®

4 Adjustment

C - Cap
K - Knob
F - Factory set
S - Screw

5 Valve housing material

Omit for cartridge only
A - Aluminum
S - Steel

6 Port size

Code	Port size	Housing number			
		C-12-2 Aluminum Fatigue rated	C-12-2U Aluminum Fatigue rated	C-12-2 Steel Fatigue rated	C-12-2U Steel Fatigue rated
4G	1/2" BSPP	02-161118	02-161116	30915-1	30915-2
6G	3/4" BSPP	02-161117	02-161115	02-169665	02-162922
10T	SAE 10	02-160640	02-160641	02-169744	02-169817
12T	SAE 12	02-160644	02-160645	02-169782	02-169790

See section J for housing.

7 Cavity

Blank - Cavity without undercut
U - Cavity with undercut

8 Cracking pressure range

Note: Code based on pressure in psi.
2.5 - 3,4-17 bar (50-250 psi)
8.5 - 13-55 bar (200-850 psi)
22 - 20-150 bar (300-2200 psi)
40 - 40-275 bar (600-4000 psi)

9 Setting pressure

Within ranges in 8
Blank - Normal factory setting at approximate mid-range.

Optional - User requested settings in 3,45 bar (50 psi) steps, Coded as in the following examples:

10 - 70 bar (1000 psi)
10.5 - 72,4 bar (1050 psi)

Torque cartridge in housing
A - 81-95 Nm (60-70 ft. lbs)
S - 102-115 Nm (75-85 ft. lbs)

10 Special features

00 - None
(Only required if valve has special features, omitted if "00.")

⚠ Warning

Aluminum housings can be used for pressures up to 210 bar (3000 psi). Steel housings must be used for operating pressures above 210 bar (3000 psi).

Dimensions

mm (inch)

Cartridge only

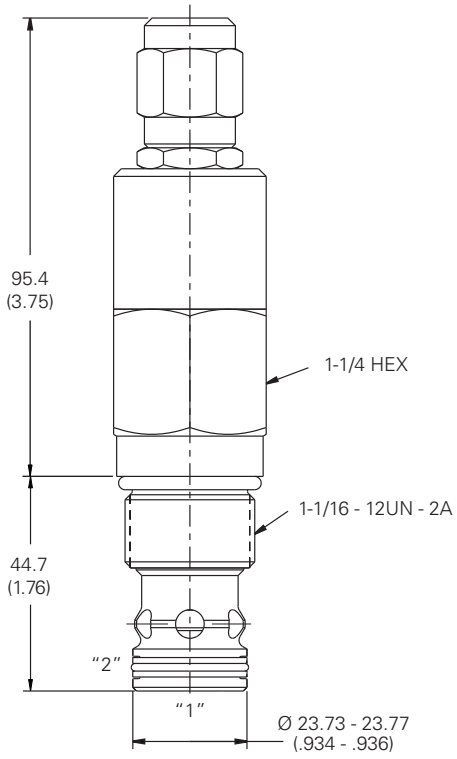

Adjustment Code C

Installation drawing (Steel)

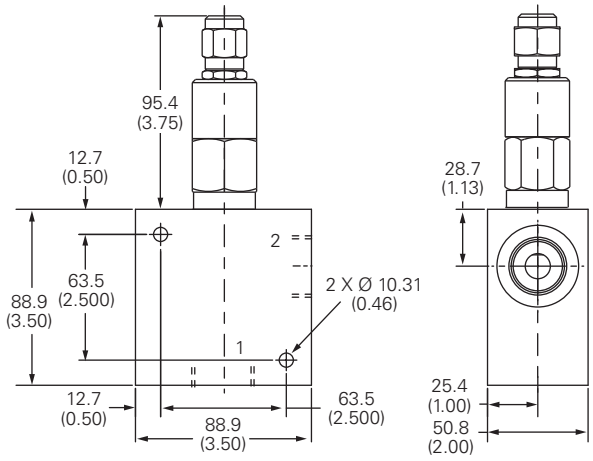

Where measurements are critical request certified drawings. We reserve the right to change specifications without notice.

E

RV8-12 - Relief valve

Poppet, direct acting, differential area
132 L/min (35 USgpm) • 350 bar (5000 psi)

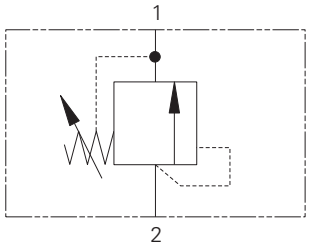

Operation

This valve remains closed from port 2 to 1 until the predetermined setting has been reached at port 2.

The pressure acts on the differential area between the seat and the seal diameter on the poppet.

Features

Hardened and ground working parts. Low leakage poppet design. High flow rate for a compact cartridge.

Sectional view

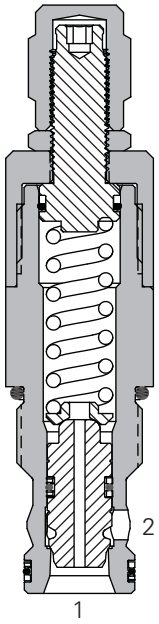

Performance data

Ratings and specifications

Performance data is typical with fluid at 23,3 cSt (111 SUS) and 49° C (120° F)	
Typical application pressure (all ports)	350 bar (5000 psi)
Cartridge fatigue pressure (infinite life)	350 bar (5000 psi)
Rated flow	132 L/min (35 USgpm)
Cracking Pressure Range	3,4-275 bar (50-4000 psi)
Internal leakage	0.3 mL/min (5 drops/min) @ 85% of Pressure Setting
Cavity	C-12–2 or C-12–2U
Standard housing materials	Aluminum or steel
Temperature range	-40° to 120°C (-40° to 248°F)
Fluids	All general purpose hydraulic fluids such as: MIL–H–5606, SAE 10, SAE 20, etc.
Filtration	Cleanliness Code 18/**16/13**
Weight cartridge only	0.43 kg (0.94 lbs)
Seal kits	565803 Buna–N 566086 Viton®

Viton is a registered trademark of E.I. DuPont

Description

This is a fast, direct acting differential area screw-in cartridge relief valve. The valve is ideal for the protection against shock pressures that can damage actuators.

Pressure drop curves

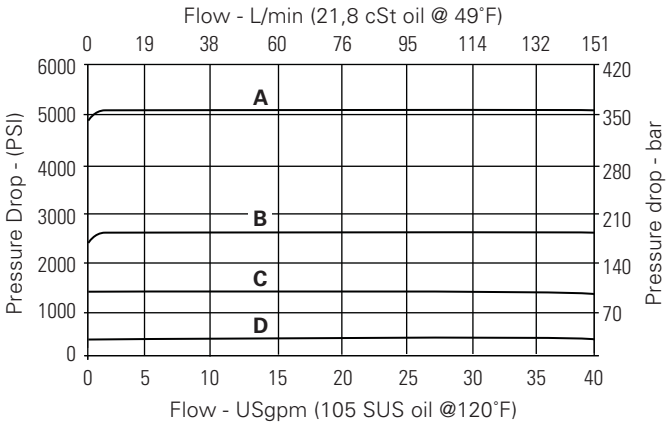

A - 50 spring
B - 25 spring
C - 12 spring
D - 4 spring

Where measurements are critical request certified drawings. We reserve the right to change specifications without notice.

RV8-12 - Relief valve

Poppet, direct acting, differential area
132 L/min (35 USgpm) • 350 bar (5000 psi)

Model code

RV8 – 12 (V) – X – (*) – *** – (U) – **/ ** – **

1 2 3 4 5 6 7 8 9 10

1 Function

RV3 - Relief valve

2 Size

12 - 12 size

3 Seal material

Blank - Buna-N
V - Viton®

4 Adjustment

C - Cap
K - Knob
S - Screw

5 Valve housing material

Omit for cartridge only
A - Aluminum
S - Steel

6 Port size

Code	Port size	Housing number			
		C-12-2 Aluminum fatigue rated	C-12-2U Aluminum fatigue rated	C-12-2 Steel fatigue rated	C-12-2U Steel fatigue rated
4G	1/2" BSPP	02-161118	02-161116	30915-1	30915-2
6G	3/4" BSPP	02-161117	02-161115	02-169665	02-162922
10T	SAE 10	02-160640	02-160641	02-169744	02-169817
12T	SAE 12	02-160644	02-160645	02-169782	02-169790

See section J for housing.

7 Cavity

Blank - Cavity without undercut
U - Cavity with undercut

8 Cracking pressure range

Note: Code based on pressure in psi.
4 - 3,4-350 bar (50-5000 psi)
12 - 13-85 bar (200-1250 psi)
25 - 20-170 bar (300-2500 psi)
50 - 40-350 bar (600-5000 psi)

9 Setting pressure

Within ranges in 8
Blank - Normal factory setting at approximate mid-range.

Optional - User requested settings in 3,45 bar (50 psi) steps, Coded as in the following examples:

10 - 70 bar (1000 psi)
10.5 - 72,4 bar (1050 psi)

10 Special features

00 - None
(Only required if valve has special features, omitted if "00.")

Torque cartridge in housing
A - 81-95 Nm (60-70 ft. lbs)
S - 102-115 Nm (75-85 ft. lbs)

⚠ Warning

Aluminum housings can be used for pressures up to 210 bar (3000 psi). Steel housings must be used for operating pressures above 210 bar (3000 psi).

Dimensions

mm (inch)

Cartridge only

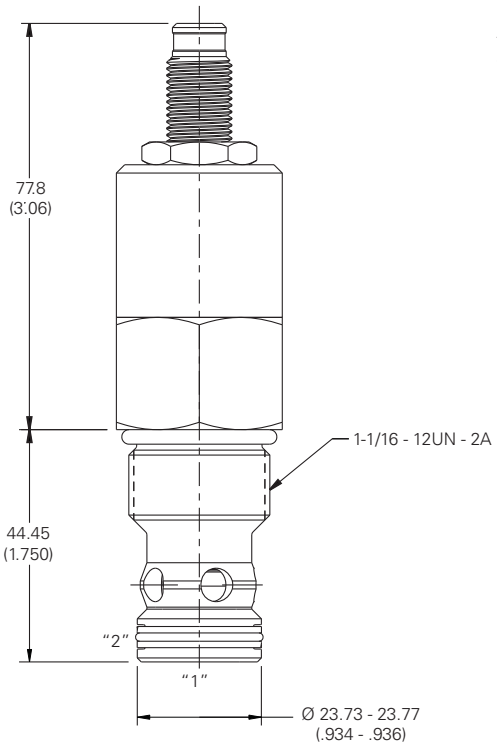

ADJUSTMENT CODE "S"

Installation Drawing (Steel)

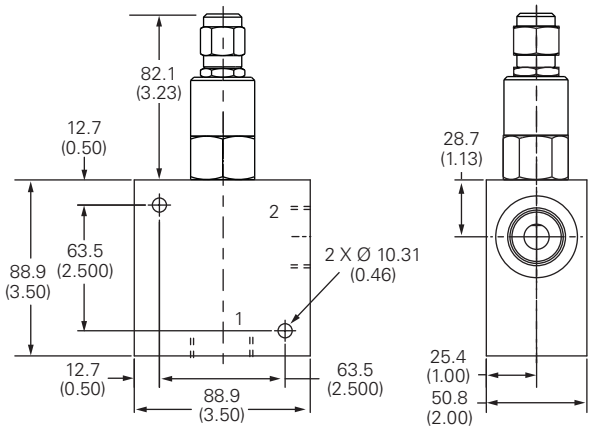

Where measurements are critical request certified drawings. We reserve the right to change specifications without notice.

E

RV8-16 - Relief valve

Poppet, direct acting, differential area
30-303 L/min (8-80 USgpm) • 350 bar (5000 psi)

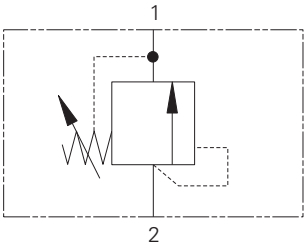

Operation

This valve remains closed from port 2 to 1 until the predetermined setting has been reached at port 2.

The pressure acts on the differential area between the seat and the seal diameter on the poppet.

Features

Hardened and ground working parts. Low leakage poppet design. High flow rate for a compact cartridge.

Sectional view

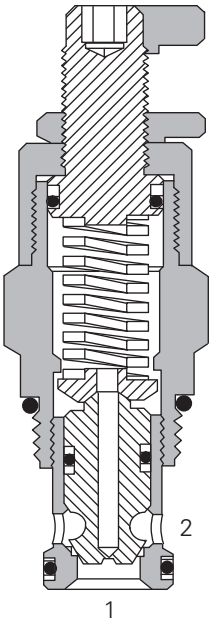

Performance data

Ratings and specifications

Performance data is typical with fluid at 21,8 cSt (105 SUS) and 49° C (120° F)	
Typical application pressure	350 bar (5000 psi)
Cartridge fatigue pressure (infinite life)	350 bar (5000 psi)
Rated flow	30-303 L/min (8-80 USgpm)
Cavity	C-16–2
Standard housing materials	Aluminum or steel
Temperature range	-40° to 120°C (-40° to 248°F)
Fluids	All general purpose hydraulic fluids such as: MIL–H–5606, SAE 10, SAE 20, etc.
Filtration	Cleanliness Code 18/**16/13**
Weight cartridge only	0,71 kg (1.57 lbs)
Seal kits	565810 Buna–N 889609 Viton®

Viton is a registered trademark of E.I. DuPont

Description

This is a fast, direct acting differential area screw-in cartridge relief valve. The valve is ideal for the protection against shock pressures that can damage actuators.

Pressure override curves

Cartridge only

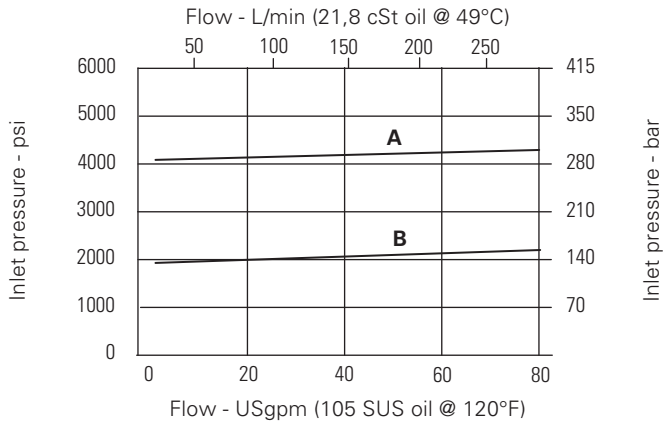

A - 50 spring
B - 35 spring

Where measurements are critical request certified drawings. We reserve the right to change specifications without notice.

RV8-16 - Relief valve

Poppet, direct acting, differential area
30-303 L/min (8-80 USgpm) • 350 bar (5000 psi)

Model code

RV3 – 16 (V) – * – (S) – ** – **/ ** – 00

1 2 3 4 5 6 7 8 9

1 Function
RV3- Relief valve

2 Size
16 - 16 size

3 Seal material
Blank - Buna-N
V - Viton®

4 Adjustment
C - Cap
K - Knob
S - Screw

5 Valve housing material
Blank - Aluminum
S - Steel

6 Port size
0 - Cartridge only

Code	Port size	Housing number		
		Aluminum light duty	Aluminum fatigue rated	Steel fatigue rated
6B	3/4" BSPP	02–175463	–	–
4G	1/2" BSPP	–	876716	02–175106
6G	3/4" BSPP	–	876718	02–175107
10H	SAE 10	–	876717	–
12H	SAE 12	–	866113	–
10T	SAE 10	–	–	02–175104
12T	SAE 12	566149	–	02–175105

See section J for housing.

7 Cracking pressure range
Note: Code based on pressure in psi.
5 - 3,5-35 bar (50-500 psi)
13 - 35-90 bar (300-1300 psi)
35 - 83-240 bar (1200-3500 psi)
50 - 140-350 bar (2000-5000 psi)

8 Setting pressure
Within ranges in 7
Blank - Normal factory setting at approximate mid-range. User requested settings in 3,45 bar (50 psi) steps, Coded as in the following examples:
10 - 70 bar (1000 psi)
10.5 - 72,4 bar (1050 psi)

Torque cartridge in housing
A - 108-122 Nm (80-90 ft. lbs)
S - 136-149 Nm (100-110 ft. lbs)

9 Special features
00 - None
(Only required if valve has special features, omitted if "00.")
SS - 316 Stainless Steel external components

⚠ Warning
Aluminum housings can be used for pressures up to 210 bar (3000 psi). Steel housings must be used for operating pressures above 210 bar (3000 psi).

Dimensions
mm (inch)

Cartridge only

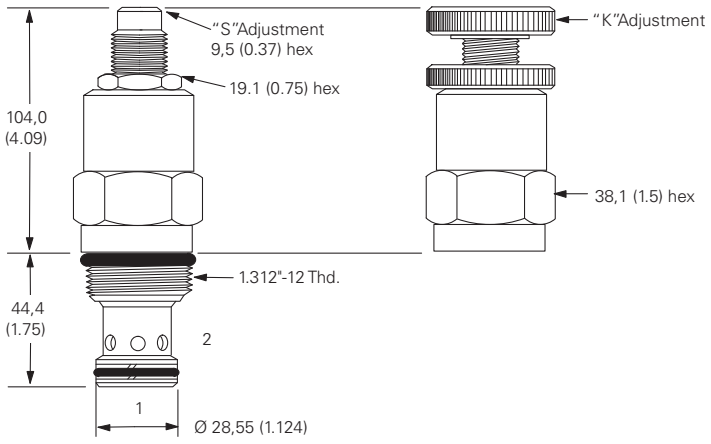

Installation drawing (Steel)

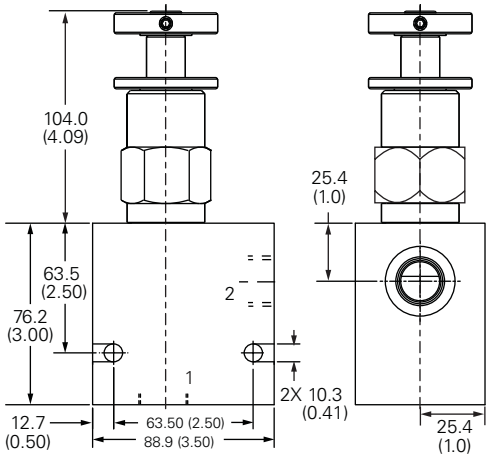

Where measurements are critical request certified drawings. We reserve the right to change specifications without notice.

E

1LR300 - Relief valve

Poppet, direct acting, differential area
380 L/min (100 USgpm) • 350 bar (5000 psi)

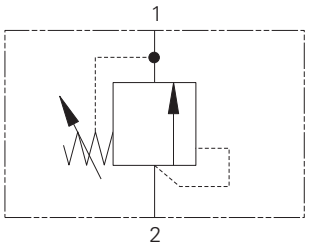

Operation

Pressure acts over the differential area between the seat and seal on the poppet. When the pressure exceeds the setting, the valve opens, allowing relief flow to tank, washing contaminant away from the seat.

Features

Dirt tolerant, robust and consistent with good pressure rise to increase in flow characteristics for a direct acting valve. Cartridge construction provides for maximum flexibility in mounting.

Sectional view

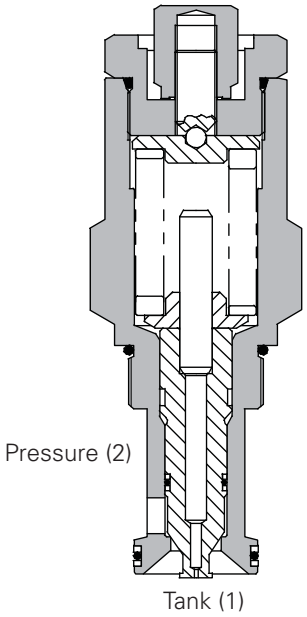

Performance data

Ratings and specifications

Figures based on: Oil Temp = 40°C Viscosity = 32 cSt (150 SUS)	
Rated flow	380 L/min (100 USgpm)
Max setting	350 bar (5000 psi)
Cartridge material	Working parts hardened and ground steel. External surfaces zinc plated.
Body material	Standard aluminium (up to 210 bar*). Add suffix "377" for steel option.
Mounting position	Unrestricted
Cavity	A1126 (See Section M)
Torque cartridge into cavity	150 Nm (110 lbs ft)
Weight	1LR300 1.04 kg (2.3 lbs)) 1LR350 2.08 kg (4.6 lbs)
Seal kit	SK207 (Nitrile) SK207V (Viton®)
Recommended filtration level	BS5540/4 Class 18/13 (25 micron nominal)
Operating temp	-30°C to +90°C (-22°C to 194°F
Leakage	1 millilitre/min nominal (15 dpm)
Nominal viscosity range	5 to 500 cSt

Viton is a registered trademark of E.I. DuPont

Description

This is a fast, direct acting differential area screw-in cartridge relief valve. Ideal for intermittent duty as protection against overload or surge conditions for all types of actuators. Very fast acting and extremely dirt tolerant.

Pressure drop curves

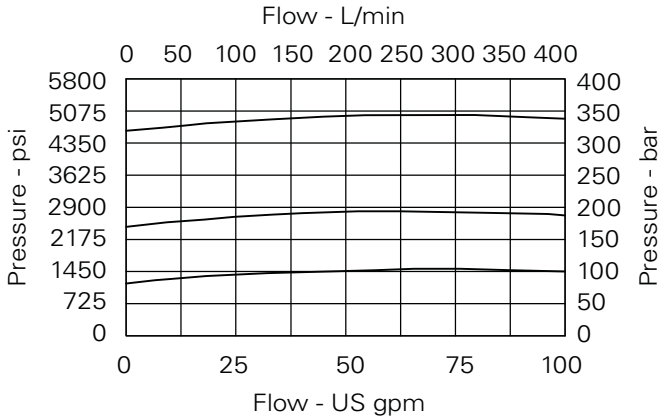

Where measurements are critical request certified drawings. We reserve the right to change specifications without notice.

1LR300 - Relief valve

Poppet, direct acting, differential area
380 L/min (100 USgpm) • 350 bar (5000 psi)

Model code

1LR* – F 10W – 35 S**

1 2 3 4 5

1 Function

1LR300 - Cartridge Only
1LR350 - Cartridge and Body

2 Adjustment means

F - Screw Adjustment

3 Port size

Code	Port size	Housing number	
		Aluminium	Steel
10W	1 1/4" BSP	B5134	B882
20T	1 1/4" SAE	B7783	B11553

4 Pressure range

Note: Code based on pressure in bar.
20 - 35-210 bar.
Std setting 100 bar
35 - 70-350 bar.
Std setting 280 bar
Std setting made at 30 L/min

5 Seals

S - Nitrile (For use with most industrial hydraulic oils)

SV - Viton® (For high temperature and most special fluid applications)

E

Dimensions

mm (inch)

Note: Tightening torque of "F" adjuster locknut - 20 to 25 Nm.

Note: For applications above 210 bar please consult our technical department or use the steel body option.

Cartridge only

Basic Code
1LR300

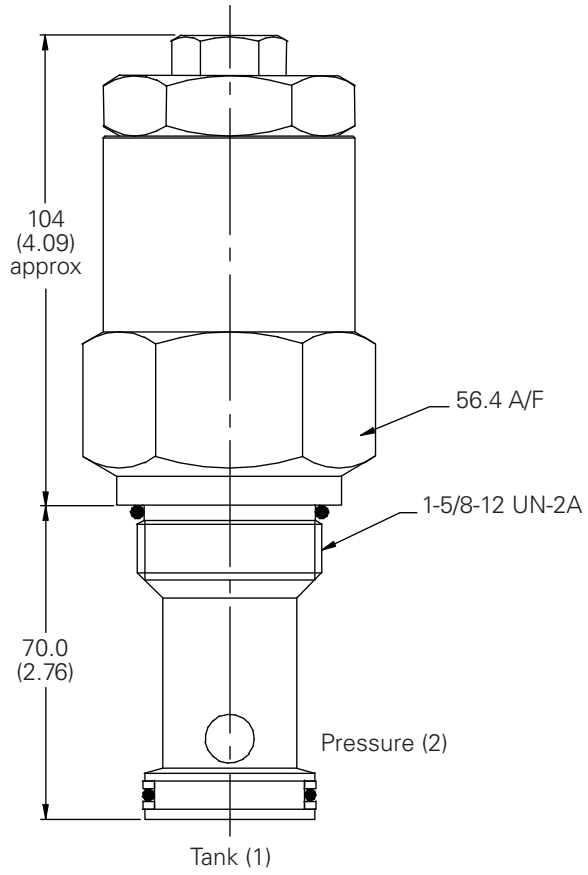

Installation drawing

1 1/4" Ports
Basic Code
1LR350

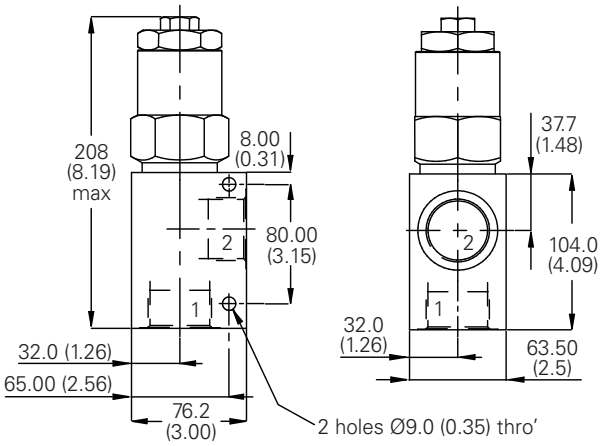

Where measurements are critical request certified drawings. We reserve the right to change specifications without notice.

1UAR100 - Relief valve

Spool, pilot operated, unloading
150L/min (40 USgpm) • 350 bar (5000 psi)

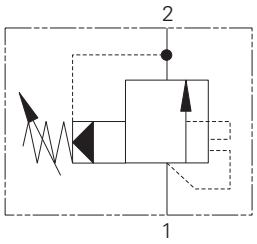

Operation

System pressure acts on the pilot section of the valve. When the valve setting is reached, the pilot section opens and the pilot flow causes the spool to move back uncovering the radial vent port.

The main section then opens fully with pilot flow passing through the vent port. When the system pressure is reduced to zero the valve will close.

Features

High accuracy of pilot operated design. Hardened working parts give long, reliable, trouble-free life. Cartridge construction for installation into your own manifold.

Sectional view

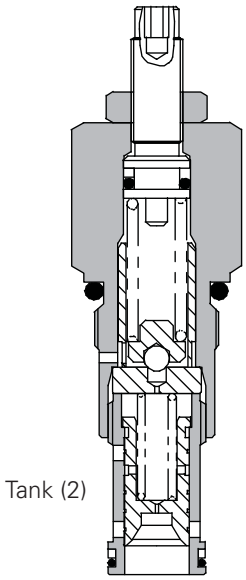

Performance data

Ratings and specifications

Figures based on: Oil Temp = 40°C Viscosity = 32 cSt (150 SUS)	
Rated flow	150 L/min (40 USgpm)
Max setting	350 bar (5000 psi)
Cartridge material	Working parts hardened and ground steel. External surfaces zinc plated.
Body material	Standard aluminium (up to 210 bar*). Add suffix "377" for steel option.
Mounting position	Unrestricted
Cavity	A881 (See Section M)
Torque cartridge into cavity	60 Nm (44 lbs ft)
Weight	1UAR100 0.14 kg (0.30 lbs) 1UAR145 0.34 kg (0.75 lbs) 1UAR150 0.65 kg (1.40 lbs) 1UAR155 0.91 kg (2.00 lbs)
Seal kit	SK164 (Nitrile) SK164V (Viton®)
Recommended filtration level	BS5540/4 Class 18/13 (25 micron nominal)
Operating temp	-30°C to +90°C (-22° to +194°F)
Leakage	100 milliliters/min nominal
Nominal viscosity range	5 to 500 cSt

Viton is a registered trademark of E.I. DuPont

Description

The off-loading (kick-down) relief valve opens to unload a hydraulic system if the system pressure exceeds the valve setting. It acts as a fuse to protect persons and machinery where prolonged operation at excess pressure cannot be tolerated.

Pressure drop curves

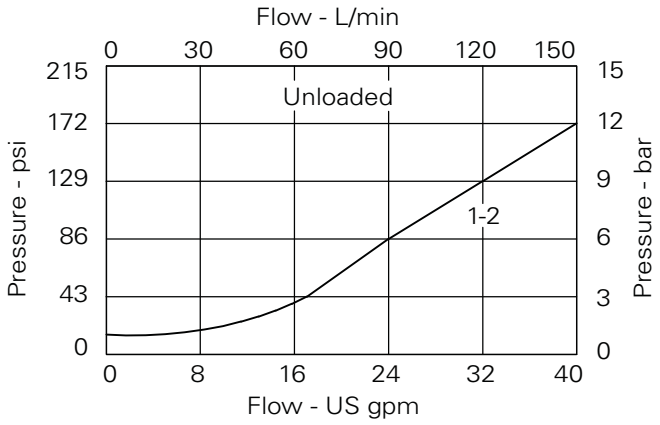

Where measurements are critical request certified drawings. We reserve the right to change specifications without notice.

1UAR100 - Relief valve

Spool, pilot operated, unloading
150L/min (40 USgpm) • 350 bar (5000 psi)

Model code

1UAR*– P 3W– 35 S**

1 2 3 4 5

1 Function

1UAR100 - Cartridge Only

1UAR145 - Cartridge and Body

1UAR150 - Cartridge and Body Through Ported

1UAR155 - Cartridge and Body Through Ported

2 Adjustment means

P - Leakproof Screw Adjustment

R - Handknob Adjustment

G - Tamperproof Cap

(See page E-7 for dimensions)

3 Port size

Code	Port size	Housing number - body only				
		Aluminium 1UAR145	Aluminium 1UAR150	Steel 1UAR150	Aluminium 1UAR155	Steel 1UAR155
3W	3/8" BSP		C1084			
4W	1/2" BSP	B4851	C1044	C593		
6W	3/4" BSP	B3954	C1086	C4917		
8W	1" BSP				B1617	B4596
6T	3/8" SAE		B10784			
8T	1/2" SAE	B19403	C7140			
12T	3/4" SAE	B19404	B10506	B10742		
16T	1" SAE				B1037	B24040

4 Pressure range

Note: Code based on pressure in bar.

7 - 2-70 bar. Std setting 35 bar

20 - 10-210 bar. Std setting 100 bar

40 - 50-350 bar. Std setting 210 bar

Std setting made at 14 L/min

5 Seals

S - Nitrile (For use with most industrial hydraulic oils)

SV - Viton (For high temperature and most special fluid applications)

Dimensions

mm (inch)

Cartridge only

Basic Code

1UAR100

Note: For applications above 210 bar, please consult our technical department or use the steel body option.

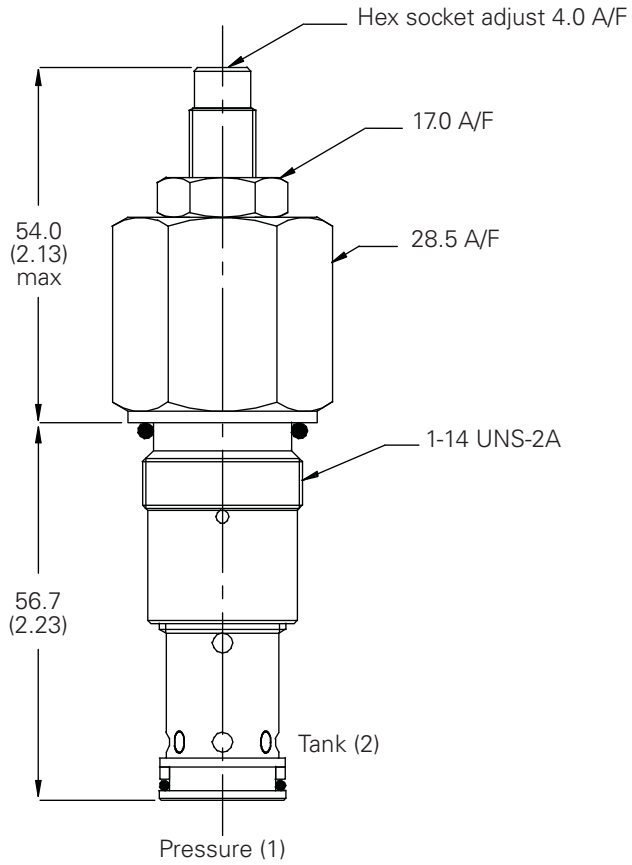

Complete valve

1/2", 3/4" Ports

Basic Code

1UAR145

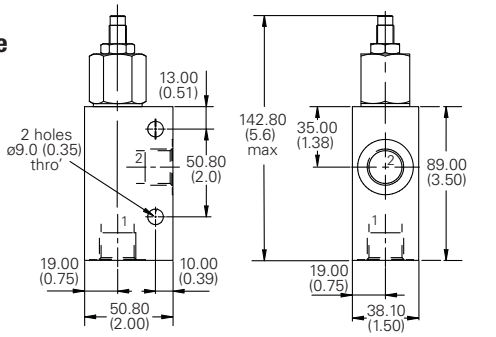

Complete valve

3/8", 1/2", 3/4" Ports

Basic Code

1UAR150

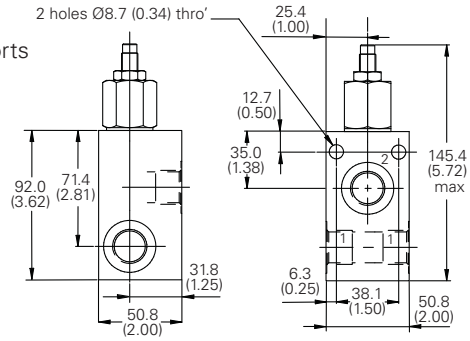

Complete valve

1" Ports

Basic Code

1UAR155

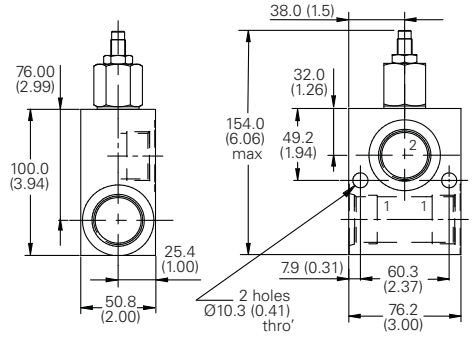

Where measurements are critical request certified drawings. We reserve the right to change specifications without notice.

1GR30 - Relief valve

Spool, direct acting
30 L/min (8 USgpm) • 160 bar (2300 psi)

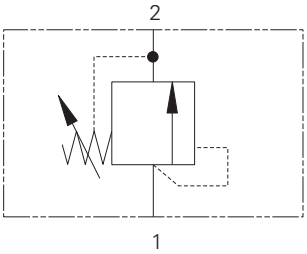

Operation

The valve is held closed by the spring until pressure on the piston overcomes the valve setting, allowing relief flow to tank through a ring of radial holes.

Features

Stable, quiet operation. Cartridge construction gives maximum flexibility in mounting. Offering good repeatability and reseat.

Sectional view

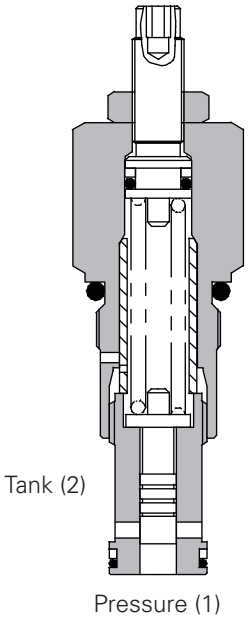

Performance data

Ratings and specifications

Figures based on: Oil Temp = 40°C Viscosity = 32 cStt (150 SUS)	
Rated flow	30 L/min (8 USgpm)
Max setting	160 bar (2300 psi)
Cartridge material	Working parts hardened and ground steel. External surfaces zinc plated.
Body material	Standard aluminium (up to 210 bar*). Add suffix "377" for steel option.
Mounting position	Unrestricted
Cavity	A881 (See Section M)
Torque cartridge into cavity	60 Nm (44 lbs ft)
Weight	1GR30 0.31 kg (0.7 lbs) 1GR35 0.54 kg (1.2 lbs) 1GR36 0.91 kg (2.0 lbs)
Seal kit	SK190 (Nitrile) SK190V (Viton®)
Recommended filtration level	BS5540/4 Class 18/13 (25 micron nominal)
Operating temp	-30° to +90°C (-22° to +194°F)
Leakage	15 milliliters/min nominal
Nominal viscosity range	5 to 500 cSt

Viton is a registered trademark of E.I. DuPont

Description

This is a direct acting spool type screw in cartridge relief valve. Ideal for low pressure applications, giving good control with fairly constant flow. Also very quiet in operation when applied on low flow or unstable hydraulic systems.

Pressure drop curves

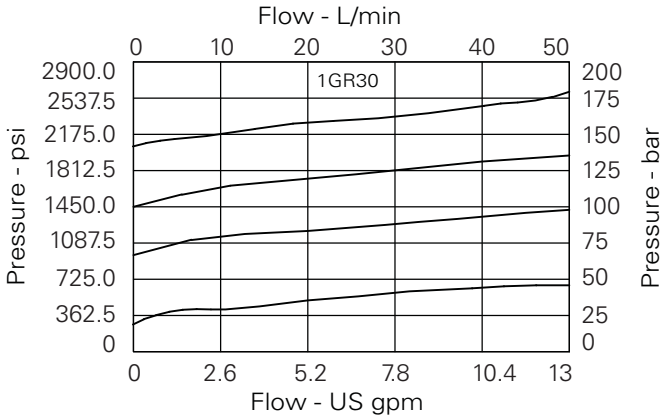

Where measurements are critical request certified drawings. We reserve the right to change specifications without notice.

1GR30 - Relief valve

Spool, direct acting
30 L/min (8 USgpm) • 160 bar (2300 psi)

Model code

1GR ** – P 3W– 16 S**

1 2 3 4 5

1 Basic code

1GR30 - Cartridge Only
1GR35 - Cartridge and Body
1GR36 - Cartridge and Body Through Ported

2 Adjustment means

P - Leakproof Screw Adjustment
R - Handknob Adjustment
G - Tamperproof Cap
(See page E-7 for dimensions)

3 Port size

Code	Port size	Housing number - body only		
		Aluminium 1GR35	Aluminium 1GR36	Steel 1GR36
3W	3/8" BSP		C1084	
4W	1/2" BSP	B4851	C1044	C593
6W	3/4" BSP	B3954	C1086	C4917
6T	3/8" SAE		B10784	
8T	1/2" SAE		C7140	
12T	3/4" SAE		B10506	B10742

4 Pressure range

Note: Code based on pressure in bar.
7 - 7-70 bar. Std setting 35 bar
16 - 14-160 bar. Std setting 155 bar
Std setting made at 4.8 L/min

5 Seals

S - Nitrile (For use with most industrial hydraulic oils)
SV - Viton (For high temperature and most special fluid applications)

Dimensions

mm (inch)

Cartridge only

Basic Code
1GR30

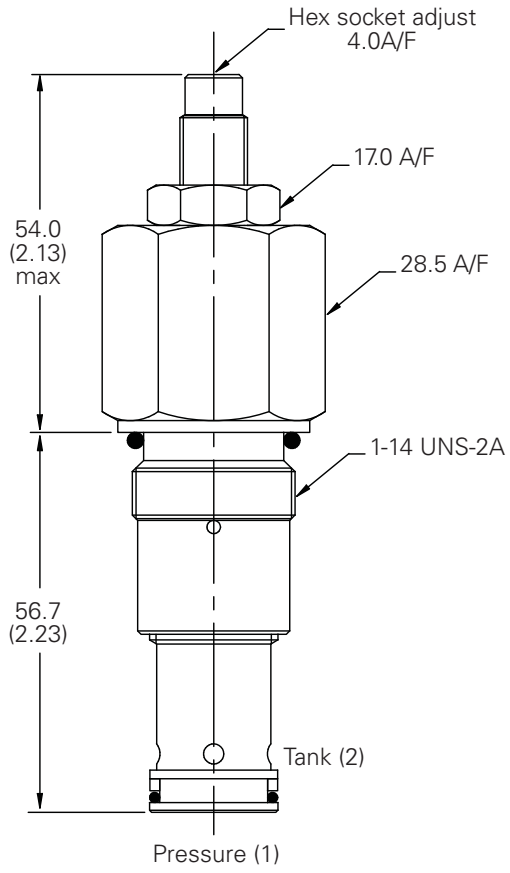

Complete valve
3/8", 1/2", 3/4" Ports
Basic Code
1GR36

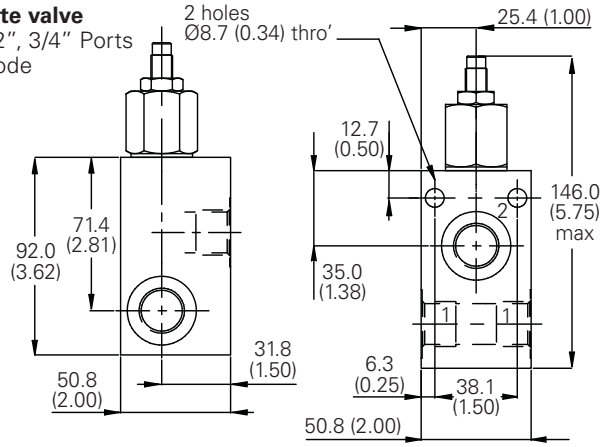

Complete Valve
1/2", 3/4" Ports
Basic Code
1GR35

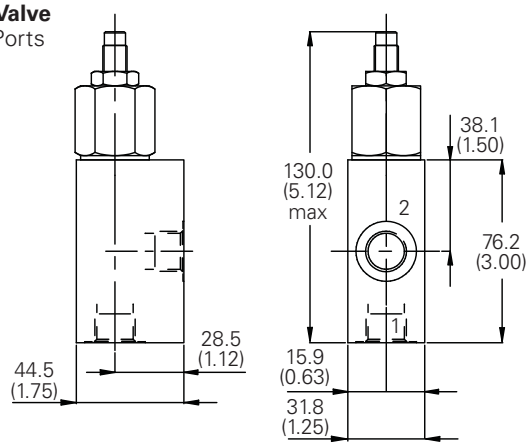

Where measurements are critical request certified drawings. We reserve the right to change specifications without notice.

E

1GR60 - Relief valve

Spool, direct acting
60 L/min (16 USgpm) • 40 bar (600 psi)

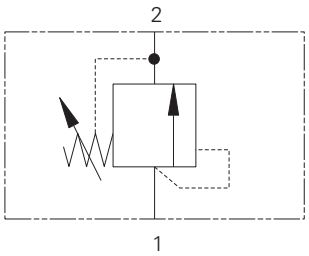

Operation

The valve is held closed by the spring until pressure on the piston overcomes the valve setting, allowing relief flow to tank through a ring of radial holes.

Features

Stable, quiet operation. Cartridge construction gives maximum flexibility in mounting. Offering good repeatability and reseat.

Sectional view

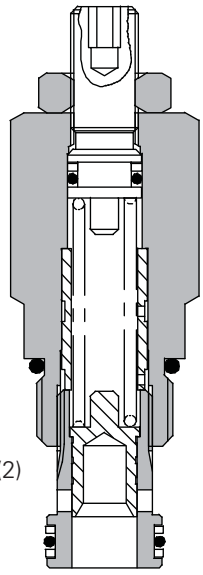

Performance data

Ratings and specifications

Figures based on: Oil Temp = 40°C Viscosity = 32 cSt (150 SUS)		
Rated flow		60 L/min (16 USgpm)
Max setting		40 bar (600 psi)
Cartridge material		Working parts hardened and ground steel. External surfaces zinc plated.
Body material		Standard aluminium (up to 210 bar*). Add suffix "377" for steel option.
Mounting position		Unrestricted
Cavity		CVA20-01-0 (See Section M)
Torque cartridge into Cavity		45 Nm (33 lbs ft)
Weight	1GR60	0.18 kg (0.4 lbs)
	1GR65	0.36 kg (0.8 lbs)
	1GR66	0.48 kg (1.0 lbs)
Seal Kit		SK696 (Nitrile) SK696V (Viton®)
Recommended filtration level		BS5540/4 Class 18/13 (25 micron nominal
Operating temp		-30°C to +90°C (-22° to +194°F)
Leakage		35 milliliters/min @ 210 bar
Nominal viscosity range		5 to 500 cSt

Viton is a registered trademark of E.I. DuPont

Description

This is a direct acting spool type screw in cartridge relief valve. Ideal for low pressure applications, giving good control with fairly constant flow. Also very quiet in operation when applied on low flow or unstable hydraulic systems.

Pressure drop curves

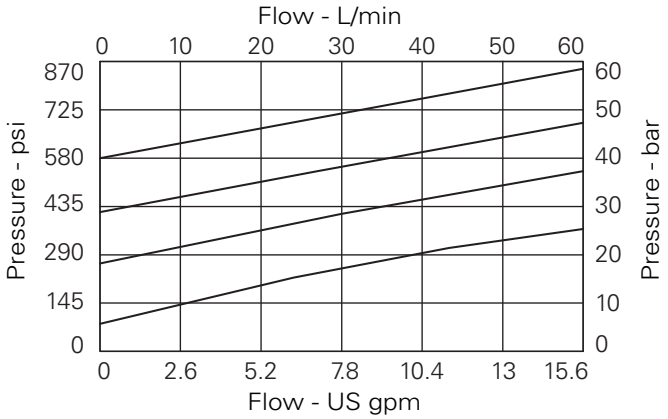

Where measurements are critical request certified drawings. We reserve the right to change specifications without notice.

1GR60 - Relief valve

Spool, direct acting
60 L/min (16 USgpm) • 40 bar (600 psi)

Model code

1GR ** – P 3W– 4 S**

1 2 3 4 5

1 Function

1GR60 - Cartridge Only
1GR65 - Cartridge and Body
1GR66 - Cartridge and Body Through Ported

2 Adjustment means

P - Leakproof Screw Adjustment
R - Handknob Adjustment
G - Tamperproof Cap
(See page E-7 for dimensions)

3 Port sizes

Code	Port size	Housing number - body only			
		Aluminium	Steel	Aluminium	Steel
		1GR65	1GR65	1GR66	1GR66
3W	3/8" BSP	A13758	A13615		
4W	1/2" BSP	A8532		B13011	B13473
6T	3/8" SAE	A10780			
8T	1/2" SAE	A10781	A11798	B10783	B13477

4 Pressure range

Note: Code based on pressure in bar.
2 - 5-20 bar. Std setting 20 bar
16 - 14-160 bar. Std setting 28 bar
Std setting made at 14 L/min

5 Seals

S - Nitrile (For use with most industrial hydraulic oils)
SV - Viton (For high temperature and most special fluid applications)

Dimensions

mm (inch)

Cartridge only

Basic Code
1GR60

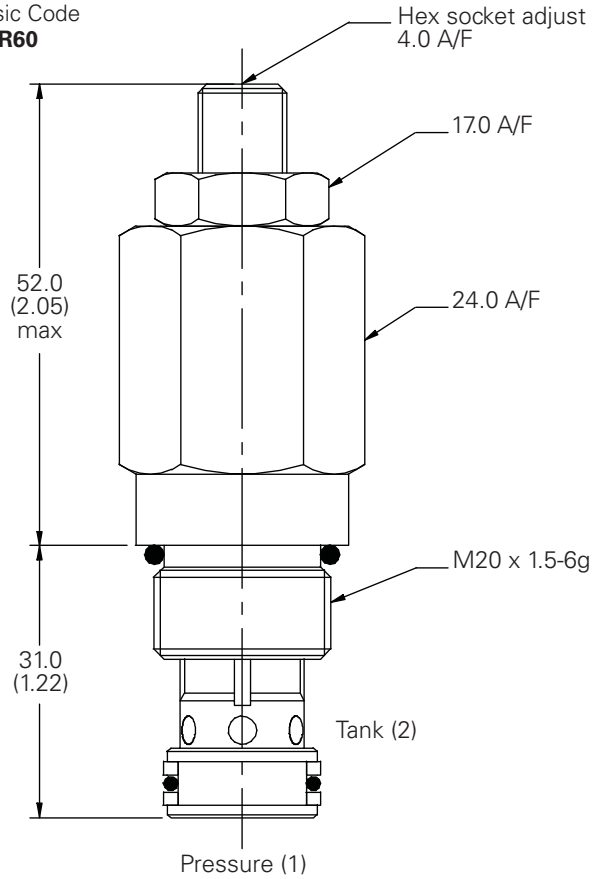

Complete valve

3/8", 1/2" Ports
Basic Code
1GR65

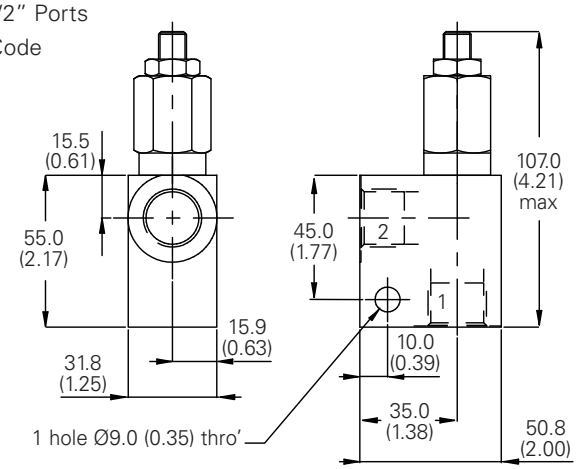

Complete valve

1/2" Ports
Basic Code
1GR66

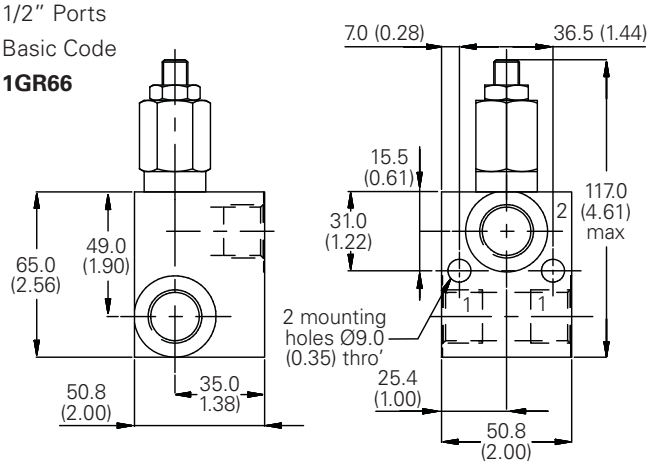

Where measurements are critical request certified drawings. We reserve the right to change specifications without notice.

E

1GR100 - Relief valve

Spool, direct acting
150 L/min (40 USgpm) • 40 bar (600 psi)

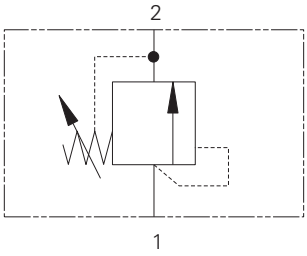

Operation

The valve is held closed by the spring until pressure on the piston overcomes the valve setting, allowing relief flow to tank through a ring of radial holes.

Features

Stable, quiet operation. Cartridge construction gives maximum flexibility in mounting. Offering good repeatability and reseat.

Sectional view

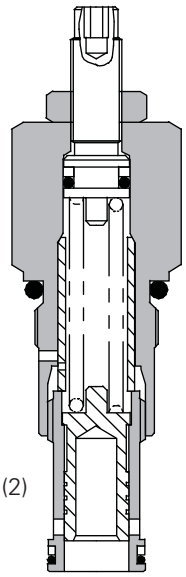

Performance data

Ratings and specifications

Figures based on: Oil Temp = 40°C Viscosity = 32 cStt (150 SUS)		
Rated flow		150 L/min (40 USgpm)
Max setting		40 bar (600 psi)
Cartridge material		Working parts hardened and ground steel. External surfaces zinc plated.
Body material		Standard aluminium (up to 210 bar*). Add suffix "377" for steel option.
Mounting position		Unrestricted
Cavity		A881 (See Section M)
Torque cartridge into cavity		60 Nm (44 lbs ft)
Weight	1GR100	0.31 kg (0.7 lbs)
	1GR145	0.54 kg (1.2 lbs)
	1GR150	0.91 kg (2.0 lbs)
	1GR155	1.08 kg (2.4 lbs)
Seal kit		SK190 (Nitrile) SK190V (Viton®)
Recommended filtration level		BS5540/4 Class 18/13 (25 micron nominal)
Operating temp		-30° to +90°C (-22° to 194°F)
Leakage		15 milliliters/min nominal
Nominal viscosity range		5 to 500 cSt

Viton is a registered trademark of E.I. DuPont

Description

This is a direct acting spool type screw in cartridge relief valve. Ideal for low pressure applications, giving good control with fairly constant flow. Also very quiet in operation when applied on low flow or unstable hydraulic systems.

Pressure drop curves

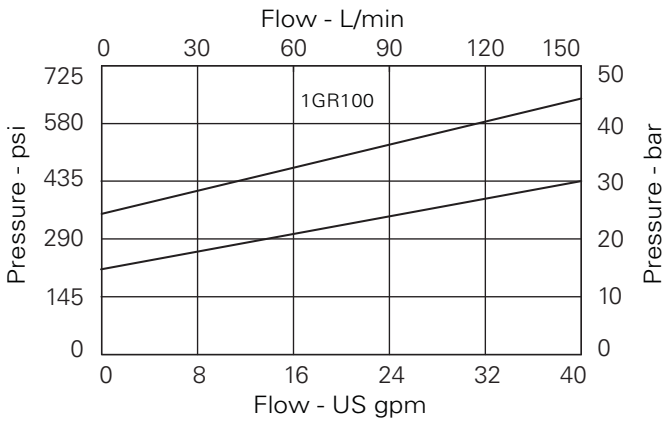

Where measurements are critical request certified drawings. We reserve the right to change specifications without notice.

Model code

1GR* – P 3W– 16 S**

1 2 3 4 5

1 Basic code

1GR100 - Cartridge Only
1GR145 - Cartridge and Body
1GR150 - Cartridge and Body Through Ported
1GR155 - Cartridge and Body Through Ported

2 Adjustment means

P - Leakproof Screw Adjustment
R - Handknob Adjustment
G - Tamperproof Cap
(See page E-7 for dimensions)

3 Port size

Code	Port size	Housing number - body only				
		Aluminium 1GR145	Aluminium 1GR150	Steel 1GR150	Aluminium 1GR155	Steel 1GR155
3W	3/8" BSP		C1084			
4W	1/2" BSP	B4851	C1044	C593		
6W	3/4" BSP	B3954	C1086	C4917		
8W	1" BSP				B1617	B4596
6T	3/8" SAE		B10784			
8T	1/2" SAE		C7140			
12T	3/4" SAE		B10506	B10742		
16T	1" SAE				B1037	B24040

4 Pressure range @ 4.8 l/min

Note: Code based on pressure in bar.
0.6 - 0.3-6 bar. Std setting 6 bar
2 - 5-25 bar. Std setting 20 bar
4 - 5-40 bar. Std setting 28 bar
Std setting made at 4.8 L/min

5 Seals

S - Nitrile (For use with most industrial hydraulic oils)
SV - Viton (For high temperature and most special fluid applications)

Dimensions

mm (inch)

Note: For applications above 210 bar, please consult our technical department or use the steel body option.

Cartridge only

Basic Code
1GR100

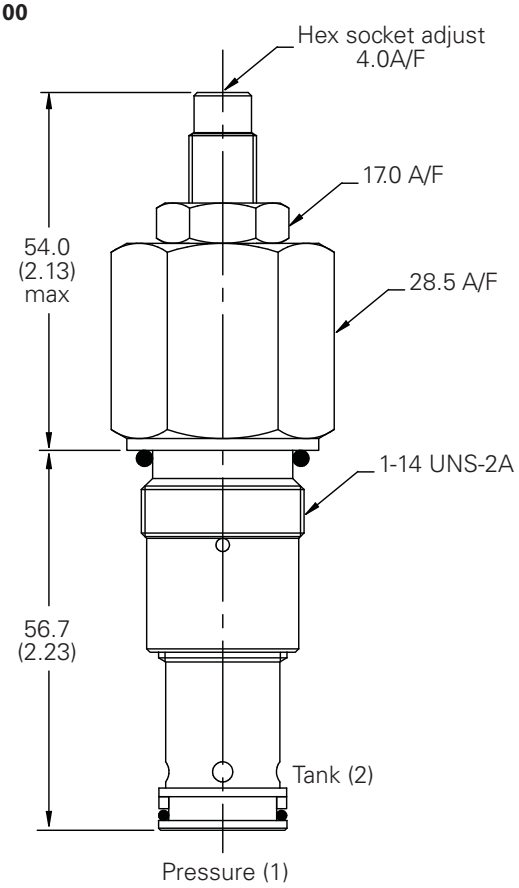

Complete valve

1/2", 3/4" Ports
Basic Code
1GR145

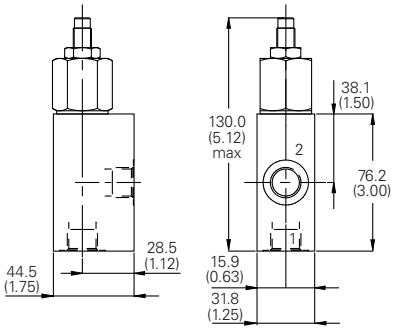

Complete valve

3/8", 1/2", 3/4" Ports
Basic Code
1GR150

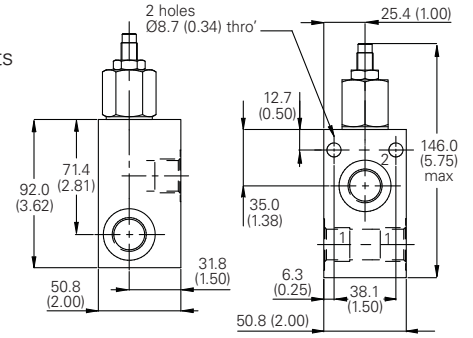

Complete valve

1" Ports
Basic Code
1GR155

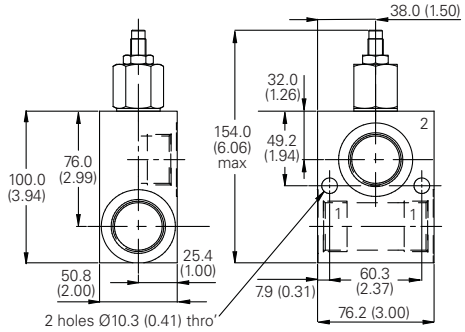

Where measurements are critical request certified drawings. We reserve the right to change specifications without notice.

1VR100 - Relief valve

Spool, ventable, pilot operated
100 L/min (26 USgpm) • 350 bar (5000 psi)

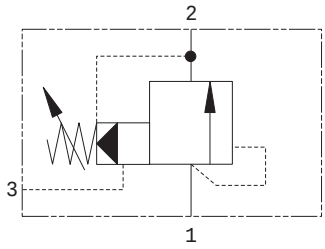

Operation

When inlet pressure exceeds the setting of the valve, the pilot section opens. The pilot flow causes a pressure imbalance across the main section spool causing it to open, allowing relief flow to tank.

When 'vented', pilot flow is referenced directly to tank, bypassing the pilot section. This flow through the vent causes a pressure imbalance, opening the main section and dumping the pump at minimum pressure drop.

Features

High accuracy of pilot operated design. Hardened working parts give long, reliable, trouble-free life. Ventable for versatility of application. Cartridge construction for installation into your own manifold.

Sectional view

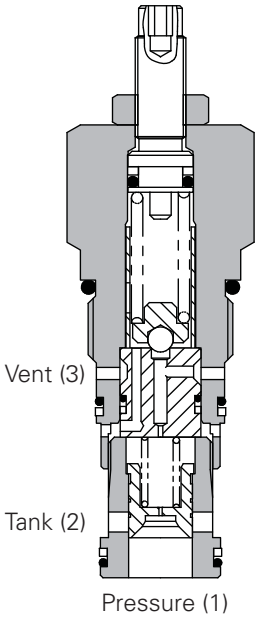

Performance data

Ratings and specifications

Figures based on: Oil Temp = 40°C Viscosity = 32 cSt (150 SUS)	
Rated flow	100 L/min (26 USgpm)
Max setting	350 bar (5000 psi)
Cartridge material	Working parts hardened and ground steel. External surfaces zinc plated.
Body material	Standard aluminium (up to 210 bar). Add suffix "377" for steel option.
Mounting position	Unrestricted
Cavity	A3146 (See Section M)
Torque cartridge into cavity	75 Nm (55 lbs ft)
Weight	1VR100 0.46 kg (1.0 lbs) 1VR150 1.13 kg (2.5 lbs)
Seal Kit	SK275 (Nitrile) SK275V (Viton®)
Recommended filtration level	BS5540/4 Class 18/13 (25 micron nominal)
Operating temp	-20° to +90°C (-22° to +194°F)
Leakage	35 milliliters/min @ 280 bar
Nominal viscosity range	5 to 500 cSt

Viton® is a registered trademark of E.I. DuPont®

Description

This is a ventable, internally pilot operated relief valve designed to limit pressure in a system. Good for continuous duty and accurate pressure control with constant or varying flows. The vent feature can be used with remote pilot section for a two-pressure system or to allow manual or remote 'unloading' of the pump.

Pressure drop curves

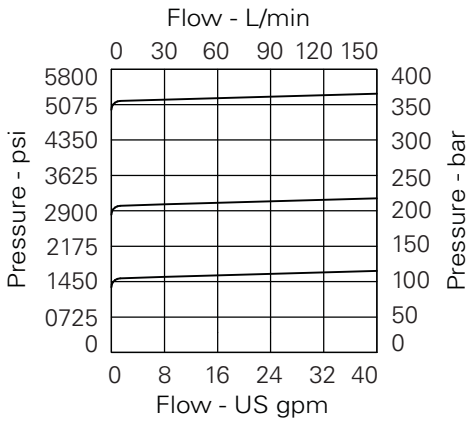

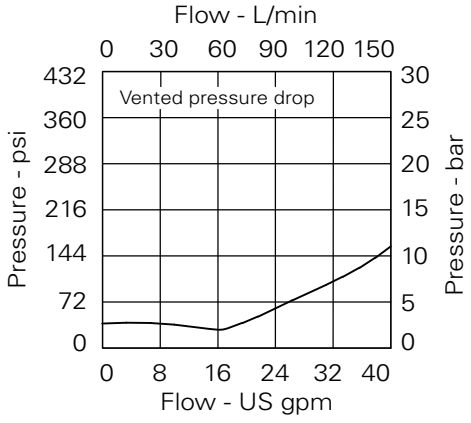

Where measurements are critical request certified drawings. We reserve the right to change specifications without notice.

Model code

1VR* – P 8W – 35 S**

1 2 3 4 5

1 Function

1VR100 - Cartridge Only
1VR150 - Cartridge and Body

2 Adjustment means

P - Leakproof Screw Adjustment
G - Tamperproof Cap
(See page E-7 for dimensions)

3 Port size

Code	Port size	Housing number - body only	
		Aluminium	Steel
6W	3/4" BSP	B4377	B4378
12T	3/4" SAE	B10785	B11554

4 Pressure range @ 14 l/min

Note: Code based on pressure in bar.
20 - 10-210 bar.
Std setting 100 bar
35 - 30-350 bar.
Std setting 210 bar
Std setting made at 14 L/min

5 Seals

S - Nitrile (For use with most industrial hydraulic oils)
SV - Viton (For high temperature and most special fluid applications)

Dimensions

mm (inch)

Cartridge only

Basic Code
1VR00

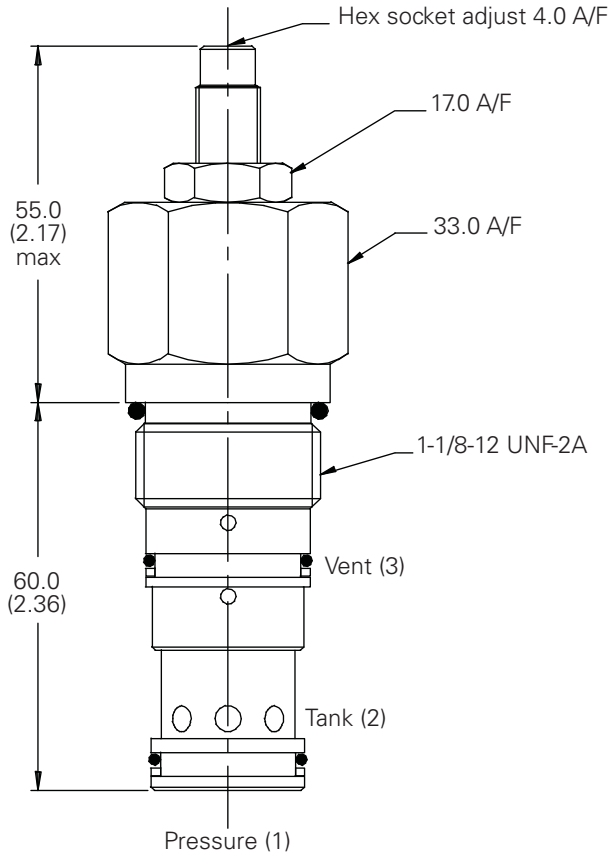

Complete valve

3/4" Ports
Basic Code
1VR150

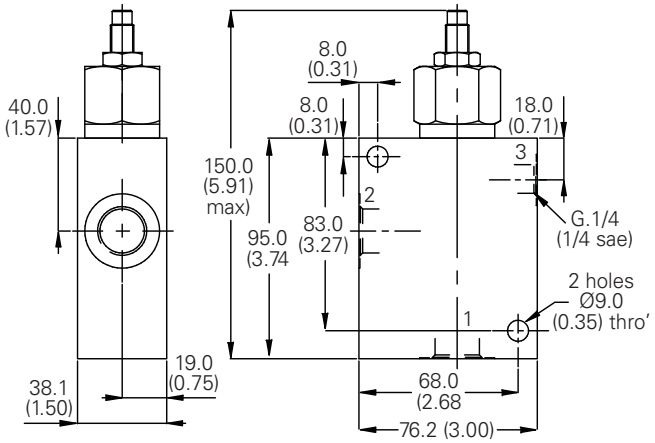

Note: For applications above 210 bar, please consult our technical department or use the steel body option.

Note: Tightening torque of "F" adjuster locknut - 20 to 25 Nm

Where measurements are critical request certified drawings. We reserve the right to change specifications without notice.

1VR200 - Relief valve

Spool, ventable, pilot operated
200 L/min (52 USgpm) • 350 bar (5000 psi)

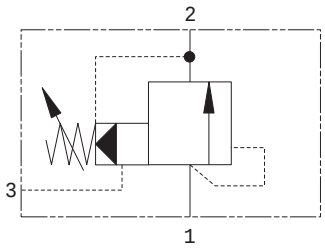

Operation

When inlet pressure exceeds the setting of the valve, the pilot section opens. The pilot flow causes a pressure imbalance across the main section spool causing it to open, allowing relief flow to tank.

When 'vented', pilot flow is referenced directly to tank, bypassing the pilot section. This flow through the vent causes a pressure imbalance, opening the main section and dumping the pump at minimum pressure drop.

Features

High accuracy of pilot operated design. Hardened working parts give long, reliable, trouble-free life. Ventable for versatility of application. Cartridge construction for installation into your own manifold.

Sectional view

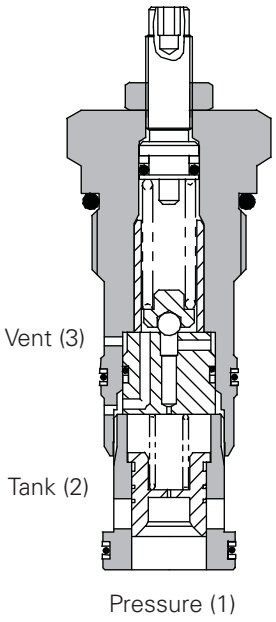

Performance data

Ratings and specifications

Figures based on: Oil Temp = 40°C Viscosity = 32 cSt (150 SUS)		
Rated flow		200 L/min (52 USgpm)
Max setting		350 bar (5000 psi)
Cartridge material		Working parts hardened and ground steel. External surfaces zinc plated,
Body material		Standard aluminium (up to 210 bar). Add suffix "377" for steel option.
Mounting position		Unrestricted
Cavity		A16102 (See Section M)
Torque cartridge into cavity		100 Nm (73 lbs ft)
Weight	1VR200	0.74 kg (1.6 lbs)
	1VR250	1.82 kg (4.0 lbs
Seal Kit		SK173 (Nitrile) SK173V (Viton®)
Recommended filtration level		BS5540/4 Class 18/13 (25 micron nominal)
Operating temp		-30° to +90°C (-22° to +194°F)
Leakage		35 milliliters/min @ 280 bar
Nominal viscosity range		5 to 500 cSt

Viton is a registered trademark of E.I. DuPont

Description

This is a ventable, internally pilot operated relief valve designed to limit pressure in a system. Good for continuous duty and accurate pressure control with constant or varying flows. The vent feature can be used with remote pilot section for a two-pressure system or to allow manual or remote 'unloading' of the pump.

Pressure drop curves

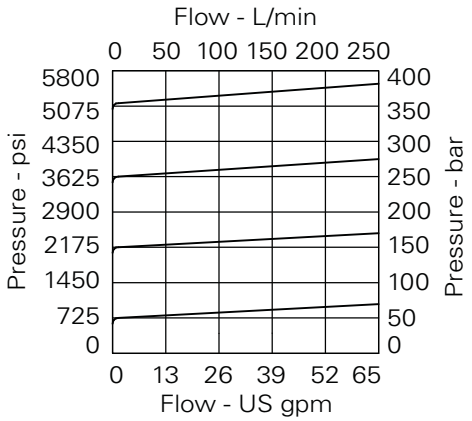

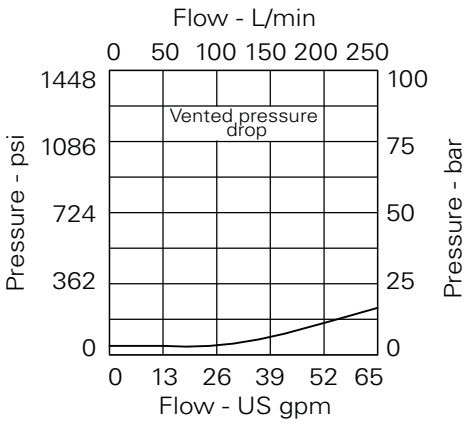

Where measurements are critical request certified drawings. We reserve the right to change specifications without notice.

Model code

1VR* – F 8W – 35 S**

1 2 3 4 5

1 Function

1VR200 - Cartridge Only
1VR250 - Cartridge and Body

2 Adjustment means

P - Leakproof Screw Adjustment
G - Tamperproof Cap
(See page E-7 for dimensions)

3 Port size

Code	Port size	Housing number - body only	
		Aluminium	Steel
8W	1" BSP	B3496	B3497
16T	1" SAE	B6807	B11555

4 Pressure range @ 14 l/min

Note: Code based on pressure in bar.
20 - 10-210 bar. Std setting 100 bar
35 - 30-350 bar. Std setting 210 bar
Std setting made at 14 L/min

5 Seals

S - Nitrile (For use with most industrial hydraulic oils)
SV - Viton (For high temperature and most special fluid applications)

Dimensions

mm (inch)

Cartridge only

Basic Code
1VR200

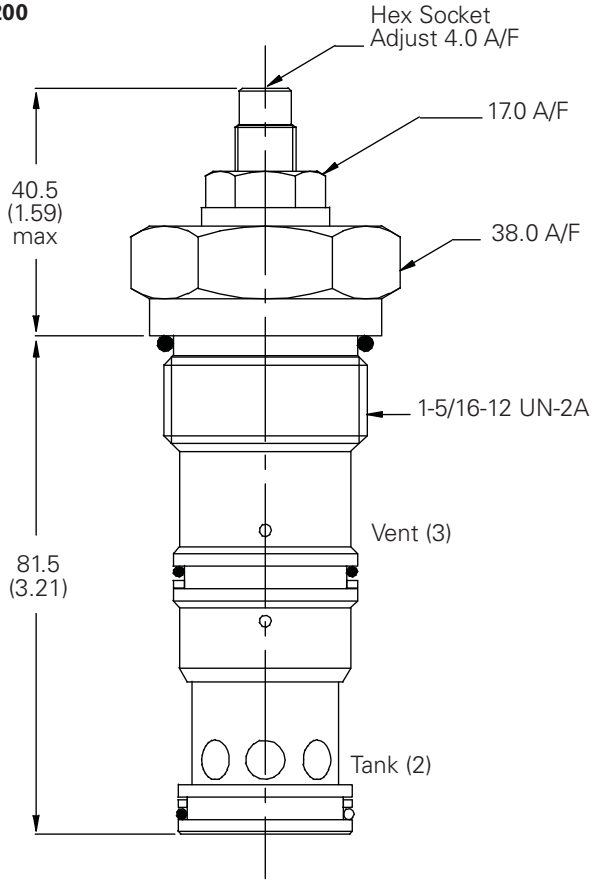

Complete valve

3/4" Ports
Basic Code
1VR250

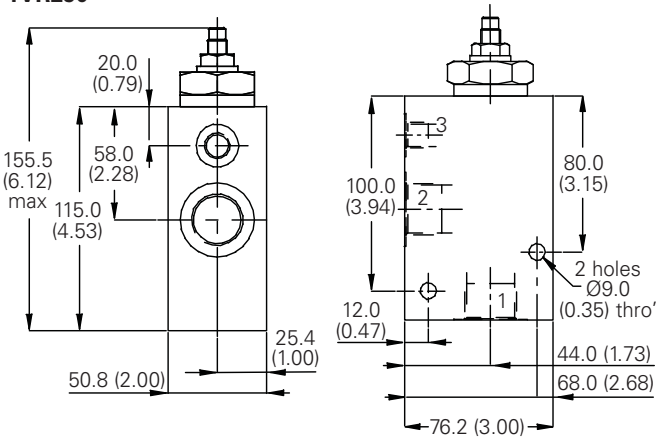

Note: For applications above 210 bar, please consult our technical department or use the steel body option.

Note: Tightening torque of "F" adjuster locknut - 20 to 25 Nm.

Where measurements are critical request certified drawings. We reserve the right to change specifications without notice.

1UL60 - Relief/unloading valve

Spool, pilot operated
60 L/min (16 USgpm) • 350 bar (5000 psi)

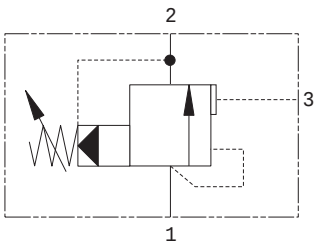

Operation

Inlet pressure is seen on the nose of the valve and system pressure (downstream of the system check valve) operates on the system pilot port. When pressure rises to the valve setting, the relief section opens and the system pressure acts on the pilot piston to hold the valve in the open position.

The ratio between the pilot piston diameter and the seat diameter to the relief valve pilot section ensures that the valve will be maintained in the fully open position until the system pressure drops to approximately 85% of the unload pressure.

Features

Valves are available as cartridges for installation into special line bodies or into custom designed Hydraulic Integrated Circuits. (NOTE: Provision must be made for a system check valve and a pilot line to signal the system pressure). Valve assemblies can be supplied complete in a line body for use in accumulator circuits. Bodied valves include a check valve and the required connection from the system to the valve pilot port.

Sectional view

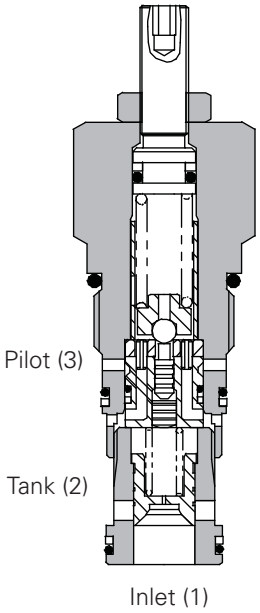

Performance data

Ratings and specifications

Figures based on: Oil Temp = 40° C Viscosity = 32 cSt (150 SUS)	
Rated flow	60 L/min (16 USgpm)
Max setting	350 bar (5000 psi)
Differential Unload/Reload	10-15%
Cartridge material	Working parts hardened and ground steel. External surfaces zinc plated.
Body material	Standard steel
Mounting position	Unrestricted
Cavity number	A3146 (See Section M)
Torque cartridge into cavity	75 Nm (55 lbs ft)
Weight	0.46 kg (1.01 lbs)
Seal kit number	SK451 (Nitrile), SK451V (Viton®)
Recommended filtration level	BS5540/4 Class 18/13 (25 micron nominal)
Operating temp	-30° to +90°C (-22° to +194°F)
Leakage	35 milliliters/min nominal
Nominal viscosity range	5 to 500 cSt

Viton is a registered trademark of E.I. DuPont

Description

These unloader valves are used to unload a pump, or pumps, to tank when pressure in a separate part of the circuit reaches a preset level. The valves will close, causing the circuit to reload, when the pressure drops to approximately 85% of the unload pressure. The most common application is to maintain a pressure in an accumulator which may be used in an emergency to operate an essential hydraulic function. (Eg, a brake circuit). The 1PUL** valve has a drain port to ensure correct valve function while allowing the bypassed oil to be used for a secondary circuit requirement.

Pressure drop curves

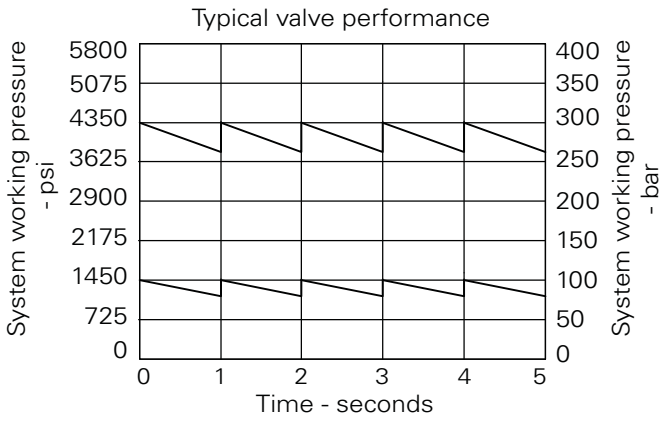

Where measurements are critical request certified drawings. We reserve the right to change specifications without notice.

1UL60 - Relief/unloading valve

Spool, pilot operated
60 L/min (16 USgpm) • 350 bar (5000 psi)

Model code

1UL ** – **P** **4W** – **35** **S** – **377**

1 2 3 4 5 6

1 Function

1UL60 - Cartridge only
1UL65 - Cartridge and body

2 Adjustment means

P - Leakproof screw adjustment
G - Tamperproof cap
(See page E-7 for dimensions)

3 Port size

Code	Port size	Housing number - body only	
		Aluminium	**Steel**
4W	1/2" BSP		BXP24103-4W-S-377
8T	1/2" SAE	BXP24103-8T-S	

4 Pressure range @ 4.8 l/min

Note: Code based on pressure in bar.
10 - 40-100 bar. Std setting 75 bar
35 - 15-350 bar. Std setting 200 bar
20 - 70-210 bar. Std setting 100 bar

5 Seals

S - Nitrile (for use with most industrial hydraulic oils)
SV - Viton (For high temperature and most special fluid applications)

6 Body material

377 - Steel
Omit for aluminium (up to 210 bar)

Dimensions

mm (inch)

Cartridge only

Basic Code
1UL60

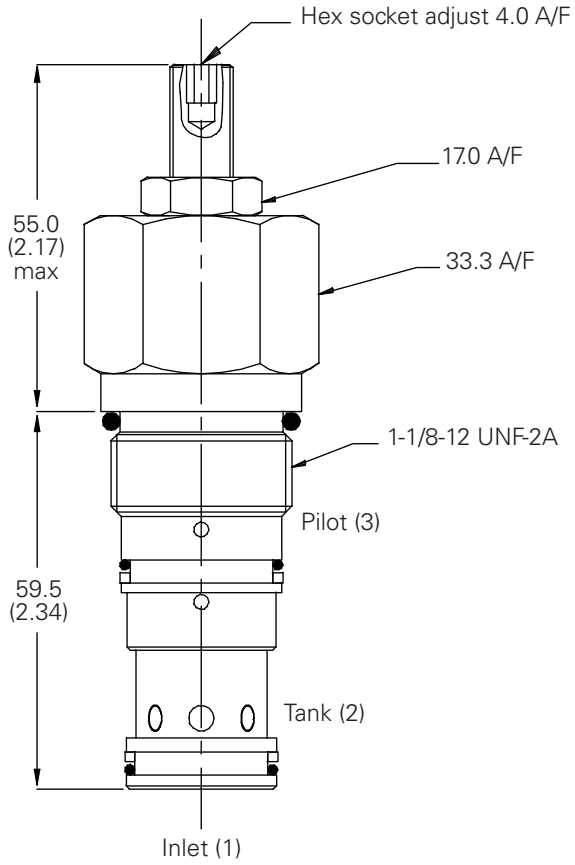

Cartridge only

1/2" Ports
Basic Code
1UL65
With System Check

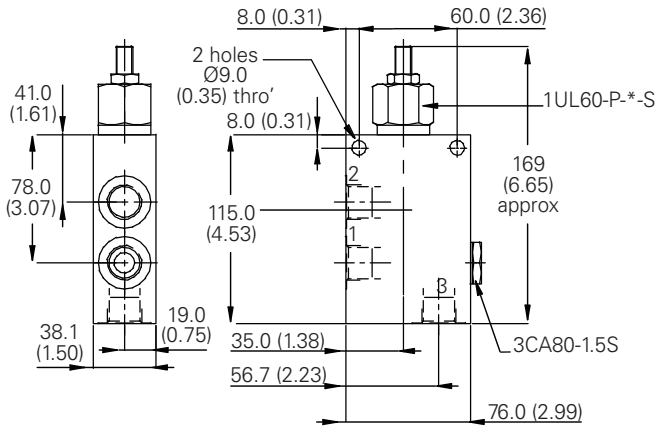

Note: For applications above 210 bar (3000 psi) please consult over technical department or use the steel body option.

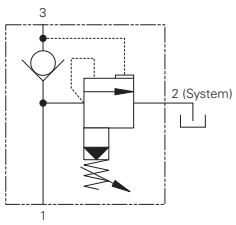

Where measurements are critical request certified drawings. We reserve the right to change specifications without notice.

1PUL60 - Relief/unloading valve

Spool, pilot operated
60 L/min (16 USgpm) • 350 bar (5000 psi)

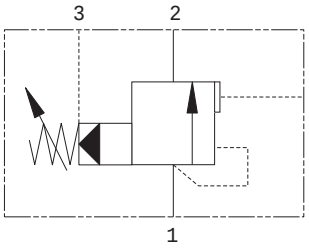

Operation

Inlet pressure is seen on the nose of the valve and system pressure (downstream of the system check valve) operates on the system pilot port. When pressure rises to the valve setting, the relief section opens and the system pressure acts on the pilot piston to hold the valve in the open position.

The ratio between the pilot piston diameter and the seat diameter to the relief valve pilot section ensures that the valve will be maintained in the fully open position until the system pressure drops to approximately 85% of the unload pressure.

Features

Valves are available as cartridges for installation into special line bodies or into custom designed Hydraulic Integrated Circuits. (NOTE: Provision must be made for a system check valve and a pilot line to signal the system pressure). Valve assemblies can be supplied complete in a line body for use in accumulator circuits. Bodied valves include a check valve and the required connection from the system to the valve pilot port.

Sectional view

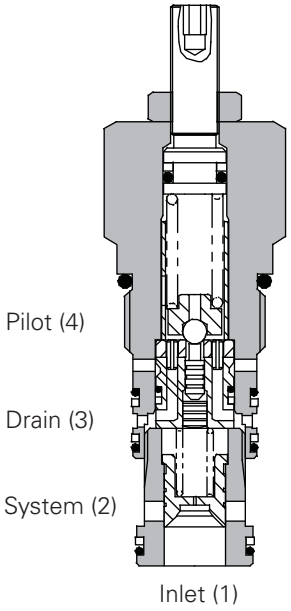

Performance data

Ratings and specifications

Figures based on: Oil Temp = 40° C Viscosity = 32 cSt (150 SUS)		
Rated flow		60 L/min (16 USgpm)
Max setting		350 bar (5000 psi)
Differential Unload/Reload		10-15%
Cartridge material		Working parts hardened and ground steel. External surfaces zinc plated.
Body material		Standard steel
Mounting position		Unrestricted
Cavity number		A12088 (See Section M)
Torque cartridge into cavity		75 Nm (55 lbs ft)
Weight	1PUL60	0.46 kg (1.01 lbs)
	1PUL65	0.8 kg (1.76 lbs)
Seal kit number	1PUL60	SK750 (Nitrile), SK750V (Viton®)
Recommended filtration level		BS5540/4 Class 18/13 (25 micron nominal)
Operating temp		-30° to +90°C (-22° to +194°F)
Leakage		35 milliliters/min nominal
Nominal viscosity range		5 to 500 cSt

Viton is a registered trademark of E.I. DuPont

Description

These unloader valves are used to unload a pump, or pumps, to tank when pressure in a separate part of the circuit reaches a preset level. The valves will close, causing the circuit to reload, when the pressure drops to approximately 85% of the unload pressure. The most common application is to maintain a pressure in an accumulator which may be used in an emergency to operate an essential hydraulic function. (Eg, a brake circuit). The 1PUL60 valve has a drain port to ensure correct valve function while allowing the bypassed oil to be used for a secondary circuit requirement.

Pressure drop curves

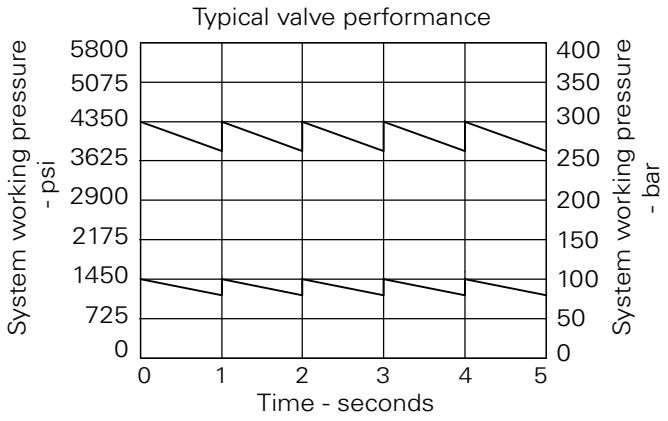

Where measurements are critical request certified drawings. We reserve the right to change specifications without notice.

1PUL60 - Relief/unloading valve

Spool, pilot operated
60 L/min (16 USgpm) • 350 bar (5000 psi)

Model code

1PUL – P 4W – 35 S – 377**

1 2 3 4 5 6

1 Function

1PUL60 - Cartridge only
1PUL6 - Cartridge and body

2 Adjustment means

P - Leakproof screw adjustment
G - Tamperproof cap
(See page E-7 for dimensions)

3 Port sizes

Code	Port size	Housing number - Sub Assembly	
		Aluminium	Steel
4W	1/2" BSP		BXP4046-4W-S-377
8T	1/2" SAE	BXP24046-8T-S	

4 Pressure range @ 4.8 L/min

Note: Code based on pressure in bar.
10 - 40-100 bar. Std setting 75 bar
20 - 70-210 bar. Std setting 100 bar
35 - 50-350 bar. Std setting 200 bar

Note: For applications above 210 bar (3000 psi) please consult over technical department or use the steel body option.

5 Seals

S - Nitrile (for use with most industrial hydraulic oils)
SV - Viton (For high temperature and most special fluid applications)

6 Body material

377 - Steel
Omit for aluminium (up to 210 bar)

E

Dimensions

mm (inch)

Cartridge only

Basic Code
1PUL60

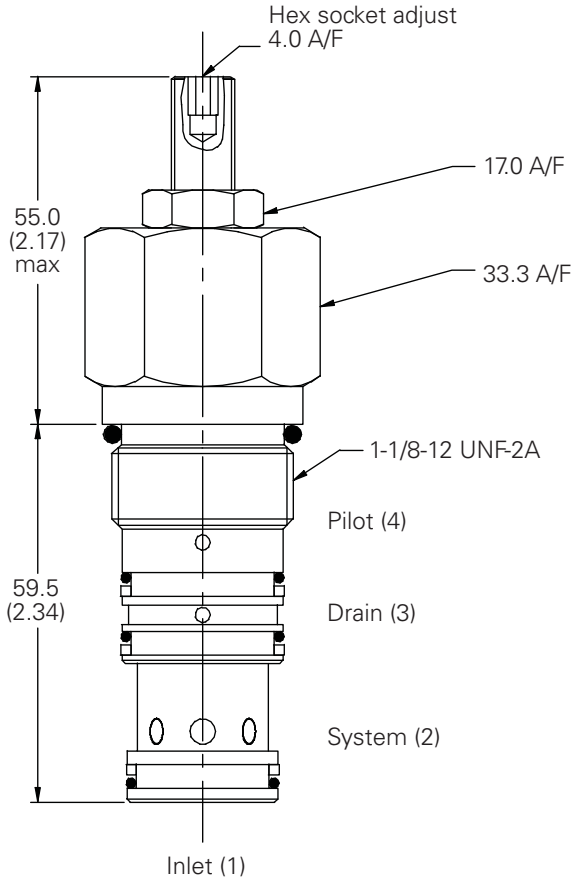

Cartridge only

1/2" Ports
Basic Code
1PUL65
With System Check

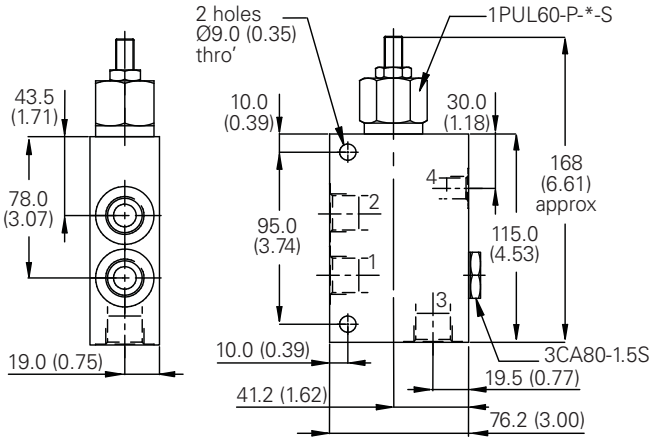

Typical Connections
Port 1 Pressure
Port 2 System
Port 3 Accumulator
Port 4 Drain

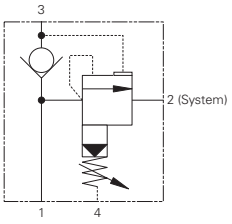

Where measurements are critical request certified drawings. We reserve the right to change specifications without notice.

1PUL200 - Relief/unloading valve

Spool, pilot operated
200 L/min (52 USgpm) • 350 bar (5000 psi)

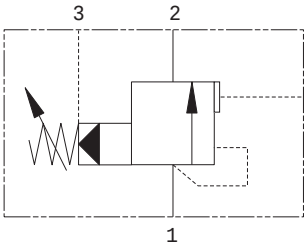

Operation

Inlet pressure is seen on the nose of the valve and system pressure (downstream of the system check valve) operates on the system pilot port. When pressure rises to the valve setting, the relief section opens and the system pressure acts on the pilot piston to hold the valve in the open position.

The ratio between the pilot piston diameter and the seat diameter to the relief valve pilot section ensures that the valve will be maintained in the fully open position until the system pressure drops to approximately 85% of the unload pressure.

Features

Valves are available as cartridges for installation into special line bodies or into custom designed Hydraulic Integrated Circuits. (NOTE: Provision must be made for a system check valve and a pilot line to signal the system pressure). Valve assemblies can be supplied complete in a line body for use in accumulator circuits. Bodied valves include a check valve and the required connection from the system to the valve pilot port.

Sectional view

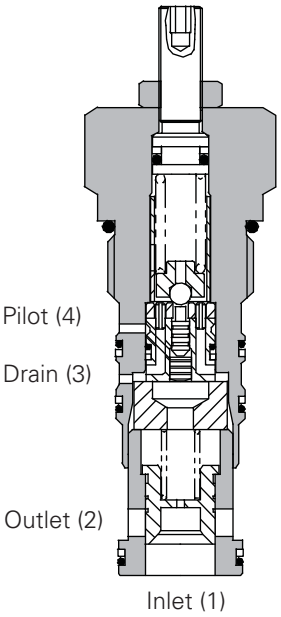

Performance data

Ratings and specifications

Figures based on: Oil Temp = 40° C Viscosity = 32 cSt (150 SUS)	
Rated flow	200 L/min (52 USgpm)
Max setting	350 bar (5000 psi)
Differential unload/reload	10-15%
Cartridge material	Working parts hardened and ground steel. External surfaces zinc plated.
Body material	Standard steel
Mounting position	Unrestricted
Cavity number	A3145 (See Section M)
Torque cartridge into cavity	100 Nm (73 lbs ft)
Weight	1PUL200 0.74 kg (1.63 lbs) 1PUL250 6.8 kg (14.96 lbs)
Seal kit number	1PUL200 SK670 (Nitrile) SK670V (Viton®) 1PUL250 SK452 (Nitrile) SK452V (Viton)
Recommended filtration level	BS5540/4 Class 18/13 (25 micron nominal)
Operating temp	-30°C to +90°C (-22° to 194°F)
Leakage	35 milliliters/min @ 210 bar
Nominal viscosity range	5 to 500 cSt

Viton is a registered trademark of E.I. DuPont

Description

These unloader valves are used to unload a pump, or pumps, to tank when pressure in a separate part of the circuit reaches a pre-set level. The valves will close, causing the circuit to reload, when the pressure drops to approximately 85% of the unload pressure. The most common application is to maintain a pressure in an accumulator which may be used in an emergency to operate an essential hydraulic function. (Eg, a brake circuit). The 1PUL** valve has a drain port to ensure correct valve function while allowing the bypassed oil to be used for a secondary circuit requirement.

Pressure drop curves

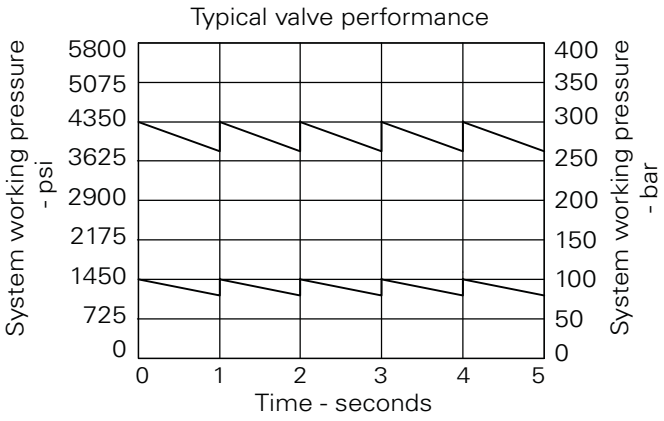

Where measurements are critical request certified drawings. We reserve the right to change specifications without notice.

1PUL200 - Relief/unloading valve

Spool, pilot operated
200 L/min (52 USgpm) • 350 bar (5000 psi)

Model code

1PUL* – P 8W – 35 S – 377**

1 2 3 4 5 6

1 Basic code

1PUL200 - Cartridge only
1PUL250 - Cartridge and body

2 Adjustment means

P - Leakproof screw adjustment
G - Tamperproof cap
(See page 12-102 for dimensions)

3 Port sizes - Bodied valves only

Code	Port size	Housing number - Sub assembly	
		Aluminium	**Steel**
8W	1" BSP 1/4" BSP Drain Port		BXP23466-8W-S-377
16T	1" SAE 1/4" SAE Drain Port	BXP23466-16T-S	BXP23466-16-S-377

4 Pressure Range @ 4.8 L/min

Note: Code based on pressure in bar.
20 - 30-210 bar. Std setting 100 bar
35 - 50-350 bar. Std setting 200 bar

Note: For applications above 210 bar please consult our technical department or use the steel body option.

5 Seals

S - Nitrile (For use with most industrial hydraulic oils)
SV - Viton (For high temperature and most special fluid applications)

6 Body material

377 - Steel
Omit for aluminium (up to 210 bar)

Dimensions

mm (inch)

Cartridge only

Basic Code
1PUL200

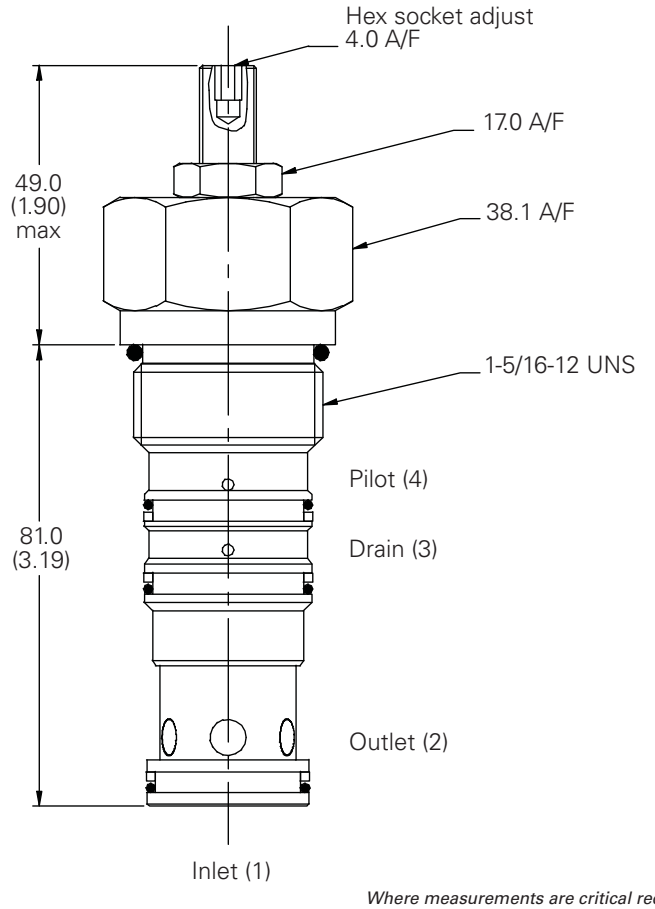

Complete valve

1" Port
Basic Code
1PUL250
With System Check

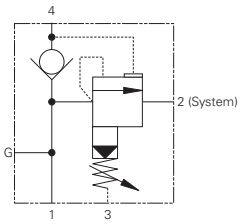

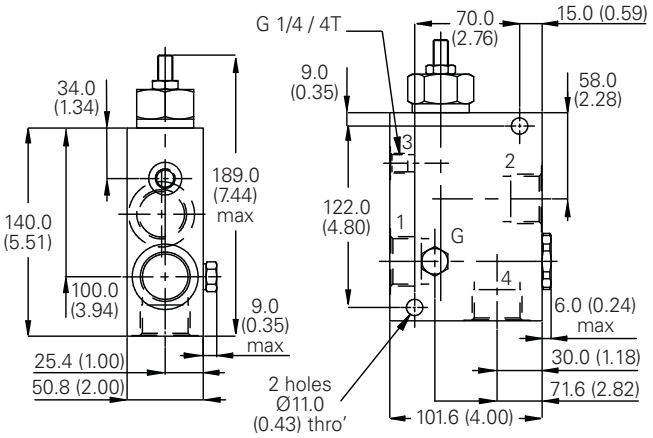

Where measurements are critical request certified drawings. We reserve the right to change specifications without notice.

E

1CLLR50 - Dual relief valve

Poppet, direct acting, differential area
50 L/min (12 USgpm) • 250 bar (3500 psi)

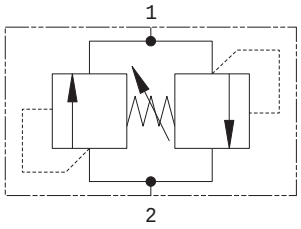

Operation

Pressure acts over one of two differential areas forcing the poppet back allowing relief flow to the other port.

This being a single cartridge is ideal for mounting on to a motor in a special housing.

Features

Single cartridge relieving in both directions cutting down space requirements, giving full adjustment through its range on both pressures at the same time.

Sectional view

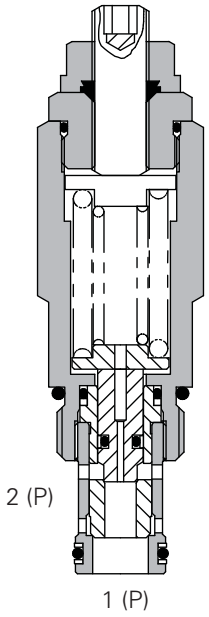

Performance data

Ratings and specifications

Figures based on: Oil Temp = 40° C Viscosity = 32 cSt (150 SUS)		
Rated flow		50 L/min (12 USgpm)
Max pressure		250 bar (3500 psi)
Cartridge material		Working parts hardened and ground steel. External steel surfaces zinc plate.
Body material		Standard aluminium (up to 210 bar*). Add suffix "377" for steel option.
Mounting position		Unrestricted
Cavity number		C-10-2 (See Section M)
Torque cartridge into cavity		60 Nm (44 lbs ft)
Weight	1CLLR50	0.23 kg (0.5 lbs)
	1CLLR55	0.8 kg (1.8 lbs))
Seal kit number		SK614 (Nitrile) SK614V (Viton®)
Recommended filtration level		BS5540/4 Class 18/13 (25 micron nominal)
Operating temp		-30° to +90°C (-22° to +194°F)
Leakage		5 milliliters/min
Nominal viscosity range		5 to 500 cSt

Viton is a registered trademark of E.I. DuPont

Description

This is a direct acting bi-directional relief valve designed to protect both lines in a circuit from over pressurization by relieving oil to the other line. Ideal for use with motors or directional valves as an emergency relief. Differential area, fast acting, poppet valve.

Pressure drop curves

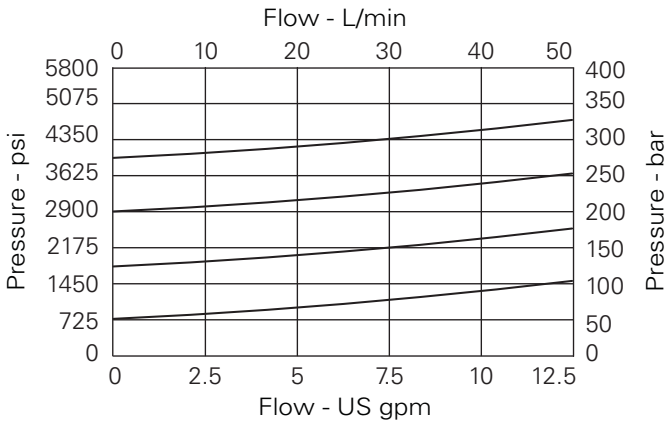

Where measurements are critical request certified drawings. We reserve the right to change specifications without notice.

1CLLR50 - Dual relief valve

Poppet, direct acting, differential area
50 L/min (12 USgpm) • 250 bar (3500 psi)

Model code

1CLLR – **F** **3W** – **25** **S**

1 2 3 4 5

1 Function

1CLLR50 - Cartridge only
1CLLR55 - Cartridge and body

2 Adjustment means

F - Screw adjustment

3 Port sizes

Code	Port size	Housing number - body only	
		Aluminium Single	Steel Single
3W	3/8" BSP	B19053	
4W	1/2" BSP	B19356	B20601
8T	1/2" SAE	B19402	

4 Pressure range

Note: Code based on pressure in bar.

25 - 75-200 bar.
Std setting 120 bar

5 Seals

S - Nitrile (For use with most industrial hydraulic oils)

SV - Viton® (For high temperature and most special fluid applications)

E

Dimensions

mm (inch)

Cartridge only

Basic code
1CLLR50

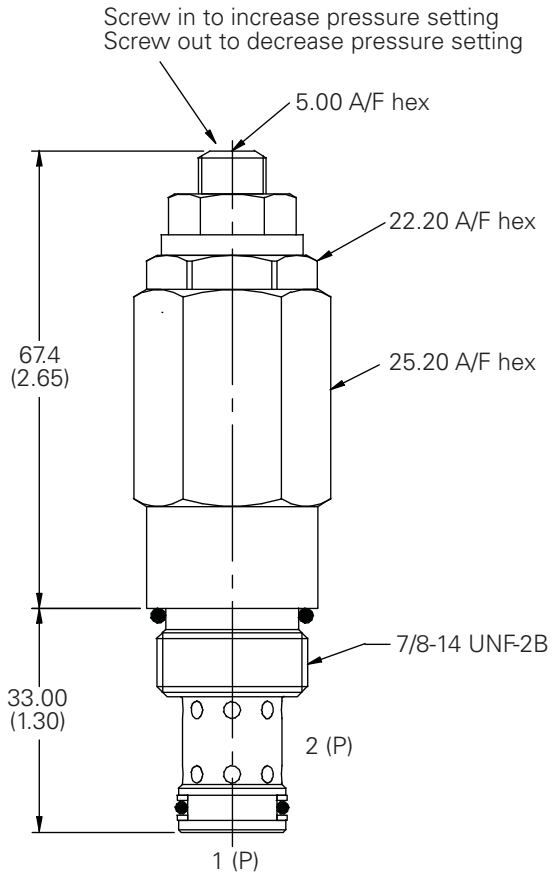

Complete valve

3/8", 1/2" Ports
Basic Code
1CLLR55

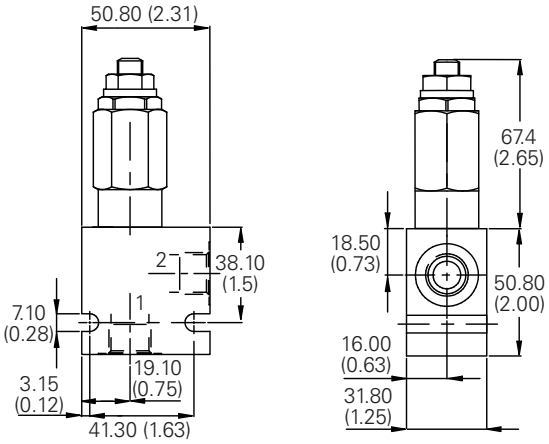

Note: For applications above 210 bar please consult our technical department or use the steel body option.

Where measurements are critical request certified drawings. We reserve the right to change specifications without notice.

1CLLR100 - Dual relief valve

Poppet, direct acting, differential area
150 L/min (40 USgpm) • 350 bar (5000 psi)

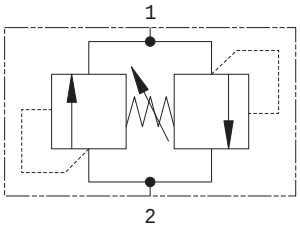

Operation

Pressure acts over one of two differential areas forcing the poppet back allowing relief flow to the other port.

This being a single cartridge is ideal for mounting on to a motor in a special housing.

Features

Single cartridge relieving in both directions cutting down space requirements, giving full adjustment through its range on both pressures at the same time.

Sectional view

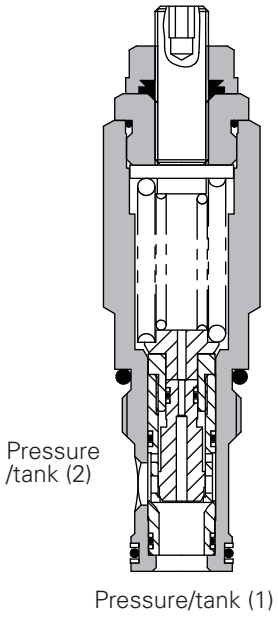

Performance data

Ratings and specifications

Figures based on: Oil Temp = 40° C Viscosity = 32 cSt (150 SUS)		
Rated flow		150 L/min (40 USgpm)
Max pressure		350 bar (5000 psi)
Cartridge material		Working parts hardened and ground steel.
		External steel surfaces black oxide.
Body material		Standard aluminium (up to 210 bar*).
		Add suffix "377" for steel option.
Mounting position		Unrestricted
Cavity number		A878 (See Section M)
Torque cartridge into cavity		60 Nm (44 lbs ft)
Weight	1CLLR100	0.23 kg (0.5 lbs)
	1CLLR150	0.8 kg (1.8 lbs)
	1CLLR155	1.1 kg (2.4 lbs)
Seal kit number		SK614 (Nitrile), SK614V (Viton®)
Recommended filtration level		BS5540/4 Class 18/13 (25 micron nominal)
Operating temp		-30° to +90°C (-22° to +194°F)
Leakage		5 milliliters/min nominal (5 dpm)
Nominal viscosity range		5 to 500 cSt

Viton® is a registered trademark of E.I. DuPont

Description

This is a direct acting bi-directional relief valve designed to protect both lines in a circuit from over pressurization by relieving oil to the other line. Ideal for use with motors or directional valves as an emergency relief. Differential area, fast acting, poppet valve.

Pressure drop curves

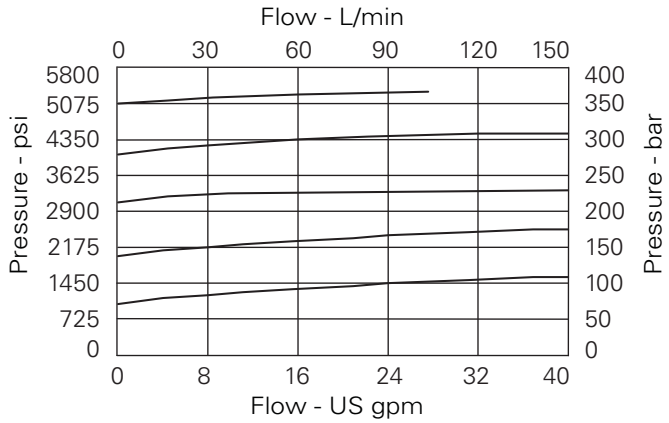

Where measurements are critical request certified drawings. We reserve the right to change specifications without notice.

1CLLR100 - Dual relief valve

Poppet, direct acting, differential area
150 L/min (40 USgpm) • 350 bar (5000 psi)

Model code

1CLLR* – F 6W – 35 S**

1 2 3 4 5

1 Basic code

1CLLR100 - Cartridge only
1CLLR150 - Cartridge and body
1CLLR155 - Cartridges and body through ported

2 Adjustment means

F - Screw adjustment

3 Port sizes

Code	Port size	Housing number - Body only			
		Aluminium 1CLLR150	Steel 1CLLR150	Aluminium 1CLLR155	Steel 1CLLR155
6W	3/4" BSP	B1067	B5614	B2216	B7147
8W	1" BSP	B1069	B542		
12T	3/4" SAE	B4409		B10623	
16T	1" SAE	B10827	B11801		

4 Pressure range @ 14 l/min

Note: Code based on pressure in bar.
35 - 114-350 bar.
Std setting 280 bar

5 Seals

S - Nitrile (For use with most industrial hydraulic oils)

SV - Viton® (For high temperature and most special fluid applications)

Dimensions

mm (inch)

Cartridge only

Basic Code
1CLLR100

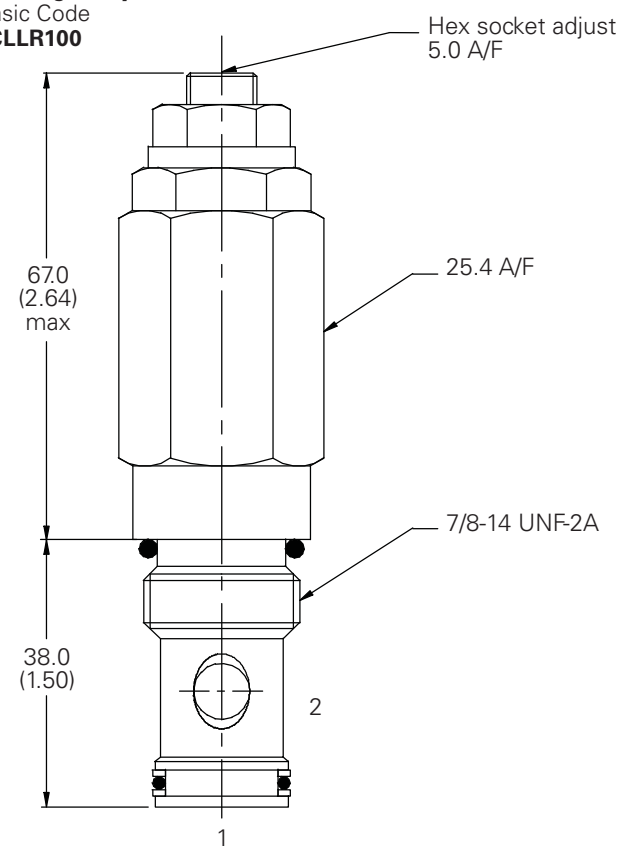

Note: Tightening torque of "F" adjuster locknut - 20 to 25 Nm

Note: For applications above 210 bar please consult our technical department or use the steel body option.

Complete valve

3/4". 1" Ports
Basic Code
1CLLR150

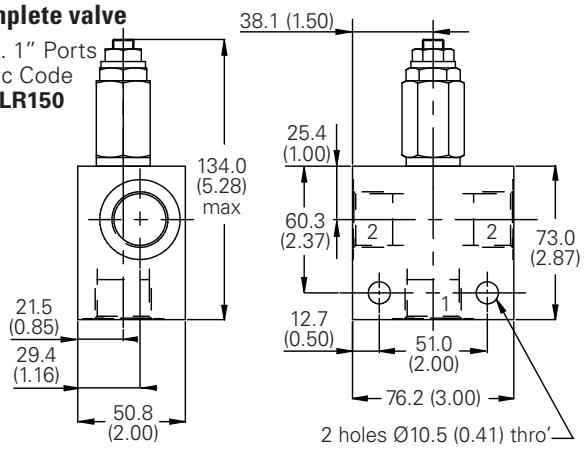

Complete valve

3/4" Ports
Basic Code
1CLLR155

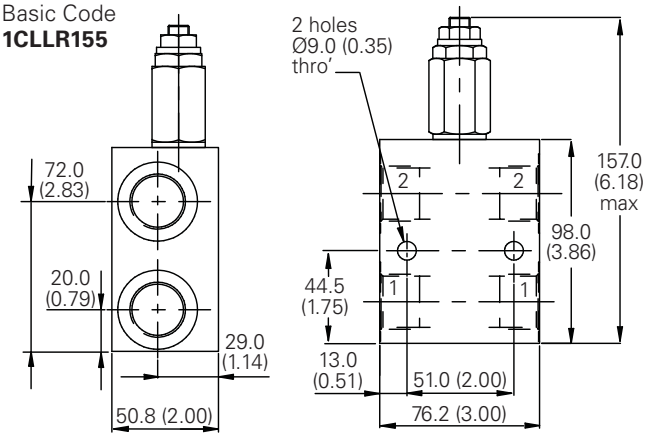

Where measurements are critical request certified drawings. We reserve the right to change specifications without notice.

E

PSV2-8 - Pressure sequence valve

Spool, direct acting normally closed, internal drain
23 L/min (6 USgpm) • 210 bar (3000 psi)

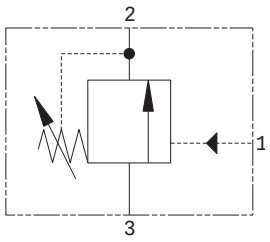

Operation

When a pre-set pilot pressure is reached the spool moves back against the spring opening the line between inlet and outlet.

When the pilot pressure falls the valve will return to its normal position.

Features

Cartridge design enabling speedy servicing when mounted in a body or in a composite manifold.

Sectional view

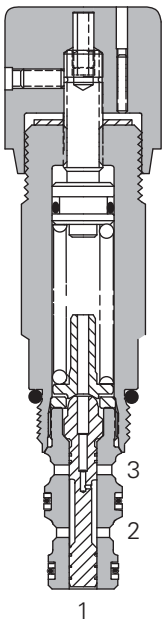

Performance data

Ratings and specifications

Performance data is typical with fluid at 21,8 cSt (105 SUS) and 49° C (120° F)	
Typical application pressure (all ports)	210 bar (3000 psi)
Cartridge fatigue pressure (infinite life)	210 bar (3000 psi)
Sequence pressure ranges	13 – 3,4–90 bar (50–1300 psi) 30 – 35–210 bar (500–3000 psi)
Rated flow	23 L/min (6 USgpm)
Reseat pressure	More than 90% of cracking pressure
Internal leakage	82 cm^3/min. (5 in^3/min) @ 210 bar (3000 psi)
Hysteresis	less than 3 bar (45 psi)
Temperature range	-40° to 120°C (-40° to 248°F)
Cavity	C–8–3
Fluids	All general purpose hydraulic fluids such as: MIL–H–5606, SAE 10, SAE 20, etc.
Filtration	Cleanliness Code 18/**16**/**13**
Standard housing materials	Aluminum
Weight cartridge only	0,21 kg (0.47 lbs)
Seal kits	02–160755 Buna–N 02–160756 Viton®

Viton is a registered trademark of E.I. DuPont

Description

This valve provides a means of opening a pressure line when a predetermined pilot pressure is reached in a normally closed form.

The valve can be used in any pilot or small flow system as a remotely operated sequence valve.

Pressure drop curve

Port 3 to 2,
valve fully open

Cartridge only

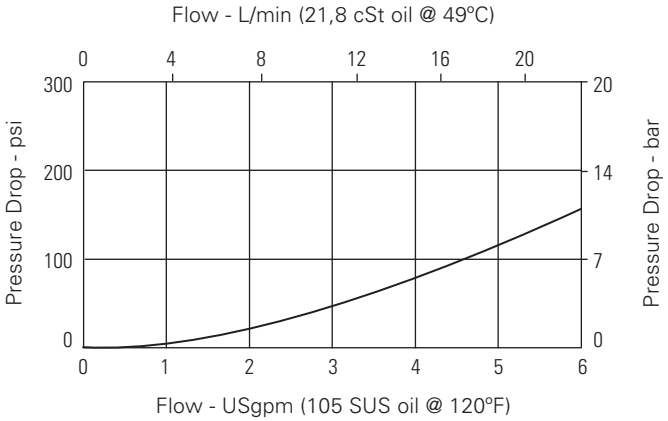

Where measurements are critical request certified drawings. We reserve the right to change specifications without notice.

PSV2-8 - Pressure sequence valve

Spool, direct acting normally closed, internal drain
23 L/min (6 USgpm) • 210 bar (3000 psi)

Model code

PSV2 – 8 (V) – * – (*) – ** – **/ ** – 00

1 2 3 4 5 6 7 8 9

1 Function
PSV2 - Pressure sequence

2 Size
8 - 8 size

3 Seal material
Blank - Buna-N
V - Viton®

4 Adjustment
C - Cap
K - Knob
S - Screw

5 Valve housing material
Omit for cartridge only
A - Aluminum
Maximum operating pressure 210 bar (3000 psi)

6 Port size
0 - Cartridge only

Code	Port size	Housing number
		Aluminum Fatigue rated
4T	SAE 4	02–160741
6T	SAE 6	02–160742
2G	1/4" BSPP	02–160739
3G	3/8" BSPP	02–160740

See section J for housing.

7 Sequence pressure range
Note: Code based on pressure in psi.
13 - 3,4-90 bar (50-1300 psi)
30 - 35-210 bar (500-3000 psi)

8 Pressure setting
Optional - Specify in 100 psi increments. If not specified, set at:
13 - 44 bar (650 psi)
30 - 100 bar (1500 psi)

9 Special features
00 - None
(Only required if valve has special features, omitted if "00.")

Dimensions
mm (inch)

Torque cartridge in aluminum or steel housing 34-41 Nm (25-30 ft. lbs)

Cartridge only

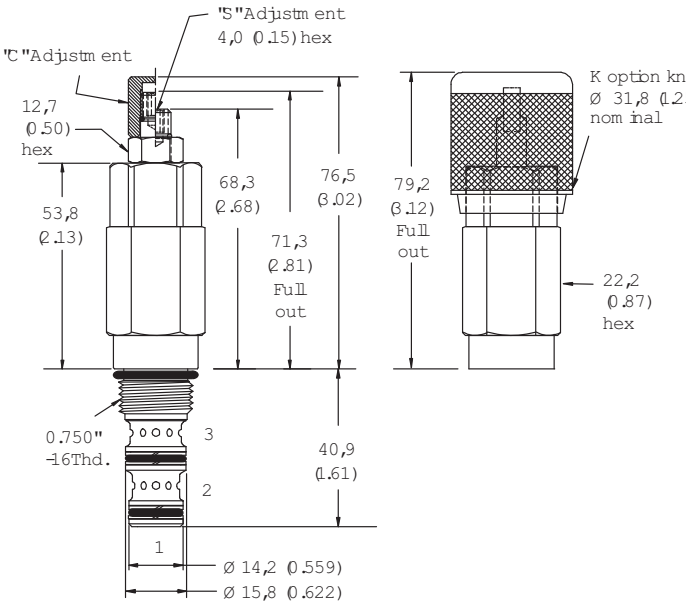

Installation drawing

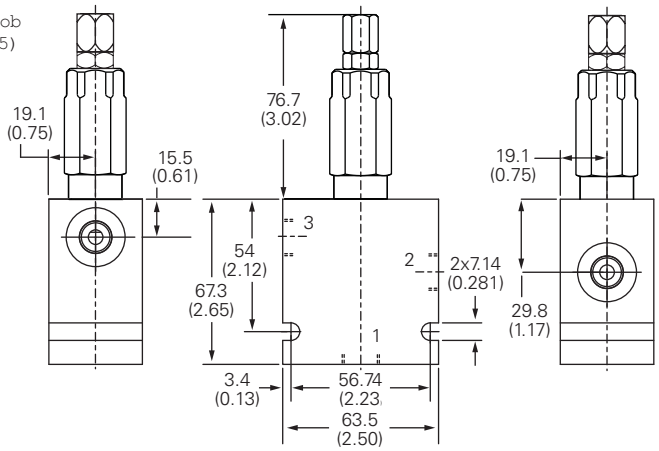

Where measurements are critical request certified drawings. We reserve the right to change specifications without notice.

E

PSV4-8 - Pressure sequence valve

Spool, direct acting normally closed, internal drain
15 L/min (4 USgpm) • 350 bar (5000 psi)

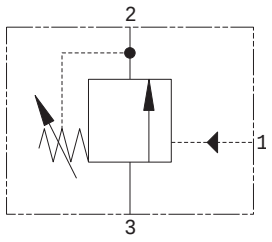

Operation

When a pre-set pilot pressure is reached the spool moves back against the spring opening the line between inlet and outlet.

When the pilot pressure falls the valve will return to its normal position.

Features

Cartridge design enabling speedy servicing when mounted in a body or in a composite manifold. Working pressure 350 bar.

Sectional view

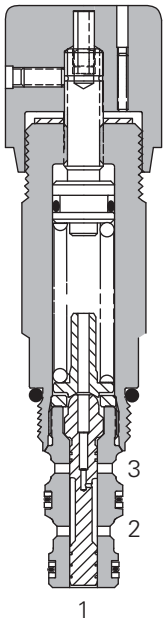

Performance data

Ratings and specifications

Performance data is typical with fluid at 21,8 cSt (105 SUS) and 49° C (120° F)	
Typical application pressure (all ports)	350 bar (5000 psi)
Cartridge fatigue pressure (infinite life)	280 bar (4000 psi)
Rated flow	15 L/min (4 USgpm)
Sequence pressure ranges	15 – 28–100 bar (400–1500 psi) 30 – 3,4–210 bar (50–3000 psi) 50 – 124–350 bar (1800–5000 psi)
Reseat pressure	More than 90% of cracking pressure
Internal leakage	5 in3/min @ 210 bar (3000 psi)
Hysteresis	less than 3 bar (45 psi)
Temperature range	-40° to 120°C (-40° to 248°F).
Cavity	C–8–3
Fluids	All general purpose hydraulic fluids such as: MIL–H–5606, SAE 10, SAE 20, etc.
Filtration	Cleanliness Code 18/**16**/**13**
Standard housing materials	Aluminum or steel
Weight cartridge only	0,21 kg (0.47 lbs)
Seal kits	02–160755 Buna N 02–160756 Viton®

Viton is a registered trademark of E.I. DuPont

Description

This valve provides a means of opening a pressure line when a predetermined pilot pressure is reached in a normally closed form.

The valve can be used in any pilot or small flow system as a remotely operated sequence valve.

Pressure drop curve

Port 3 to 2,
valve fully open

Cartridge only

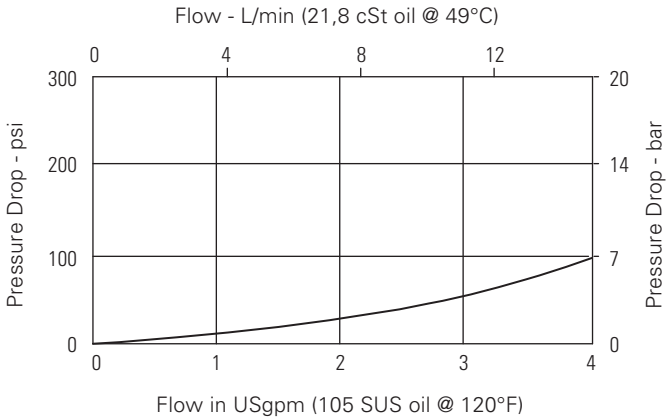

Where measurements are critical request certified drawings. We reserve the right to change specifications without notice.

PSV4-8 - Pressure sequence valve

Spool, direct acting normally closed, internal drain
15 L/min (4 USgpm) • 350 bar (5000 psi)

Model code

PSV4 – 8 (V) – * – (*) – ** – **/ ** – 00

1 2 3 4 5 6 7 8 9

1 Function

PSV4 - Pressure sequence valve

2 Size

8 - 8 size

3 Seal material

Blank - Buna-N
V - Viton®

4 Adjustment

C - Cap
K - Knob
S - Screw

5 Valve housing material

Omit for cartridge only
S - Steel
A - Aluminum

6 Port size

0 - Cartridge only

Code	Port size	Housing number	
4T	SAE 6	02–160741	02–160745
6T	SAE 6	02–160742	02–160746
2G	1/4" BSPP	02–160739	02–160743
3G	3/8" BSPP	02–160740	02–160744

See section J for housing details.

7 Sequence pressure range

Note: Code based on pressure in psi.
15 - 28-100 bar (400-1500 psi)
30 - 34-210 bar (500-3000 psi)
50 - 124-350 bar (1800-5000 psi)

8 Pressure setting

Optional - Specify in 100 psi increments. If not specified, set at:

15 - 52 bar (750 psi)
30 - 100 bar (1500 psi)

9 Special features

00 - None
(Only required if valve has special features, omitted if "00.")

⚠ Warning

Aluminum housings can be used for pressures up to 210 bar (3000 psi). Steel housings must be used for operating pressures above 210 bar (3000 psi).

Dimensions

mm (inch)

Torque cartridge in aluminum or steel housing 34-41 Nm (25-30 ft. lbs)

Cartridge only

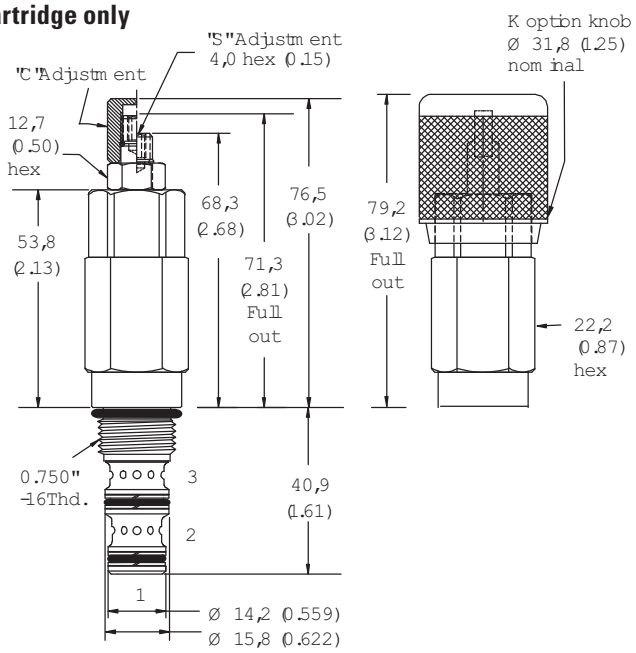

Installation drawing (Steel)

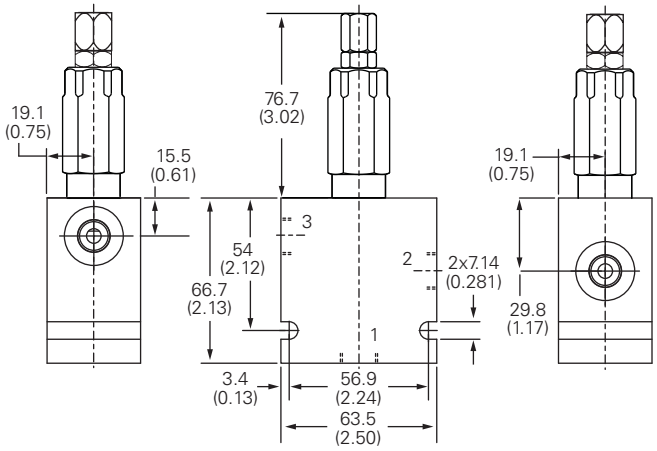

Where measurements are critical request certified drawings. We reserve the right to change specifications without notice.

E

PSV8-10 Pressure sequence valve

Spool direct acting, normally open, external drain
23 L/min (6 USgpm) • 210 bar (3000 psi)

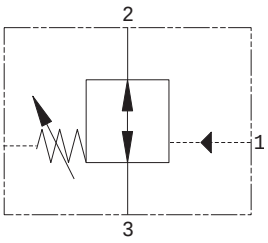

Operation

When a pre-set pilot pressure is reached the spool moves back against the spring closing the line between inlet and outlet.

When the pilot pressure falls the valve will return to its normal position.

Features

Cartridge design enabling speedy servicing when mounted in a body or in a composite manifold.

Sectional view

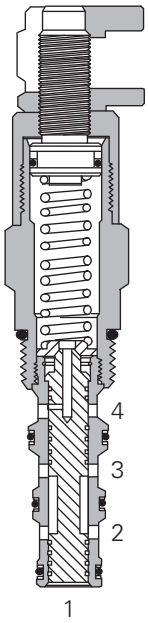

Performance data

Ratings and specifications

Performance data is typical with fluid at 21,8 cSt (105 SUS) and 49° C (120° F)	
Typical application pressure (all ports)	210 bar (3000 psi)
Cartridge fatigue pressure (infinite life)	210 bar (3000 psi)
Maximum sequence pressure	165 bar (2400 psi)
Rated flow	23 L/min (6 USgpm)
Cavity	C-10–4
Standard housing materials	Aluminum
Temperature range	-40° to 120°C (-40° to 248°F)
Fluids	All general purpose hydraulic fluids such as: MIL–H–5606, SAE 10, SAE 20, etc.
Filtration	Cleanliness Code 18/**16**/**13**
Weight cartridge only	0,27 kg (0.60 lbs)
Seal kits	889625 Buna–N 566080 Viton®

Viton is a registered trademark of E.I. DuPont

⚠ Caution

When sudden pressure or velocity is applied at port 1, an orifice disc may be required.

Description

This valve provides a means of interrupting a pressure line when a predetermined pilot pressure is reached in a normally open form.

The valve can be used in any pilot or small flow system as a remotely operated sequence valve.

Pressure drop curve

Port 3 to 2,
valve fully open

Cartridge only

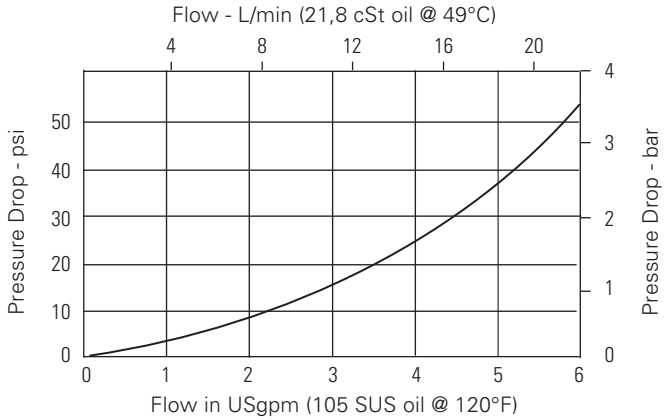

Where measurements are critical request certified drawings. We reserve the right to change specifications without notice.

PSV8-10 Pressure sequence valve

Spool direct acting, normally open, external drain
23 L/min (6 USgpm) • 210 bar (3000 psi)

Model code

PSV8 – 10 (V) – * – ** – **/ ** – 00

1 2 3 4 5 6 7 8

1 Function

PSV8 - Pressure sequence valve

2 Size

10 - 10 size

3 Seal material

Blank - Buna-N
V - Viton®

4 Adjustment

C - Cap
F - Factory set
I - Internal
K - Knob
S - Screw

5 Port size

0 - Cartridge only

Code	Port size	Housing number	
		Aluminum Light duty	Aluminum Fatigue rated
3B	3/8" BSPP	02–179705	–
6T	SAE 6	566161	–
2G	1/4" BSPP	–	876709
3G	3/8" BSPP	–	876715
6H	SAE 6	–	876708
8H	SAE 8	–	876713

See section J for housing.

6 Sequence pressure range

Note: Code based on pressure in psi.

2 - 3,5-14 bar (50-200 psi)
4 - 5-28 bar (75-400 psi)
6 - 7-40 bar (100-600 psi)
12 - 14-80 bar (200-1200 psi)
24 - 28-165 bar (400-2400 psi)

7 Setting pressure

Within ranges in 6

Blank - Normal factory setting at approximate mid-range. User requested settings in 3,45 bar (50 psi) steps, Coded as in the following examples:

10 - 70 bar (1000 psi)
10.5 - 72,4 bar (1050 psi)

8 Special features

00 - None
(Only required if valve has special features, omitted if "00.")

E

Dimensions

mm (inch)

Cartridge only

Torque cartridge in housing
47-54 Nm (35-40 ft. lbs)

Installation drawing

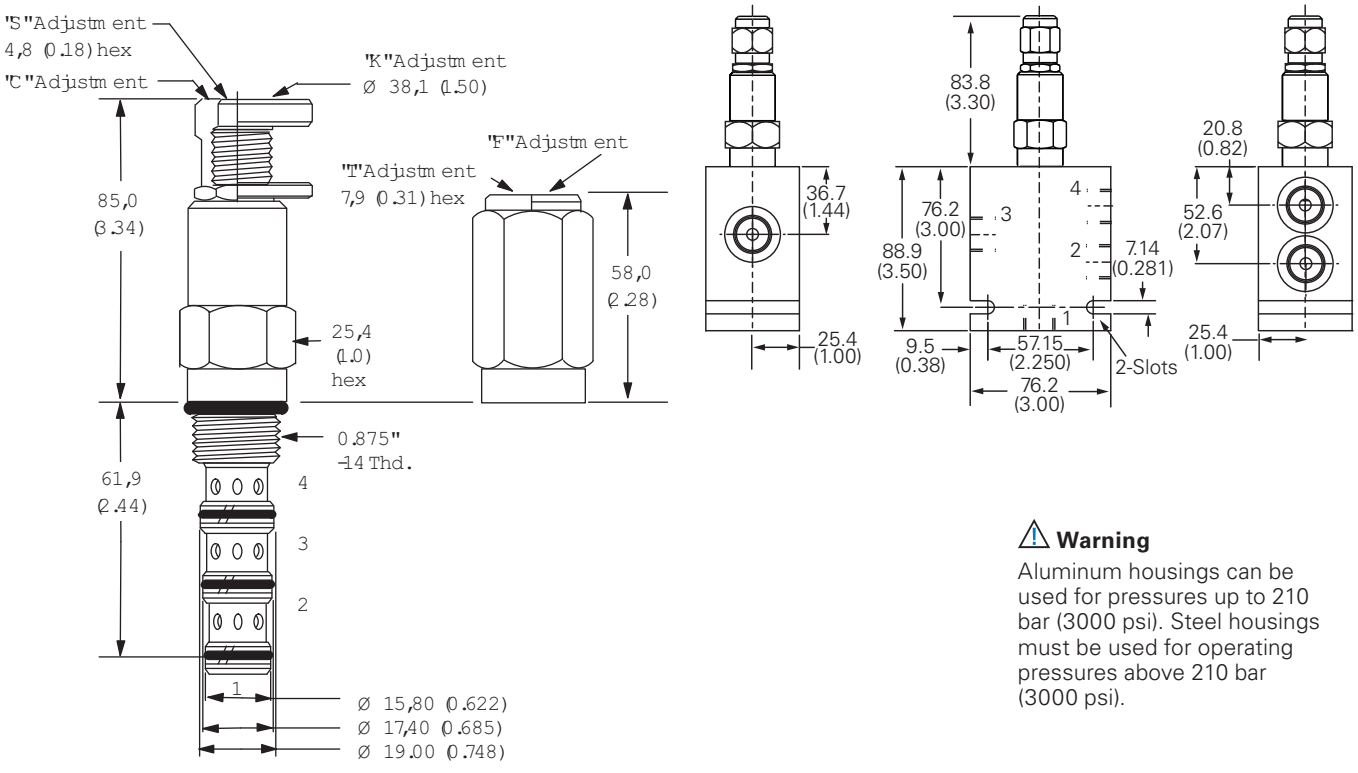

⚠ Warning

Aluminum housings can be used for pressures up to 210 bar (3000 psi). Steel housings must be used for operating pressures above 210 bar (3000 psi).

Where measurements are critical request certified drawings. We reserve the right to change specifications without notice.

PSV10-10 - Pressure sequence valve

Spool direct acting, normally open, external drain
23 L/min (6 USgpm) • 210 bar (3000 psi)

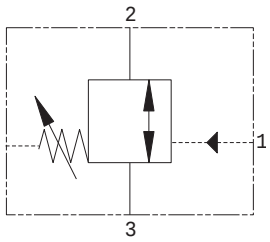

Operation

When a pre-set pilot pressure is reached the spool moves back against the spring opening the line between inlet and outlet.

When the pilot pressure falls the valve will return to its normal position.

Features

Cartridge design enabling speedy servicing when mounted in a body or in a composite manifold.

Sectional view

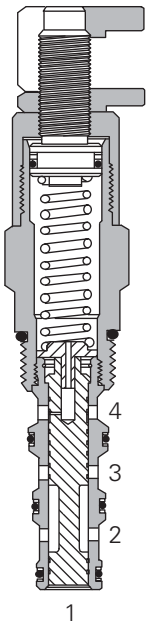

Performance data

Ratings and specifications

Performance data is typical with fluid at 21,8 cSt (105 SUS) and 49° C (120° F)	
Typical application pressure (all ports)	210 bar (3000 psi)
Cartridge fatigue pressure (infinite life)	210 bar (3000 psi)
Maximum sequence pressure	165 bar (2400 psi)
Rated flow	23 L/min (6 USgpm)
Cavity	C-10–4
Standard housing materials	Aluminum
Temperature range	-40° to 120°C (-40° to 248°F)
Fluids	All general purpose hydraulic fluids such as: MIL–H–5606, SAE 10, SAE 20, etc.
Filtration	Cleanliness Code 18/**16**/**13**
Weight cartridge only	0,27 kg (0.60 lbs)
Seal kits	889625 Buna–N 566080 Viton®

Viton is a registered trademark of E.I. DuPont

⚠ Caution

When sudden pressure or velocity is applied at port 1, an orifice disc may be required.

Description

This valve provides a means of opening a pressure line when a predetermined pilot pressure is reached in a normally closed form.

The valve can be used in any pilot or small flow system as a remotely operated sequence valve.

Pressure drop curve

Port 3 to 2,
valve fully open,
spring omitted

Cartridge only

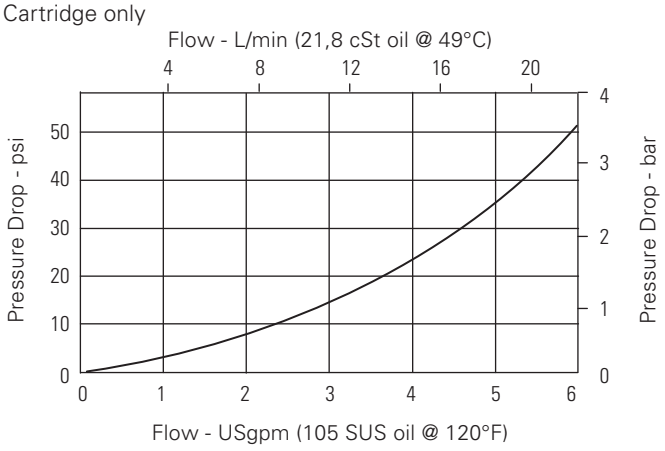

Where measurements are critical request certified drawings. We reserve the right to change specifications without notice.

PSV10-10 - Pressure sequence valve

Spool direct acting, normally closed, external drain
23 L/min (6 USgpm) • 210 bar (3000 psi)

Model code

PSV10 – 10 (V) – * – ** – **/ ** – 00

1 2 3 4 5 6 7 8

1 Function

PSV10 - Pressure sequence valve

2 Size

10 - 10 size

3 Seal material

Blank - Buna-N
V - Viton®

4 Adjustment

C - Cap
F - Factory set
I - Internal
K - Knob
S - Screw

5 Port size

0 - Cartridge only

Code	Port size	Housing number	
		Aluminum light duty	Aluminum fatigue rated
3B	3/8" BSPP	02–179705	–
6T	SAE 6	566161	–
2G	1/4" BSPP	–	876709
3G	3/8" BSPP	–	876715
6H	SAE 6	–	876708
8H	SAE 8	–	876713

See section J for housing.

6 Sequence pressure range

Note: Code based on pressure in psi.

2 - 3,5-14 bar (50-200 psi)
4 - 5-28 bar (75-400 psi)
6 - 7-40 bar (100-600 psi)
12 - 14-80 bar (200-1200 psi)
24 - 28-165 bar (400-2400 psi)

7 Setting pressure

Within ranges in 6

Blank - Normal factory setting at approximate mid-range. User requested settings in 3,45 bar (50 psi) steps, Coded as in the following examples:

10 - 70 bar (1000 psi)
10.5 - 72,4 bar (1050 psi)

8 Special features

00 - None
(Only required if valve has special features, omitted if "00.")

Dimensions

mm (inch)

Torque cartridge in housing
47-54 Nm (35-40 ft. lbs)

Cartridge only

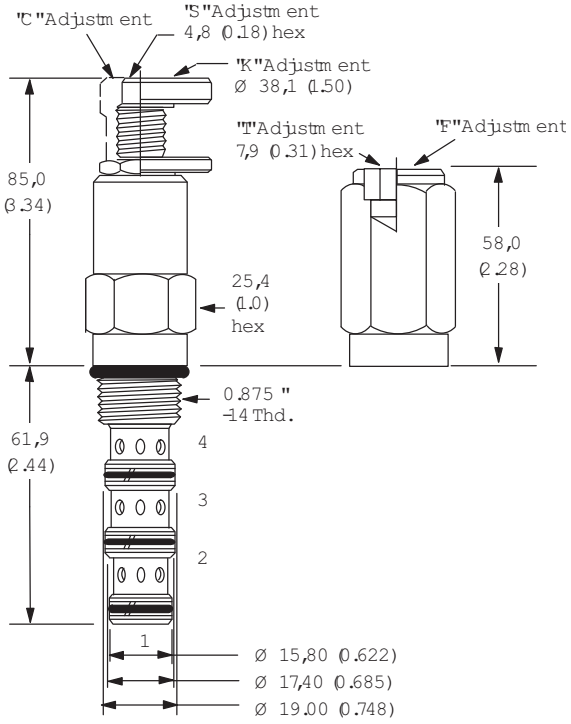

Installation drawing

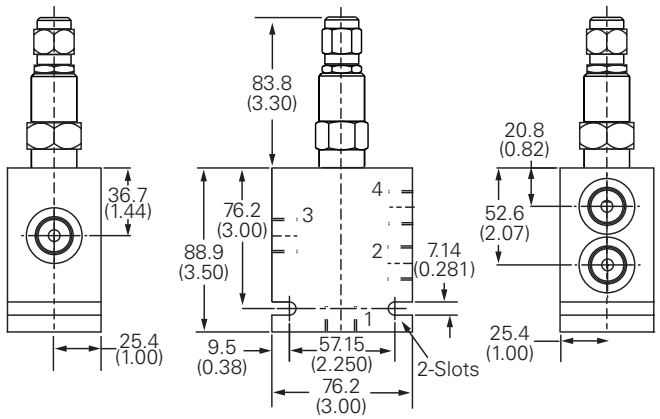

Where measurements are critical request certified drawings. We reserve the right to change specifications without notice.

E

PSV2-10 - Pressure sequence valve

Spool, direct acting, normally closed, internal drain
23 L/min (6 USgpm) • 210 bar (3000 psi)

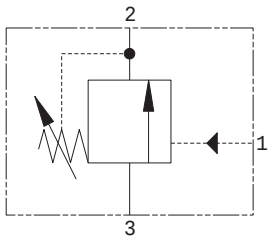

Operation

When a pre-set pilot pressure is reached the spool moves back against the spring opening the line between inlet and outlet.

When the pilot pressure falls the valve will return to its normal position.

Features

Cartridge design enabling speedy servicing when mounted in a body or in a composite manifold.

Sectional view

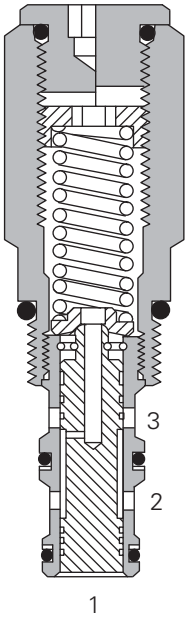

Performance data

Ratings and specifications

Performance data is typical with fluid at 21,8 cSt (105 SUS) and 49° C (120° F)	
Typical application pressure (all ports)	210 bar (3000 psi)
Cartridge fatigue pressure (infinite life)	210 bar (3000 psi)
Maximum sequence pressure	165 bar (2400 psi)
Rated flow	23 L/min (6 USgpm)
Cavity	C-10–3
Standard housing materials	Aluminum
Temperature range	-40° to 120°C (-40° to 248°F)
Fluids	All general purpose hydraulic fluids such as: MIL–H–5606, SAE 10, SAE 20, etc.
Filtration	Cleanliness Code 18/**16**/**13**
Weight cartridge only	0,24 kg (0.53 lbs)
Seal kits	565804 Buna–N 889599 Viton®

Viton is a registered trademark of E.I. DuPont

Description

This valve provides a means of opening a pressure line when a predetermined pilot pressure is reached in a normally closed form.

The valve can be used in any pilot or small flow system as a remotely operated sequence valve.

Pressure drop curve

Cartridge only

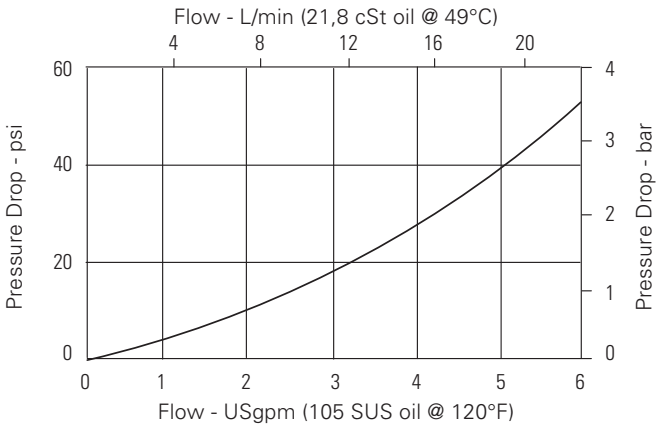

Where measurements are critical request certified drawings. We reserve the right to change specifications without notice.

PSV2-10 - Pressure sequence valve

Spool, direct acting, normally closed, internal drain
23 L/min (6 USgpm) • 210 bar (3000 psi)

Model code

PSV2 – 10 (V) – * – ** – **/ ** – 00

1 2 3 4 5 6 7 8

1 Function

PSV2 - Pressure sequence valve

2 Size

10 - 10 size

3 Seal material

Blank - Buna-N
V - Viton®

4 Adjustment

C - Cap
F - Factory set
I - Internal
K - Knob
S - Screw

5 Port size

0 - Cartridge only

Code	Port size	Housing number	
		Aluminum light duty	Aluminum fatigue rated
3B	3/8" BSPP	02–173358	–
6T	SAE 6	566162	–
2G	3/4" BSPP	–	876705
3G	3/8" BSPP	–	876714
6H	SAE 6	–	876704
8H	SAE 8	–	876711

See section J for housing.

6 Sequence pressure range

Note: Code based on pressure in psi.

2 - 3,5-14 bar (50-200 psi)
6 - 7-40 bar (100-600 psi)
12 - 14-80 bar (200-1200 psi)
24 - 25-165 bar (400-2400 psi)

7 Setting pressure

Within ranges in 6

Blank - Normal factory setting at approximate mid-range. User requested settings in 3,45 bar (50 psi) steps, Coded as in the following examples:
10 - 70 bar (1000 psi)
10.5 - 72,4 bar (1050 psi)

8 Special features

00 - None
(Only required if valve has special features, omitted if "00.")

Dimensions

mm (inch)

Torque cartridge in housing
47-54 Nm (35-40 ft. lbs)

Cartridge only

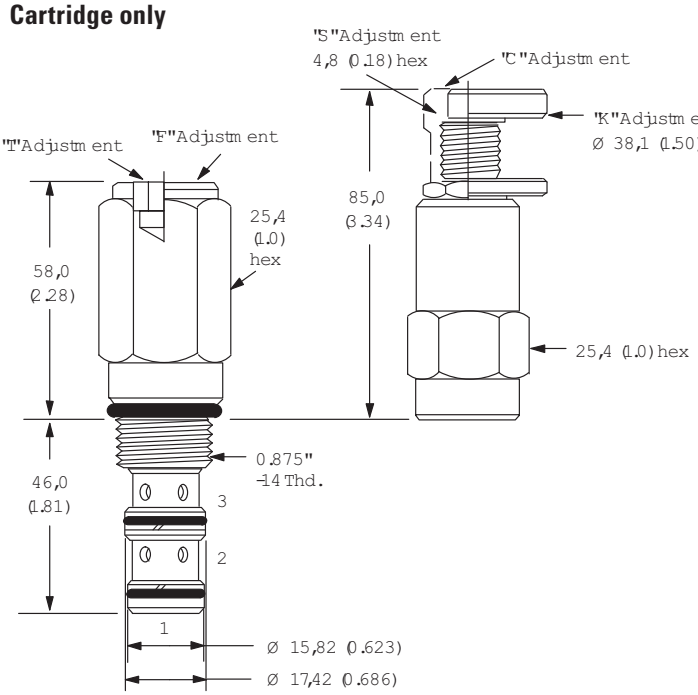

Installation drawing

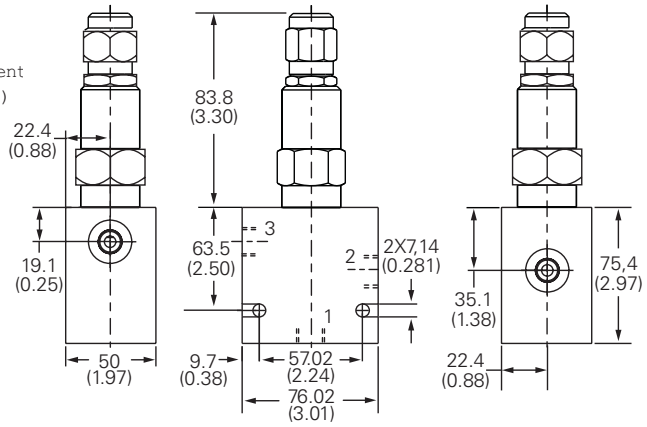

⚠ Warning

Aluminum housings can be used for pressures up to 210 bar (3000 psi). Steel housings must be used for operating pressures above 210 bar (3000 psi).

Where measurements are critical request certified drawings. We reserve the right to change specifications without notice.

E

PSV4-10 - Pressure sequence valve

Spool, direct acting, normally closed, internal drain
15 L/min (4 USgpm) • 210 bar (3000 psi)

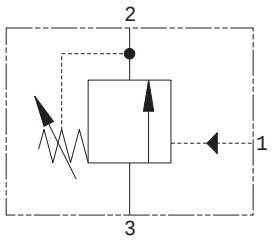

Operation

When a pre-set pilot pressure is reached the spool moves back against the spring opening the line between inlet and outlet.

When the pilot pressure falls the valve will return to its normal position.

Features

Cartridge design enabling speedy servicing when mounted in a body or in a composite manifold.

Sectional view

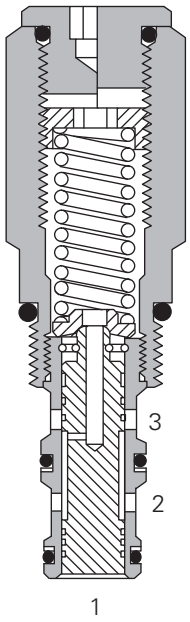

Description

This valve provides a means of opening a pressure line when a predetermined pilot pressure is reached in a normally closed form.

The valve can be used in any pilot or small flow system as a remotely operated sequence valve.

Performance data

Ratings and specifications

Performance data is typical with fluid at 21,8 cSt (105 SUS) and 49° C (120° F)	
Typical application pressure, port 2 and 3	210 bar (3000 psi)
Maximum sequence pressure, port 1	380 bar (5600 psi)
Cartridge fatigue pressure (infinite life)	165 bar (2400 psi)
Rated flow	15 L/min (4 USgpm)
Cavity	C-10–3
Standard housing materials	Aluminum or steel
Temperature range	-40° to 120°C (-40° to 248°F)
Fluids	All general purpose hydraulic fluids such as: MIL–H–5606, SAE 10, SAE 20, etc.
Filtration	Cleanliness Code 18/**16**/**13**
Weight cartridge only	0,24 kg (0.53 lbs)
Seal kits	565804 Buna–N 889599 Viton®

Viton is a registered trademark of E.I. DuPont

Pressure drop curve

Cartridge only

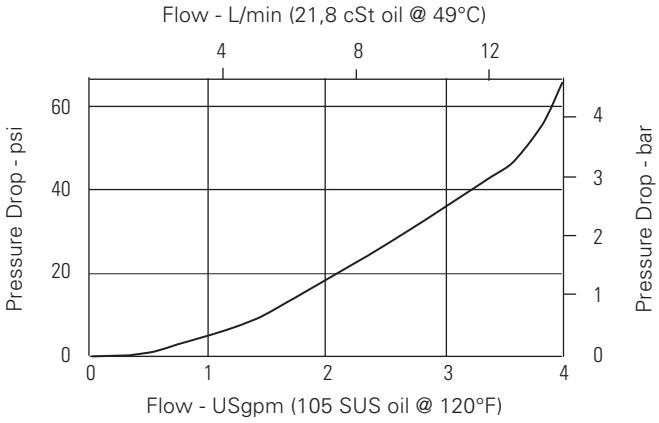

Where measurements are critical request certified drawings. We reserve the right to change specifications without notice.

PSV4-10 - Pressure sequence valve

Spool, direct acting, normally closed, internal drain
15 L/min (4 USgpm) • 210 bar (3000 psi)

Model code

PSV4 – 10 (V) – * – (S) – ** – **/ ** – 00

1 2 3 4 5 6 7 8 9

1 Function

PSV4 - Pressure sequence valve

2 Size

10 - 10 size

3 Seal material

Blank - Buna-N
V - Viton®

4 Adjustment

C - Cap
F - Factory set
I - Internal
K - Knob
S - Screw

5 Valve housing material

Blank - Aluminum
S - Steel

6 Port size

0 - Cartridge only

Code	Port size	Housing number		
		Aluminum light duty	Aluminum fatigue rated	Steel fatigue rated
3B	3/8" BSPP	02–173358	–	–
2G	1/4" BSPP	–	876705	02–175127
3G	3/8" BSPP	–	876714	02–175128
6H	SAE 6	–	876704	–
8H	SAE 8	–	876711	–
6T	SAE 6	566162	–	02–175124
8T	SAE 8	–	–	02–175125

See section J for housing.

7 Sequence pressure range

Note: Code based on pressure in psi.

5 - 3,5-30 bar (50-450 psi)
9 - 7-62 bar (100-900 psi)
14 - 14-95 bar (200-1400 psi)
28 - 20-190 bar (300-2800 psi)
56 - 35-380 bar (500-5600 psi)

8 Setting pressure

Within ranges in **7**

Blank - Normal factory setting at approximate mid-range. User requested settings in 3,45 bar (50 psi) steps, Coded as in the following examples:
10 - 70 bar (1000 psi)
10.5 - 72,4 bar (1050 psi)

9 Special features

00 - None
(Only required if valve has special features, omitted if "00.")

Dimensions

mm (inch)

Cartridge only

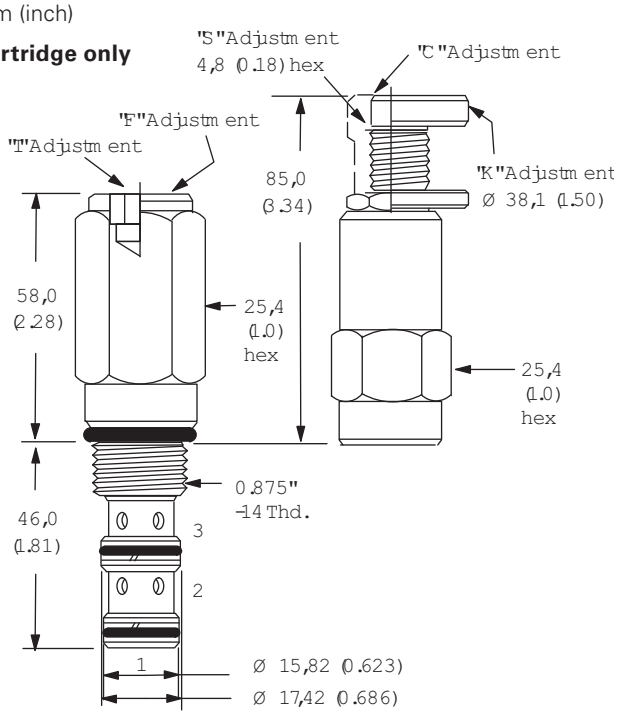

Installation drawing (aluminum)

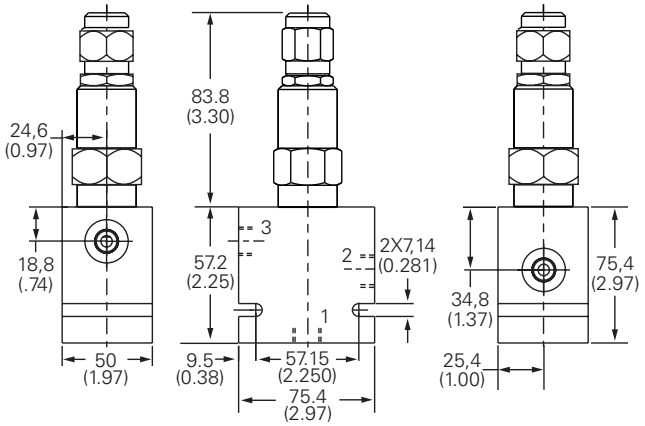

Torque cartridge in housing
A - 47-54 Nm (35-40 ft. lbs)
S - 68-75 Nm (50-55 ft. lbs)

⚠ Warning

Aluminum housings can be used for pressures up to 210 bar (3000 psi). Steel housings must be used for operating pressures above 210 bar (3000 psi).

Where measurements are critical request certified drawings. We reserve the right to change specifications without notice.

E

PSV1-10 - Pressure sequence valve

Spool, direct acting, normally closed, internal pilot, external drain
23 L/min (6 USgpm) • 210 bar (3000 psi)

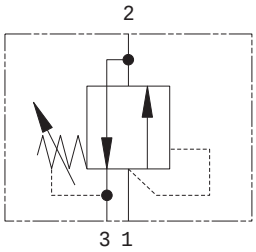

Operation

In the normal condition port 2 is open to the tank port 3 and port 1 is blocked.

When the pressure on port 1 exceeds the setting of the valve port 1 opens to port 2 and port 3 is blocked but must always be referenced to tank.

Features

Cartridge design enabling speedy servicing when mounted in a body or in a composite manifold.

Sectional view

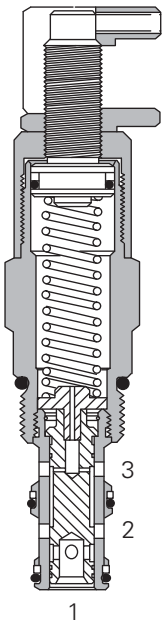

Performance data

Ratings and specifications

Performance data is typical with fluid at 21,8 cSt (105 SUS) and 49° C (120° F)	
Typical application pressure (all ports)	210 bar (3000 psi)
Cartridge fatigue pressure (infinite life)	210 bar (3000 psi)
Maximum sequence pressure	165 bar (2400 psi)
Rated flow	23 L/min (6 USgpm)
Cavity	C-10–3
Standard housing materials	Aluminum
Temperature range	-40° to 120°C (-40° to 248°F)
Fluids	All general purpose hydraulic fluids such as: MIL–H–5606, SAE 10, SAE 20, etc.
Filtration	Cleanliness Code 18/**16**/**13**
Weight cartridge only	0,24 kg (0.53 lbs)
Seal kits	565804 Buna–N 889599 Viton®

Viton is a registered trademark of E.I. DuPont

Description

Direct acting sequence valves are ideal for diverting oil to a second circuit at a predetermined pressure as in clamp and drill circuits, or as a relief where the back pressure varies. By taking the drain line directly to tank, back pressure effects are negated. In the valves normal position the outlet is drained to tank.

Pressure drop curve

Cartridge only

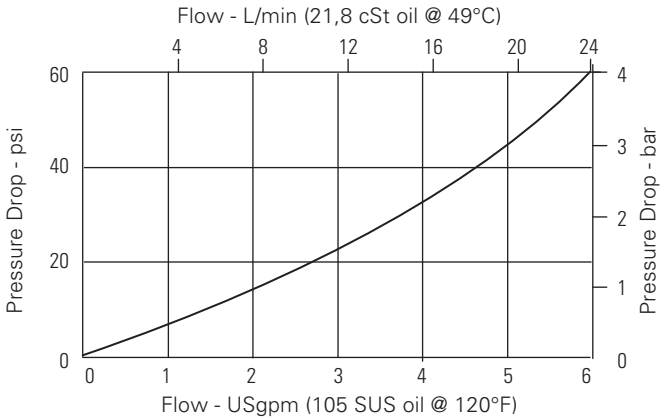

Where measurements are critical request certified drawings. We reserve the right to change specifications without notice.

PSV1-10 - Pressure sequence valve

Spool, direct acting, normally closed, internal pilot, external drain
23 L/min (6 USgpm) • 210 bar (3000 psi)

Model code

PSV1 – 10 (V) – * – ** – **/ ** – 00

1 2 3 4 5 6 7 8

1 Function

PSV1 - Pressure sequence valve

2 Size

10 - 10 size

3 Seal material

Blank - Buna-N
V - Viton®

4 Adjustment

C - Cap
F - Factory set
I - Internal
K - Knob
S - Screw

5 Port size

0 - Cartridge only

Code	Port size	Housing number	
		Aluminum fatigue rated	Steel fatigue rated
3B	3/8" BSPP	02–173358	–
6T	SAE 6	566162	–
2G	1/4" BSPP	–	876705
3G	3/8" BSPP	–	876714
6H	SAE 6	–	876704
8H	SAE 8	–	876711

See section J for housing details.

6 Sequence pressure range

Note: Code based on pressure in psi.

2 - 3,5-14 bar (50-200 psi)
6 - 7-40 bar (100-600 psi)
12 - 14-80 bar (200-1200 psi)
24 - 25-165 bar (400-2400 psi)

7 Setting pressure

Within ranges in 6

Blank - Normal factory setting at approximate mid-range. User requested settings in 3,45 bar (50 psi) steps, Coded as in the following examples:

10 - 70 bar (1000 psi)
10.5 - 72,4 bar (1050 psi)

8 Special features

00 - None
(Only required if valve has special features, omitted if "00.")

E

Dimensions

mm (inch)

Torque cartridge in aluminum housing to 47-54 Nm (35-40 ft. lbs)

Cartridge only

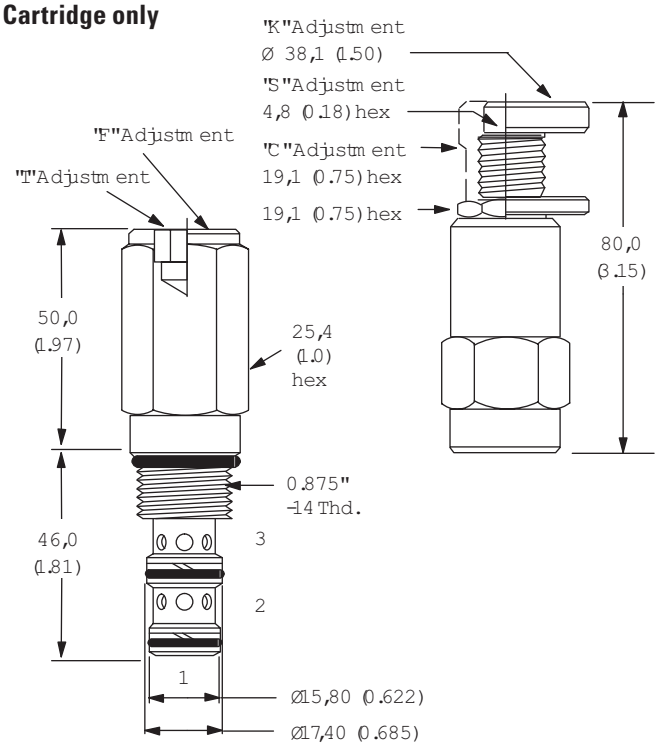

Installation drawing (Aluminum)

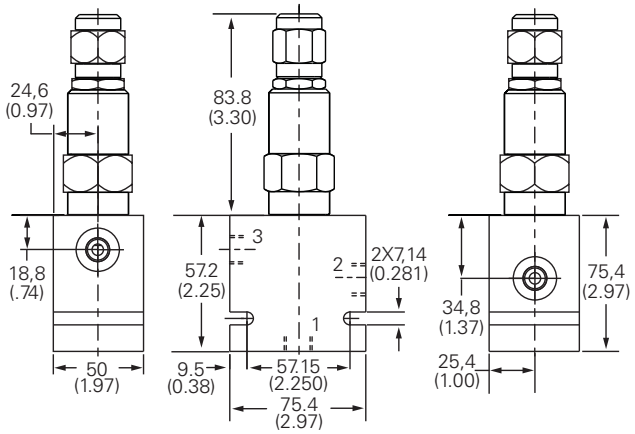

Where measurements are critical request certified drawings. We reserve the right to change specifications without notice.

PSV5-10 - Pressure sequence valve

Spool, direct acting, normally closed, internal pilot, external drain
8 L/min (2 USgpm) • 210 bar (3000 psi)

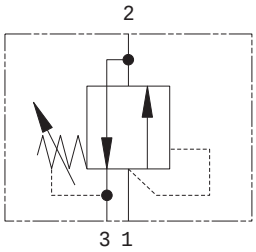

Operation

In the normal condition port 2 is open to the tank port 3 and port 1 is blocked.

When the pressure on port 1 exceeds the setting of the valve port 1 opens to port 2 and port 3 is blocked but must always be referenced to tank.

Features

Cartridge design enabling speedy servicing when mounted in a body or in a composite manifold.

Sectional view

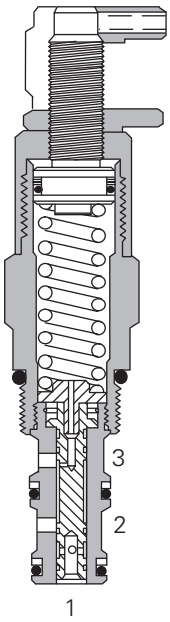

Description

Direct acting sequence valves are ideal for diverting oil to a second circuit at a predetermined pressure as in clamp and drill circuits, or as a relief where the back pressure varies. By taking the drain line directly to tank, back pressure effects are negated. In the valves normal position the outlet is drained to tank.

Performance data

Ratings and specifications

Performance data is typical with fluid at 21,8 cSt (105 SUS) and 49° C (120° F)	
Typical application pressure (all ports)	210 bar (3000 psi)
Cartridge fatigue pressure (infinite life)	190 bar (2800 psi)
Maximum sequence pressure	380 bar (5600 psi)
Rated flow	8 L/min (2 USgpm)
Cavity	C-10–3
Standard housing materials	Aluminum or steel
Temperature range	-40° to 120°C (-40° to 248°F)
Fluids	All general purpose hydraulic fluids such as: MIL–H–5606, SAE 10, SAE 20, etc.
Filtration	Cleanliness Code 18/**16/13**
Weight cartridge only	0,24 kg (0.53 lbs)
Seal kits	565804 Buna–N 889599 Viton®

Viton is a registered trademark of E.I. DuPont

Pressure drop curve

Cartridge only

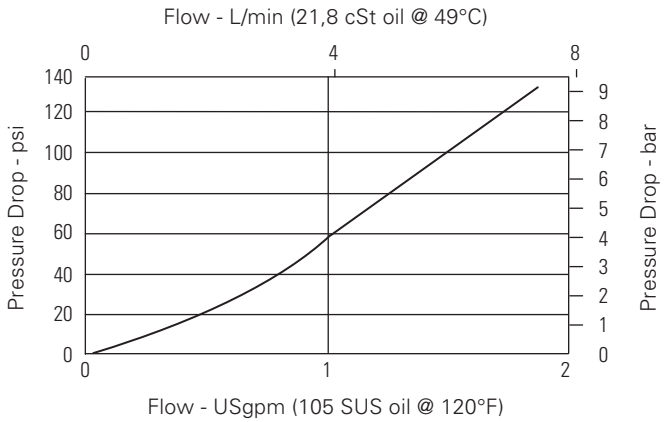

Where measurements are critical request certified drawings. We reserve the right to change specifications without notice.

PSV5-10 - Pressure sequence valve

Spool, direct acting, normally closed, internal pilot, external drain
8 L/min (2 USgpm) • 210 bar (3000 psi)

Model code

PSV5 – 10 (V) – * – (*) – ** – **/ ** – 00

1 2 3 4 5 6 7 8 9

1 Function

PSV5 - Pressure sequence valve

2 Size

10 - 10 size

3 Seal material

Blank - Buna-N
V - Viton®

4 Adjustment

C - Cap
K - Knob
I - Internal
F - Factory set
S - Screw

5 Valve housing material

Blank - Aluminum
S - Steel

6 Port size

0 - Cartridge only

Code	Port size	Housing number		
		Aluminum light duty	Aluminum fatigue rated	Steel fatigue rated
3B	3/8" BSPP	02–173358	–	–
2G	1/4" BSPP	–	876705	02–175127
3G	3/8" BSPP	–	876714	02–175128
6H	SAE 6	–	876704	–
8H	SAE 8	–	876711	–
6T	SAE 6	566162	–	02–175124
8T	SAE 8	–	–	02–175125

See section J for housing.

7 Sequence pressure range

Note: Code based on pressure in psi.

5 - 3,5-30 bar (50-450 psi)
9 - 7-62 bar (100-900 psi)
14 - 14-95 bar (200-1400 psi)
28 - 20-190 bar (300-2800 psi)
56 - 35-380 bar (500-5600 psi)

8 Setting pressure

Within ranges in **7**

Blank - Normal factory setting at approximate mid-range. User requested settings in 3,45 bar (50 psi)steps, Coded as in the following examples:

10 - 70 bar (1000 psi)
10.5 - 72,4 bar (1050 psi)

9 Special features

00 - None
(Only required if valve has special features, omitted if "00.")

Dimensions

mm (inch)

Cartridge only

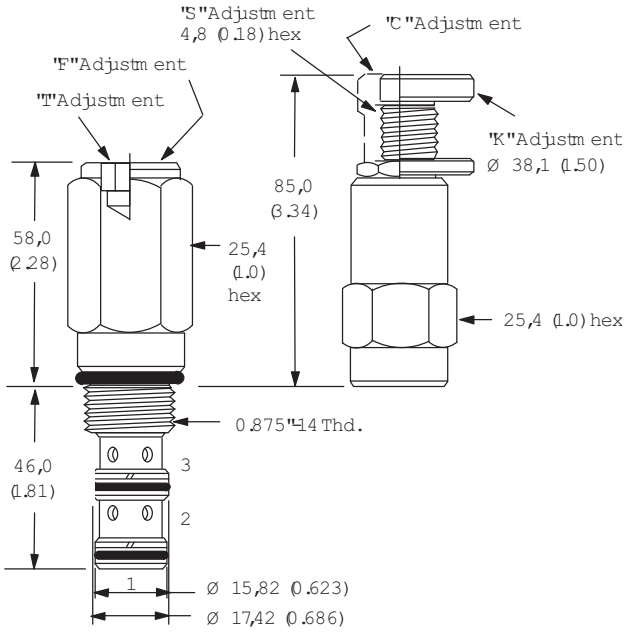

Installation drawing (Aluminum)

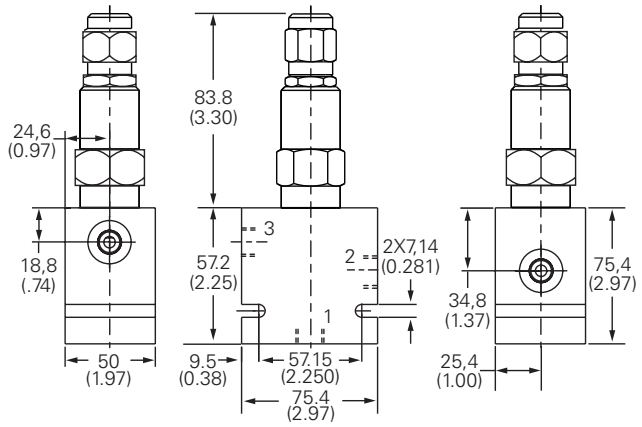

Torque cartridge in housing
A - 47-54 Nm (35-40 ft. lbs)
S - 68-75 Nm (50-55 ft. lbs)

⚠ Warning

Aluminum housings can be used for pressures up to 210 bar (3000 psi). Steel housings must be used for operating pressures above 210 bar (3000 psi).

Where measurements are critical request certified drawings. We reserve the right to change specifications without notice.

E

PSV3-10 - Pressure sequence valve

Spool, direct acting, normally closed, internal or external pilot/drain
23 L/min (6 USgpm) • 210 bar (3000 psi)

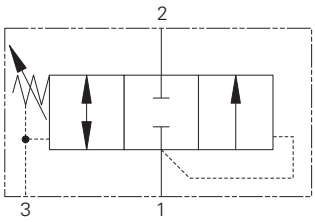

Operation

The valve is normally closed until a pre-determined pressure is applied to port 1. The spool then shifts and allows flow from port 1 to port 2.

When port 3 is pressurized the spool shifts to allow flow from port 2 to port 1.

Features

Stable, quiet operation. Cartridge construction gives maximum flexibility in mounting. Offering good repeatability and reseat.

Sectional view

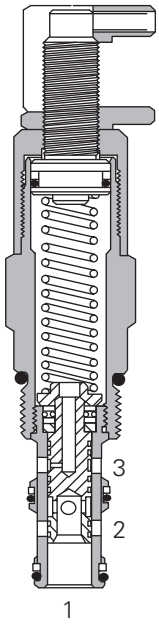

Performance data

Ratings and specifications

Performance data is typical with fluid at 23,3 cSt (111 SUS) and 49° C (120° F)	
Typical application pressure (all ports)	210 bar (3000 psi)
Cartridge fatigue pressure (infinite life)	210 bar (3000 psi)
Maximum sequence pressure	165 bar (2400 psi)
Rated flow	23 L/min (6 USgpm)
Cavity	C-10–3
Standard housing materials	Aluminum
Temperature range	-40° to 120°C (-40° to 248°F)
Fluids	All general purpose hydraulic fluids such as: MIL–H–5606, SAE 10, SAE 20, etc.
Filtration	Cleanliness Code 18/**16**/**13**
Weight cartridge only	0,24 kg (0.53 lbs)
Seal kits	565804 Buna–N 889599 Viton®

Viton is a registered trademark of E.I. DuPont

Description

Direct acting sequence valves are ideal for diverting oil to a second circuit at a predetermined pressure as in clamp and drill circuits, or as a relief where the back pressure varies. By taking the drain line directly to tank, back pressure effects are negated. Pressurizing port 3 will allow free flow from port 2 to port 1.

Pressure drop curve

Cartridge only

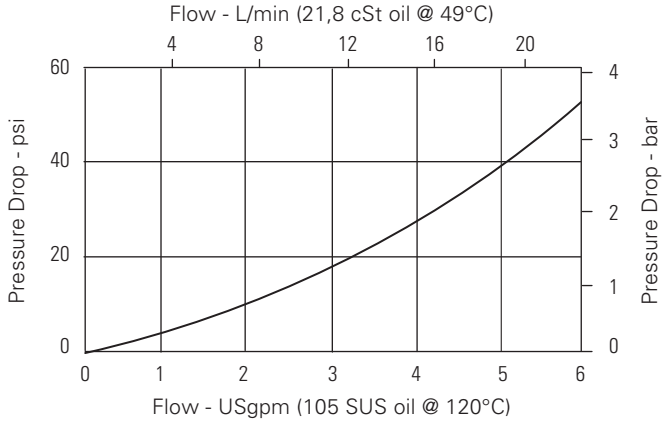

Where measurements are critical request certified drawings. We reserve the right to change specifications without notice.

PSV3-10 - Pressure sequence valve

Spool, direct acting, normally closed, internal or external pilot/drain
23 L/min (6 USgpm) • 210 bar (3000 psi)

Model code

PSV3 – 10 (V) – * – ** – **/ ** – 00

1 2 3 4 5 6 7 8

1 Function
PSV3 - Pressure sequence valve

2 Size
10 - 10 size

3 Seal material
Blank - Buna-N
V - Viton®

4 Adjustment
C - Cap
F - Factory set
I - Internal
K - Knob
S - Screw

5 Port size
0 - Cartridge only

Code	Port size	Housing number	
		Aluminum light duty	Aluminum fatigue rated
3B	3/8" BSPP	02–173358	–
6T	SAE 6	566162	–
2G	1/4" BSPP	–	876705
3G	3/8" BSPP	–	876714
6H	SAE 6	–	876704
8H	SAE 8	–	876711

See section J for housing.

6 Sequence pressure range
Note: Code based on pressure in psi.

2 - 3,5-14 bar (50-200 psi)
4 - 5-28 bar (75-400 psi)
6 - 7-40 bar (100-600 psi)
12 - 14-80 bar (200-1200 psi)
24 - 25-165 bar (400-2400 psi)

7 Setting pressure
Within ranges in 6

Blank - Normal factory setting at approximate mid-range. User requested settings in 3,45 bar (50 psi) steps, Coded as in the following examples:

10 - 70 bar (1000 psi)
10.5 - 72,4 bar (1050 psi)

8 Special features
00 - None
(Only required if valve has special features, omitted if "00.")

Dimensions
mm (inch)

Torque cartridge in aluminum housing to 47-54 Nm (35-40 ft. lbs)

Cartridge only

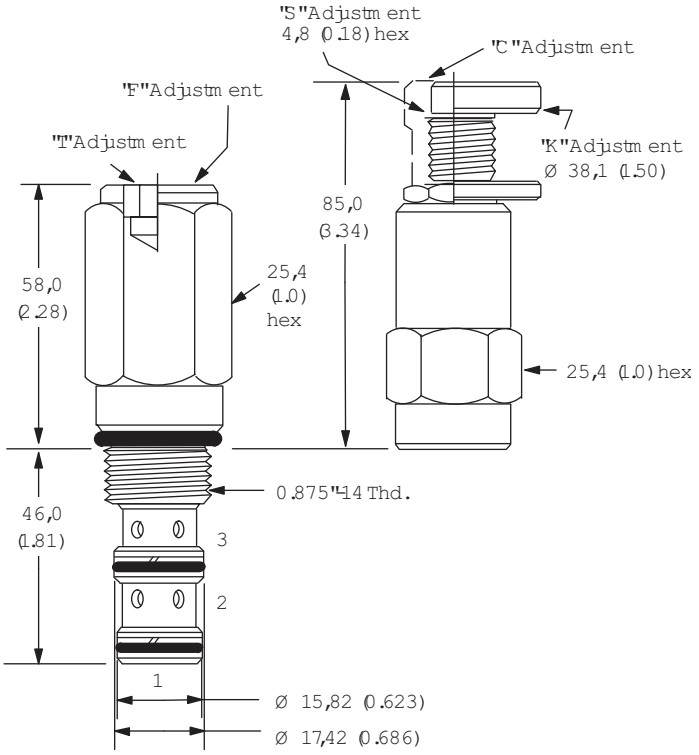

Installation drawing

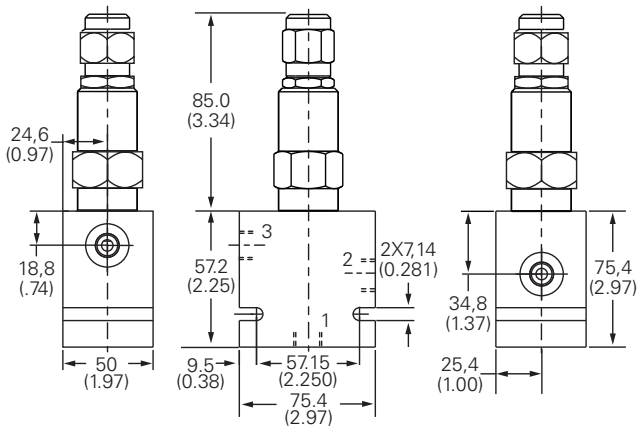

Where measurements are critical request certified drawings. We reserve the right to change specifications without notice.

E

PSV7-10 - Pressure sequence valve

Spool, direct acting, normally closed, internal pilot, external drain
23 L/min (6 USgpm) • 210 bar (3000 psi)

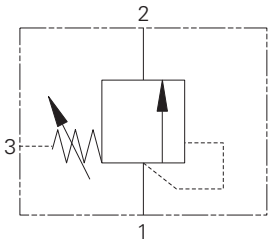

Operation

As with the direct acting relief valves, when the pressure exceeds the spring force, the spool moves back, opening the inlet to outlet.

Features

Stable, quiet operation. Cartridge construction gives maximum flexibility in mounting. Offering good repeatability and reseat.

Sectional view

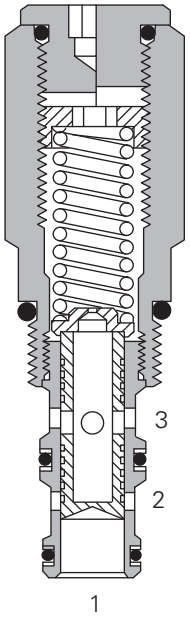

Performance data

Ratings and specifications

Performance data is typical with fluid at 21,8 cSt (105 SUS) and 49° C (120° F)	
Typical application pressure	210 bar (3000 psi)
Cartridge fatigue pressure (infinite life)	210 bar (3000 psi)
Maximum sequence pressure	125 bar (1800 psi)
Rated flow	23 L/min (6 USgpm)
Cavity	C-10–3
Standard housing materials	Aluminum
Temperature range	-40° to 120°C (-40° to 248°F)
Fluids	All general purpose hydraulic fluids such as: MIL–H–5606, SAE 10, SAE 20, etc.
Filtration	Cleanliness Code 18/**16**/**13**
Weight cartridge only	0,24 kg (0.53 lbs)
Seal kits	565804 Buna–N 889599 Viton®

Viton is a registered trademark of E.I. DuPont

Description

Direct acting sequence valves are ideal for diverting oil to a second circuit at a predetermined pressure as in clamp and drill circuits, or as a relief where the back pressure varies. By taking the drain line directly to tank, back pressure effects are negated.

Pressure drop curve

Cartridge only

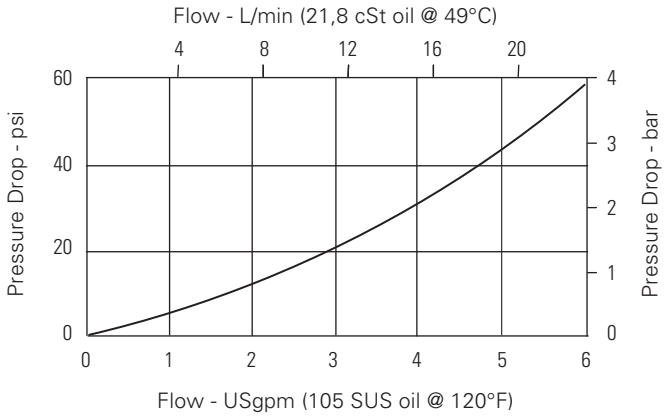

Where measurements are critical request certified drawings. We reserve the right to change specifications without notice.

PSV7-10 - Pressure sequence valve

Spool, direct acting, normally closed, internal pilot, external drain
23 L/min (6 USgpm) • 210 bar (3000 psi)

Model code

PSV7 – 10 (V) – * – ** – **/ ** – 00

1 2 3 4 5 6 7 8

1 Function

PSV7 - Pressure sequence valve

2 Size

10 - 10 size

3 Seal material

Blank - Buna-N
V - Viton®

4 Adjustment

C - Cap
F - Factory set
I - Internal
K - Knob
S - Screw

5 Port size

0 - Cartridge only

Code	Port size	Housing number	
		Aluminum light duty	Aluminum fatigue rated
3B	3/8" BSPP	02–173358	–
6T	SAE 6	566162	–
2G	3/4" BSPP	–	876705
3G	3/8" BSPP	–	876714
6H	SAE 6	–	876704
8H	SAE 8	–	876711

See section J for housing.

6 Sequence pressure range

Note: Code based on pressure in psi.
2 - 3,5-10 bar (50-150 psi)
3 - 5-20 bar (75-300 psi)
5 - 7-30 bar (100-450 psi)
10 - 14-65 bar (200-950 psi)
18 - 20-125 bar (300-1800 psi)

7 Setting pressure

Within ranges in 6
Blank - Normal factory setting at approximate mid-range. User requested settings in 3,45 bar (50 psi) steps, Coded as in the following examples:
10 - 70 bar (1000 psi)
10.5 - 72,4 bar (1050 psi)

8 Special features

00 - None
(Only required if valve has special features, omitted if "00.")
SS - 316 Stainless Steel external components

Dimensions

mm (inch)

Torque cartridge in aluminum housing to 47-54 Nm (35-40 ft. lbs)

Cartridge only

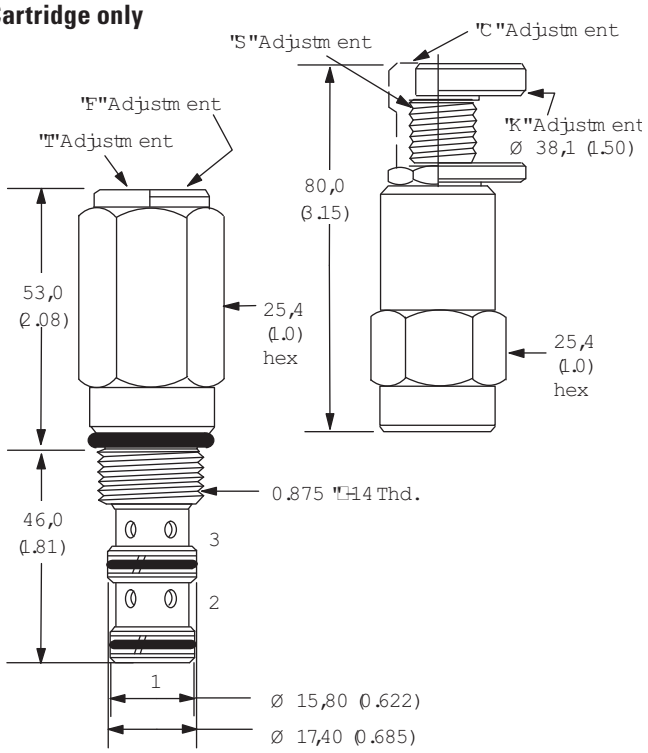

Installation drawing

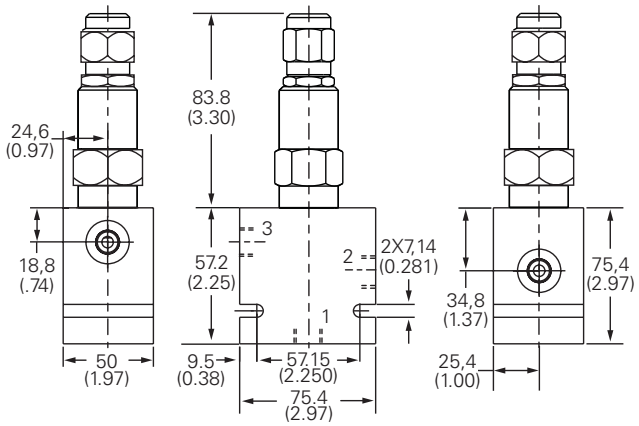

Where measurements are critical request certified drawings. We reserve the right to change specifications without notice.

E

1DS30 - Pressure sequence valve

Spool, direct acting, normally closed, internal pilot, external drain
30 L/min (8 USgpm) • 140 bar (2000 psi)

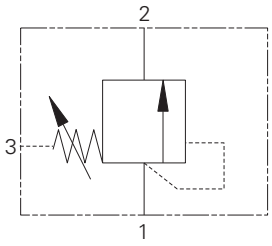

Operation

As with the direct acting relief valves, when the pressure exceeds the spring force, the spool moves back, opening the inlet to outlet.

Features

Stable, quiet operation. Cartridge construction gives maximum flexibility in mounting. Offering good repeatability and reseat.

Sectional view

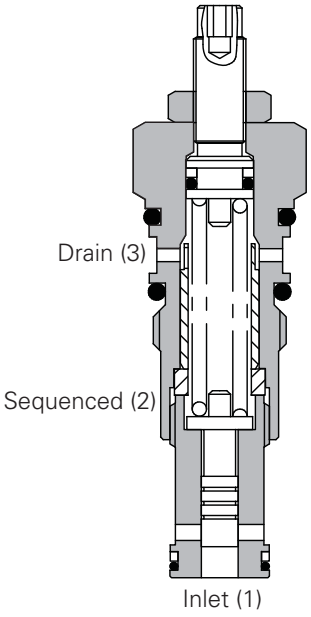

Performance data

Ratings and specifications

Figures based on: Oil Temp = 40° C Viscosity = 32 cSt (150 SUS)		
Rated flow		30 L/min (8 USgpm)
Max setting		140 bar (2000 psi)
Cartridge material		Working parts hardened and ground steel.
		External steel surfaces zinc plated.
Body material		Standard aluminium (up to 210 bar*).
		Add suffix "377" for steel option.
Mounting position		Unrestricted
Cavity number		A880 (See Section M)
Torque cartridge into cavity		60 Nm (44 lbs ft)
Weight	1DS30	0.28 kg (0.62 lbs)
	1DS35	0.88 kg (1.94 lbs)
Seal kit number		SK177 (Nitrile) SK177V (Viton)
Recommended filtration level		BS5540/4 Class 18/13 (25 micron nominal)
Operating temp		-30°C to +90°C (-22 to 194°F)
Leakage		25 milliliters/min nominal
		15 milliliters/min nominal
Nominal viscosity range		5 to 500 cSt

Viton is a registered trademark of E.I. DuPont

* For applications above 210 bar please consult our technical department or use the steel body option.

Description

Direct acting sequence valves are ideal for diverting oil to a second circuit at a predetermined pressure as in clamp and drill circuits, or as a relief where the back pressure varies. By taking the drain line directly to tank, back pressure effects are negated.

Pressure drop curves

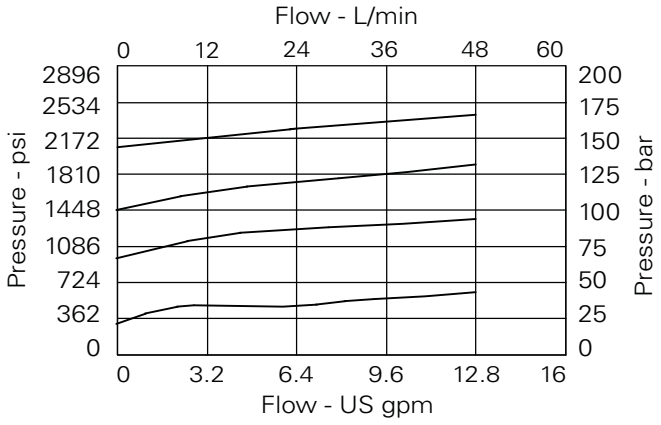

Where measurements are critical request certified drawings. We reserve the right to change specifications without notice.

1DS30 - Pressure sequence valve

Spool, direct acting, normally closed, internal pilot, external drain
30 L/min (8 USgpm) • 140 bar (2000 psi)

Model code

1DS ** – P 3W – 14 S**

1 2 3 4 5

1 Basic code

1DS30 - Cartridge Only
1DS35 - Cartridge and Body

2 Adjustment means

P - Leakproof Screw Adjustment
R - Handknob Adjustment
G - Tamperproof Cap

(See page E-7 for dimensions)

3 Port sizes - bodied valves only

Code	Port size	Housing number	
		Aluminium	Steel
4W	1/2" BSP. 1/4" BSP Drain Port	B4821	B4527
6T	3/8" SAE. 1/4" SAE Drain Port	B10793	
8T	1/2" SAE. 1/4" SAE Drain Port	B6584	

4 Pressure range @ 4.8 l/min

Note: Code based on pressure in bar.
7 - 7-70 bar Std setting 35 bar
14 - 7-140 bar Std setting 70 bar

5 Seals

S - Nitrile (For use with most industrial hydraulic oils)
SV - Viton (For high temperature and most special fluid applications)

E

Dimensions

mm (inch)

Cartridge only

Basic Code
1DS30

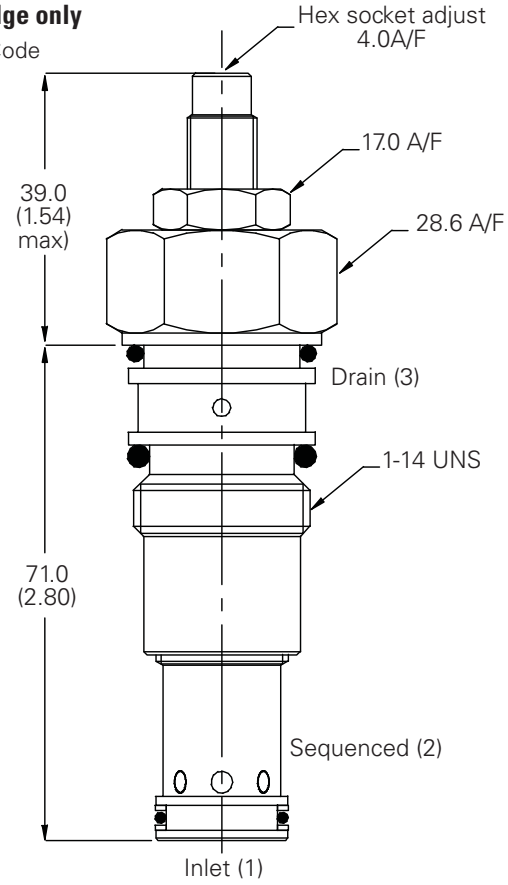

Complete valve

3/8", 1/2" Ports
Basic Code
1DS35

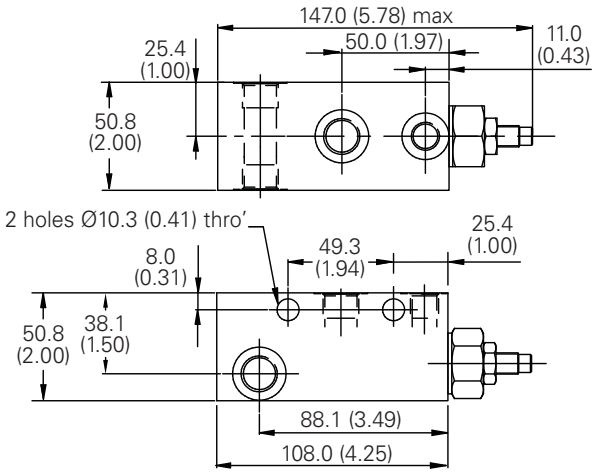

Where measurements are critical request certified drawings. We reserve the right to change specifications without notice.

1DS60 - Pressure sequence valve

Spool. direct acting, normally closed, internal pilot, external drain
60 L/min (16 USgpm) • 40 bar (580 psi)

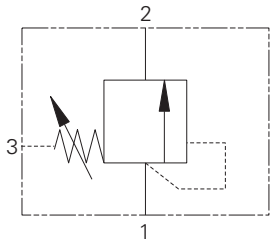

Operation

As with the direct acting relief valves, when the pressure exceeds the spring force, the spool moves back, opening the inlet to outlet.

Features

Stable, quiet operation. Cartridge construction gives maximum flexibility in mounting. Offering good repeatability and reseat.

Sectional view

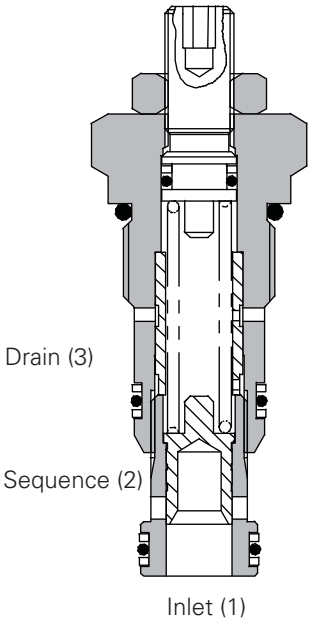

Performance data

Ratings and specifications

Figures based on: Oil Temp = 40° C Viscosity = 32 cSt (150 SUS)		
Rated flow		60 L/min (16 USgpm)
Max pressure		40 bar (580 psi)
Cartridge material		Working parts hardened and ground steel. External surfaces zinc plated.
Body material		Standard aluminium (up to 210 bar*). Add suffix "377" for steel option.
Mounting position		Unrestricted
Cavity number		CVA-22-06-0 (See Section M)
Torque cartridge into cavity		60 Nm (44 lbs ft)
Weight	1DS60	0.16 kg (0.35 lbs)
	1DS65	0.50 kg (1.10 lbs)
Seal kit number		SK618 (Nitrile), SK618V (Viton®)
Recommended filtration level		BS5540/4 Class 18/12 (25 micron nominal)
Operating temp		-30°C to +90°C (-22 to 194°F)
Leakage		25 milliliters/min nominal
Nominal viscosity range		5 to 500 cSt

Viton is a registered trademark of E.I. DuPont

***** For applications above 210 bar please consult our technical department or use the steel body option.

Description

Direct acting sequence valves are ideal for diverting oil to a second circuit at a predetermined pressure as in clamp and drill circuits, or as a relief where the back pressure varies. By taking the drain line directly to tank, back pressure effects are negated.

Pressure drop curves

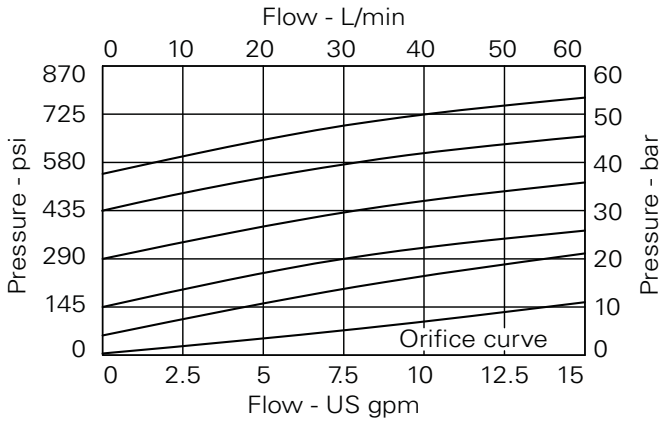

Where measurements are critical request certified drawings. We reserve the right to change specifications without notice.

1DS60 - Pressure sequence valve

Spool. direct acting, normally closed, internal pilot, external drain
60 L/min (16 USgpm) • 40 bar (580 psi)

Model code

1DS – P 3W – 4 S**

1 2 3 4 5

1 Basic code

1DS60 - Cartridge Only
1DS65 - Cartridge and Body
1DS66 - Cartridge and Body Through Ported

2 Adjustment means

P - Leakproof Screw Adjustment
R - Handknob Adjustment
G - Tamperproof Cap (See page E-7 for dimensions)

3 Port sizes - bodied valves only

Code	Port size	Housing number			
		Aluminium 1DS65	Steel 1DS65	Aluminium 1DS66	Steel 1DS66
3W	3/8" BSP 1/4" BSP Drain	B12751	B17070		
4W	1/2" BSP 1/4" BSP Drain	B8533		B13482	B13483
6T	3/8" SAE 1/4" SAE Drain	B10796			
8T	1/2" SAE 1/4" SAE Drain	B10797	B11802		

4 Pressure range @ 4,8 l/min

Note: Code based on pressure in psi.

2 - 2–20 bar Std setting 15 bar
4 - 8.5–40 bar Std setting 25 bar
Std setting made at 4.8 liters/min

5 Seals

S - Nitrile (For use with most industrial hydraulic oils)
SV - Viton (For high temperature and most special fluid applications)

Dimensions

mm (inch)

Cartridge only

Basic Code
1DS60

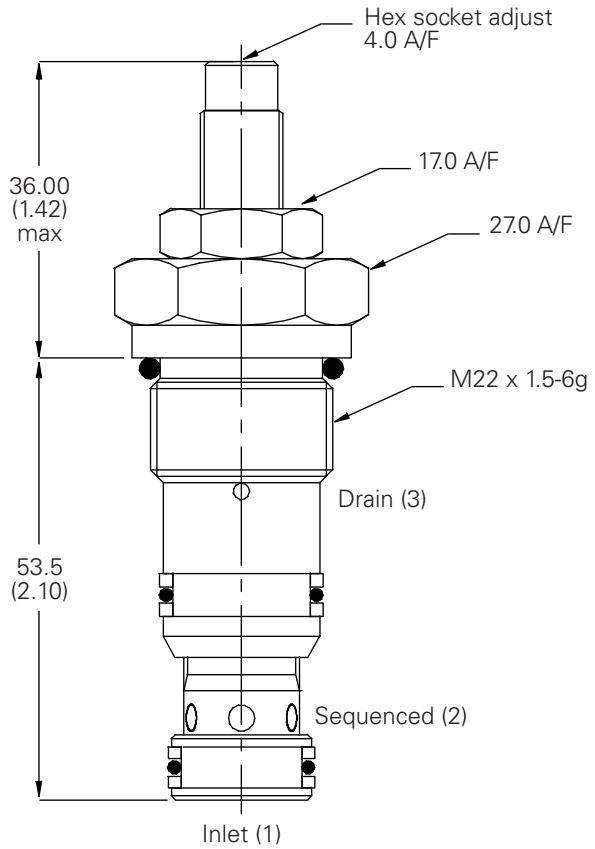

Complete valve

3/8", 1/2" Ports
Basic Code
1DS65

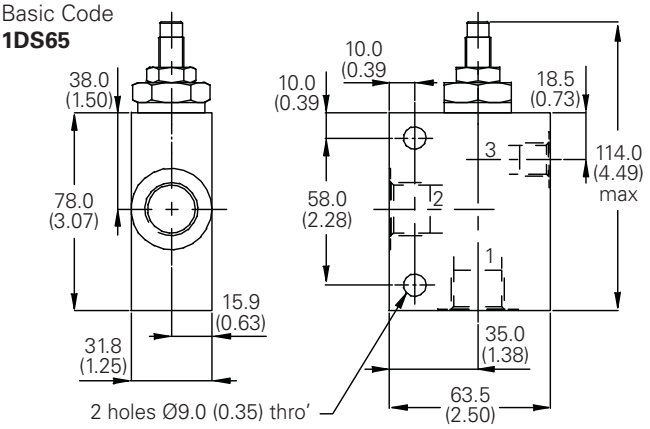

Complete valve

1/2" Ports
Basic Code
1DS66

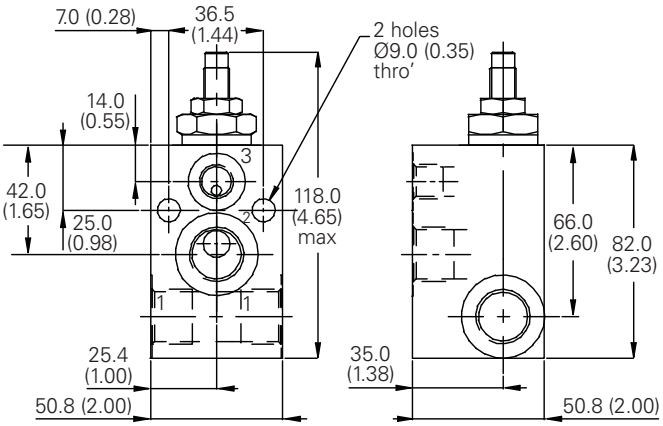

Where measurements are critical request certified drawings. We reserve the right to change specifications without notice.

E

1DS100 - Pressure sequence valve

Spool, direct acting, normally closed, internal pilot, external drain
150 L/min (40 USgpm) • 40 bar (600 psi)

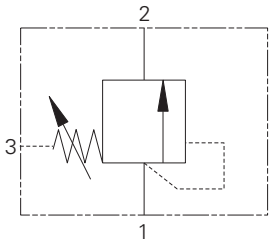

Operation

As with the direct acting relief valves, when the pressure exceeds the spring force, the spool moves back, opening the inlet to outlet.

Features

Stable, quiet operation. Cartridge construction gives maximum flexibility in mounting. Offering good repeatability and reseat.

Sectional view

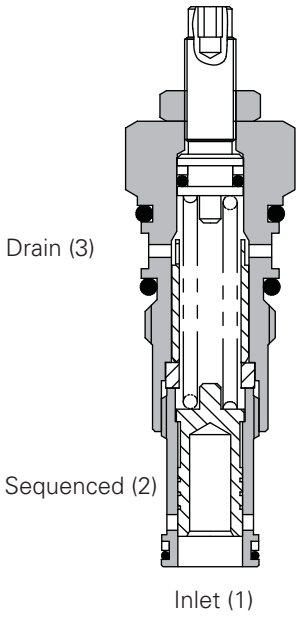

Performance data

Ratings and specifications

Figures based on: Oil Temp = 40° C Viscosity = 32 cSt (150 SUS)		
Rated flow		150 L/min (40 USgpm)
Max setting		40 bar (600 psi)
Cartridge material		Working parts hardened and ground steel.
		External steel surfaces zinc plated.
Body material		Standard aluminium (up to 210 bar*).
		Add suffix "377" for steel option.
Mounting position		Unrestricted
Cavity number		A880 (See Section 17)
Torque cartridge into cavity		60 Nm (44 lbs ft)
Weight	1DS100	0.28 kg (0.62 lbs)
	1DS145	0.88 kg (1.94 lbs)
Seal kit number		SK177 (Nitrile) SK177V (Viton)
Recommended filtration level		BS5540/4 Class 18/13 (25 micron nominal)
Operating temp		-30°C to +90°C (-20° to 194°F)
Leakage		25 milliliters/min nominal
		15 milliliters/min nominal
Nominal viscosity range		5 to 500 cSt

Viton is a registered trademark of E.I. DuPont

* For applications above 210 bar please consult our technical department or use the steel body option.

Description

Direct acting sequence valves are ideal for diverting oil to a second circuit at a predetermined pressure as in clamp and drill circuits, or as a relief where the back pressure varies. By taking the drain line directly to tank, back pressure effects are negated.

Pressure drop curves

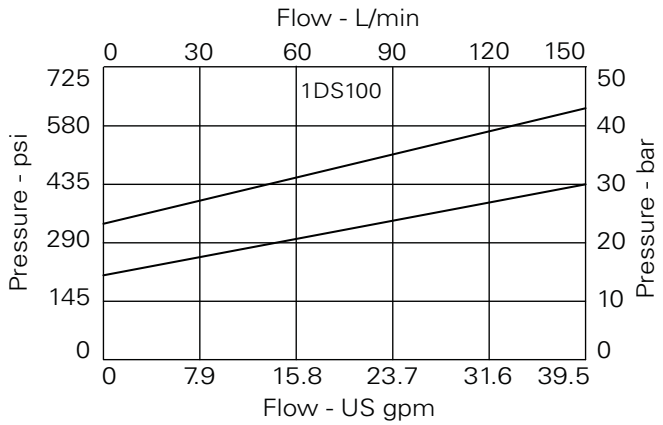

Where measurements are critical request certified drawings. We reserve the right to change specifications without notice.

1DS100 - Pressure sequence valve

Spool, direct acting, normally closed, internal pilot, external drain
150 L/min (40 USgpm) • 40 bar (600 psi)

Model code

1DS ** – P 3W – 14 S**

1 2 3 4 5

1 Basic code

1DS100 - Cartridge Only
1DS145 - Cartridge and Body

2 Adjustment means

P - Leakproof Screw Adjustment
R - Handknob Adjustment
G - Tamperproof Cap
(See page E-7 for dimensions)

3 Port sizes - bodied valves only

Code	Port size	Housing number	
		Aluminium	Steel
4W	1/2" BSP. 1/4" BSP Drain	B4821	B4527
6W	3/4" BSP. 1/4" BSP Drain	B5466	B4403
6T	3/8" SAE. 1/4" SAE Drain	B10793	
8T	1/2" SAE. 1/4" SAE Drain	B6584	
12T	3/4" SAE. 1/4" SAE Drain	B7883	B11379

4 Pressure range @ 4,8 l/min

Note: Code based on pressure in bar.
2 - 2-25 bar std setting 35 bar
4 - 5-40 bar std setting 28 bar

5 Seals

S - Nitrile (For use with most industrial hydraulic oils)
SV - Viton (For high temperature and most special fluid applications)

Dimensions

mm (inch)

Cartridge only

Basic Code
1DS100

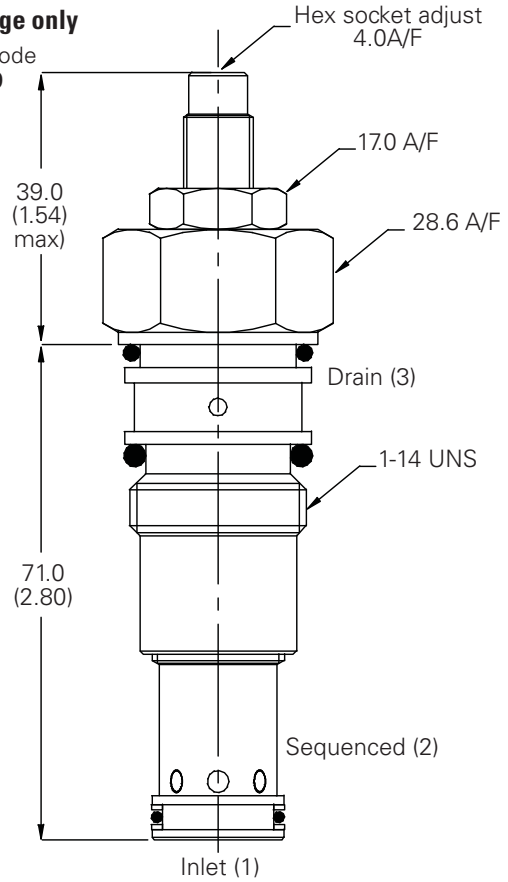

Complete valve

3/8", 1/2", 3/4" Ports
Basic Code
1DS145

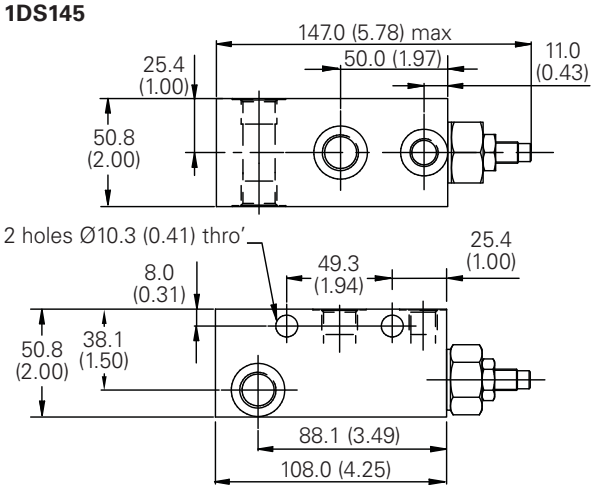

Where measurements are critical request certified drawings. We reserve the right to change specifications without notice.

E

1PS60 - Pressure sequence valve

Spool, pilot operated, normally closed, internal pilot, external drain
60 L/min (16 USgpm) • 350 bar (5000 psi)

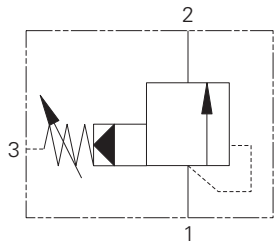

Operation

As in the pilot operated relief, when the setting of the valve is exceeded the pilot section opens.

This pilot flow causes a pressure imbalance opening the main section and allowing flow to a secondary circuit (sequenced line).

Features

Hardened steel working parts give long, trouble-free life. Selectively matched honed assemblies give accurate performance.

Sectional view

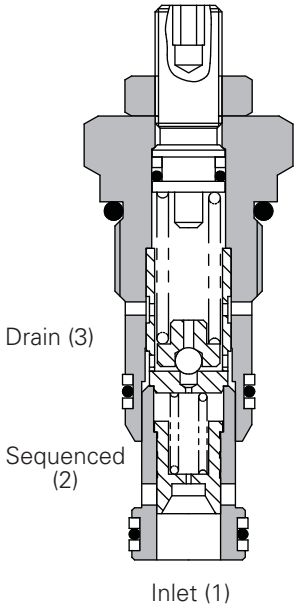

Performance data

Ratings and specifications

Figures based on: Oil Temp = 40° C Viscosity = 32 cSt (150 SUS)		
Rated flow		60 L/min (16 USgpm)
Max setting		350 bar (5000 psi)
Cartridge material		Working parts hardened and ground steel.
		External surfaces zinc plated.
Body material		Standard aluminium (up to 210 bar*).
		Add suffix "377" for steel option.
Mounting position		Unrestricted
Cavity number		CVA-22-06-0 (See Section M)
Torque cartridge into cavity		60 Nm (44 lbs ft)
Weight	1PS60	0.16 kg (0.35 lbs)
	1PS65	0.50 kg (1.10 lbs)
Seal kit number		SK618 (Nitrile) SK618V (Viton®)
Filtration		BS5540/4 Class 18/12 (25 micron nominal)
Operating temp		-30°C to +90°C (-22°C to +194°F)
Leakage		35 milliliters/min @ 280 bar
Nominal viscosity range		5 to 500 cSt

Viton is a registered trademark of E.I. DuPont

Description

Pilot operated models are best suited for higher flows which may vary widely to:

1. Provide ordered or sequenced series of operations as in a clamp and drill circuit.
2. Serve as a relief valve where oil viscosity or restrictions in the downstream line would cause excessive back pressure. The separate spring chamber drain makes the sequence valve insensitive to this back pressure.

Pressure drop curves

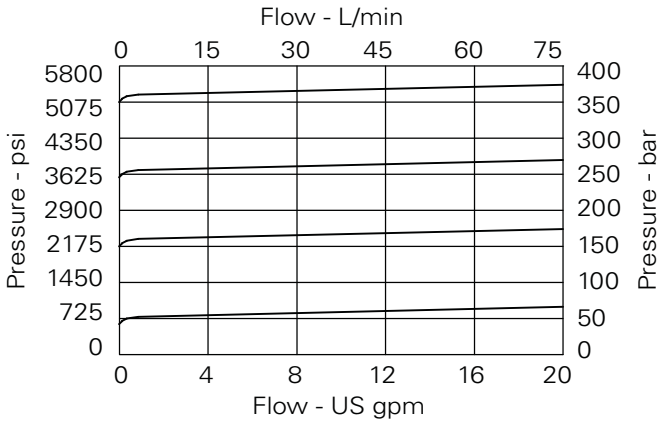

Where measurements are critical request certified drawings. We reserve the right to change specifications without notice.

1PS60 - Pressure sequence valve

Spool, pilot operated, normally closed, internal pilot, external drain
60 L/min (16 USgpm) • 350 bar (5000 psi)

Model code

1PS ** – P 3W – 35 S**

1 2 3 4 5

1 Basic Code

1PS60 - Cartridge Only
1PS65 - Cartridge and Body

2 Adjustment Means

P - Leakproof Screw Adjustment
R - Handknob Adjustment
G - Tamperproof Cap (See page E-7 for dimensions)

3 Port sizes - bodied valves only

Code	Port size	Housing number	
		Aluminium Single	Steel Single
3W	3/8" BSP 1/4" BSP Drain Port	B12751	B17070
4W	1/2" BSP 1/4" BSP Drain Port	B8533	
6T	3/4" SAE 1/4" SAE Drain Port	B10796	
8T	1/2" SAE 1/4" SAE Drain Port	B10797	B11802

4 Pressure range @4,8 L/min

Note: Code based on pressure in bar.
10 - 7-100 bar
Std setting 35 bar
20 - 10-210 bar
Std setting 100 bar
35 - 20–350 bar
Std setting 280 bar
Std setting made at 4.8 liters min

5 Seals

S - Nitrile (For use with most industrial hydraulic oils)
SV - Viton (For high temperature and most special fluid applications)

Dimensions

mm (inch)

Note: Tightening torque of "F" adjuster locknut - 20 to 25 Nm

Note: For applications above 210 bar please consult our technical department or use the steel body option.

Cartridge only

Basic Code
1PS160

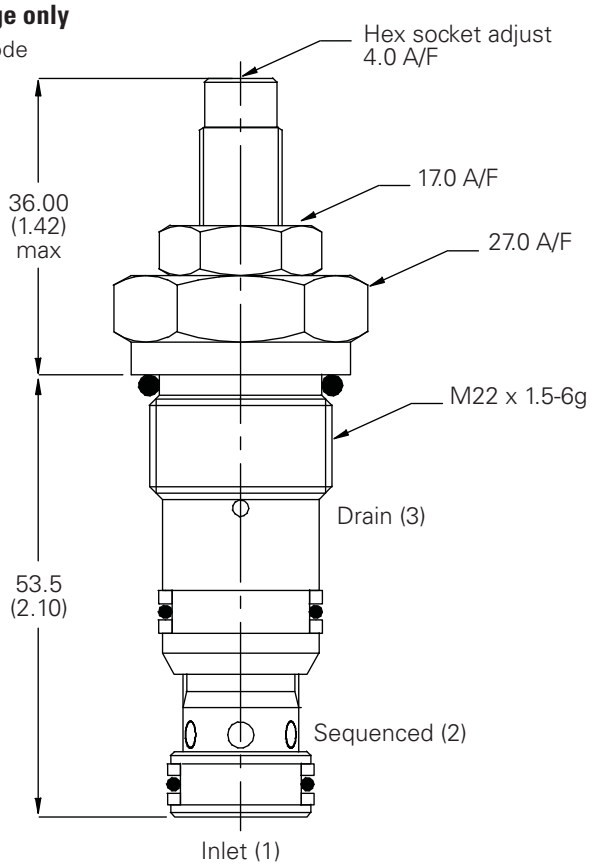

Complete valve

3/8", 1/2" Ports
Basic Code
1PS65

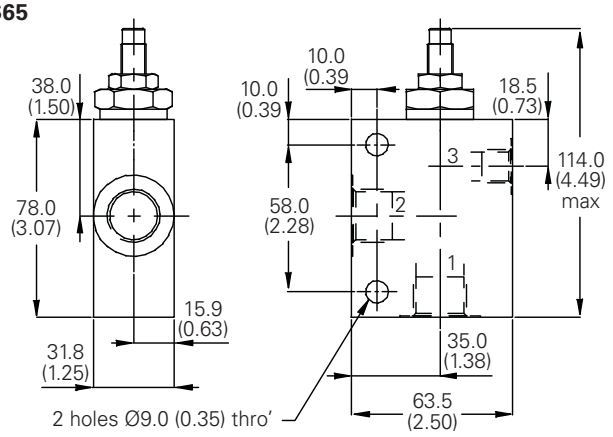

Where measurements are critical request certified drawings. We reserve the right to change specifications without notice.

E

1PS100 - Pressure sequence valve

Spool, pilot operated, normally closed, internal pilot, external drain
150 L/min (40 USgpm) • 350 bar (5000 psi)

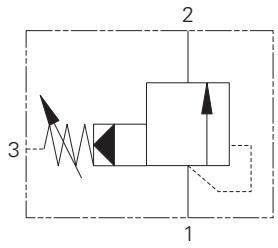

Operation

As in the pilot operated relief, when the setting of the valve is exceeded the pilot section opens.

This pilot flow causes a pressure imbalance opening the main section and allowing flow to a secondary circuit (sequenced line).

Features

Hardened steel working parts give long, trouble-free life. Selectively matched honed assemblies give accurate performance.

Sectional view

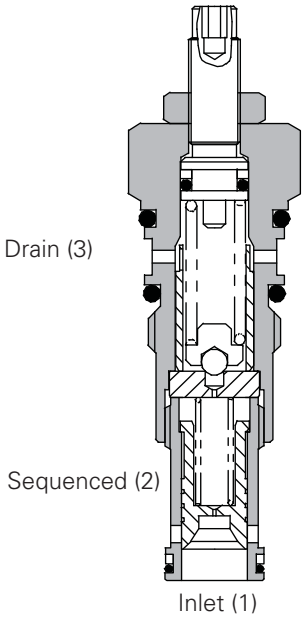

Performance data

Ratings and specifications

Figures based on: Oil Temp = 40° C Viscosity = 40 cSt		
Rated flow		150 L/min (40 USgpm)
Max setting		350 bar (5000 psi)
Cartridge material		Working parts hardened and ground steel.
		External surfaces zinc plated.
Body material		Standard aluminium (up to 210 bar*).
		Add suffix "377" for steel option.
Mounting position		Unrestricted
Cavity number		A880 (See Section M)
Torque cartridge into cavity		60 Nm (44 lbs ft)
Weight	1PS100	0.17 kg (0.37 lbs)
	1PS145	0.56 kg (1.23 lbs)
Seal kit number		SK177 (Nitrile) SK177V (Viton®)
Filtration		BS5540/4 Class 18/13 (25 micron nominal)
Operating temp		-30°C to +90°C (-22° to +194°F)
Leakage		35 milliliters/min @ 280 bar
Nominal viscosity range		5 to 500 cSt

Viton is a registered trademark of E.I. DuPont

Description

Pilot operated models are best suited for higher flows which may vary widely to:

1. Provide ordered or sequenced series of operations as in a clamp and drill circuit.
2. Serve as a relief valve where oil viscosity or restrictions in the downstream line would cause excessive back pressure. The separate spring chamber drain makes the sequence valve insensitive to this back pressure.

Pressure drop curves

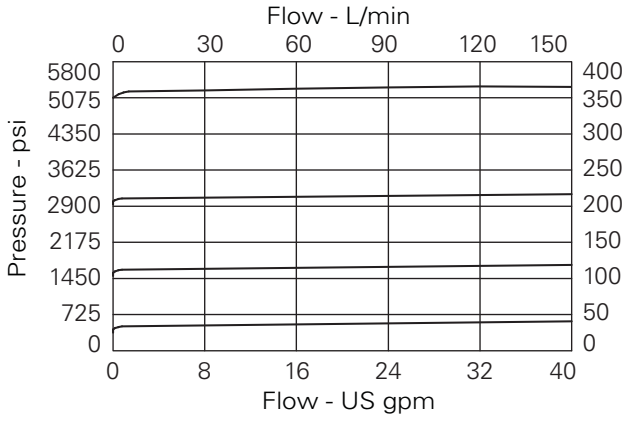

Where measurements are critical request certified drawings. We reserve the right to change specifications without notice.

1PS100 - Pressure sequence valve

Spool, pilot operated, normally closed, internal pilot, external drain
150 L/min (40 USgpm) • 350 bar (5000 psi)

Model code

1PS* – P 3W – 35 S**

1 2 3 4 5

1 Basic code

1PS100 - Cartridge Only
1PS145 - Cartridge and Body
1PS155 - Cartridge, Body and Check

2 Adjustment means

P - Leakproof Screw Adjustment
R - Handknob Adjustment
G - Tamperproof Cap (See page E-7 for dimensions)

3 Port sizes - bodied valves only

Code	Port size	Housing number	
		Aluminium Single	Steel Single
1PS145			
4W	1/2" BSP. 1/4" BSP Drain Port	B4821	B4527
6W	3/4" BSP. 1/4" BSP Drain Port	B5466	B4403
6T	3/8" SAE. 1/4" SAE Drain Port	B10793	
8T	1/2" SAE. 1/4" SAE Drain Port	B6584	
12T	3/4" SAE. 1/4" SAE Drain Port	B7883	B11379

4 Pressure range @ 14 L/min

Note: Code based on pressure in bar.

7 - 2–70 bar. Std setting 35 bar
20 - 10–210 bar. Std setting 100 bar
35 - 50–350 bar. Std setting 280 bar

5 Seals

S - Nitrile (For use with most industrial hydraulic oils)
SV - Viton (For high temperature and most special fluid applications)

Dimensions

mm (inch)

Note: Tightening torque of "F" adjuster locknut - 20 to 25 Nm

Note: For applications above 210 please consult our technical department or use the steel body option.

Cartridge only

Basic Code
1PS100

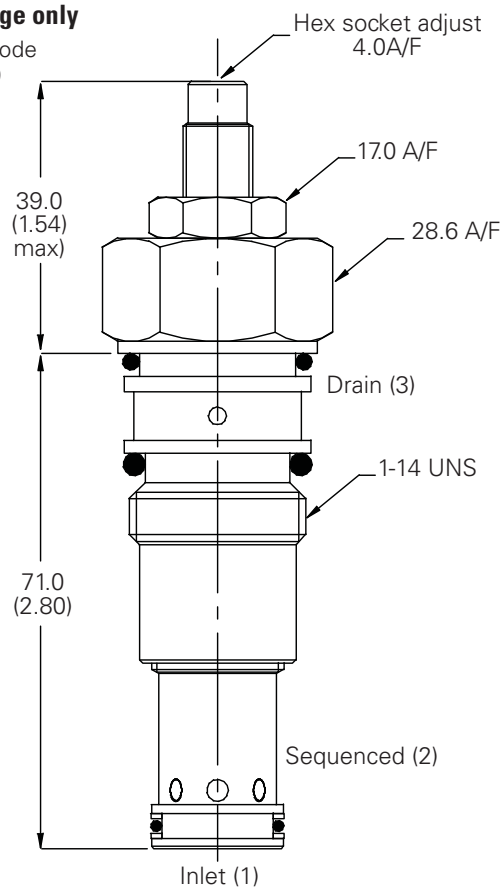

Complete valve

3/8", 1/2" , 3/4" Ports
Basic Code
1PS145

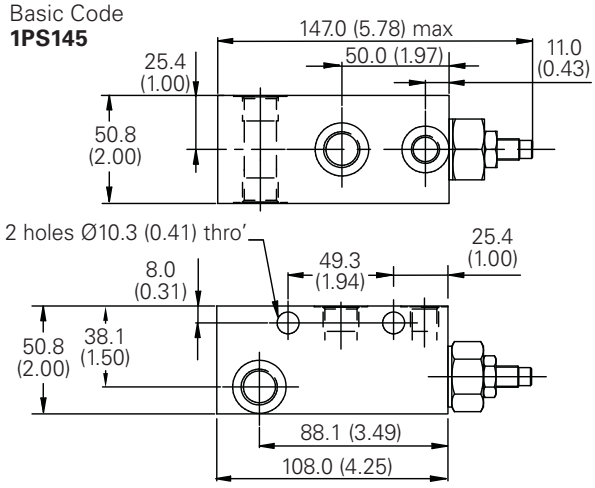

Where measurements are critical request certified drawings. We reserve the right to change specifications without notice.

E

PSV1-16 - Pressure sequence valve

Spool, pilot operated, normally closed, internal pilot, external drain
95 L/min (25 USgpm) • 350 bar (5000 psi)

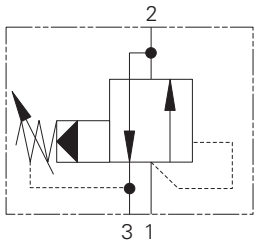

Operation

In the normal condition port 2 is open to the tank port 3 and port 1 is blocked.

When the pressure on port 1 exceeds the setting of the valve port 1 opens to port 2 and port 3 is blocked but must always be referenced to tank.

Features

Hardened steel working parts give long, trouble-free life. Selectively matched honed assemblies give accurate performance.

Sectional view

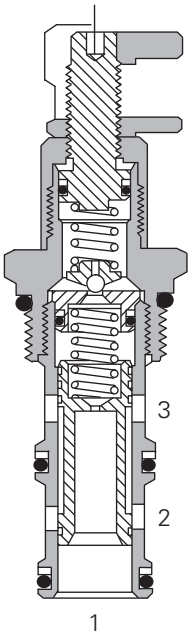

Performance data

Ratings and specifications

Performance data is typical with fluid at 21,8 cSt (105 SUS) and 49° C (120° F)	
Typical application pressure (all ports)	350 bar (5000 psi)
Cartridge fatigue pressure (infinite life)	350 bar (5000 psi)
Maximum sequence pressure	415 bar (6000 psi)
Rated flow	95 L/min (25 USgpm)
Cavity	C-16–3
Standard housing materials	Aluminum or steel
Temperature range	-40° to 120°C (-40° to 248°F)
Fluids	All general purpose hydraulic fluids such as: MIL–H–5606, SAE 10, SAE 20, etc.
Filtration	Cleanliness Code 18/**16/13**
Weight cartridge only	0,24 kg (0.53 lbs)
Seal kits	565811 Buna–N 889610 Viton®

Viton is a registered trademark of E.I. DuPont

Description

This is a pilot operated, spool type, internally piloted, externally drained screw in cartridge pressure sequence valve. In its normal position port 2 is open to the tank line port 3.

Pressure drop curve

Port 1 to 2, valve fully open, spring omitted
Cartridge only

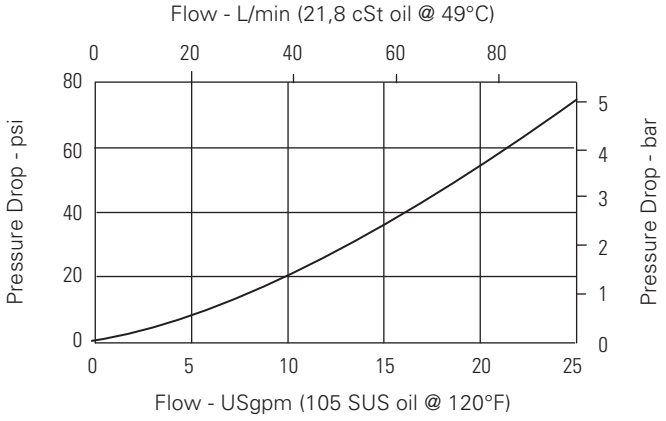

Where measurements are critical request certified drawings. We reserve the right to change specifications without notice.

PSV1-16 - Pressure sequence valve

Spool, pilot operated, normally closed, internal pilot, external drain
95 L/min (25 USgpm) • 350 bar (5000 psi)

Model code

PSV1 – 16 (V) – * – (*) – * – **/ ** – 00**

1 2 3 4 5 6 7 8 9

1 Function

PSV1 - Pressure sequence valve

2 Size

16 - 16 size

3 Seal material

Blank - Buna-N
V - Viton®

4 Adjustment

C - Cap
K - Knob
S - Screw

5 Valve housing material

Blank - Aluminum
S - Steel

6 Port size

0 - Cartridge only

Code	Port size	Housing number		
		Aluminum light duty	Aluminum fatigue rated	Steel fatigue rated
6B	3/4" BSPP	02–175465	–	–
4G	1/2" BSPP	–	876720	02–175131
6G	3/4" BSPP	–	876722	02–175132
10H	SAE 10	–	876721	–
12H	SAE 12	–	876723	–
10T	SAE 10	–	–	02–175129
12T	SAE 12	566152	–	02–175130

See section J for housing.

7 Sequence pressure range

Note: Code based on pressure in psi.

30 - 34-210 bar (500-3000 psi)

60 - 70-415 bar (1000-6000 psi)

8 Setting pressure

Within ranges in **7**

Blank - Normal factory setting at approximate mid-range. User requested settings in 3,45 bar (50 psi) steps, Coded as in the following examples:

10 - 70 bar (1000 psi)
10.5 - 72,4 bar (1050 psi)

9 Special features

00 - None
(Only required if valve has special features, omitted if "00.")

Dimensions

mm (inch)

Cartridge only

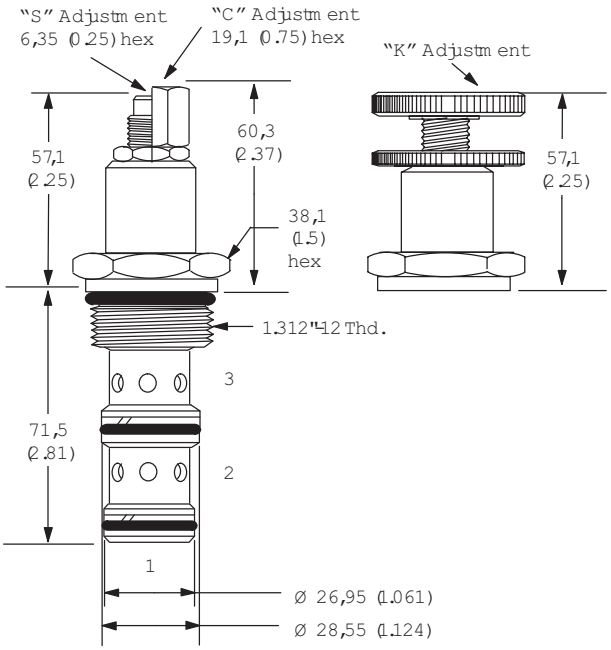

Installation drawing (Steel)

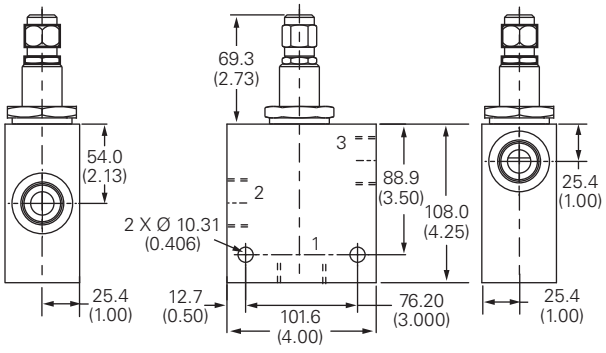

Torque cartridge in housing
A - 108-122 Nm (80-90 ft. lbs)
S - 136-149 Nm (100-110 ft. lbs)

⚠ Warning

Aluminum housings can be used for pressures up to 210 bar (3000 psi). Steel housings must be used for operating pressures above 210 bar (3000 psi).

Where measurements are critical request certified drawings. We reserve the right to change specifications without notice.

1PS200 - Pressure sequence valve

Spool, pilot operated, normally closed, internal pilot, external drain
250 L/min (60 USgpm) • 350 bar (5000 psi)

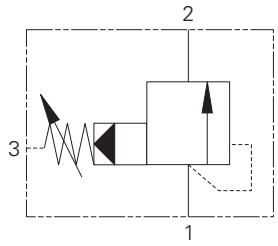

Operation

As in the pilot operated relief, when the setting of the valve is exceeded the pilot section opens.

This pilot flow causes a pressure imbalance opening the main section and allowing flow to a secondary circuit (sequenced line).

Features

Hardened steel working parts give long, trouble-free life. Selectively matched honed assemblies give accurate performance.

Sectional view

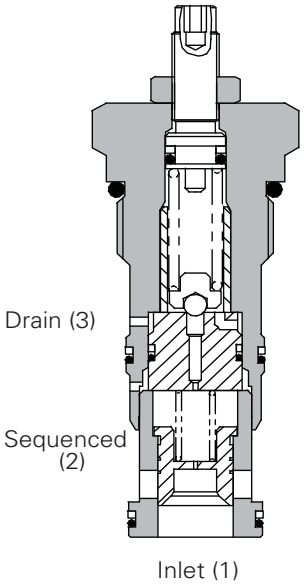

Performance data

Ratings and specifications

Figures based on: Oil Temp = 40° C Viscosity = 32 cSt (150 SUS)		
Rated flow		250 L/min (60 USgpm)
Max setting		350 bar (5000 psi)
Cartridge material		Working parts hardened and ground steel. External surfaces zinc plated.
Body material		Standard aluminium (up to 210 bar*). Add suffix "377" for steel option.
Mounting position		Unrestricted
Cavity number		A16102 (See Section M)
Torque cartridge into cavity		100 Nm (76 lbs ft)
Weight	1PS200	0.72 kg (1.60 lbs)
	1PS250	1.62 kg (3.60 lbs)
Seal kit number		SK173 (Nitrile) SK173V (Viton®)
Filtration		BS5540/4 Class 18/13 (25 micron nominal)
Operating temp		-30°C to +90°C (-22°C to 194°F)
Leakage		35 milliliters/min @ 280 bar
Nominal viscosity range		5 to 500 cSt

Viton is a registered trademark of E.I. DuPont

Description

Pilot operated models are best suited for higher flows which may vary widely to:

1. Provide ordered or sequenced series of operations as in a clamp and drill circuit.
2. Serve as a relief valve where oil viscosity or restrictions in the downstream line would cause excessive back pressure. The separate spring chamber drain makes the sequence valve insensitive to this back pressure.

Pressure drop curves

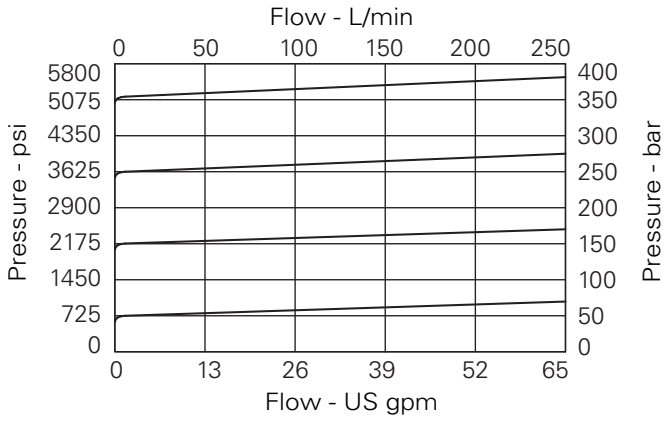

Where measurements are critical request certified drawings. We reserve the right to change specifications without notice.

1PS200 - Pressure sequence valve

Spool, pilot operated, normally closed, internal pilot, external drain
250 L/min (60 USgpm) • 350 bar (5000 psi)

Model code

1PS* – P 6W – 35 S**

1 2 3 4 5

1 Basic code

1PS200 - Cartridge Only
1PS250 - Cartridge and Body

2 Adjustment means

P - Leakproof Screw Adjustment
R - Handknob Adjustment
G - Tamperproof Cap (See page E-7 for dimensions)

3 Port sizes - bodied valves only

Code	Port size	Housing number	
		Aluminium	Steel
8W	1" BSP. 1/4" BSP Drain Port	B3496	B3497
16T	1" SAE. 1/4" SAE Drain Port	B6807	B11555

4 Pressure Range @ 14 L/min

Note: Code based on pressure in bar.

20 - 10–210 bar
Std setting 100 bar
35 - 50-350 bar
Std setting 100 bar
Std setting made at 14 L/min

5 Seals

S - Nitrile (For use with most industrial hydraulic oils
SV - Viton (For high temperature and most special fluid applications))

Dimensions

mm (inch)

Note: Tightening torque of "F" adjuster locknut - 20 to 25 Nm

Note: For applications above 210 please consult our technical department or use the steel body option.

Cartridge only

Basic Code
1PS200

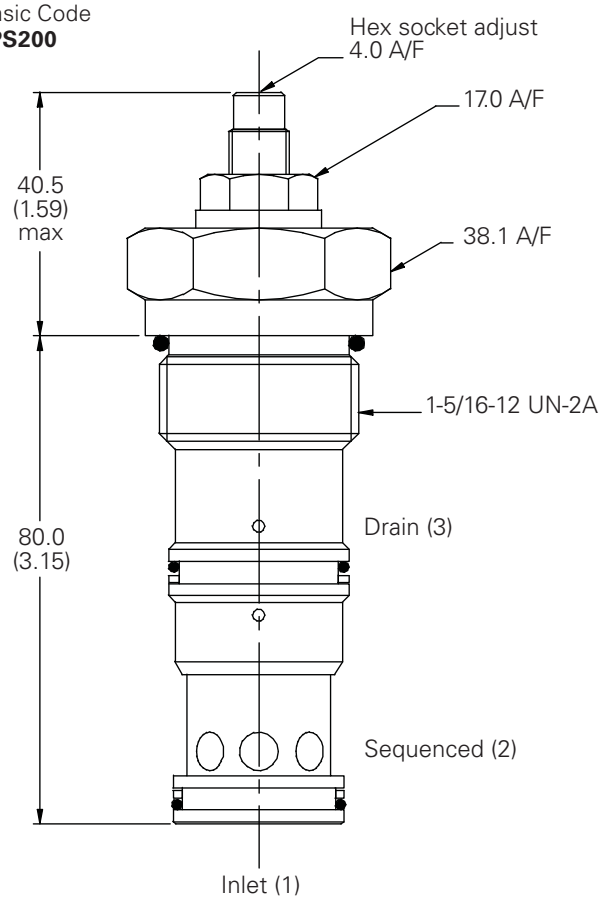

Complete valve

1" Ports
Basic Code
1PS250

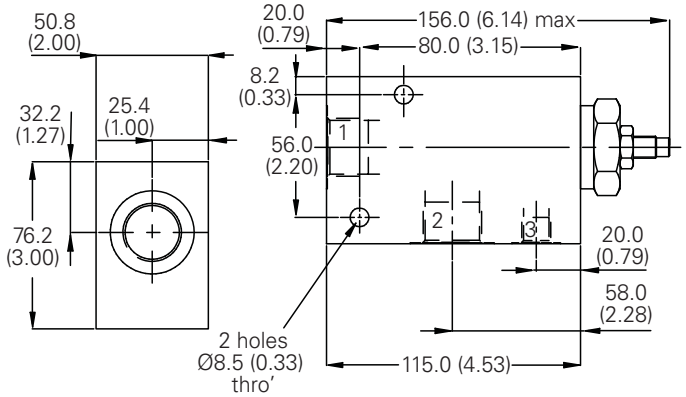

Where measurements are critical request certified drawings. We reserve the right to change specifications without notice.

E

PSV11-16 - 16 -Pressure sequence valve

Spool, pilot operated, normally closed, internal pilot, external drain
230 L/min (60 USgpm) • 350 bar (5000 psi)

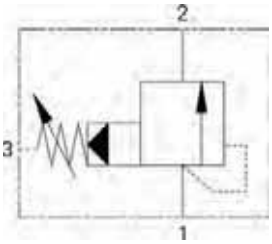

Operation

The PSV11-16 valve remains normally closed until a predetermined pressure is reached at port 1, which then allows from to port 2 (port 3 must be vented).

Features

Hardened steel working parts give long, trouble-free life. Selectively matched honed assemblies give accurate performance.

Sectional view

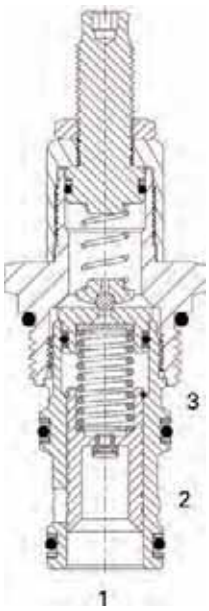

Performance data

Ratings and specifications

Performance data is typical with fluid at 21,8 cSt (105 SUS) and 49° C (120° F)	
Typical application pressure (all ports)	350 bar (5000 psi)
Cartridge fatigue pressure (infinite life)	350 bar (5000 psi)
Maximum sequence pressure	415 bar (6000 psi)
Rated flow	230 L/min (60 USgpm)
Cavity	C-16–3S
Standard housing materials	Aluminum or steel
Temperature range	-40° to 120°C (-40° to 248°F)
Fluids	All general purpose hydraulic fluids such as: MIL–H–5606, SAE 10, SAE 20, etc.
Filtration	Cleanliness Code 18/16/13
Weight cartridge only	0,24 kg (0.53 lbs)
Seal kits	889659 Buna–N 02-165871 Viton®

Viton is a registered trademark of E.I. DuPont

Description

The PSV11-16 is a pilot operated, sliding spool, adjustable, cartridge type pressure sequence valve. This valve, which is internally piloted is used to control the sequence of operations of two or more actuators.

Pressure drop curve

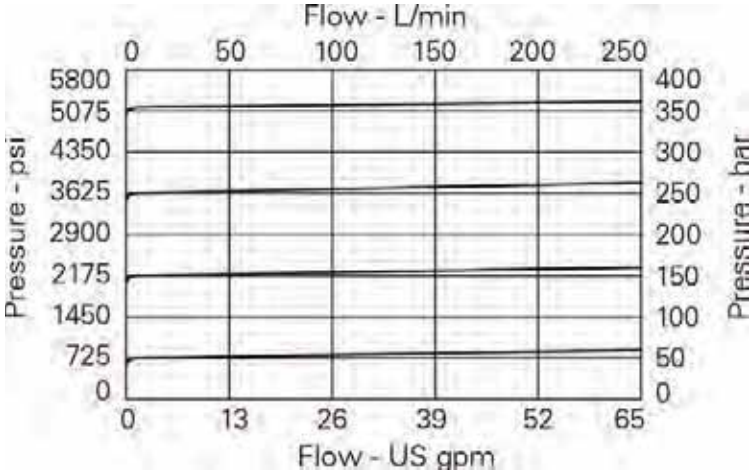

Where measurements are critical request certified drawings. We reserve the right to change specifications without notice.

PSV11-16 - 16 - Pressure sequence valve

Spool, pilot operated, normally closed, internal pilot, external drain
230 L/min (60 USgpm) • 350 bar (5000 psi)

Model code

PSV11 – 16 (V) – * – (*) – * – **/ ** – 00**

1 2 3 4 5 6 7 8 9

1 Function

PSV11 - Pressure sequence valve

2 Size

16 - 16 size

3 Seal material

Blank - Buna-N
V - Viton®

4 Adjustment

C - Cap
K - Knob
S - Screw

5 Valve housing material

Blank - Aluminum
S - Steel

6 Port size

0 - Cartridge only

Code	Port size	Housing number		
		Aluminum light duty	Aluminum fatigue rated	Steel fatigue rated
4G	1/2" BSPP	02-175471	02-160676	02-175118
6G	3/4" BSPP	–	876726	02-175119
10H	SAE 10	–	876725	–
12H	SAE 12	–	876727	–
10T	SAE 10	–	–	02-175116
12T	SAE 12	566414	–	02175117

See section J for housing.

7 Sequence Pressure Range

Note: Code based on pressure in psi.

30 - 34-210 bar (500-3000 psi)
60 - 70-415 bar (1000-6000 psi)

8 Setting pressure

Within ranges in **7**

Blank - Normal factory setting at approximate mid-range. User requested settings in 3,45 bar (50 psi) steps, Coded as in the following examples:

10 - 70 bar (1000 psi)
10.5 - 72,4 bar (1050 psi)

9 Special features

00 - None
(Only required if valve has special features, omitted if "00.")

Dimensions

mm (inch)

Cartridge only

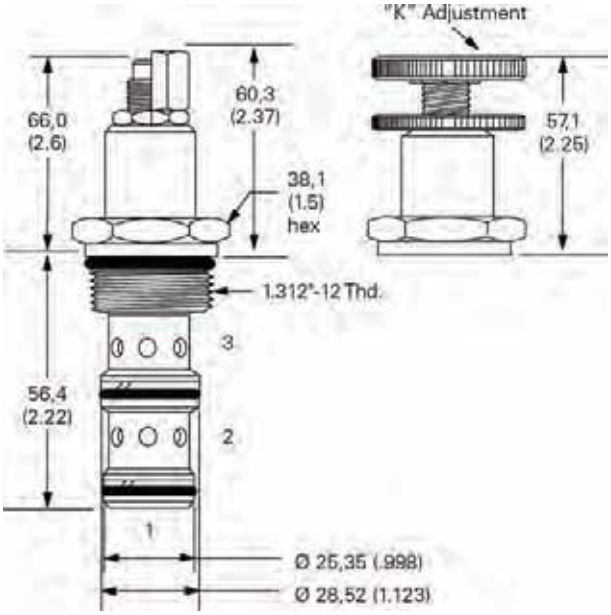

Installation drawing (Steel)

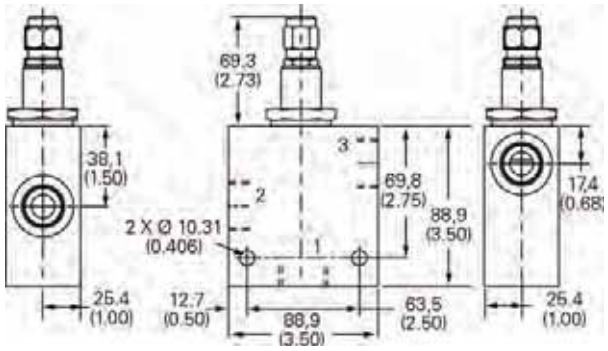

Torque cartridge in housing
A - 108-122 Nm (80-90 ft. lbs)
S - 136-149 Nm (100-110 ft. lbs)

⚠ Warning

Aluminum housings can be used for pressures up to 210 bar (3000 psi). Steel housings must be used for operating pressures above 210 bar (3000 psi).

Where measurements are critical request certified drawings. We reserve the right to change specifications without notice.

1PSC30 - Pressure sequence valve

Poppet, direct acting, normally closed, internal pilot, external drain, reverse flow check
30 L/min (8 USgpm) • 350 bar (5000 psi)

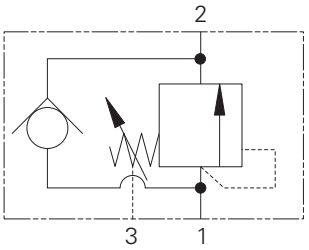

Operation

As with the direct acting relief valves, when the pressure exceeds the spring force, the spool moves back, opening the inlet to outlet.

Features

Match ground and honed hardened working parts give long, trouble-free life. Consistent stable operation providing low pressure rise due to increasing flow.

Cartridge construction gives maximum flexibility in mounting. Steel valve bodies available on request.

Sectional view

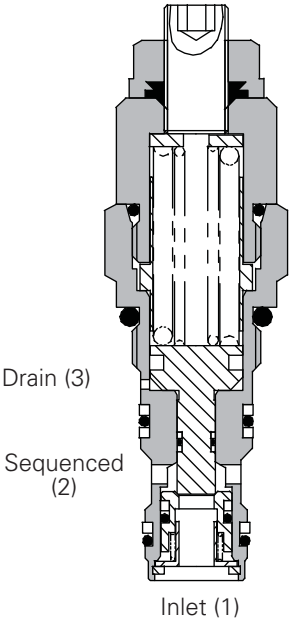

Performance data

Ratings and specifications

Figures based on: Oil Temp = 40° C Viscosity = 32 cSt (150 SUS)		
Rated flow		30 L/min (8 USgpm)
Max setting		350 bar (5000 psi)
Cartridge material		Working parts hardened and ground steel.
		External steel surfaces zinc plated.
Body material		Standard aluminium (up to 210 bar*).
		Add suffix "377" for steel.
Mounting position		Unrestricted
Cavity number		A6610 (See Section M)
Torque cartridge into cavity		45 Nm (33 lbs ft)
Weight	PSC30	0.15 kg (0.33 lbs)
	PSC35	0.41kg (0.90 lbs)
Seal kit number		SK395 (Nitrile)
		SK395V (Viton®)
Recommended filtration level		BS5540/4 Class 18/13 (25 micron nominal)
Operating temp		-30°C to +90°C (-22°C to 194°F)
Leakage		0.3 milliliters/min nominal (5 dpm)
Nominal viscosity range		5 to 500 cSt

Viton is a registered trademark of E.I. DuPont

Description

Sequence valves provide ordered sequencing of two or more operations as with clamp and drill circuits. They can also be used as relief valves where the downstream pressure is high or changes during operation. By taking the drain line directly to tank, back pressure effects are negated.

Pressure drop curves

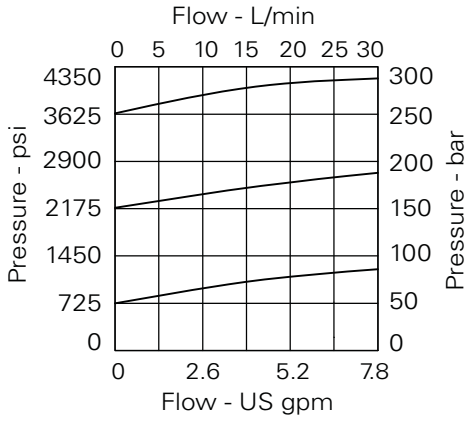

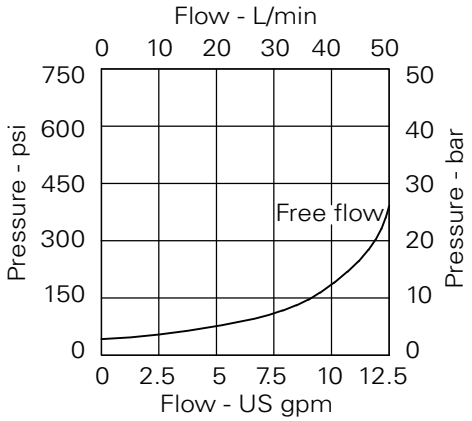

Where measurements are critical request certified drawings. We reserve the right to change specifications without notice.

1PSC30 - Pressure sequence valve

Poppet, direct acting, normally closed, internal pilot, external drain, reverse flow check
30 L/min (8 USgpm) • 350 bar (5000 psi)

Model code

1PSC – F 3W – 20 S**

1 2 3 4 5

1 Function

1PSC30 - Cartridge Only
1PSC30 - Cartridge and body

2 Adjustment means

F - Screw adjustment
N - Fixed - State pressure Setting required

3 Port sizes

Code	Port size	Housing number - body only	
		Aluminium	Steel
3W	3/8" BSP Valve & Cyl Port. 1/4" BSP Pilot Port	B6743	B12823
6T	3/8" SAE Valve & Cyl Port. 1/4" SAE Pilot Port	B10536	
8T	1/2" SAE Valve & Cyl Port. 1/4" SAE Pilot Port	B7884	B11811

4 Pressure Range @ 4,8 L/min

Note: Code based on pressure in bar.
10 - 10–100 bar. Std setting 70 bar
20 - 60–210 bar. Std setting100 bar
35 - 70–350 bar. Std setting 210 bar

5 Seals

S - Nitrile (For use with most industrial hydraulic oils)
SV - Viton (For high temperature and most special fluid applications)

Dimensions

mm (inch)

Cartridge only

Basic Code
1PSC30

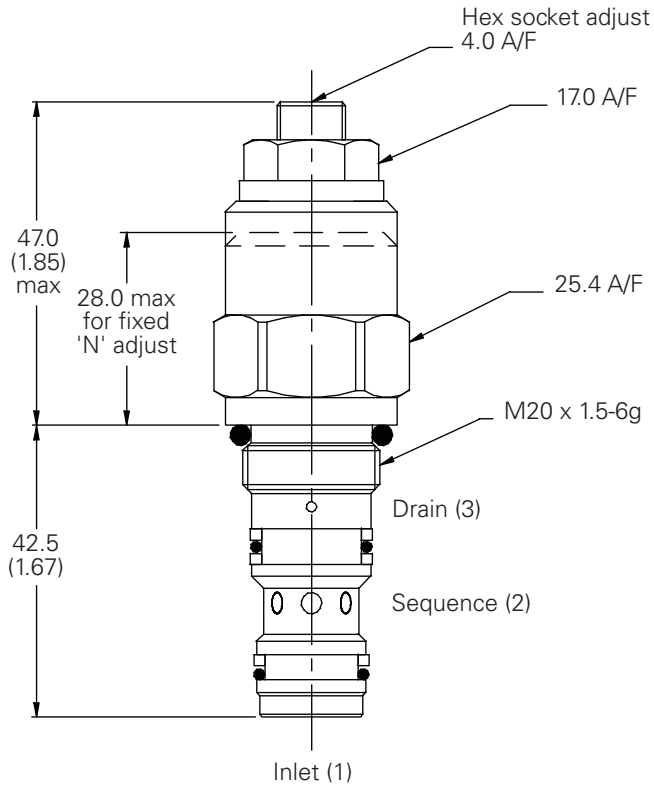

Complete valve

3/8", 1/2" Ports
Basic Code
1PSC35

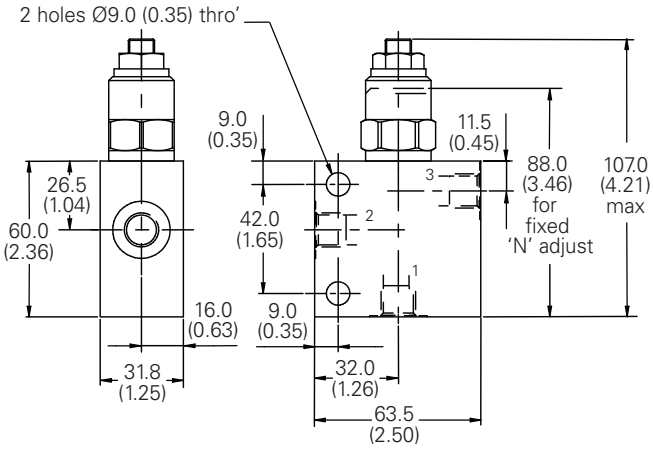

Note: Tightening torque of "F" adjuster locknut - 20 to 25 Nm.

Note: For applications above 210 bar please consult our technical department or use the steel body option.

Where measurements are critical request certified drawings. We reserve the right to change specifications without notice.

1PSC100 - Pressure sequence valve

Poppet, pilot operated, normally closed, internal pilot, external drain, reverse flow check
150 L/min (40 USgpm) • 350 bar (5000 psi)

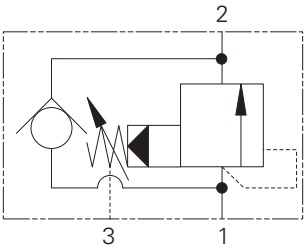

Operation

As in the pilot operated relief, when the setting of the valve is exceeded the pilot section opens. This pilot flow causes a pressure imbalance opening the main section and allowing flow to a secondary circuit (sequenced line).

Features

Match ground and honed hardened working parts give long, trouble-free life. Consistent stable operation providing low pressure rise due to increasing flow.

Cartridge construction gives maximum flexibility in mounting. Steel valve bodies available on request.

Sectional view

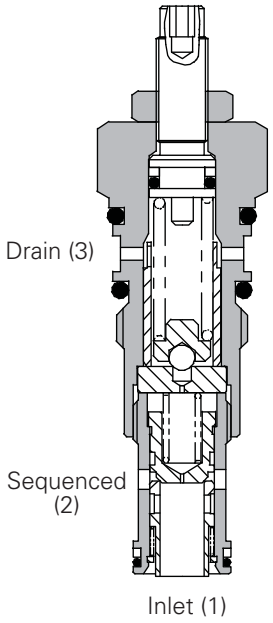

Performance data

Ratings and specifications

Figures based on: Oil Temp = 40° C Viscosity = 32 cSt (150 SUS)		
Rated flow		150 L/min (40 USgpm)
Max setting		350 bar (5000 psi)
Cartridge material		Working parts hardened and ground steel.
		External surfaces electroless nickel plated.
Body material		Standard aluminium (up to 210 bar*).
		Add suffix "377" for steel option.
Mounting position		Unrestricted
Cavity number		A880 (See Section M)
Torque cartridge into cavity		60 Nm (44 lbs ft)
Weight	1PSC100	0.17 kg (0.37 lbs)
	1PSC145	0.78 kg (1.72 lbs)
Seal kit number		SK177 (Nitrile)
		SK177V (Viton®)
Recommended filtration level		BS5540/4 Class 18/13 (25 micron nominal)
Operating temp		-30°C to +90°C (-22°C to 194°F)
Leakage		35 milliliters/min @ 280 bar
Nominal viscosity range		5 to 500 cSt

Viton is a registered trademark of E.I. DuPont

Description

Sequence valves provide ordered sequencing of two or more operations as with clamp and drill circuits. They can also be used as relief valves where the downstream pressure is high or changes during operation. By taking the drain line directly to tank, back pressure effects are negated.

Pressure drop curves

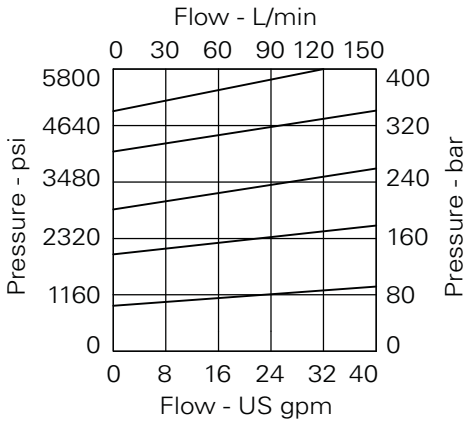

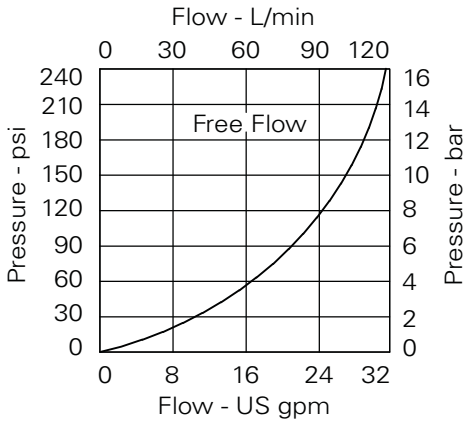

Where measurements are critical request certified drawings. We reserve the right to change specifications without notice.

1PSC100 - Pressure sequence valve

Poppet, pilot operated, normally closed, internal pilot, external drain, reverse flow check
150 L/min (40 USgpm) • 350 bar (5000 psi)

Model code

1PSC* – P 3W – 35 S**

1 2 3 4 5

1 Function

1PSC100 - Cartridge Only
1PSC145 - Cartridge and body

2 Adjustment means

P - Leakproof screw adjustment
R - Handknob adjustment
G - Tamperproof Cap
(See page 4-102 for dimensions)

3 Port sizes

Code	Port size	Housing number - body only	
		Aluminium	Steel
3W	3/8" BSP 1/4" BSP Drain Ports		
4W	1/2" BSP 1/4" BSP Drain Ports	B4821	B4527
6W	3/4" BSP 1/4" BSP Drain Ports	B5466	B4403
6T	3/8" SAE 1/4" SAE Drain Ports	B10793	
8T	1/2" SAE 1/4" SAE Drain Ports	B6584	
12T	3/4" SAE 1/4" SAE Drain Ports	B7883	B11379

4 Pressure range @ 14 L/min

Note: Code based on pressure in bar.
7 - 2–70 bar.
Std setting 35 bar
20 - 10–210 bar
Std setting 100 bar
35 - 50–350 bar
Std setting 280 bar
Std setting made at 14 L/min

5 Seals

S - Nitrile (For use with most industrial hydraulic oils)
SV - Viton (For high temperature and most special fluid applications)

Dimensions

mm (inch)

Cartridge only

Basic Code
1PSC145

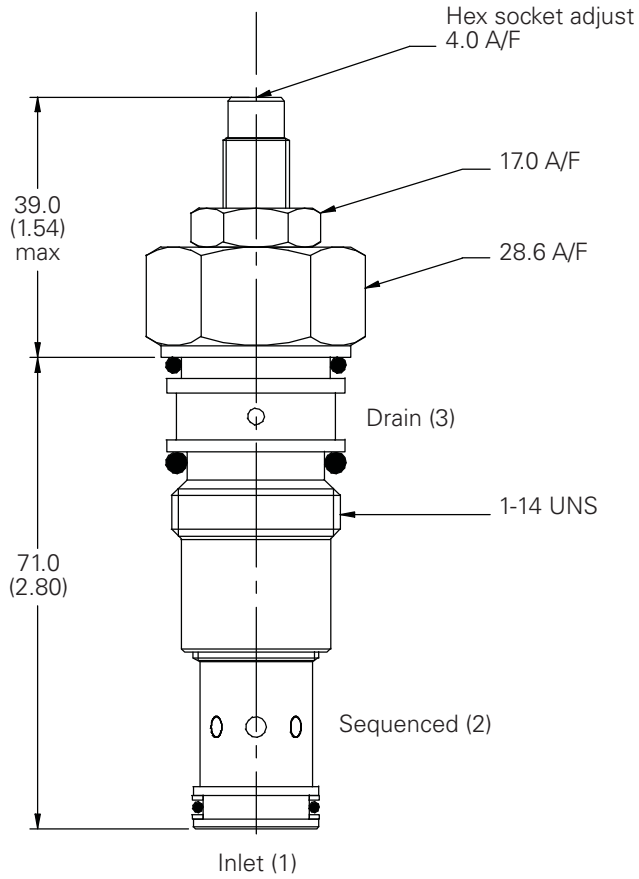

Complete valve

3/8", 1/2", 3/4" Ports
Basic Code
1PSC145

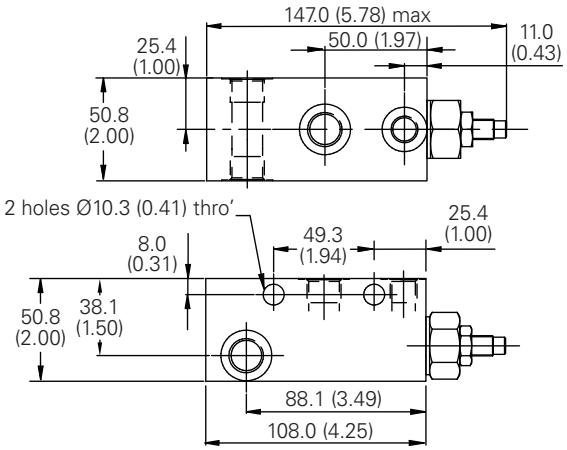

Note: For applications above 210 bar please consult our technical department or use the steel body option.

Where measurements are critical request certified drawings. We reserve the right to change specifications without notice.

1UPS100 - Pressure sequence valve

Spool, pilot operated, normally closed, internal pilot, external drain, unloading
150 L/min (40 USgpm) • 350 bar (5000 psi)

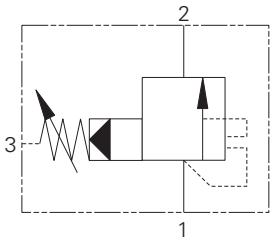

Operation

Inlet pressure acts on the pilot section of the valve. When the valve setting is reached, the pilot section opens and pilot flow causes the spool to move back uncovering the radial vent port.

The main section then opens fully with pilot flow passing through the vent. The valve remains open until flow to the sequenced port ceases and inlet pressure drops to zero.

Features

Hardened steel working parts give long, trouble-free life. Selectively matched honed assemblies give accurate performance.

Sectional view

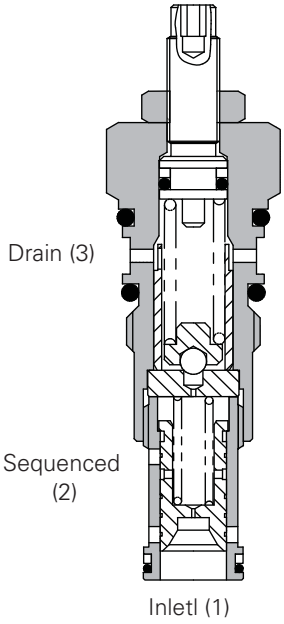

Performance data

Ratings and specifications

Figures based on: Oil Temp 40° C Viscosity = 32 cSt (150 SUS)		
Rated flow		150 L/min (40 USgpm)
Max setting		350 bar (5000 psi)
Cartridge material		Working parts hardened and ground steel.
		External surfaces zinc plated.
Body material		Standard aluminium (up to 210 bar*).
		Add suffix "377" for steel option.
Mounting position		Unrestricted
Cavity number		A880 (See Section M)
Torque cartridge into cavity		60 Nm (44 lbs ft)
Weight	1PSC100	0.17 kg (0.37 lbs)
	1PSC145	0.56 kg (1.23 lbs)
Seal kit number		SK177 (Nitrile)
		SK177V (Viton®)
Recommended filtration level		BS5540/4 Class 18/13 (25 micron nominal)
Operating temp		-30°C to +90°C (-22°C to 194°F)
Leakage		100 milliliters/min nominal
Nominal viscosity range		5 to 500 cSt

Viton is a registered trademark of E.I. DuPont

Description

An off-loading (kick down) sequence valve opens fully to pass flow to a secondary circuit when the valve pressure setting is reached. This allows flow to the secondary circuit with a minimal pressure drop.

Pressure drop curves

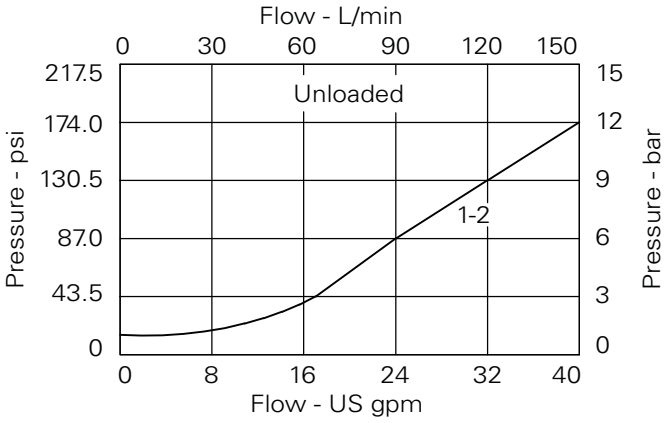

Where measurements are critical request certified drawings. We reserve the right to change specifications without notice.

1UPS100 - Pressure sequence valve

Spool, pilot operated, normally closed, internal pilot, external drain, unloading
150 L/min (40 USgpm) • 350 bar (5000 psi)

Model code

1UPS* – P 3W – 35 S**

1 2 3 4 5

1 Function

1UPS100 - Cartridge Only
1UPS145 - Cartridge in body
1UPS155 - Cartridges in dual body

2 Adjustment means

P - Leakproof screw adjustment
R - Handknob adjustment
G - Tamperproof Cap

(See page 4-102 for dimensions)

3 Port sizes

Code	Port size	Housing number - body only	
		Aluminium	Steel
4W	1/2" BSP 1/4" BSP Drain Ports	B4821	B4527
6W	3/4" BSP 1/4" BSP Drain Ports	B5466	B4403
6T	3/8" SAE 1/4" SAE Drain Ports	B10793	
8T	1/2" SAE 1/4" SAE Drain Ports	B6584	
12T	3/4" SAE 1/4" SAE Drain Ports	B7883	B11379

4 Pressure range @ 14 l/min

Note: Code based on pressure in bar.
20 - 10-210 bar.
Std. setting 100 bar
35 - 30-350 bar.
Std setting 210 bar
Std setting made at 14 L/min

5 Seals

S - Nitrile (For use with most industrial hydraulic oils)
SV - (For high temperature and most special fluid applications)

Dimensions

mm (inch)

Cartridge only

Basic Code
1UPS100

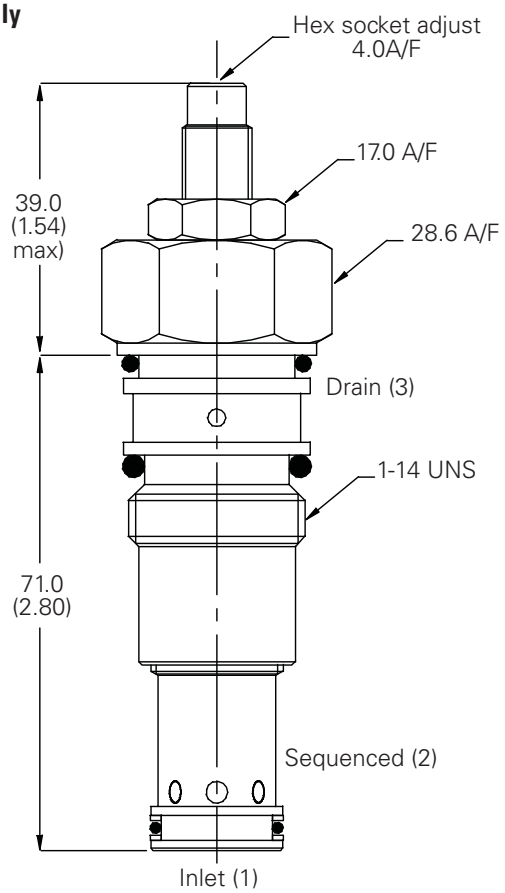

Complete valve

3/8", 1/2", 3/4" Ports
Basic Code
1UPS145

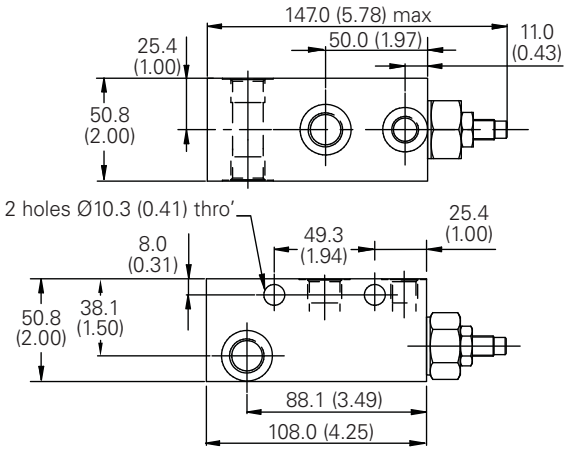

Note: For applications above 210 bar please consult our technical department or use the steel body option.

Where measurements are critical request certified drawings. We reserve the right to change specifications without notice.

PUV3-10 - Pilot unloading valve

Poppet, internal or external pilot operated, normally closed, unloading
4 L/min (1 USgpm) • 210 bar (3000 psi)

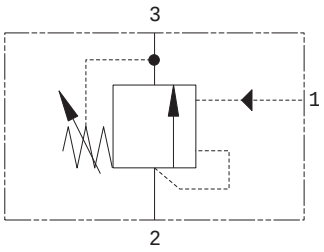

Operation

This valve blocks flow from port 2 to port 3, until either the predetermined spring setting has been reached, or an external pilot has been applied to port 1. At this time flow is then allowed from port 2 to port 3.

The valve will reseat at a percentage of the unloading setting as called out in the model code. This valve can be used alone for low flow applications or used as the pilot stage of a two-stage unloader valve (see application example). The main stage of the unloader is typically a DPS2 logic element.

Features

Hardened poppet and seat. Very low leakage when piloted closed without exerting excessive force on the seat.

Sectional view

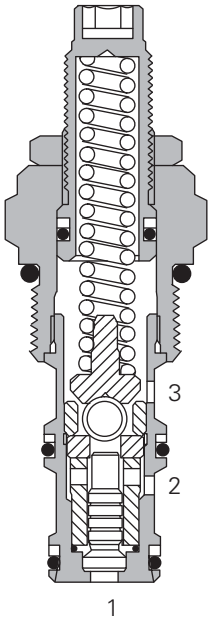

Performance data

Ratings and specifications

Performance data is typical with fluid at 21,8 cSt (105 SUS) and 49° C (120° F)	
Typical application pressure (all ports)	210 bar (3000 psi)
Cartridge fatigue pressure (infinite life)	210 bar (3000 psi)
Rated flow	4 L/min (1 USgpm)
Unloading pressure adjustment range	20-210 bar (300-3000 psi)
Cavity	C-10–3
Standard housing materials	Aluminum
Temperature range	-40° to 120°C (-40° to 248°F)
Fluids	All general purpose hydraulic fluids such as: MIL–H–5606, SAE 10, SAE 20, etc.
Filtration	Cleanliness Code 18/**16/13**
Weight cartridge only	0,15 kg (0.33 lbs)
Seal kits	565812 Buna–N 889611 Viton®

Viton is a registered trademark of E.I. DuPont

Description

The PUV3 is a two-way, normally closed, externally or internally pilot operated screw-in cartridge type pilot unloading valve.

Pressure drop curves

Cartridge only

Piloted full open

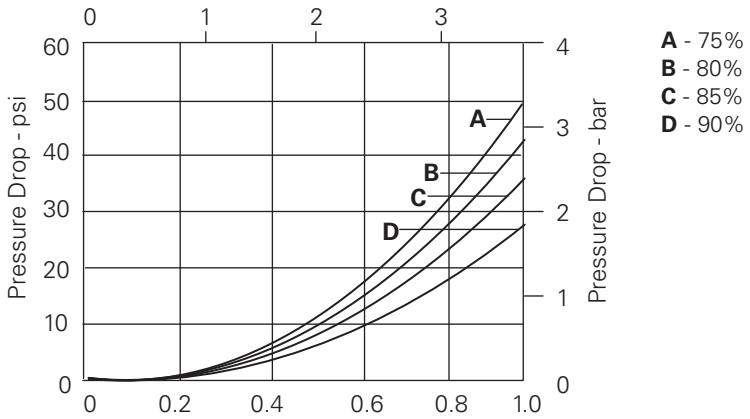

A - 75%
B - 80%
C - 85%
D - 90%

Where measurements are critical request certified drawings. We reserve the right to change specifications without notice.

PUV3-10 - Pilot unloading valve

Poppet, internal or external pilot operated, normally closed, unloading
4 L/min (1 USgpm) • 210 bar (3000 psi)

Model code

PUV3 – 10 (V) – * – ** – **– **/ – 00**

1 2 3 4 5 6 7 8 9

1 Function
PUV3 - Pilot unloading valve

2 Size
10 - 10 size

3 Seal
Blank - Buna-N
V - Viton®

4 Adjustment
C - Cap
S - Screw

5 Port size
0 - Cartridge only

Code	Port size	Housing number	
		Aluminum light duty	Aluminum fatigue rated
6T	SAE 6	566162	–
3B	3/8" BSPP	02–173358	–
6H	SAE 6	–	876704
8H	SAE 8	–	876711
2G	1/4" BSPP	–	876705
3G	3/8" BSPP	–	876714

See section J for housing.

6 Loading (closing) pressure, as percentage of unloading pressure
75 - 75%
80 - 80%
85 - 85%
90 - 90%

7 Pressure range
Note: Code based on pressure in psi.
15 - 20-100 bar. (300-1500 psi)
30 - 100-210 bar. (1500-3000 psi)

8 Unloading pressure setting
Within ranges in 7
Blank - Normal factory setting at approximate mid-range. User requested settings in 3,45 bar (50 psi) steps, Coded as in the following examples:
10 - 70 bar (1000 psi)
9.5 - 65 bar (950 psi)

9 Special features
00 - None
(Only required if valve has special features, omitted if "00.")

Dimensions
mm (inch)

Torque cartridge in aluminum housing to 47-54 Nm (35-40 ft. lbs).

Cartridge only

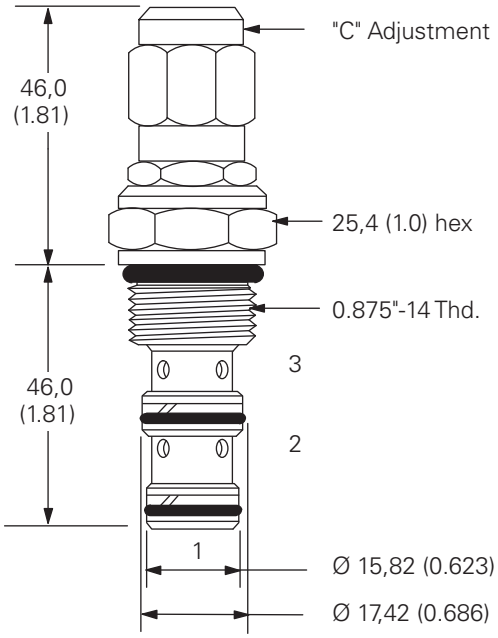

Installation drawing

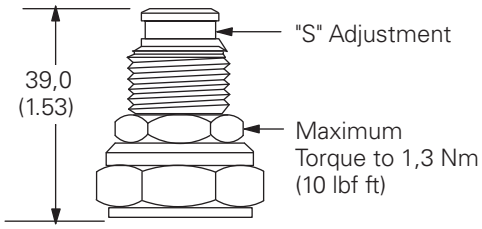

Where measurements are critical request certified drawings. We reserve the right to change specifications without notice.

E

ADV1-16 - Accumulator discharge valve

Poppet, normally open, external pilot
30 L/min (8 USgpm) • 210 bar (3000 psi)

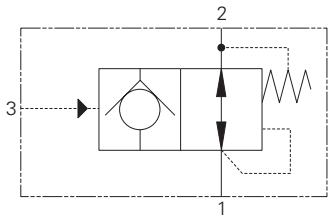

Operation

The valve remains open between port 1 and 2 until sufficient pilot pressure is applied to port 3.

This holds pressure in port 1 until the pilot pressure is released allowing flow to take place from port 1 to 2.

Features

Hardened poppet and seat. Very low leakage when piloted closed without exerting excessive force on the seat.

Sectional view

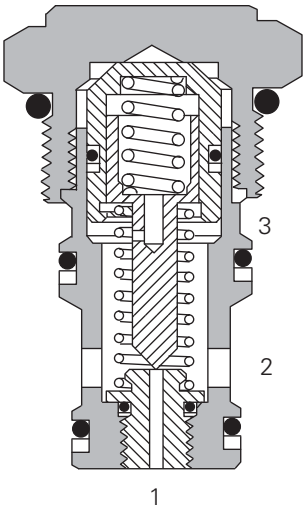

Performance data

Ratings and specifications

Performance data is typical with fluid at 21,8 cSt (105 SUS) and 49° C (120° F)	
Typical application pressure (all ports)	210 bar (3000 psi)
Cartridge fatigue pressure (infinite life)	210 bar (3000 psi)
Rated flow	30 L/min (8 USgpm)
Minimum pilot pressure @ port 3	4 bar (60 psi)
Cavity	C-16–3S
Standard housing materials	Aluminum
Temperature range	-40° to 120°C (-40° to 248°F)
Fluids	All general purpose hydraulic fluids such as: MIL–H–5606, SAE 10, SAE 20, etc.
Filtration	Cleanliness Code 18/**16/13**
Pilot ratio	100:1
Weight cartridge only	0,28 kg (0.62 lbs)
Seal kits	565812 Buna–N 889611 Viton®

Viton is a registered trademark of E.I. DuPont

Description

ADV1-16 is a poppet type pilot to close check valve with a 100 to 1 pilot ratio ideal for accumulator discharge applications.

Pressure drop curves

Cartridge only

Port 3 pilot pressure = 0

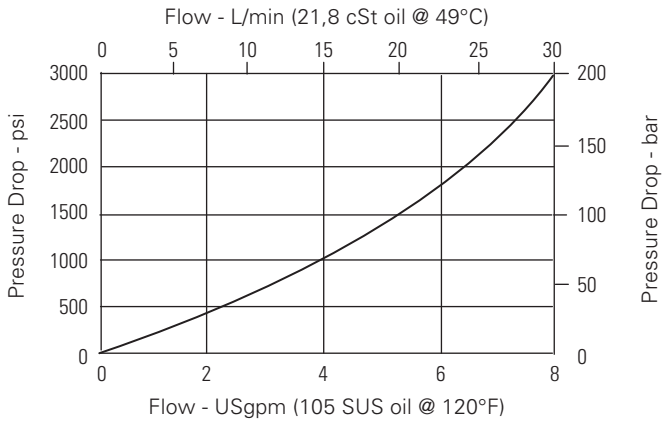

Where measurements are critical request certified drawings. We reserve the right to change specifications without notice.

ADV1-16 - Accumulator discharge valve

Poppet, normally open, external pilot
30 L/min (8 USgpm) • 210 bar (3000 psi)

Model code

ADV1 – 16–(V) * – 100 – 00**

1 2 3 4 5 6

1 Function

ADV1 - Accumulator discharge valve

2 Size

16 - 16 size

3 Seal material

Blank - Buna-N
V - Viton®

4 Port size

0 - Cartridge only

Code	Port size	Housing number	
		Aluminum Light duty	Aluminum Fatigue rated
6B	3/4" BSPP	02–175471	–
12T	SAE 12	566414	–
4G	1/2" BSPP	–	802-160676
6G	3/4" BSPP	–	876726
10H	SAE 10	–	876725
12H	SAE 12	–	876727

See section J for housing.

5 Pilot area ratio

Port 3: Port 1 - 100:1
(Minimum pilot pressure at port 3 - 4 bar (60 psi)

6 Special features

00 - None
(Only required if valve has special features, omitted if "00.")

Dimensions

mm (inch)

Torque cartridge in housing
108-122 Nm (80-90 ft. lbs)

Cartridge only

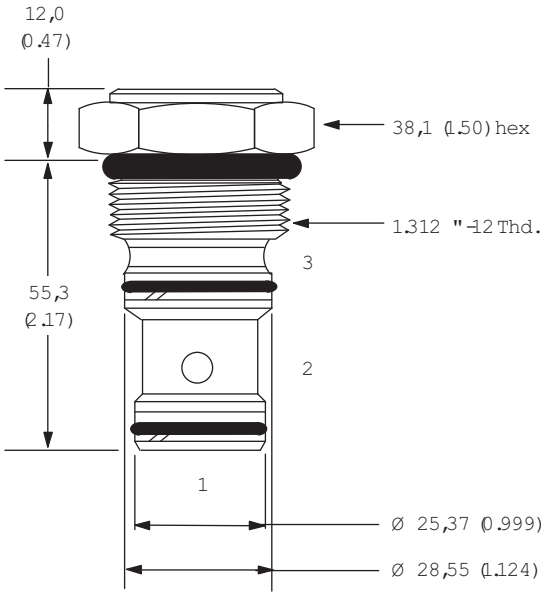

Installation drawing

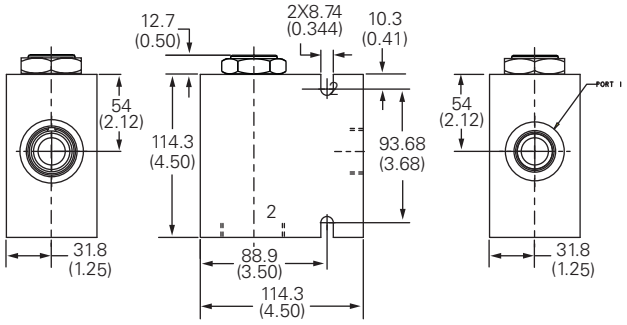

Where measurements are critical request certified drawings. We reserve the right to change specifications without notice.

E

PRV1-10 - Pressure reducing/relieving valve

Spool, direct acting
15 L/min (4 USgpm) • 165 bar (2400 psi)

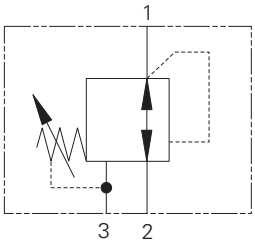

Operation

Normally open, the valve throttles or closes to maintain constant pressure in the regulated line.

As in the other direct acting valves, the spring force holds the valve open.

Features

Hardened steel working parts are individually match ground to assure long life, reliability and high accuracy.

Sectional view

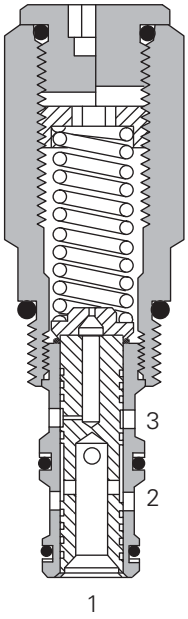

Performance data

Ratings and specifications

Performance data is typical with fluid at 21,8 cSt (105 SUS) and 49° C (120° F)	
Typical application pressure (all ports)	165 bar (2400 psi)
Cartridge fatigue pressure (infinite life)	210 bar (3000 psi)
Rated flow	15 L/min (4 USgpm)
Cavity	C-10–3
Standard housing materials	Aluminum
Temperature range	-40° to 120°C (-40° to 248°F)
Fluids	All general purpose hydraulic fluids such as: MIL–H–5606, SAE 10, SAE 20, etc.
Filtration	Cleanliness Code 18/**16/13**
Weight cartridge only	0,24 kg (0.54 lbs)
Seal kits	565804 Buna–N 889599 Viton®

Viton is a registered trademark of E.I. DuPont

Description

This is a direct acting, screw in cartridge pressure reducing valve designed to provide an adjustable regulated pressure which is lower than supply pressure.. Direct acting models are suited to lower flow applications and regulated pressures to 165 bar (2500 psi). This valve also acts as a relief valve, relieving from regulated line to tank if shock or surge pressures occur in the regulated line.

Pressure override curves

Cartridge only

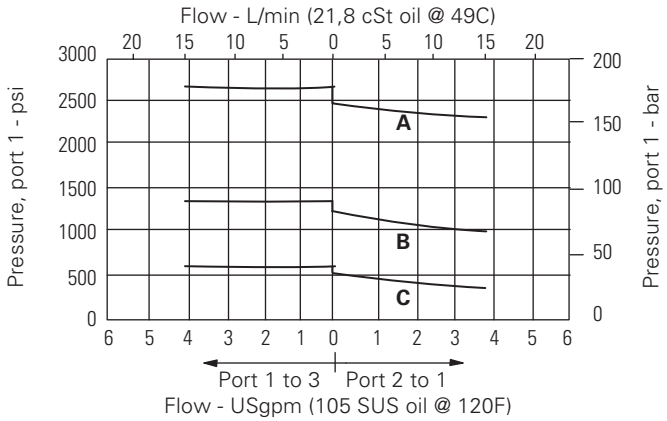

A - 24 spring
B - 12 spring
C - 6 spring

Where measurements are critical request certified drawings. We reserve the right to change specifications without notice.

PRV1-10 - Pressure reducing/relieving valve

Spool, direct acting
15 L/min (4 USgpm) • 165 bar (2400 psi)

Model code

PRV1 – 10 (V) – * – ** – **/ ** – 00

1 2 3 4 5 6 7 8

1 Function
PRV1 - Pressure reducing/ relieving valve

2 Size
10 - 10 size

3 Seal material
Blank - Buna-N
V - Viton®

4 Adjustment
C - Cap
F - Factory set
I - Internal
K - Knob
S - Screw

5 Port size
0 - Cartridge only

Code	Port size	Housing number	
		Aluminum light duty	Aluminum fatigue rated
3B	3/8" BSPP	02–173358	–
6T	SAE 6	566162	–
2G	1/4" BSPP	–	876705
3G	3/8" BSPP	–	876714
6H	SAE 6	–	876704
8H	SAE 8	–	876711

See section J for housing details.

6 Pressure range
Note: Code based on pressure in psi.
2 - 3,5-14 bar (50-200 psi)
6 - 7-40 bar (100-600 psi)
12 - 14-85 bar (200-1200 psi)
24 - 30-165 bar (400-2400 psi)

7 Factory set reduced pressure
Within ranges in 6
Blank - Normal factory setting at approximate mid-range. User requested settings in 3,45 bar (50 psi) steps, Coded as in the following examples:
10 - 70 bar (1000 psi)
10.5 - 72,4 bar (1050 psi)

8 Special features
00 - None
(Only required if valve has special features, omitted if "00.")
SS - 316 Stainless steel external components

Dimensions
mm (inch)

Cartridge only

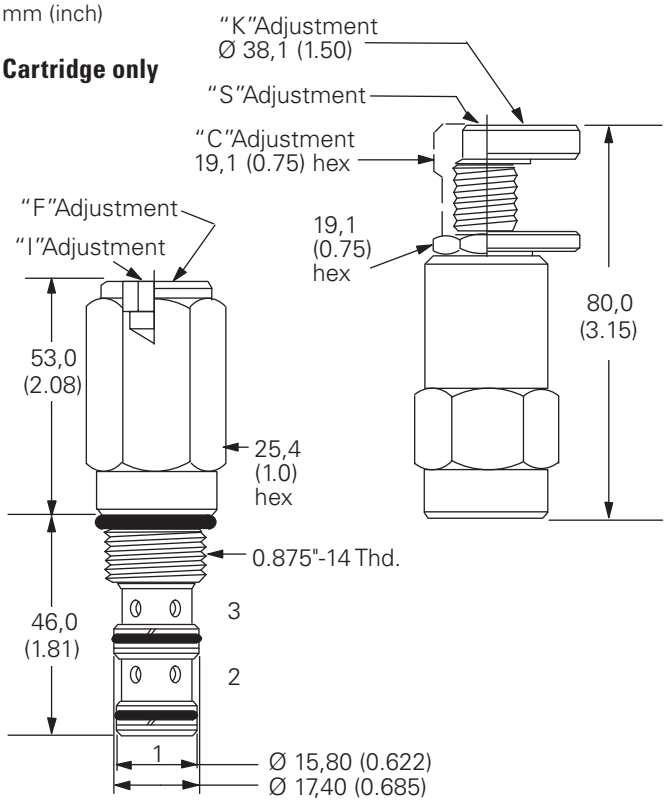

Torque cartridge in aluminum housing 47-54 Nm (35-40 ft. lbs)

Installation drawing

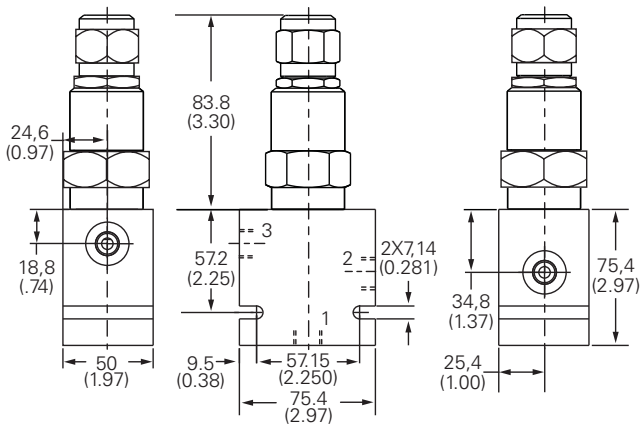

Where measurements are critical request certified drawings. We reserve the right to change specifications without notice.

E

PRV2-10 - Pressure reducing/relieving valve

Spool, pilot operated
38 L/min (10 USgpm) • 240 bar (3500 psi)

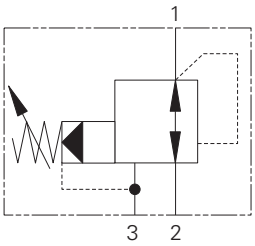

Operation

This valve is normally open allowing inlet oil to pass to the regulated line until the outlet (regulated) pressure exceeds the setting of the pilot section. When this setting is achieved a pilot flow occurs, causing a pressure imbalance across the main spool, which then moves throttling the inlet flow and preventing any further pressure rise in the regulated line. If any external force causes the regulated pressure to rise more than 5-10% above the setting, the main spool moves back further, opening the regulated port to the tank line, thus working as a relief valve.

Features

Cartridge construction with hardened, ground and honed working parts giving smooth, stable operation over all pressure ranges.

Sectional view

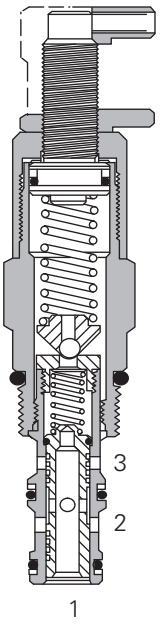

Performance data

Ratings and specifications

Performance data is typical with fluid at 21,8 cSt (105 SUS) and 49° C (120° F)	
Typical application pressure (all ports)	240 bar (3500 psi)
Cartridge fatigue pressure (infinite life)	210 bar (3000 psi)
Rated flow	38 L/min (10 USgpm)
Cavity	C-10–3
Standard housing materials	Aluminum or steel
Temperature range	-40° to 120°C (-40° to 248°F)
Fluids	All general purpose hydraulic fluids such as: MIL–H–5606, SAE 10, SAE 20, etc.
Filtration	Cleanliness Code 18/**16/13**
Weight cartridge only	0,24 kg (0.54 lbs)
Seal kits	565804 Buna–N 889599 Viton®

Viton is a registered trademark of E.I. DuPont

Description

This is a pilot operated screw in cartridge pressure reducing / relieving valve. The valve maintains a constant outlet pressure in hydraulic sub-systems regardless of fluctuations in the primary system. In addition to this it will act as a relief valve if the pressure in the sub-system rises higher than the setting of the valve directing excess fluid to tank.

Pressure override curves

Cartridge only

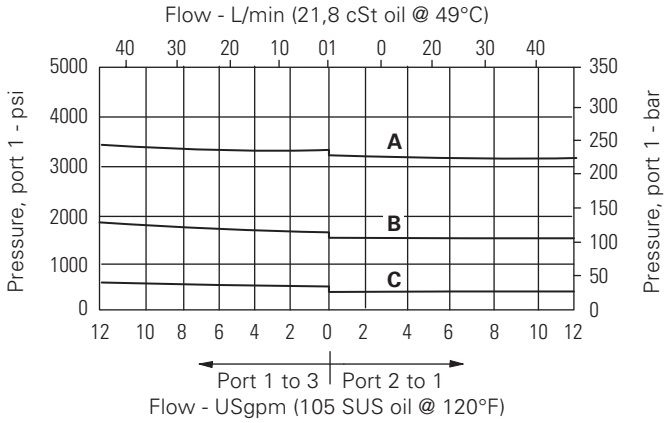

A - 35 spring
B - 20 spring
C - 3 spring

Where measurements are critical request certified drawings. We reserve the right to change specifications without notice.

PRV2-10 - Pressure reducing/relieving valve

Spool, pilot operated
38 L/min (10 USgpm) • 240 bar (3500 psi)

Model code

PRV2 – 10 (V) – * – (S) – ** – **/ ** – 00

1 2 3 4 5 6 7 8 9

1 Function
PRV2 - Pressure reducing/ relieving valve

2 Size
10 - 10 size

3 Seal material
Blank - Buna-N
V - Viton®

4 Adjustment
C - Cap
F - Factory set
I - Internal
K - Knob
S - Screw

5 Valve housing material
Blank - Aluminum
S - Steel

6 Port size
0 - Cartridge only

Code	Port size	Housing number		
		Aluminum light duty	Aluminum fatigue rated	Steel fatigue rated
3B	3/8" BSPP	02–173358	–	–
2G	1/4" BSPP	–	876705	02–175127
3G	3/8" BSPP	–	876714	02–175128
6H	SAE 6	–	876704	–
8H	SAE 8	–	876711	–
6T	SAE 6	566162	–	02–175124
8T	SAE 8	–	–	02–175125

See section J for housing.

7 Cracking pressure range
Note: Code based on pressure in psi.
3 - 3,5-20 bar (50-300 psi)
20 - 7-140 bar (100-2000 psi)
35 - 17-240 bar (250-3500 psi)

8 Factory set reduced pressure
Within ranges in 7

Blank - Normal factory setting at approximate mid-range. User requested settings in 3,45 bar (50 psi) steps, Coded as in the following examples:

10 - 70 bar (1000 psi)
10.5 - 72,4 bar (1050 psi)

9 Special features
00 - None
(Only required if valve has special features, omitted if "00.")
SS - 316 Stainless Steel external components

Dimensions
mm (inch)
Cartridge only

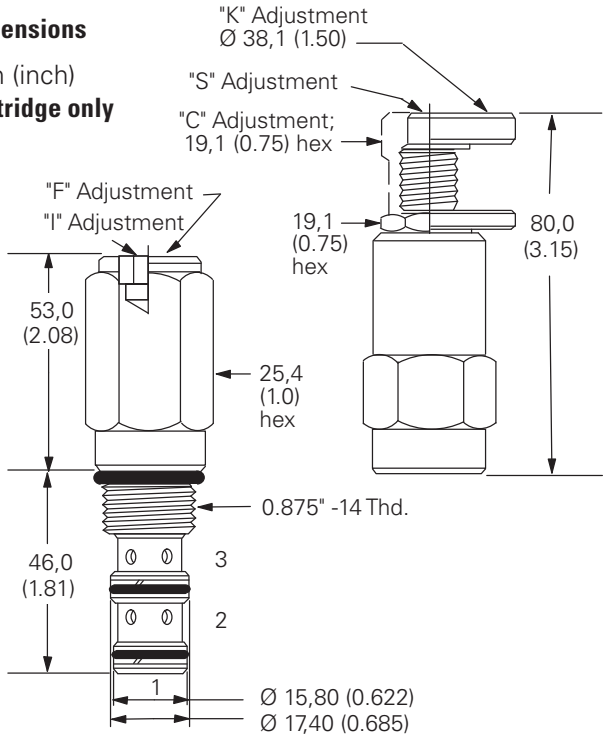

Installation drawing (Steel)

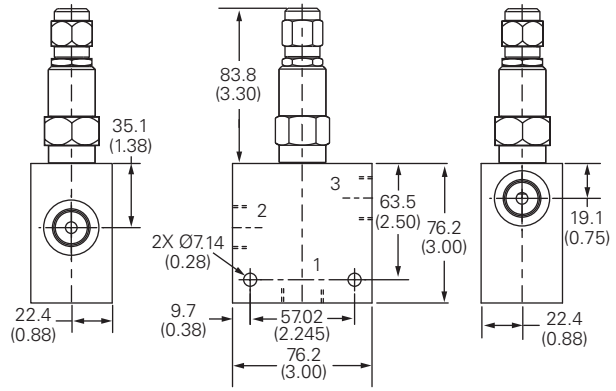

Torque cartridge in housing
A - 47-54 Nm (35-40 ft. lbs)
S - 68-75 Nm (50-55 ft. lbs)

⚠ Warning
Aluminum housings can be used for pressures up to 210 bar (3000 psi). Steel housings must be used for operating pressures above 210 bar (3000 psi).

Where measurements are critical request certified drawings. We reserve the right to change specifications without notice.

E

PRV12-10 - Pressure reduced/relieving valve

Spool, pilot operated
45 L/min (12 USgpm) • 350 bar (5000 psi)

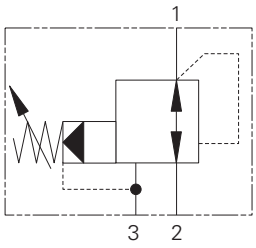

Operation

This valve is normally open allowing inlet oil to pass to the regulated line until the outlet (regulated) pressure exceeds the setting of the pilot section. When this setting is achieved a pilot flow occurs, causing a pressure imbalance across the main spool, which then moves throttling the inlet flow and preventing any further pressure rise in the regulated line. If any external force causes the regulated pressure to rise more than 5-10% above the setting, the main spool moves back further, opening the regulated port to the tank line, thus working as a relief valve.

Features

Cartridge construction with hardened, ground and honed working parts giving smooth, stable operation over all pressure ranges.

Sectional view

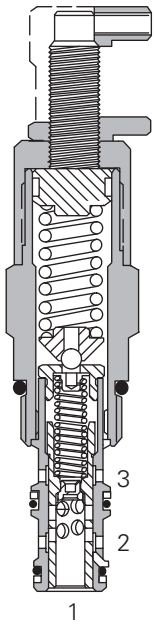

Performance data

Ratings and specifications

Performance data is typical with fluid at 21,8 cSt (105 SUS) and 49° C (120° F)	
Typical application pressure (all ports)	350 bar (5000 psi)
Cartridge fatigue pressure (infinite life)	350 bar (5000 psi)
Rated flow	45 L/min (12 USgpm)
Cracking pressure	15 – 8,5–100 bar (125–1500 psi) 30 – 17,0–210 bar (250–3000 psi) 50 – 38– 350 bar (550–5000 psi)
Cavity	C-10-3
Standard housing materials	Aluminum or steel
Temperature range	-40° to 120°C (-40° to 248°F)
Fluids	All general purpose hydraulic fluids such as: MIL–H–5606, SAE 10, SAE 20, etc.
Filtration	Cleanliness Code 18/**16/13**
Weight cartridge only	0,24 kg (0.54 lbs)
Seal kits	565804 Buna–N 889599 Viton®

Viton is a registered trademark of E.I. DuPont

Description

This is a pilot operated screw in cartridge pressure reducing / relieving valve. The valve maintains a constant outlet pressure in hydraulic sub-systems regardless of fluctuations in the primary system. In addition to this it will act as a relief valve if the pressure in the sub-system rises higher than the setting of the valve directing excess fluid to tank.

Reduced pressure characteristics

Cartridge only
(max. setting)

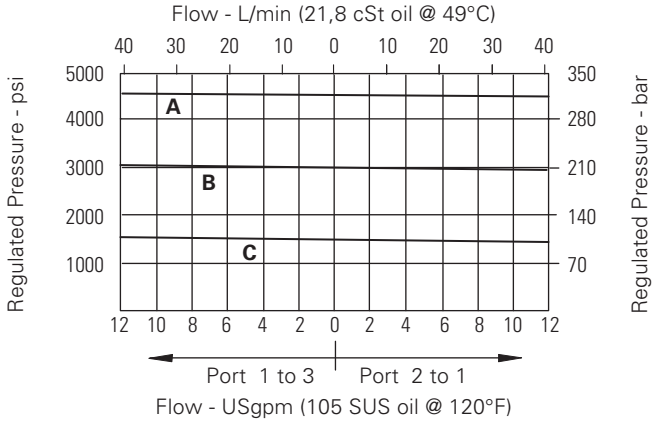

A - 50 spring
B - 33 spring
C - 15 spring

Where measurements are critical request certified drawings. We reserve the right to change specifications without notice.

PRV12-10 - Pressure reduced/relieving valve

Spool, pilot operated
45 L/min (12 USgpm) • 350 bar (5000 psi)

Model code

PRV12 – 10 (V) – * – (S) – ** – **/ ** – 00

1 2 3 4 5 6 7 8 9

1 Function
PRV12 - Pressure reducing/ relieving valve

2 Size
10 - 10 size

3 Seal material
Blank - Buna-N
V - Viton

4 Adjustment
C - Cap
F - Factory Set
I - Internal
K - Knob
S - Screw

5 Valve housing material
Blank - Aluminum
S - Steel

6 Port size
0 - Cartridge only

Code	Port size	Housing number		
		Aluminum light duty	Aluminum fatigue rated	Steel fatigue rated
3B	3/8" BSPP	02–173358	–	–
2G	1/4" BSPP	–	876705	02–175127
3G	3/8" BSPP	–	876714	02–175128
6H	SAE 6	–	876704	–
8H	SAE 8	–	876711	–
6T	SAE 6	566162	–	02–175124
8T	SAE 8	–	–	02–175125

See section J for housing.

7 Cracking pressure range
Note: Code based on pressure in psi.
15 - 8,5-100 bar (125-1500 psi)
30 - 17,0-210 bar (250-3000 psi)
50 - 38-350 bar (550-5000 psi)

8 Factory set reduced pressure
Within ranges in 7
Blank - Normal factory setting at approximate mid-range. User requested settings in 3,45 bar (50 psi) steps, Coded as in the following examples:
10 - 70 bar (1000 psi)
10.5 - 72,4 bar (1050 psi)

9 Special features
00 - None
(Only required if valve has special features, omitted if "00.")

Dimensions
mm (inch)

Cartridge only

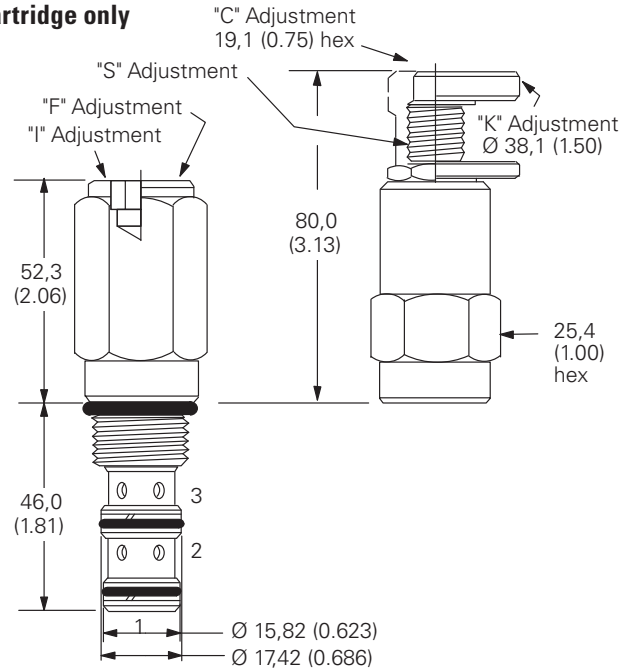

Installation drawing (Steel)

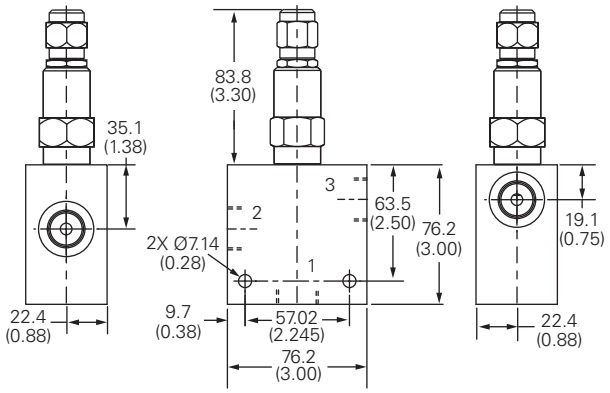

Torque cartridge in housing
A - 47-54 Nm (35-40 ft. lbs)
S - 68-75 Nm (50-55 ft. lbs)

⚠ Warning
Aluminum housings can be used for pressures up to 210 bar (3000 psi). Steel housings must be used for operating pressures above 210 bar (3000 psi).

Where measurements are critical request certified drawings. We reserve the right to change specifications without notice.

PRV12-12 - Pressure reducing/relieving valve

Spool, pilot operated
114 L/min (30 USgpm) • 350 bar (5000 psi)

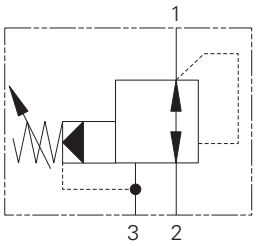

Operation

This valve is normally open allowing inlet oil to pass to the regulated line until the outlet (regulated) pressure exceeds the setting of the pilot section. When this setting is achieved a pilot flow occurs, causing a pressure imbalance across the main spool, which then moves throttling the inlet flow and preventing any further pressure rise in the regulated line. If any external force causes the regulated pressure to rise more than 5-10% above the setting, the main spool moves back further, opening the regulated port to the tank line, thus working as a relief valve.

Features

Cartridge construction with hardened, ground and honed working parts giving smooth, stable operation over all pressure ranges.

Sectional view

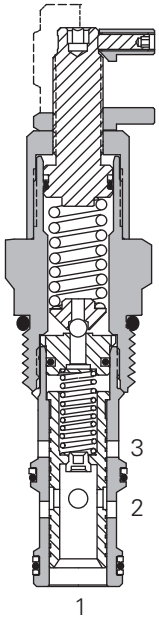

Description

This is a pilot operated screw in cartridge pressure reducing / relieving valve. The valve maintains a constant outlet pressure in hydraulic sub-systems regardless of fluctuations in the primary system. In addition to this it will act as a relief valve if the pressure in the sub-system rises higher than the setting of the valve directing excess fluid to tank.

Performance data

Ratings and specifications

Performance data is typical with fluid at 21,8 cSt (105 SUS) and 49° C (120° F)	
Typical application pressure	350 bar (5000 psi) Port 2 to 1 and 1 to 3 @ 57 L/min (15 USgpm) 210 bar (3000 psi) Port 2 to 1 @ 114 L/min (30 USgpm)
Cartridge fatigue pressure (infinite life)	350 bar (5000 psi)
Rated flow	114 L/min (30 USgpm)
Internal leakage	1,0 L/min (0.25 USgpm)
Cavity	C-12–3
Standard housing materials	Aluminum or steel
Temperature range	-40° to 120°C (-40° to 248°F)
Fluids	All general purpose hydraulic fluids such as: MIL–H–5606, SAE 10, SAE 20, etc.
Filtration	Cleanliness Code 18/**16/13**
Weight cartridge only	0,4 kg (0.89 lbs)
Seal kits	02–165872 Buna–N 02–165886 Viton®

Viton is a registered trademark of E.I. DuPont

Pressure drop curves

Cartridge only

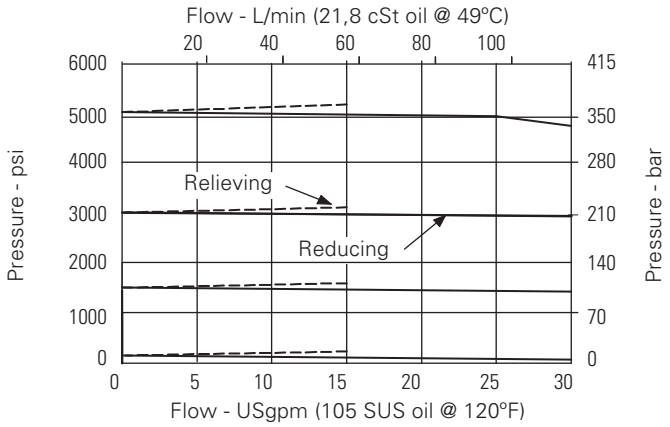

Where measurements are critical request certified drawings. We reserve the right to change specifications without notice.

PRV12-12 - Pressure reducing/relieving valve

Spool, pilot operated
114 L/min (30 USgpm) • 350 bar (5000 psi)

Model code

PRV12 – 12 (V) – * – (S) – * – **/ ** – 00**

1 2 3 4 5 6 7 8 9

1 Function

PRV12 - Pressure reducing/ relieving valve

2 Size

12 - 12 size

3 Seal material

Blank - Buna-N
V - Viton®

4 Adjustment

S - Screw
C - Cap
K - Knob

5 Valve housing material

Omit for cartridge only

S - Steel
A - Aluminum

6 Port size

0 - Cartridge only

Code	Port size	Housing number	
		Aluminum fatigue rated	Steel fatigue rated
10T	SAE 10	02–160642	02–161070
12T	SAE 12	02–160646	02–169816
4G	1/2" BSPP	02–161817	02–169815
6G	3/4" BSPP	02–161816	02–169814

See section J for housing.

7 Cracking pressure range

Note: Code based on pressure in psi.
15 - 10-100 bar (150-1500 psi)
30 - 17- 210 bar (250-3000 psi)
50 - 24-350 bar (350-5000 psi)

8 Factory set reduced pressure

Within ranges in **7**
Blank - Normal factory setting at approximate mid-range. User requested settings in 3,45 bar (50 psi) steps, Coded as in the following examples:
10 - 70 bar (1000 psi)
10.5 - 72,4 bar (1050 psi)

9 Special features

00 - None
(Only required if valve has special features, omitted if "00.")

Torque cartridge in housing
A - 81-95 Nm (60-70 ft. lbs)
S - 102-115 Nm (75-85 ft. lbs)

Dimensions

mm (inch)

Cartridge only

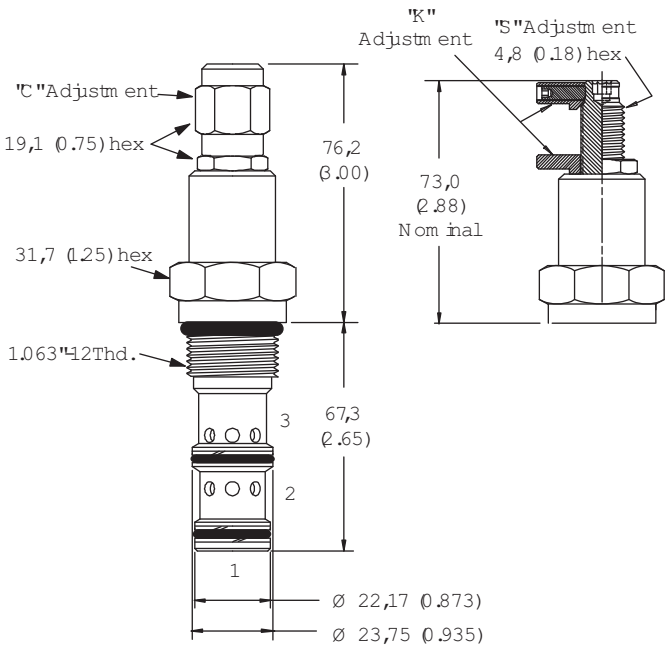

Installation drawing (Steel)

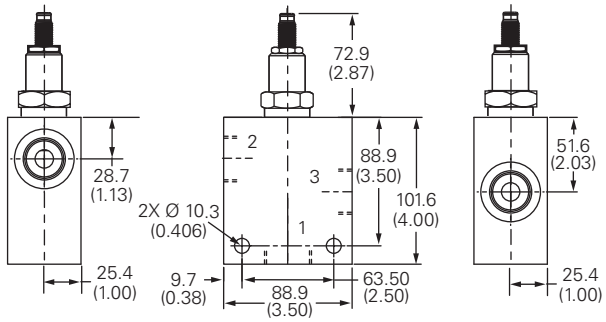

⚠ Warning

Aluminum housings can be used for pressures up to 210 bar (3000 psi). Steel housings must be used for operating pressures above 210 bar (3000 psi).

Where measurements are critical request certified drawings. We reserve the right to change specifications without notice.

1PA100 - Pressure reducing valve

Spool, pilot operated
100 L/min (26 USgpm) • 10 bar (150 psi) to 350 bar (5000 psi)

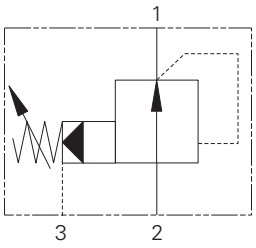

Operation

This valve is normally open, allowing oil from the inlet to pass through to the regulated port of the cartridge.

When the regulated pressure reaches the valve setting, the pilot section opens causing a pressure imbalance across the main spool which moves, throttling the inlet flow, preventing any further pressure rise in the regulated line.

Features

Internal parts hardened, match ground and honed to give long, trouble-free life. Pilot style design allows for high flows and accurate performance.

Sectional view

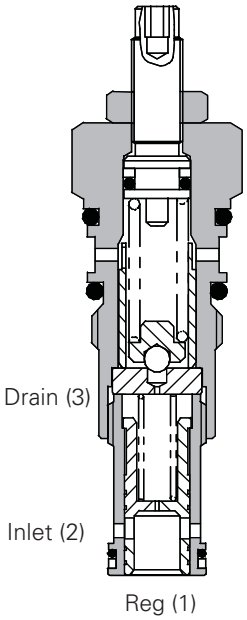

Performance data

Ratings and specifications

Figures based on: Oil Temp = 40° C Viscosity = 32 cSt (150 SUS)		
Rated flow		100 L/min (26 USgpm)
Pressure range		10 to 350 bar (150 to 5000 psi)
Max differential		210 bar (3000 psi) between 1 and 2
Cartridge material		Working parts hardened and ground steel. External surfaces zinc plated.
Body material		Standard aluminium (up to 210 bar*). Add suffix "377" for steel option.
Mounting position		Unrestricted
Cavity number		A880 (See Section M)
Torque cartridge into cavity		60 Nm (44 lbs ft)
Weight	1PA100	0.17 kg (0.37 lbs)
	1PA150	0.60 kg (1.32 lbs)
Seal kit number		SK177 (Nitrile) SK177V (Viton®)
Recommended filtration level		BS5540/4 Class 18/13 (25 micron nominal)
Operating temp		-30°C to +90°C (-22°C to 194°F)
Pilot flow		500 milliliters/min @ standard setting
Nominal viscosity range		5 to 500 cSt

Viton is a registered trademark of E.I. DuPont

Description

This is a pilot operated pressure reducing valve designed to maintain a constant downstream pressure lower than the inlet pressure. Ideal for use in two pressure systems or to protect low pressure actuators such as brake cylinders.

Pressure drop curve

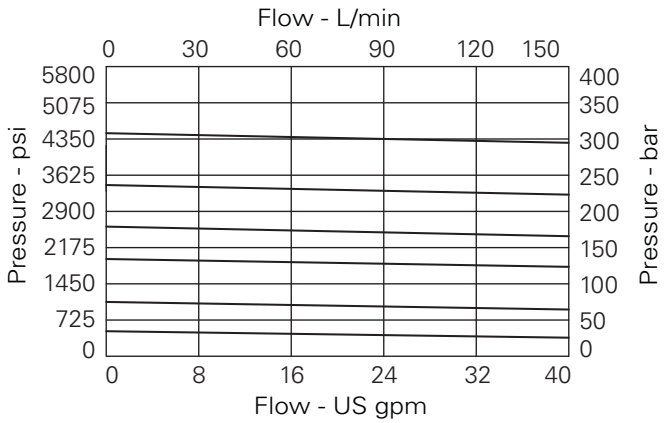

Where measurements are critical request certified drawings. We reserve the right to change specifications without notice.

1PA100 - Pressure reducing valve

Spool, pilot operated
100 L/min (26 USgpm) • 10 bar (150 psi) to 350 bar (5000 psi)

Model code

1PA* – P 4W – 35 S**

1 2 3 4 5

1 Basic code

1PA100 - Cartridge Only
1PA150 - Cartridge and Body

2 Adjustment means

P - Leakproof Screw Adjustment
R - Handknob Adjustment
G - Tamperproof Cap (See page E-7 for dimensions)

3 Port sizes - bodied valves only

Code	Port size	Housing number	
		Aluminium single	Steel single
4W	1/2" BSP. 1/4" BSP Drain Port	B4821	B4527
6W	3/4" BSP. 1/4" BSP Drain Port	B5466	B4403
8T	1/2" SAE. 1/4" SAE Drain Port	B6584	
12T	3/4" SAE. 1/4" SAE Drain Port	B7883	B11379

4 Pressure range @ zero flow

Note: Code based on pressure in bar.
7 - 10–70 bar
Std setting 20 bar
20 - 15–210 bar
Std setting 100 bar
35 -30–350 bar
Std setting 280 bar
Std setting made at zero flow (dead head)

5 Seals

S - Nitrile (For use with most industrial hydraulic oils)
SV - Viton® (For high temperature and most special fluid applications)

Dimensions

mm (inch)

Cartridge only

Basic Code
1PA100

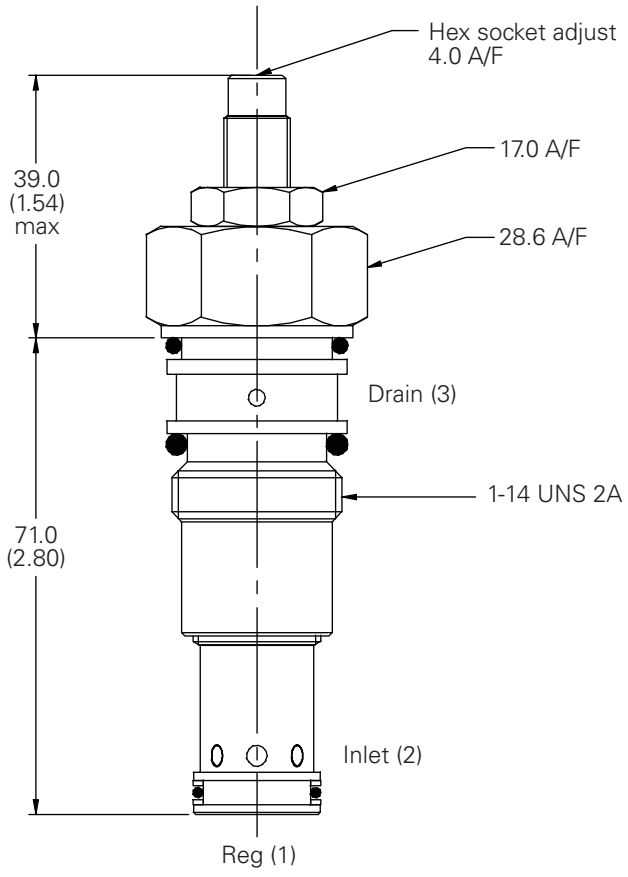

Complete valve

1/2", 3/4" Ports
Basic Code
1PA150

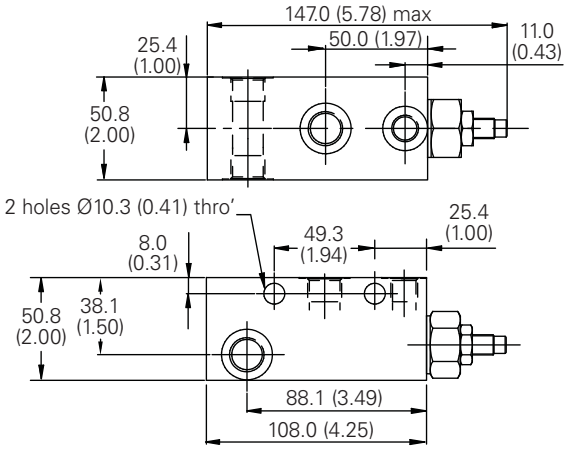

Note: Tightening torque of "F" adjuster locknut - 20 to 25 Nm

Note: For applications above 210 please consult our technical department or use the steel body option.

Where measurements are critical request certified drawings. We reserve the right to change specifications without notice.

E

PRV2-16 - Pressure reducing/relieving valve

Spool, pilot operated
151 L/min (40 USgpm) • 350 bar (5000 psi)

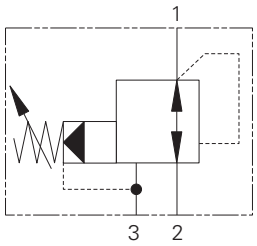

Operation

This valve is normally open allowing inlet oil to pass to the regulated line until the outlet (regulated) pressure exceeds the setting of the pilot section. When this setting is achieved a pilot flow occurs, causing a pressure imbalance across the main spool, which then moves throttling the inlet flow and preventing any further pressure rise in the regulated line. If any external force causes the regulated pressure to rise more than 5-10% above the setting, the main spool moves back further, opening the regulated port to the tank line, thus working as a relief valve.

Features

Cartridge construction with hardened, ground and honed working parts giving smooth, stable operation over all pressure ranges.

Sectional view

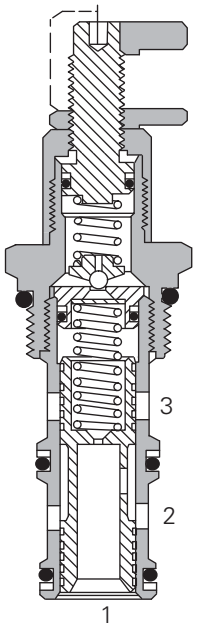

Performance data

Ratings and specifications

Performance data is typical with fluid at 21,8 cSt (105 SUS) and 49° C (120° F)	
Typical application pressure (all ports)	350 bar (5000 psi)
Cartridge fatigue pressure (infinite life)	350 bar (5000 psi)
Rated flow	151 L/min (40 USgpm)
Cavity	C-16–3
Standard housing materials	Aluminum or steel
Temperature range	-40° to 120°C (-40° to 248°F)
Fluids	All general purpose hydraulic fluids such as: MIL–H–5606, SAE 10, SAE 20, etc.
Filtration	Cleanliness Code 18/**16/13**
Weight cartridge only	0,40 kg. (0.89 lbs.)
Seal kits	565811 Buna–N 889610 Viton®

Viton is a registered trademark of E.I. DuPont

Description

This is a pilot operated screw in cartridge pressure reducing / relieving valve. The valve maintains a constant outlet pressure in hydraulic sub-systems regardless of fluctuations in the primary system. In addition to this it will act as a relief valve if the pressure in the sub-system rises higher than the setting of the valve directing excess fluid to tank.

Pressure drop curve

Cartridge only

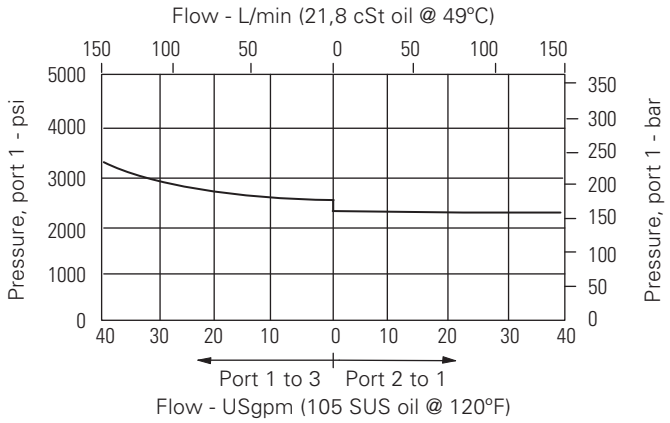

Where measurements are critical request certified drawings. We reserve the right to change specifications without notice.

PRV2-16 - Pressure reducing/relieving valve

Spool, pilot operated
151 L/min (40 USgpm) • 350 bar (5000 psi)

Model code

PRV2 – 16 (V) – * – (S) – * – **/ ** – 00**

1 2 3 4 5 6 7 8 9

1 Function

PRV2 - Pressure reducing/ relieving valve

2 Size

16 - 16 size

3 Seal material

Blank - Buna-N
V - Viton®

4 Adjustment

C - Cap
K - Knob
S - Screw

5 Valve housing material

S - Steel
A - Aluminum

6 Port size

0 - Cartridge only

Code	Port size	Housing number		
		Aluminum light duty	Aluminum fatigue rated	Steel fatigue rated
6B	3/4" BSPP	02–175465	–	–
4G	1/2" BSPP	–	876720	02–175131
6G	3/4" BSPP	–	876722	02–175132
10H	SAE 10	–	876721	–
12H	SAE 12	–	876723	–
10T	SAE 10	–	–	02–175129
12T	SAE 12	566152	–	02–175130

See section J for housing.

7 Cracking pressure range

Note: Code based on pressure in psi.
30 - 34-210 bar (500-3000 psi)
60 - 70-415 bar (1000-6000 psi)

8 Factory set reduced pressure

Within ranges in **7**

Blank - Normal factory setting at approximate mid-range. User requested settings in 3,45 bar (50 psi) steps, Coded as in the following examples:
10 - 70 bar (1000 psi)
10.5 - 72,4 bar (1050 psi)

9 Special features

00 - None
(Only required if valve has special features, omitted if "00.")

Dimensions

mm (inch)

Torque cartridge in housing
A - 108-122 Nm (80-90 ft. lbs)
S - 136-149 Nm (100-110 ft. bs)

Cartridge only

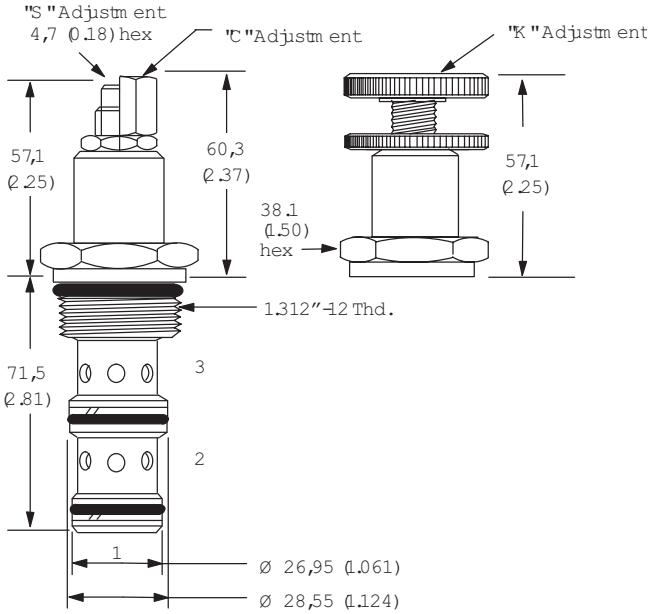

Installation drawing (Steel)

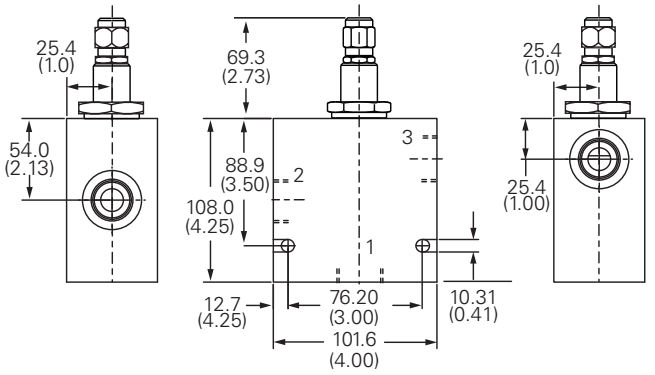

⚠ Warning

Aluminum housings can be used for pressures up to 210 bar (3000 psi). Steel housings must be used for operating pressures above 210 bar (3000 psi).

Where measurements are critical request certified drawings. We reserve the right to change specifications without notice.

E

1PA200 - Pressure reducing valve

Spool, pilot operated
200 L/min (52 USgpm) • 350 bar (5000 psi)

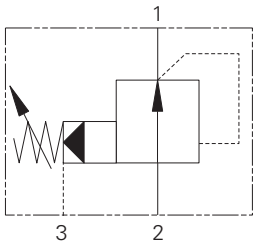

Operation

This valve is normally open, allowing oil from the inlet to pass through to the regulated port of the cartridge.

When the regulated pressure reaches the valve setting, the pilot section opens causing a pressure imbalance across the main spool which moves, throttling the inlet flow, preventing any further pressure rise in the regulated line.

Features

Internal parts hardened, match ground and honed to give long, trouble-free life. Pilot style design allows for high flows and accurate performance.

Sectional view

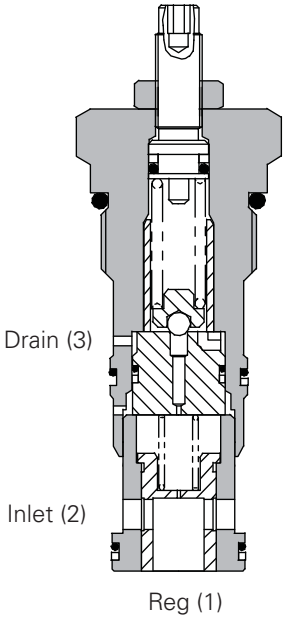

Performance data

Ratings and specifications

Figures based on: Oil Temp = 40° C Viscosity = 32 cSt (150 SUS)		
Rated flow		200 L/min (52 USgpm)
Max setting		Inlet 350 bar (5000 psi) Reg 30–350 bar (435–5000 psi)
Max Differential		210 bar (3000 psi) between 1 and 2
Cartridge material		Working parts hardened and ground steel. External surfaces zinc plated.
Body material		Standard aluminium (up to 210 bar*). Add suffix "377" for steel option.
Mounting position		Unrestricted
Cavity number		A16102 (See Section 17)
Torque cartridge into cavity		100 Nm (76 lbs ft)
Weight	1PA200	0.72 kg (1.59 lbs)
	1PA250	1.06 kg (2.34 lbs)
Seal kit number		SK173 (Nitrile) SK173V (Viton®)
Recommended filtration level		BS5540/4 Class 18/13 (25 micron nominal)
Operating temp		-30°C to +90°C (-22°C to 194°F)
Pilot Flow		550 milliliters/min @ standard setting
Nominal viscosity range		5 to 500 cSt

Viton is a registered trademark of E.I. DuPont

Description

This is a pilot operated pressure reducing valve designed to maintain a constant downstream pressure lower than the inlet pressure. Ideal for use in two pressure systems or to protect low pressure actuators such as brake cylinders.

Pressure drop curve

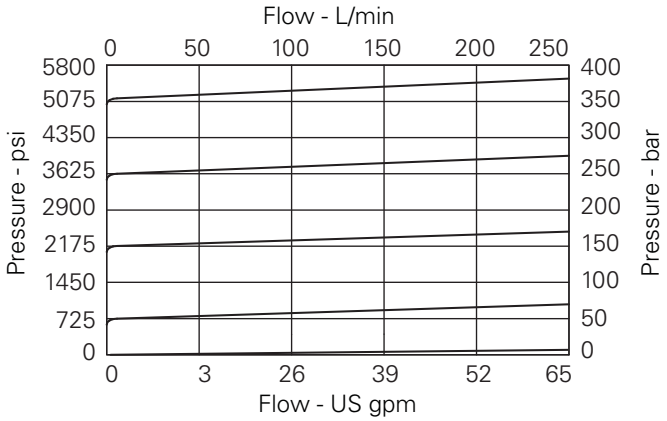

Where measurements are critical request certified drawings. We reserve the right to change specifications without notice.

1PA200 - Pressure reducing valve

Spool, pilot operated
200 L/min (52 USgpm) • 350 bar (5000 psi)

Model code

1PA* – P 8W – 35 S**

1 2 3 4 5

1 Basic code

1PA200 - Cartridge Only
1PA250 - Cartridge and Body

2 Adjustment means

P - Leakproof Screw Adjustment
R - Handknob Adjustment
G - Tamperproof Cap (See page E-7 for dimensions)

3 Port sizes - bodied valves only

Code	Port size	Housing number	
		Aluminum single	Steel single
8W	1" BSP 1/4" BSP Drain Port	B3496	B3497
12T	3/4" SAE 1/4" BSP Drain Port	B10786	
16T	1" SAE 1/4" SAE Drain Port	B6807	B11555

4 Pressure range @ zero flow

Note: Code based on pressure in bar.

20 - 10–210 bar
Std setting 100 bar

35 - 30–350 bar
Std setting 280 bar

Std setting made at zero flow (dead head)

5 Seals

S - Nitrile (For use with most industrial hydraulic oils)

SV - Viton® (For high temperature and most special fluid applications)

Dimensions

mm (inch)

Cartridge only

Basic Code
1PA200

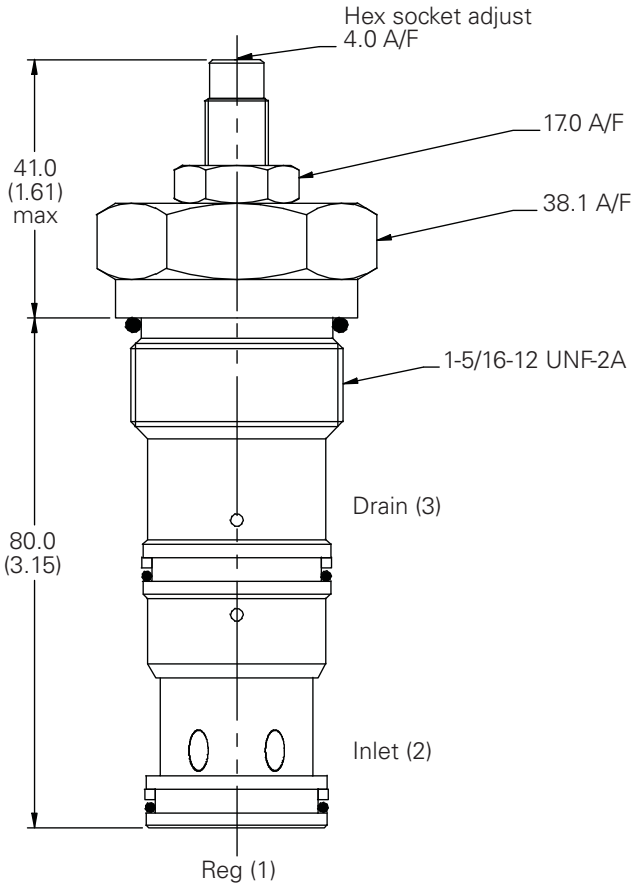

Complete valve

3/4", 1" Ports
Basic Code
1PA250

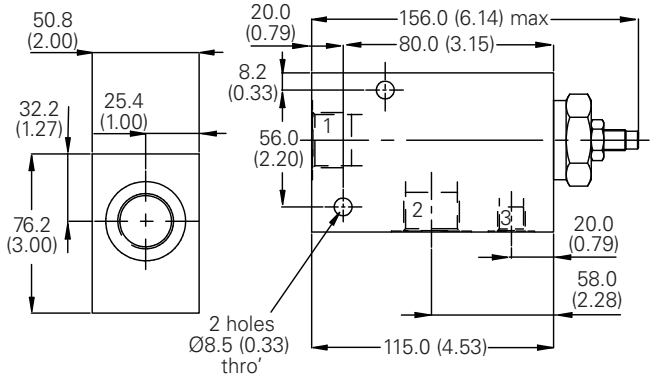

Note: Tightening torque of "F" adjuster locknut - 20 to 25 Nm

Note: For applications above 210 please consult our technical department or use the steel body option.

Where measurements are critical request certified drawings. We reserve the right to change specifications without notice.

E

1PDC5 - Pressure reducing valve

Direct acting 2 ported Pressure reducing valve with check
6L/min (1.5 USgpm) • 210bar (3000psi) Reg • 350bar (5000psi) Inlet

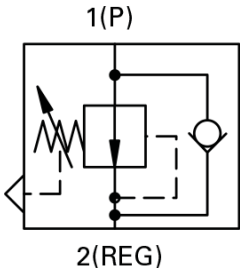

Operation

At low pressure the pilot piston keeps the ball away from the seat allowing flow from port 1to 2. As the pressure in the line increases the pilot piston is forced back against the spring until the ball sits on the seat. The inlet pressure can then rise up to the maximum system pressure. If the inlet pressure is removed then the ball will remain on the seat limiting the leakage to less than 1/3 cc/ min.

It should be noted that if the inlet pressure remains higher than the set pressure then leakage may take place from port 1 to port 2. If the regulated line has no leakage then the regulated pressure may rise in time to the inlet pressure.

Features

Hardened seat and ball provide good sealing over the life of the valve. External parts surface hardened.

Sectional view

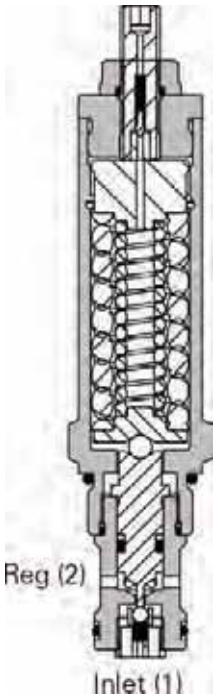

Performance data

Ratings and specifications

Figures based on: Oil Temp=40 C Viscosity = 32 cSt (150 SUS)	
Max setting	210 bar (3000psi)
Max inlet pressure	350 bar (5000 psi)
Rated Flow	6 lts/min (1.5 US gpm)
Cavity	C-12-2
Standard housing material	Aluminium up to 210 bar add suffix "377"for steel option
Temperature range	-40˚ to 120˚C (-40˚ to 248˚F)
Fluids	All general purpose hydraulic fluids such as MIL-H-5606, SAE 10, SAE 20 etc
Filtration	Cleanliness code 18/16/13
Weight Cartridge only	0, 62Kg (1.36 lbs)
Seal kit	02-165889 Nitrile 02-165888 Viton®

Description

The 1PDC5 is a direct acting poppet type pressure reducing valve with a free flow check. The valve is used where leakage past the reducing valve is very important to maintain reduced locked in pressure in an accumulator or other pressurised systems.

Pressure drop

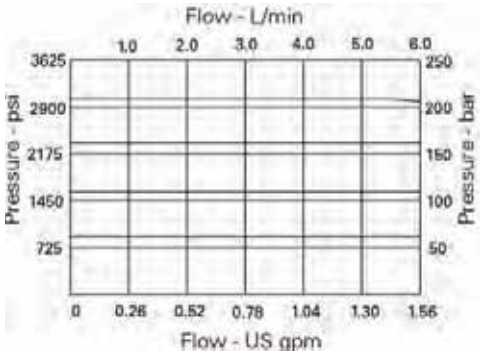

Regulated Pressure

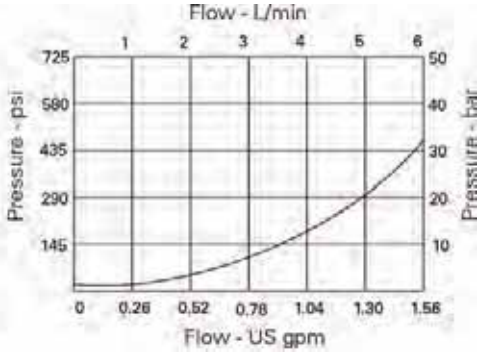

Free Flow Pressure Drop

Where measurements are critical request certified drawings. We reserve the right to change specifications without notice.

1PDC5 - Pressure reducing valve

Direct acting 2 ported Pressure reducing valve with check
6L/min (1.5 USgpm) • 210bar (3000psi) Reg • 350bar (5000psi) Inlet

Model code

1PDC5-12 – F – 4W 20 S

1 2 3 4 5

1 Function

1PDC5-12 - Pressure reducing valve with free flow check

2 Adjustment

F - Screw adjust

3 Port sizes - bodied valves only

Code	Port size	Aluminium	Steel
4W	1/2" BSPP	02-161118	02-172062
10T	SAE 10	02-160640	02-169744

4 Pressure range

20 - 30 - 210 bar
Standard setting 100 bar

5 Seals

S - Nitrile - for standard temperatures and most fluid applications

E

Dimensions

mm (inch)

Cartridge only

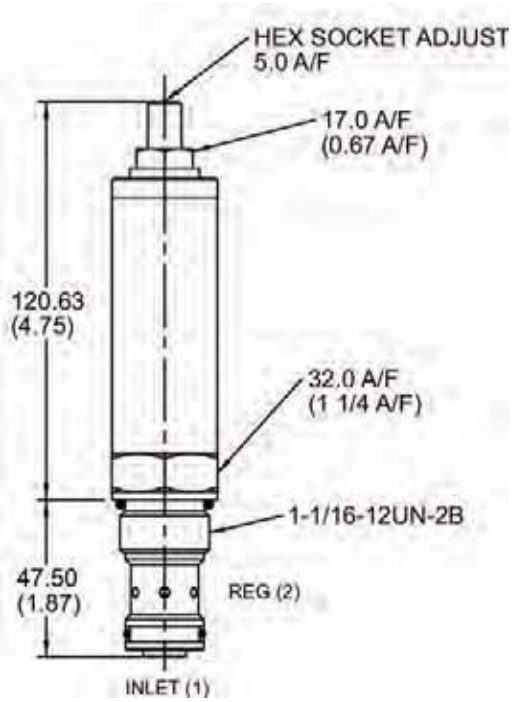

Torque cartridge into housing

A - 81-95Nm (60-70 ft lbs)
S - 102-115 Nm (75-85 ft lbs)

Installation drawing

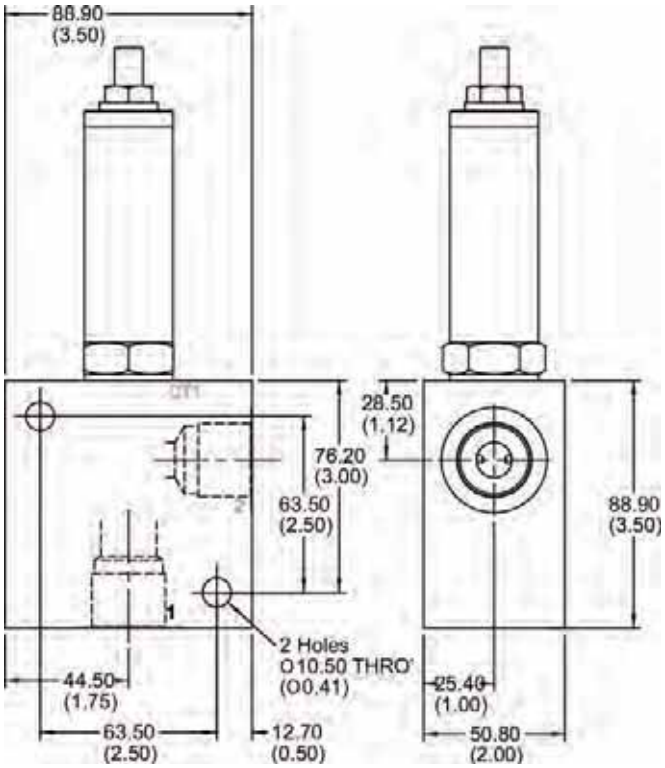

⚠ Warning

Aluminum housings can be used for pressures up to 210 bar (3000 psi). Steel housings must be used for operating pressures above 210 bar (3000 psi).

Where measurements are critical request certified drawings. We reserve the right to change specifications without notice.

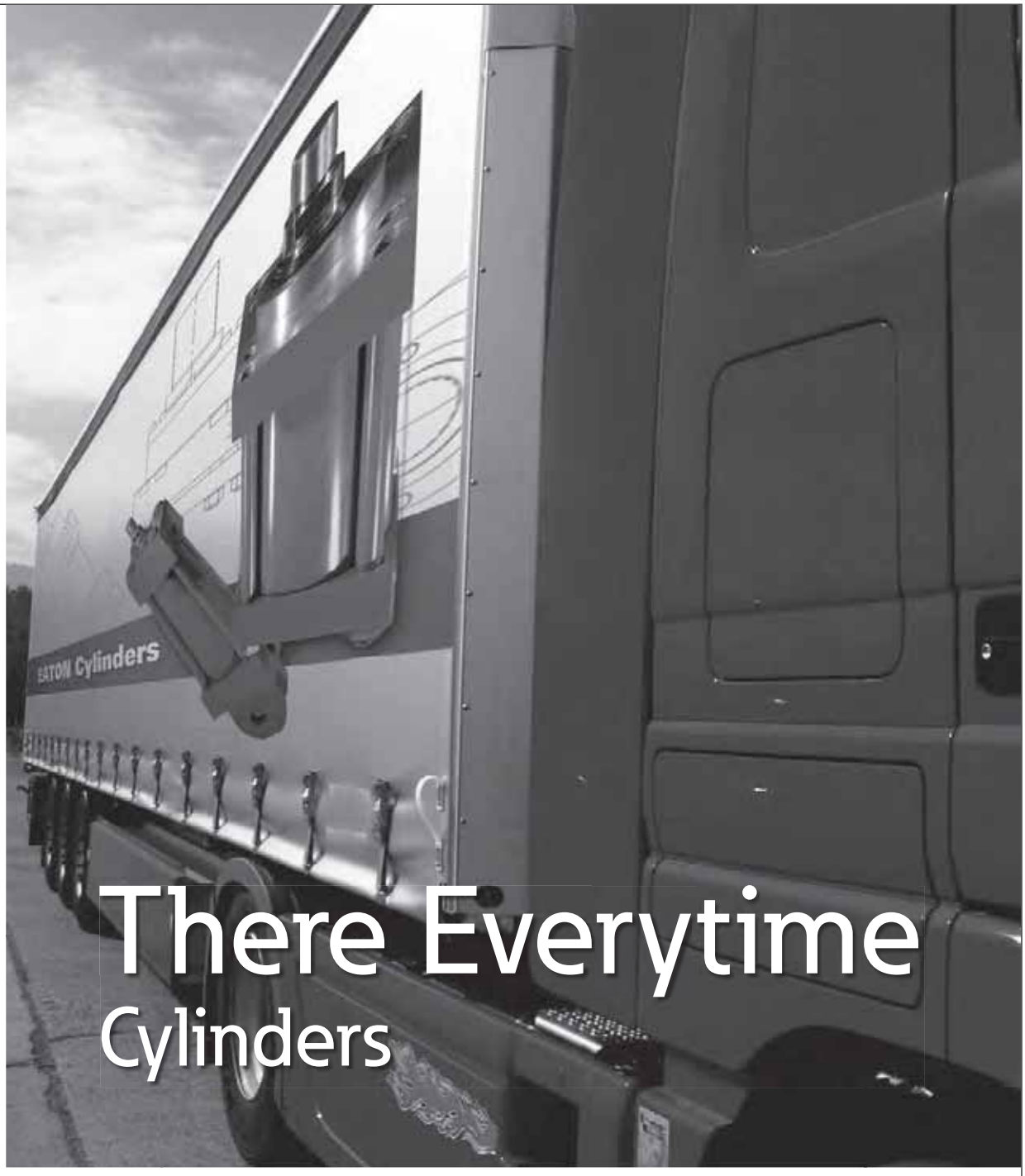

There Everytime
Cylinders

EATON
Powering Business Worldwide

Ease of Doing Business

- Online Configurators with Drawings
- HLpSpec
- ProSpec
- Online RFQ
- E3 Delivery Program

Motion control valves

Motion control functions for applications up to 350 bar (5000 psi) and 550 L/min (143 USgpm)



Powering Business Worldwide

Motion control valves

MOTION CONTROLS F-4
MOTION CONTROL VALVES F-8
1CE20 - OVERCENTER VALVE F-10
1CE30 - OVERCENTER VALVE F-12
1CEH30 - HIGH PRESSURE OVERCENTER VALVE F-14
1CER30 - OVERCENTER VALVE F-16
1CERH30 - HIGH PRESSURE OVERCENTER VALVE F-18
1CEB30 - OVERCENTER VALVE F-20
1CEBD30 - OVERCENTER VALVE F-22
1CEL30 - OVERCENTER VALVE F-24
1CPBD30 - OVERCENTER VALVE F-26
1CE SERIES - OVERCENTER VALVE F-28
1CE90 - OVERCENTER VALVE F-30
1CEH90 - HIGH PRESSURE OVERCENTER VALVE F-32
1CER90 - OVERCENTER VALVE F-34
1CERH90 - HIGH PRESSURE OVERCENTER VALVE F-36
1CEB90 - OVERCENTER VALVE F-38
1CEBD90 - OVERCENTER VALVE F-40
1CEL90 - OVERCENTER VALVE F-42
1CPBD90 - OVERCENTER VALVE F-44
1CPPD90 - PILOTED BI-DIRECTIONAL POPPET VALVE F-46
1CE120 - OVERCENTER VALVE F-48
1CEB120 - OVERCENTER VALVE F-50
1CEBD120 - OVERCENTER VALVE F-52
1CPBD120 - OVERCENTER VALVE F-54
1CE - OVERCENTER VALVE F-56
1CE140 - OVERCENTER VALVE F-58
1CER140 - OVERCENTER VALVE F-60
1CEL140 - OVERCENTER VALVE F-62
1CE300 - OVERCENTER VALVE F-64
1CEB300 - OVERCENTER VALVE F-66
1CEBD300 - OVERCENTER VALVE F-68
1CPBD300 - OVERCENTER VALVE F-70
1CPPD300 - PILOTED BI-DIRECTIONAL POPPET VALVE F-72
1CE356 SERIES - OVERCENTER VALVE F-74
1SE30 - OVERCENTER VALVE F-76
1SER30 - OVERCENTER VALVE F-78
1SEB30 - OVERCENTER VALVE F-80
1SEL30 - OVERCENTER VALVE F-82
1SE90 - OVERCENTER VALVE F-84
1SER90 - OVERCENTER VALVE F-86
1SEB90 - OVERCENTER VALVE F-88
1SEL90 - OVERCENTER VALVE F-90
1SE140 - OVERCENTER VALVE F-92
1SER140 - OVERCENTER VALVE F-94
1SEL140 - OVERCENTER VALVE F-96
1CEESH35 - DUAL OVERCENTER VALVE F-98
1CEESH95 - DUAL OVERCENTER VALVE F-100
1CEESH150 - DUAL OVERCENTER VALVE F-102
1CEESH350 - DUAL OVERCENTER VALVE F-104
1CEEC35 - MOTION CONTROL AND LOCK VALVE F-106
1CEEC95 - MOTION CONTROL & LOCK VALVE F-108
1CEEC150 - MOTION CONTROL & LOCK VALVE F-110
1CEEC350 - MOTION CONTROL & LOCK VALVE F-112
1CEECSH35 - MOTION CONTROL & LOCK VALVE F-114
1CEECSH95 - MOTION CONTROL & LOCK VALVE F-116
1CEECSH150 - MOTION CONTROL & LOCK VALVE F-118
1CEECSH350 - MOTION CONTROL & LOCK VALVE F-120
1CEBL - BOOMLOC VALVES F-123
1CEBL256 - BOOMLOC VALVE F-124
1CEBL356 - BOOMLOC VALVE F-126
1CEBL556 - BOOMLOC VALVE F-128
1CEBL31 - BOOMLOC VALVE F-130
1CEBL91 - BOOMLOC VALVE F-136
1CEBL151 - BOOMLOC VALVE F-138
1CEBL153 - BOOMLOC VALVE F-140

Functional symbol

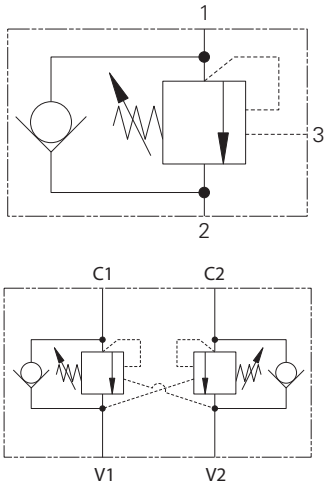

Model	Cavity	Flow rating	Typical pressure	Page
OCV standard		L/min (USgpm)	bar (psi)	
1CE20	A22903	20 (5)	270 (4000)	F-10
1CE30	A6610	30 (8)	270 (4000)	F-12
1CEH30	A6610	30 (8)	350 (5000)	F-14
1CE90	A12336	90 (23)	270 (4000)	F-30
1CEH90	A12336	90 (23)	350 (5000)	F-32
1CE120	A877	120 (32)	270 (4000)	F-48
1CE140	A20081	140 (37)	340 (4390)	F-58
1CE300	A6935	300 (80)	270 (4000)	F-64
1SE30	A20090-T11A	30 (8)	270 (4000)	F-76
1SE90	A20092-T2A	90 (23)	270 (4000)	F-84
1SE140	A20094-T17A	140 (37)	340 (4390)	F-92

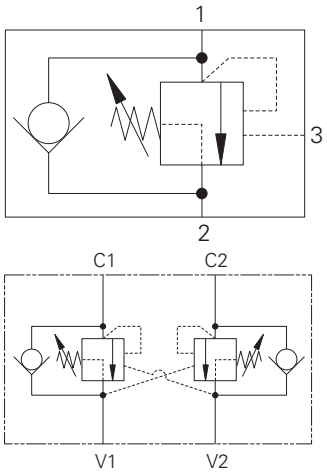

Model	Cavity	Flow rating	Typical pressure	Page
OCV part balanced		L/min (USgpm)	bar (psi)	
1CER30	A6610	30 (8)	270 (4000)	F-16
1CERH30	A6610	30 (8)	350 (5000)	F-18
1CER90	A12336	90 (23)	270 (4000)	F-34
1CERH90	A12336	90 (23)	350 (5000)	F-36
1CER140	A20081	140 (37)	340 (4390)	F-60
1SER30	A20090-T11A	30 (8)	270 (4000)	F-78
1SER90	A20092-T2A	90 (23)	270 (4000)	F-86
1SER140	A20094-T17A	140 (37)	340 (4390)	F-96

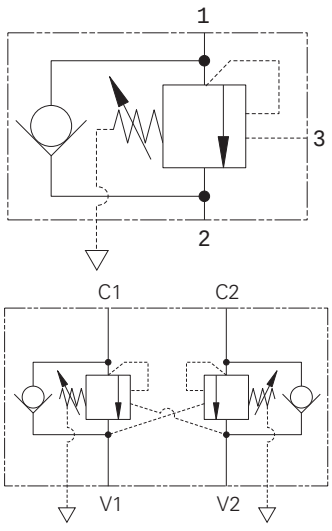

Model	Cavity	Flow rating	Typical pressure	Page
OCV fully balanced		L/min (USgpm)	bar (psi)	
1CEB30	A6610	30 (8)	270 (4000)	F-20
1CEB90	A12336	90 (23)	270 (4000)	F-38
1CEB120	A877	120 (32)	270 (4000)	F-50
1CEB300	A6935	300 (80)	270 (4000)	F-66
1SEB30	A20090-T11A	30 (8)	270 (4000)	F-80
1SEB90	A20092-T2A	90 (23)	270 (4000)	F-88

Where measurements are critical request certified drawings. We reserve the right to change specifications without notice.

Functional symbol

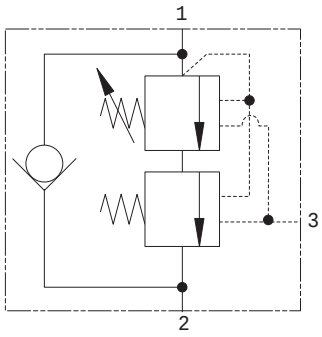

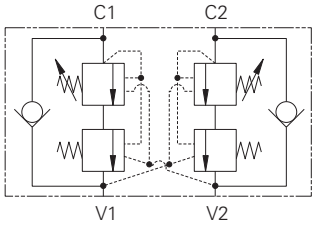

Model	Cavity	Flow rating	Typical pressure	Page
OCV counterbalanced		L/min (USgpm)	bar (psi)	
1CEL30	A6610	30 (8)	380 (5510)	F-24
1CEL90	A12336	90 (23)	380 (5510)	F-42
1CEL140	A20081	140 (37)	380 (5510)	F-62
1SEL30	A20090-T11A	30 (8)	380 (5510)	F-82
1SEL90	A20092-T2A	90 (23)	380 (5510)	F-90
1SEL140	A20094-T17A	140 (37)	380 (5310)	F-96

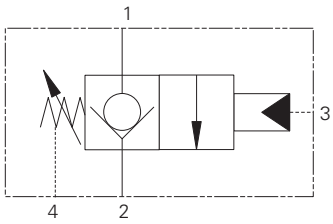

Model	Cavity	Flow rating	Typical pressure	Page
OCV zero differential		L/min (USgpm)	bar (psi)	
1CPBD30	AXP 20530	30 (8)	350 (5000)	F-26
1CPBD90	A12196	90 (23)	350 (5000)	F-44
1CPBD120	A6726	180 (47)	400 (5800)	F-54
1CPBD300	A13098	300 (80)	400 (5800)	F-70

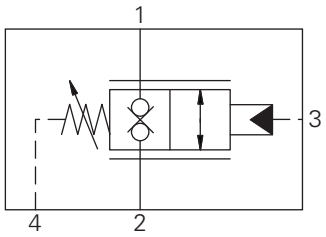

Model	Cavity	Flow rating	Typical pressure	Page
OCV normally closed zero differential		L/min (USgpm)	bar (psi)	
1CPPD90	A12196	90 (23)	350 (5000)	F-46
1CPPD300	A13098	300 (80)	350 (5000)	F-72

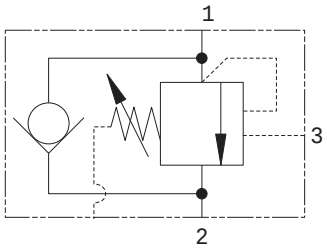

Model	Cavity	Flow rating	Typical pressure	Page
OCV fully balanced		L/min (USgpm)	bar (psi)	
1CEBD30	A20530	30 (8)	350 (5000)	F-22
1CEBD90	A12196	90 (23)	270 (4000)	F-40
1CEBD120	A6726	180 (47)	270 (4000)	F-52
1CEBD300	A13098	300 (80)	270 (4000)	F-68

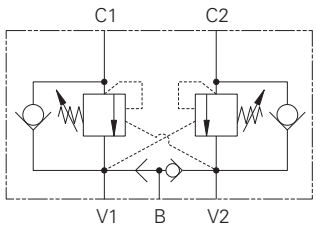

Model	Cavity			
Motion control valve, with brake shuttle		L/min (USgpm)	bar (psi)	Page
1CEESH35		30 (8)	270 (4000)	F-98
1CEESH95		90 (23)	270 (4000)	F-100
1CEESH150		150 (40)	270 (4000)	F-102
1CEESH350		300 (80)	270 (4000)	F-104

Where measurements are critical request certified drawings. We reserve the right to change specifications without notice.

Motion controls

Valve locator

Functional symbol

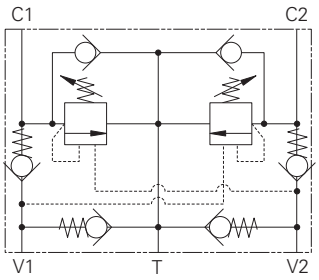

Model	Cavity	Flow rating	Typical pressure	Page
Motion control valve & lock		**L/min (USgpm)**	**bar (psi)**	
1CEEC35		30 (8)	270 (4000)	F-106
1CEEC95		95 (25)	270 (4000)	F-108
1CEEC150		150 (40)	270 (4000)	F-110
1CEEC350		300 (80)	270 (4000)	F-112

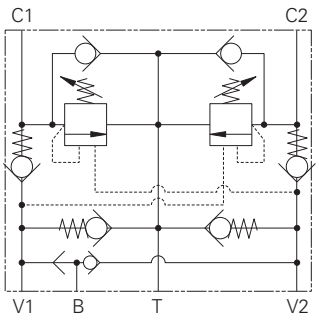

Model	Cavity	Flow rating	Typical pressure	Page
Motion control valve & lock with brake shuttle		**L/min (USgpm)**	**bar (psi)**	
1CEECSH35		30 (8)	270 (4000)	F-114
1CEECSH95		95 (25)	270 (4000)	F-116
1CEECSH150		150 (40)	270 (4000)	F-118
1CEECSH350		350 (80)	270 (4000)	F-120

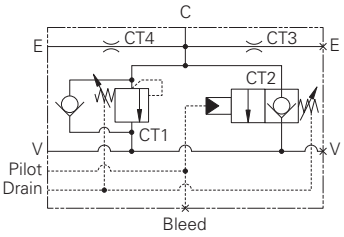

Model	Cavity	Flow rating	Typical pressure	Page
BoomLoc		**L/min (USgpm)**	**bar (psi)**	
1CEBL256		250 (66)	350 (5000)	F-124
1CEBL356		350 (92)	350 (5000)	F-126

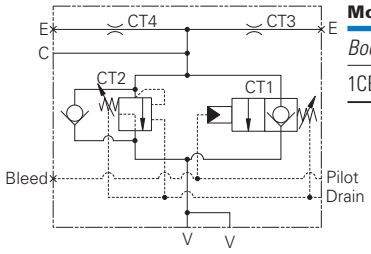

Model	Cavity	Flow rating	Typical pressure	Page
BoomLoc		**L/min (USgpm)**	**bar (psi)**	
1CEBL556		550 (145)	400 (5800)	F-128

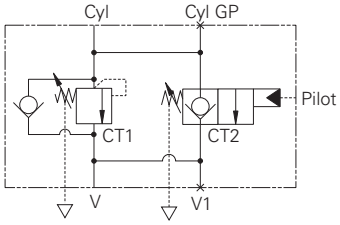

Model	Cavity	Flow rating	Typical pressure	Page
BoomLoc		**L/min (USgpm)**	**bar (psi)**	
1CEBL31F3W35P		30 (8)	350 (5000)	F-130

Where measurements are critical request certified drawings. We reserve the right to change specifications without notice.

Functional symbol

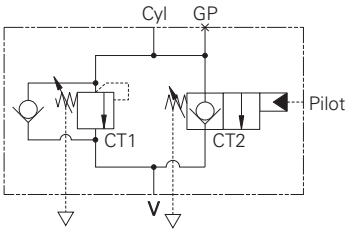

Model	Cavity	Flow rating	Typical pressure	Page
BoomLoc		L/min (USgpm)	bar (psi)	
1CEBL31F1/2635P		30 (8)	350 (5000)	F-133

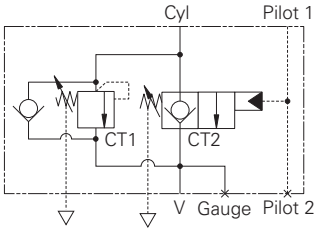

Model	Cavity	Flow rating	Typical pressure	Page
BoomLoc		L/min (USgpm)	bar (psi)	
1CEBL31F4W35P		30 (8)	350 (5000)	F-135

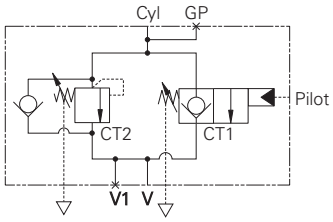

Model	Cavity	Flow rating	Typical pressure	Page
BoomLoc		L/min (USgpm)	bar (psi)	
1CEBL91F4W35P		90 (24)	350 (5000)	F-136

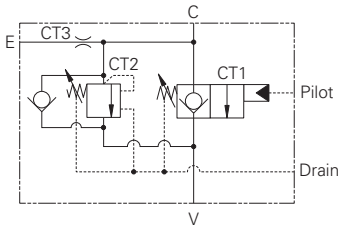

Model	Cavity	Flow rating	Typical pressure	Page
BoomLoc		L/min (USgpm)	bar (psi)	
1CEBL151F4W35P		150 (40)	350 (5000)	F-138

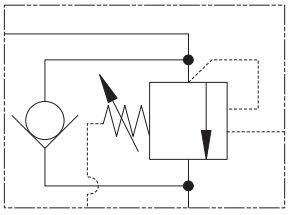

Model	Cavity	Flow rating	Typical pressure	Page
BoomLoc		L/min (USgpm)	bar (psi)	
1CEBL153F4W35P		150 (40)	350 (5000)	F-140

Where measurements are critical request certified drawings. We reserve the right to change specifications without notice.

Motion control valves

Section contents

This section contains a most extensive range of overcenter and motion control cartridges, including normal, part vented and fully vented versions. Suitable for load holding, load safety and to prevent load runaway, giving low pressure drops, various pilot ratios and excellent stability to all types of moving loads.

Adjustments

The adjustment range and Max setting figures shown throughout this catalogue give the design range for each valve, higher or lower values may be attainable but should not be used without first contacting our Engineering department. Setting must ALWAYS be carried out using an appropriate gauge and it must NOT be assumed that screwing an adjuster to its maximum or minimum position will yield the maximum or minimum stated design setting for that valve.

1CE/1CEE Overcenter cartridge pilot assisted relief with check	To control moving loads and prevent load runaway, giving load holding and hose failure safety
1CER Overcenter cartridge as 1CE series with relief balanced	As 1CE series but with relief balanced against back pressure allowing the valve to be used with closed center DCV with service line reliefs
1CEB/1CEBD Overcenter cartridge as 1CE series with relief and pilot balanced	As 1CE series but balanced on relief and pilot areas. For use on proportional systems or applications with widely varying back pressures
1CEL Overcenter cartridge with constant counterbalance pressure	This valve is used in systems where the machine framework introduces instability, such as telescopic handlers, cranes and concrete pumps
1CPB/1CPBD Pilot controlled cartridges without relief function, unaffected by back pressure	For use on boom lock applications giving load-holding and hose failure safety. With or without internal relief
1CEEC Line mounted overcenter with make up checks. Piece parts in body style	Motion control valves with make up checks and cross line relief function for use on transmission systems or single rod cylinders when dual relief is required
1CEESH/1CEECSH As ICEEC series with brake shuttle. Piece parts in body style	As ICEEC series but with added brake shuttle for removal of spring applied park brakes
1CEBL In-line or cylinder mounted BoomLoc valves incorporating 1CPB(D) cartridge and additional relief cartridge element	These overcenter valves are suitable for use on the boom and dipper cylinders of an excavator to help the manufacturer or user comply with standard ISO8643.

F

Where measurements are critical request certified drawings. We reserve the right to change specifications without notice.

Versatile, Proven, Best Value

Sectional Design for Multiple Configurations

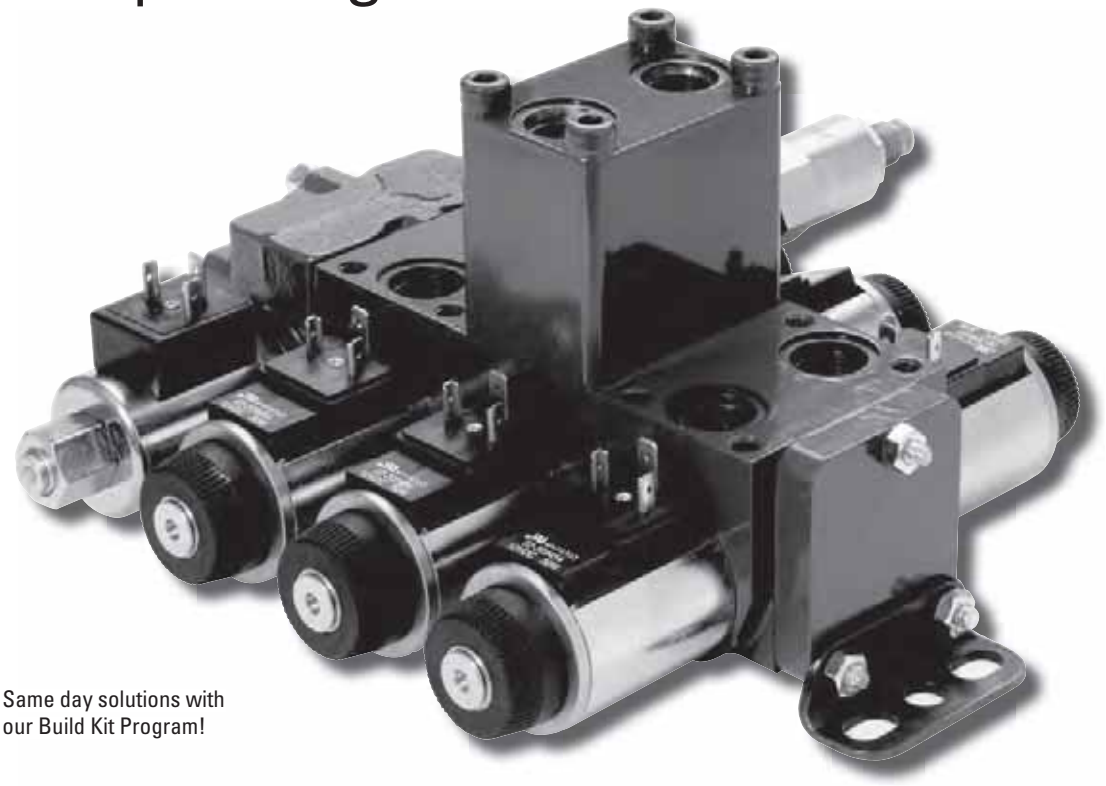

Same day solutions with our Build Kit Program!

EATON
Powering Business Worldwide

MDG Mobile Valve

Eaton's MDG mobile directional control valve uses a modular, versatile design based on our proven Vickers® DG4V3 design.

Eaton® MDG valves, truly designed for mobile applications, offer the traditional benefits of a stackable mobile valve and provide further value as circuit options for mobile manifold systems. This same versatility and flexibility applies to system applications, making it your best value for customized, multi-functional circuits.

For more information, contact your local Eaton distributor, call us at 800-547-7805 or visit us on the web at: www.eaton.com/hydraulics.

F

1CE20 - Overcenter valve

Pilot assisted relief with check
20 L/min (5 USgpm) • 270 bar (4000 psi)

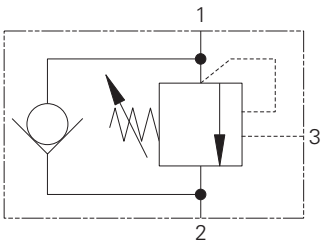

Sectional view

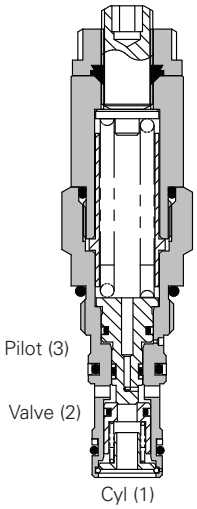

Description

Overcenter valves give static and dynamic control of loads by regulating the flow into and out of hydraulic actuators. When installed close to or within an actuator, the overcenter valve will stop runaway in the event of hose burst and if open center directional control valves are used, will allow thermal expansion relief of the hydraulic fluid.

The overcenter cartridge is ideal for mounting directly into a cavity machined in the body of the cylinder, motor or rotary actuator. The cartridge can also be mounted directly to the ports via a specifically machined body as part of a Hydraulic Integrated Circuit or single unit, or contained within one of our standard line bodies.

Single overcenter valves are normally used when the load is unidirectional, for example an aerial platform or crane and dual overcenter valves are used for controlling loads in both directional for motor applications or for cylinders going over center.

Operation

The check section allows free flow into the actuator then holds and locks the load against movement. The pilot assisted relief valve section will give controlled movement when pilot pressure is applied. The relief section is normally set to open at a pressure at least 1.3 times the maximum load induced pressure but the pressure required to open the valve and allow movement depends on the pilot ratio of the valve. For optimization of load control and energy usage, a choice of pilot ratios is available.

The pressure required to open the valve and start actuator movement can be calculated as follows:

$$\text{Pilot Pressure} = \frac{\text{(Relief Setting) - (Load Pressure)}}{\text{Pilot Ratio}}$$

Features

Cartridge is economical and fits simple cavity. Allows quick, easy field service - reduces down time. Interchangeable with pilot check valve of a similar size.

Pilot ratio

3:1 Best suited for extremely unstable applications such as long booms or flexible frameworks.

4.5:1 Best suited for applications where load varies and machine structure can induce instability.

8:1 Best suited for applications where the load remains relatively constant.

Performance data

Ratings and specifications

Figures based on: Oil Temp = 40° C Viscosity = 32 cSt (150 SUS)	
Rated flow	20 L/min (5 USgpm)
Max relief pressure	350 bar (5000 psi)
Max load induced pressure	270 bar (4000 psi)
Cartridge material	Working parts hardened and ground steel. External surfaces zinc plated.
Standard housing material	Aluminum (up to 210 bar). Add suffix "377" for steel option.
Mounting position	Unrestricted
Cavity number	A22903 (See Section M)
Torque cartridge into cavity	40 Nm (30 lbs ft)
Weight	1CE20 0.16 kg (0.35 lbs) 1CE25 0.37 kg (0.82 lbs) 1CEE24 0.41 kg (0.89 lbs)
Seal kit number	SK1276 (Nitrile) SK1276V (Viton®)
Recommended filtration level	BS5540/4 Class 18/13 (25 micron nominal)
Operating temperature	-30°C to +90°C (-22° to +194°F)
Leakage	0.3 milliliters/min nominal (5 dpm)
Nominal viscosity range	5 to 500 cSt

Viton is a registered trademark of E.I. DuPont.

Pressure drop

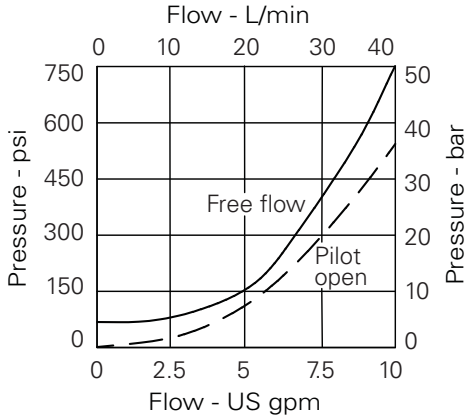

Where measurements are critical request certified drawings. We reserve the right to change specifications without notice.

Model code

1CE***	–	F	3W	–	35	S	3
1		2	3		4	5	6

1 Basic code

1CE20 - Cartridge Only
1CE25 - Cartridge and Body
1CEE24 - Cartridges and Dual Body

2 Adjustment means

F - Screw Adjustment
N - Fixed - State pressure setting required.

For fixed versions add setting in 10 bar increments to end of part number. Subject to a ±10% tolerance.

3 Port sizes

Code	Port size	Housing number - body only			
		Aluminum single	Steel single	Aluminum dual	Steel dual
3W	3/8" BSP Valve & Cyl Port. 1/4" BSP Pilot Port	B24255	B24254	B24261	B24260
6T	3/8" SAE Valve & Cyl Port. 1/4" SAE Pilot Port	B24257	B24256	B24264	B24263

4 Pressure range @ 4.8 L/min

Note: Code based on pressure in bar.

20 - 100-230 bar. Std setting 140 bar

35 - 200-350 bar. Std setting 210 bar

Std setting made at 4.8 L/min
Other pressure ranges available on request

5 Seals

S - Nitrile (For use with most industrial hydraulic oils)

SV - Viton (For high temperature and most special fluid applications)

6 Pilot ratio

3 - 3:1

4 - 4.5.1

8 - 8:1

Dimensions

mm (inch)

Cartridge only
Basic Code
1CE20

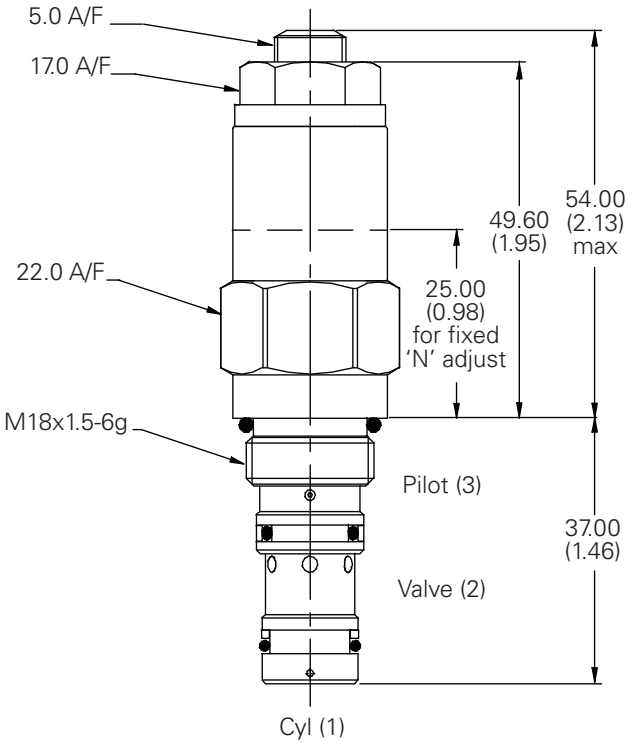

Note: For applications above 210 bar - please consult our technical department or use the steel body option.

Note: Tightening torque of "F" adjuster locknut - 20 to 25 Nm.

Single valve
3/8" Ports
Basic Code 1CE25

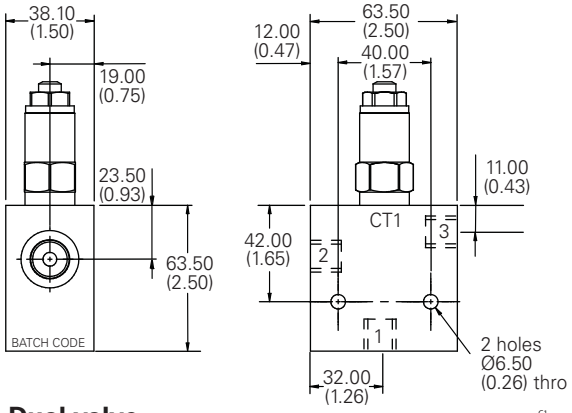

Dual valve
3/8" Ports
Basic Code 1CEE24 (Internally Cross Piloted)

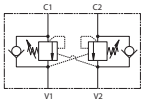

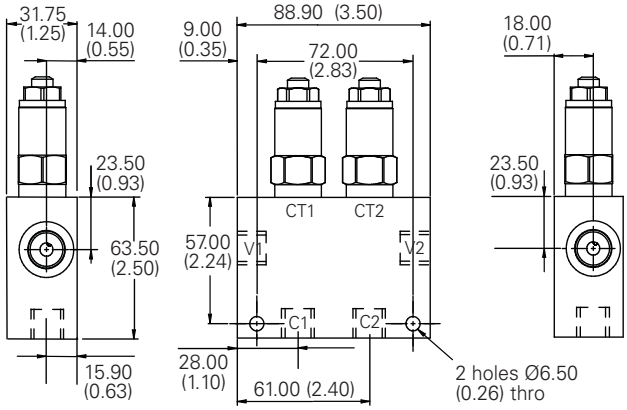

Where measurements are critical request certified drawings. We reserve the right to change specifications without notice.

1CE30 - Overcenter valve

Pilot assisted relief with check
30L/min (8 USgpm) • 270 bar (4000 psi)

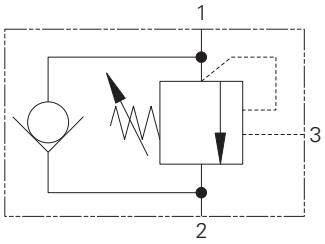

Sectional View

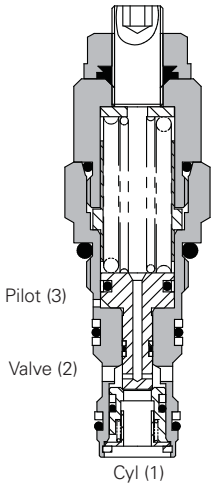

Description

Overcenter valves give static and dynamic control of loads by regulating the flow into and out of hydraulic actuators. When installed close to or within an actuator, the overcenter valve will stop runaway in the event of hose burst and if open center directional control valves are used, will allow thermal expansion relief of the hydraulic fluid.

The overcenter cartridge is ideal for mounting directly into a cavity machined in the body of the cylinder, motor or rotary actuator. The cartridge can also be mounted directly to the ports via a specifically machined body as part of a Hydraulic Integrated Circuit or single unit, or contained within one of our standard line bodies.

Single overcenter valves are normally used when the load is unidirectional, for example an aerial platform or crane and dual overcenter valves are used for controlling loads in both directional for motor applications or for cylinders going over center.

Operation

The check section allows The check section allows free flow into the actuator then holds and locks the load against movement. The pilot assisted relief valve section will give controlled movement when pilot pressure is applied. The relief section is normally set to open at a pressure at least 1.3 times the maximum load induced pressure but the pressure required to open the valve and allow movement depends on the pilot ratio of the valve. For optimization of load control and energy usage, a choice of pilot ratios is available.

The pressure required to open the valve and start actuator movement can be calculated as follows:

$$\text{Pilot Pressure} = \frac{\text{(Relief Setting) - (Load Pressure)}}{\text{Pilot Ratio}}$$

Features

Cartridge is economical and fits simple cavity. Allows quick, easy field service - reduces down time. Interchangeable with pilot check valve of a similar size.

Pilot ratio

2.5:1 Best suited for extremely unstable applications such as long booms or flexible frameworks.

5:1 (standard) Best suited for applications where load varies and machine structure can induce instability.

10:1 Best suited for applications where the load remains relatively constant.

Performance data

Ratings and specifications

Figures based on: Oil Temp = 40° C Viscosity = 32 cSt (150 SUS)	
Rated flow	30 L/min (8 USgpm)
Max relief pressure	350 bar (5000 psi)
Max load induced pressure	270 bar (4000 psi)
Cartridge material	Working parts hardened and ground steel. External surfaces zinc plated.
Standard housing material	Aluminum (up to 210 bar). Add suffix "377" for steel option.
Mounting position	Unrestricted
Cavity	A6610 (See Section M)
Torque cartridge into cavity	45 Nm (33 lbs ft)
Weight	1CE30 0.15 kg (0.33 lbs) 1CE35 0.41 kg (0.90 lbs) 1CEE34 0.90 kg (1.98 lbs)
Seal kits	SK395 (Nitrile) SK395V (Viton®)
Filtration	Cleanliness code 18/13 (25 micron nominal)
Temperature range	-30°C to +90°C (-22° to +194°F)
Internal leakage	0.3 milliliters/min nominal (5 dpm)
Nominal viscosity range	5 to 500 cSt

Viton is a registered trademark of E.I. DuPont.

Pressure drop

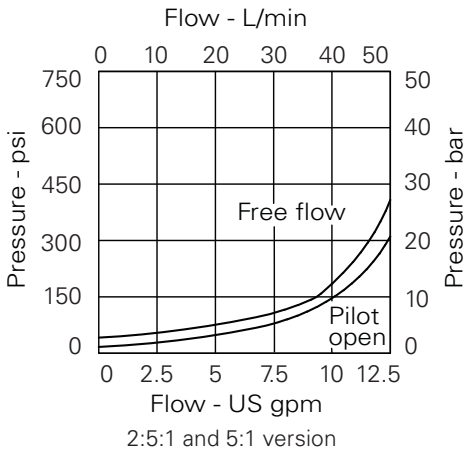

2:5:1 and 5:1 version

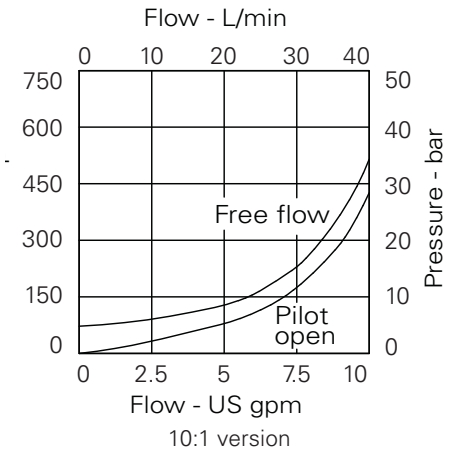

10:1 version

Where measurements are critical request certified drawings. We reserve the right to change specifications without notice.

Model code

1CE* – F 3W – 35 S 5**

1 2 3 4 5 6

1 Function

1CE30 - Cartridge Only

1CE35 - Cartridge in body

1CEE34 - Cartridges in dual body

2 Adjustment

F - Screw adjustment

N - Fixed

For fixed versions add setting in 10 bar increments to end of part number. Subject to a +/-10% tolerance.

3 Port size

Code	Port size	Housing number - body only			
		Aluminum single	Steel single	Aluminum dual	Steel dual
3W	3/8" BSPP	B6743	B12823	B6836	B13803
6T	3/8" SAE	B10536		B10805	
8T	1/2" SAE	B7884		B30237	

4 Pressure range

Note: Code based on pressure in bar.

20 - (2.5:1 and 5:1): 70-210 bar.
Std setting 100 bar
(10:1): 100-210 bar.
Std setting 100 bar

35 - (2.5:1 and 5:1): 100-350 bar.
Std setting 210 bar
(10:1): 120-350 bar.
Std setting 210 bar

5 Seal material

S - Buna-N

SV - Viton

6 Pilot ratio

2 - 2:1

5 - 5:1

10 - 10:1

F

Dimensions

mm (inch)

Note: For applications above 210 bar - please consult our technical department or use the steel body option

Note: Tightening torque of "F" adjuster locknut - 20 to 25 Nm

Cartridge only
Basic Code
1CE30

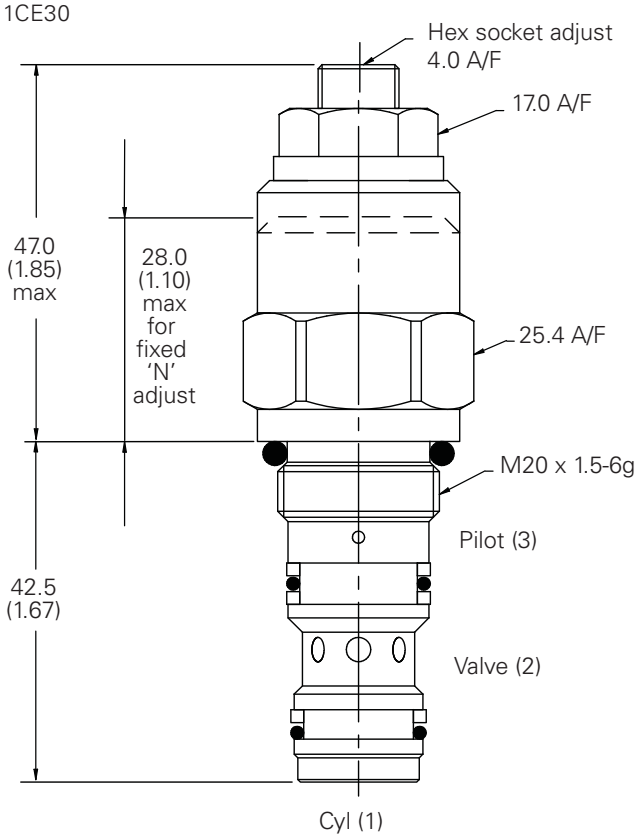

Single valve with housing
Basic Code
1CE35

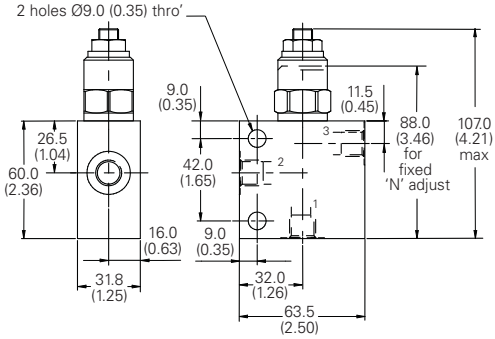

Double valve with housing
Basic Code
1CEE34

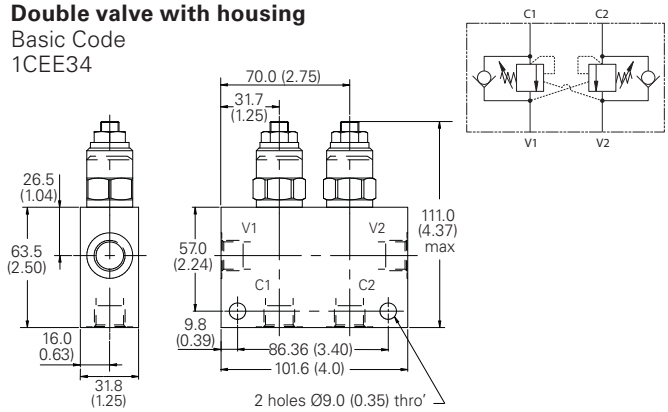

Where measurements are critical request certified drawings. We reserve the right to change specifications without notice.

1CEH30 - High pressure overcenter valve

Pilot assisted relief with check
30L/min (8 USgpm) • 350 bar (5000 psi)

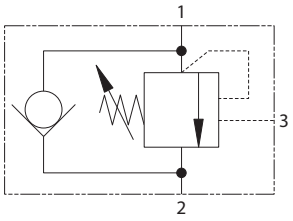

Sectional view

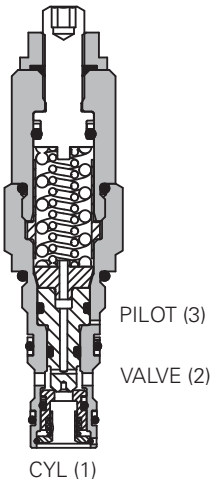

Description

Overcenter valves give static and dynamic control of loads by regulating the flow into and out of hydraulic actuators. When installed close to or within an actuator, the overcenter valve will stop runaway in the event of hose burst and if open center directional control valves are used, will allow thermal expansion relief of the hydraulic fluid.

The overcenter cartridge is ideal for mounting directly into a cavity machined in the body of the cylinder, motor or rotary actuator. The cartridge can also be mounted directly to the ports via a specifically machined body as part of a Hydraulic Integrated Circuit or single unit, or contained within one of our standard line bodies.

Single overcenter valves are normally used when the load is unidirectional, for example an aerial platform or crane and dual overcenter valves are used for controlling loads in both directional for motor applications or for cylinders going over center.

Operation

The check section allows The check section allows free flow into the actuator then holds and locks the load against movement. The pilot assisted relief valve section will give controlled movement when pilot pressure is applied. The relief section is normally set to open at a pressure at least 1.3 times the maximum load induced pressure but the pressure required to open the valve and allow movement depends on the pilot ratio of the valve. For optimization of load control and energy usage, a choice of pilot ratios is available.

The pressure required to open the valve and start actuator movement can be calculated as follows:

$$\text{Pilot Pressure} = \frac{\text{(Relief Setting) - (Load Pressure)}}{\text{Pilot Ratio}}$$

Features

Cartridge is economical and fits simple cavity. Allows quick, easy field service - reduces down time. Interchangeable with pilot check valve of a similar size.

Dynamic seals on the internal moving parts to provide longer fatigue life.

Pilot ratio

3:1 Best suited for extremely unstable applications such as long booms or flexible frameworks.

5:1 (standard) Best suited for applications where load varies and machine structure can induce instability.

Performance data

Ratings and specifications

Figures based on: Oil Temp = 40° C Viscosity = 32 cSt (150 SUS)	
Rated flow	30 L/min (8 USgpm)
Max relief pressure	430 bar (6240 psi)
Max load induced pressure	350 bar (5000 psi)
Cartridge material	Working parts hardened and ground steel. External surfaces zinc plated.
Standard housing material	Steel. Add suffix "377".
Mounting position	Unrestricted
Cavity	A6610 (See Section M)
Torque cartridge into cavity	68-75 Nm (50-56 lbs ft)
Weight	1CEH30 0.25 kg (0.55 lbs) 1CEH35 0.51 kg (1.12 lbs) 1CEEH34 1 kg (2.2 lbs)
Seal kits	9900925-000 (Nitrile) 9900926-000 (Viton®)
Filtration	Cleanliness code 18/13 (25 micron nominal)
Temperature range	-30°C to +90°C (-22° to +194°F)
Internal leakage	5 dpm - Leakage at 85% of Crack Pressure
Nominal viscosity range	5 to 500 cSt

Viton is a registered trademark of E.I. DuPont.

Pressure drop

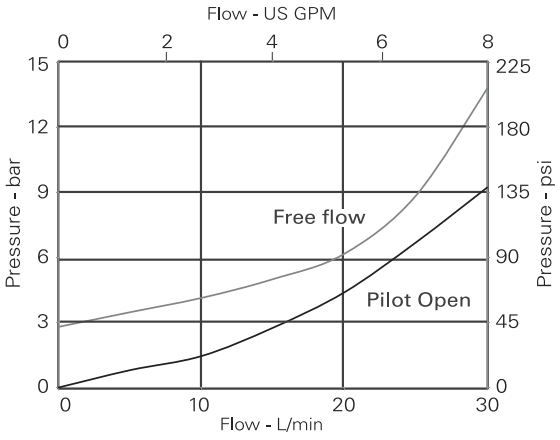

3:1 and 5:1 version

Where measurements are critical request certified drawings. We reserve the right to change specifications without notice.

Model code

1CEH* – F 3W – 43 S ***

1 2 3 4 5 6

1 Function

1CEH30 - Cartridge Only

1CEH35 - Cartridge in body

1CEEH34 - Cartridges in dual body

2 Adjustment

F - Screw adjustment

3 Port size

Code	Port size	Housing number - body only	
		Steel single	Steel dual
3W	3/8" BSPP	B12823	B13803
8T	1/2" SAE	B11811	B11812

4 Pressure range

Note: Code based on pressure in bar.

43 - (3:1 and 5:1): 250-430 bar.
Std setting 350 bar.
Std setting made at
1 L/min

Note: Contact CSR for special pressure setting.

5 Seal material

S - Buna-N

SV - Viton

6 Pilot ratio

2 - 3:1

5 - 5:1

Note: Tightening torque of "F" adjuster locknut - 20 to 25 Nm

Dimensions

mm (inch)

Cartridge only
Basic Code
1CEH30

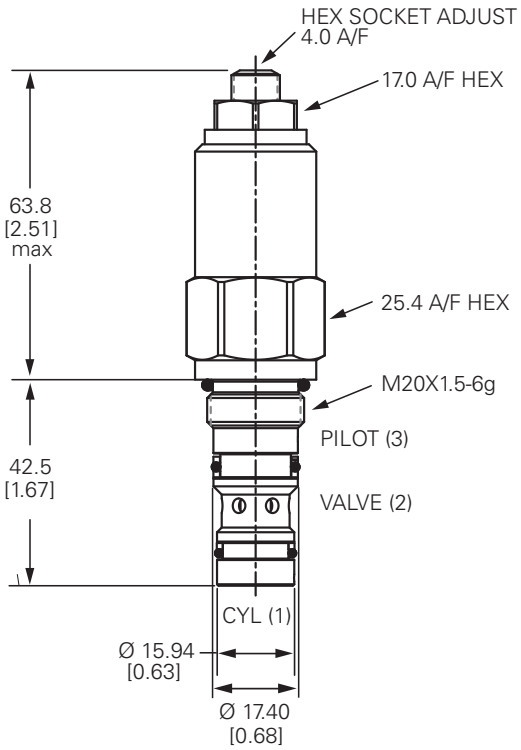

Single valve with housing
Basic Code
1CEH35

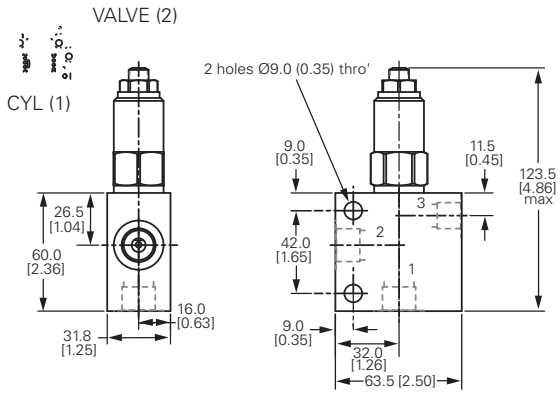

Double valve with housing
Basic Code
1CEE34

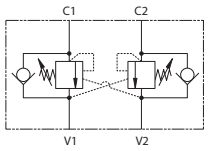

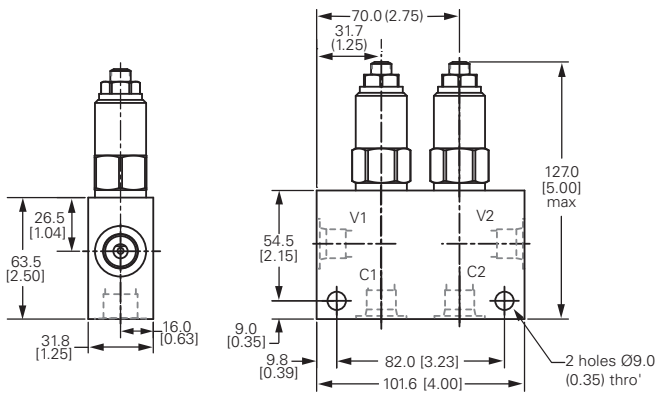

Where measurements are critical request certified drawings. We reserve the right to change specifications without notice.

F

1CER30 - Overcenter valve

Part balanced, pilot assisted relief with check
30 L/min (8 USgpm) • 270 bar (4000 psi)

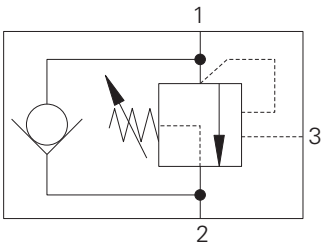

Operation

The check section allows free flow into the actuator then holds and locks the load against movement. The pilot assisted relief valve section will give controlled movement when pilot pressure is applied. The relief section is normally set to open at a pressure at least 1.3 times the maximum load induced pressure but the pressure required to open the valve and allow movement depends on the pilot ratio of the valve. For optimization of load control and energy usage, a choice of pilot ratios is available.

The pressure required to open the valve and start actuator movement can be calculated as follows:

$$\text{Pilot Pressure} = \frac{\text{(Relief Setting) - (Load Pressure)}}{\text{Pilot Ratio}}$$

Features

Cartridge is economical and fits simple cavity. Allows quick, easy field service - reduces down time. Interchangeable with pilot check valve of a similar size.

Pilot ratio

2.5:1 Best suited for extremely unstable applications such as long booms or flexible frameworks.

4:1 Best suited for applications where load varies and machine structure can induce instability.

Sectional view

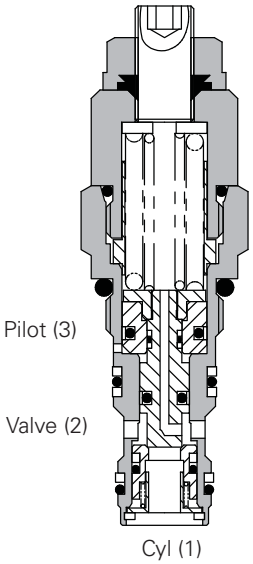

Description

The 1CER series overcenter valve performs all duties of a regular overcenter but is able to relieve and stay open irrespective of downstream pressure. This enables the valve to operate when used with a closed center directional valve which has service line reliefs. The poppet is pressure balanced, preventing relief setting increase due to back pressure.

Performance data

Ratings and specifications

Figures based on: Oil Temp = 40° C Viscosity = 32 cSt (150 SUS)	
Rated flow	30 L/min (8 USgpm)
Max relief pressure	350 bar (5000 psi)
Max load induced pressure	270 bar (4000 psi)
Cartridge material	Working parts hardened and ground steel. External surfaces zinc plated.
Standard housing material	Aluminum (up to 210 bar). Add suffix "377" for steel option.
Mounting position	Unrestricted
Cavity	A6610 (See Section M)
Torque cartridge into cavity	45 Nm (33 lbs ft)
Weight	1CER30 0.15 kg (0.33 lbs) 1CER35 0.41 kg (0.90 lbs) 1CEER34 0.90 kg (1.98 lbs)
Seal kits	SK395 (Nitrile) SK395V (Viton®)
Filtration	Cleanliness code 18/13 (25 micron nominal)
Temperature range	-30°C to +90°C (-22° to +194°F)
Internal leakage	0.3 milliliters/min nominal (5 dpm)
Nominal viscosity range	5 to 500 cSt

Viton is a registered trademark of E.I. DuPont.

Pressure drop

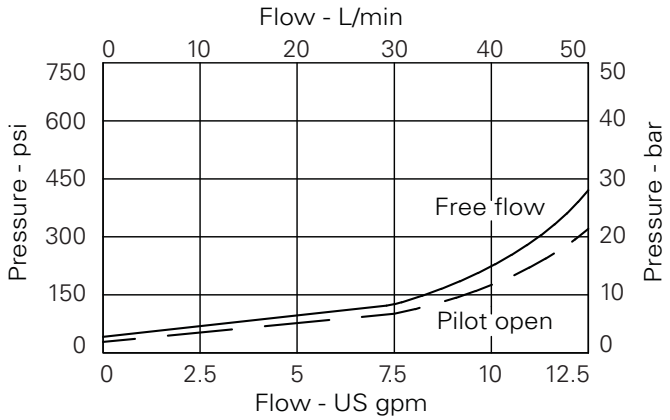

Where measurements are critical request certified drawings. We reserve the right to change specifications without notice.

Model code

1CE****	–	F	3W	–	35	S	4
1		2	3		4	5	6

1 Basic code

1CER30 - Cartridge only

1CER35 - Cartridge and body

1CEER34 - Cartridges and dual body

2 Adjustment

F - Screw adjustment

N - Fixed - State pressure setting required.

For fixed versions add setting in 10 bar increments to end of part number. Subject to a ±10% tolerance.

3 Port sizes - bodied valves only

Code	Port size	Housing number			
Body Only		Aluminum single	Steel single	Aluminum dual	Steel dual
3W	3/8" BSP Valve & Cyl Port 1/4" BSP Pilot Port	B6743	B12823	B6836	B13803
6T	3/8" SAE Valve & Cyl Port 1/4" SAE Pilot Port	B10536		B10805	
8T	1/2" SAE Valve & Cyl Port 1/4" SAE Pilot Port	B7884	B11811	B30237	B11812

4 Pressure range @ 4.8 L/min

Note: Code based on pressure in bar.

35 - 100-350 bar. Std setting 210 bar

Std setting made at 4.8 L/min

5 Seals

S - Nitrile

SV - Viton

6 Pilot ratio

2 - 2.5:1

4 - 4:1

Dimensions

mm (inch)

Cartridge only
Basic Code
1CER30

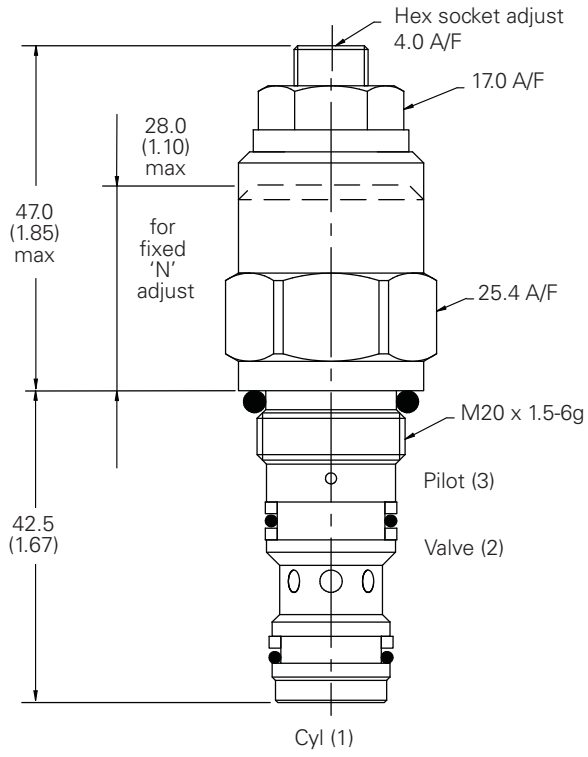

Note: For applications above 210 bar - please consult our technical department or use the steel body option

Note: Tightening torque of "F" adjuster locknut - 20 to 25 Nm

Single valve
3/8". 1/2" Ports
Basic Code 1CER35

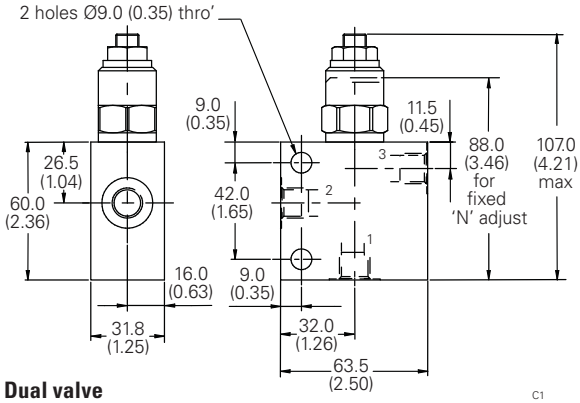

Dual valve
3/8". 1/2" Ports
Basic Code 1CEER34
(Internally Cross Piloted)

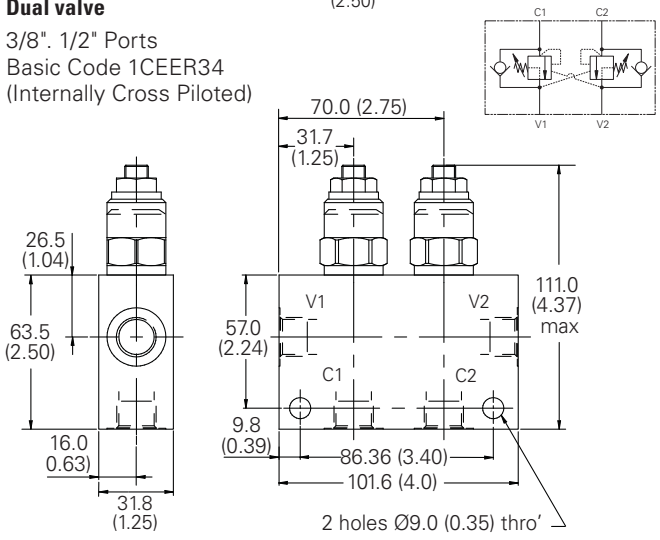

Where measurements are critical request certified drawings. We reserve the right to change specifications without notice.

F

1CERH30 - High pressure overcenter valve

Pilot assisted relief with check
30L/min (8 USgpm) • 350 bar (5000 psi)

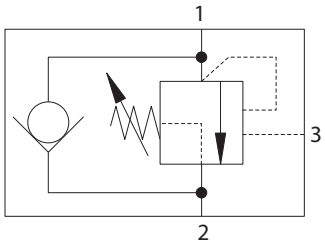

Operation

The check section allows free flow into the actuator then holds and locks the load against movement. The pilot assisted relief valve section will give controlled movement when pilot pressure is applied. The relief section is normally set to open at a pressure at least 1.3 times the maximum load induced pressure but the pressure required to open the valve and allow movement depends on the pilot ratio of the valve. For optimization of load control and energy usage, a choice of pilot ratios is available.

The pressure required to open the valve and start actuator movement can be calculated as follows:

$$\text{Pilot Pressure} = \frac{\text{(Relief Setting) - (Load Pressure)}}{\text{Pilot Ratio}}$$

Features

Cartridge is economical and fits simple cavity. Allows quick, easy field service - reduces down time. Interchangeable with pilot check valve of a similar size.

Pilot ratio

3:1 Best suited for extremely unstable applications such as long booms or flexible frameworks.

5:1 Best suited for applications where load varies and machine structure can induce instability.

Sectional view

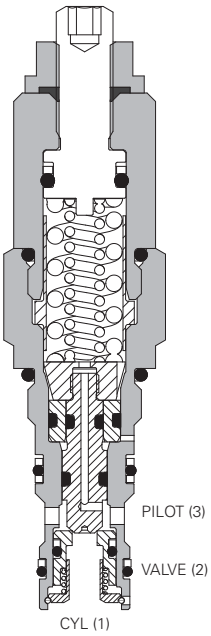

Description

The 1CERH series overcenter valve performs all duties of a regular overcenter but is able to relieve and stay open irrespective of downstream pressure. This enables the valve to operate when used with a closed center directional valve which has service line reliefs. The poppet is pressure balanced, preventing relief setting increase due to back pressure.

Performance data

Ratings and specifications

Figures based on: Oil Temp = 40° C Viscosity = 32 cSt (150 SUS)		
Rated flow		30 L/min (8 USgpm)
Max relief pressure		430 bar (6240 psi)
Max load induced pressure		350 bar (5000 psi)
Cartridge material		Working parts hardened and ground steel. External surfaces zinc plated.
Standard housing material		Steel. Add suffix "377".
Mounting position		Unrestricted
Cavity		A6610 (See Section M)
Torque cartridge into cavity		68-75 Nm (50-56 lbs ft)
Weight	1CERH30 1CERH35 1CEERH34	0.2 kg (0.55 lbs) 0.51 kg (1.12 lbs) 1.0 kg (2.2 lbs)
Seal kits		9900925-000 (Nitrile) 9900926-000 (Viton®)
Filtration		Cleanliness code 18/13 (25 micron nominal)
Temperature range		-30°C to +90°C (-22° to +194°F)
Internal leakage		5 dpm @ 85% of Cracking
Nominal viscosity range		5 to 500 cSt

Viton is a registered trademark of E.I. DuPont.

Pressure drop

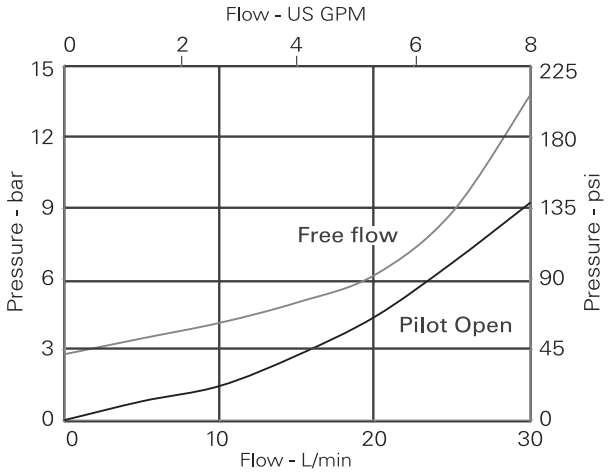

3:1 and 5:1 version

Where measurements are critical request certified drawings. We reserve the right to change specifications without notice.

Model code

1CERH** – F 3W – 43 S ***

1 2 3 4 5 6

1 Basic code

1CERH30 - Cartridge only

1CERH35 - Cartridge and body

1CEER34 - Cartridges and dual body

2 Adjustment

F - Screw adjustment

3 Port sizes - bodied valves only

Code	Port size	Housing number	
Body Only		**Steel single**	**Steel dual**
3W	3/8" BSP Valve & Cyl Port 1/4" BSP Pilot Port	B12823	B13803
8T	1/2" SAE Valve & Cyl Port 1/4" SAE Pilot Port	B11811	B11812

4 Pressure range

Note: Code based on pressure in bar.

43 - 250-430 bar. Std setting 350 bar
Std setting made at 1 L/min

Note: Contact CSR for special pressure setting.

Note: Tightening torque of "F" adjuster locknut - 20 to 25 Nm

5 Seals

S - Nitrile

SV - Viton

6 Pilot ratio

3 - 3:1

5 - 5:1

Dimensions

mm (inch)

Cartridge only
Basic Code
1CERH30

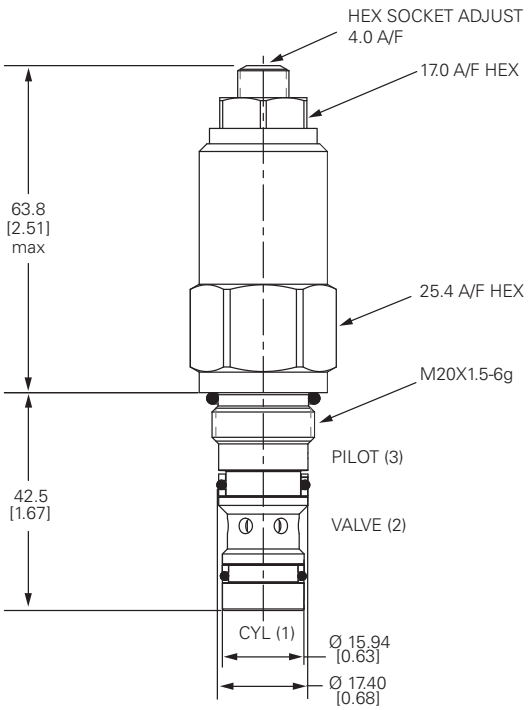

Single valve
3/8". 1/2" Ports
Basic Code 1CERH35

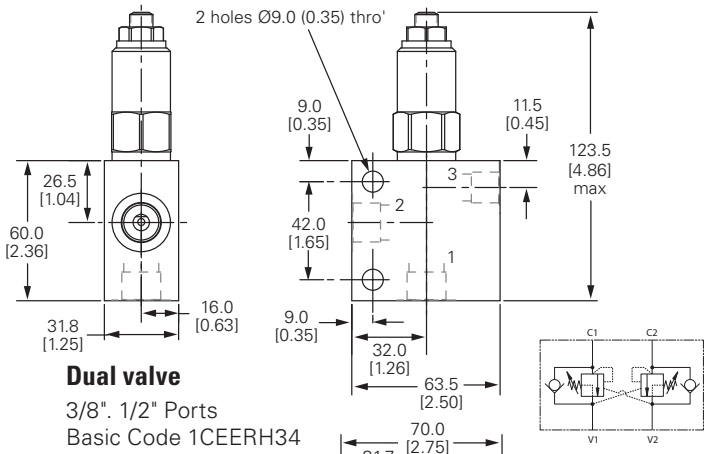

Dual valve
3/8". 1/2" Ports
Basic Code 1CEERH34
(Internally Cross Piloted)

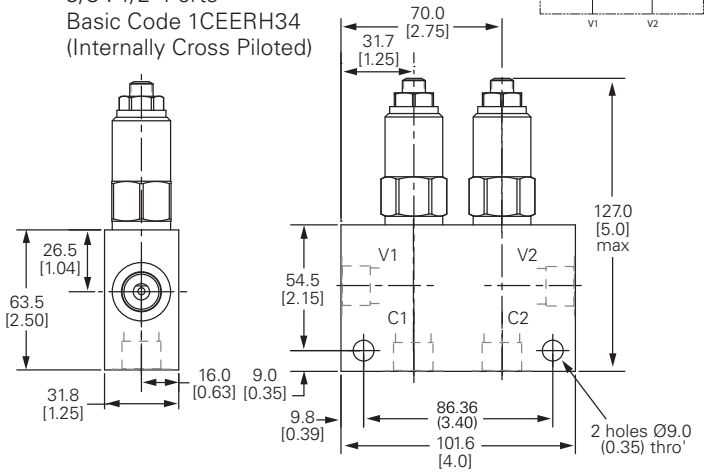

Where measurements are critical request certified drawings. We reserve the right to change specifications without notice.

1CEB30 - Overcenter valve

Fully balanced, pilot assisted, relief with check
30 L/min (8 USgpm) • 270 bar (4000 psi)

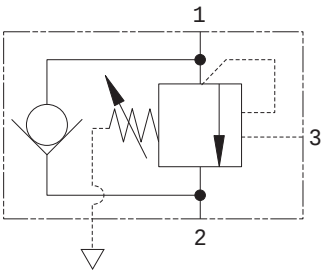

Sectional View

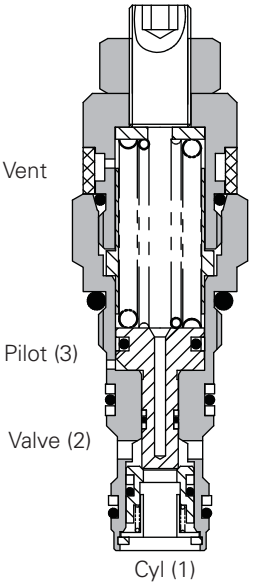

Description

Overcenter valves give static and dynamic control of loads by supplying a counterbalance pressure to the actuator. They prevent runaway in the event of hose burst and hold the load with minimal leakage.

The pressure balanced valve is unaffected by back pressure, allowing service line reliefs to operate and for the valve to be used in regenerative or proportional valve systems.

The overcenter valve should be mounted either into, onto or as close to the actuator as possible to give maximum protection.

Single overcenter valves control unidirectional loads such as in aerial platforms, cranes or winches and dual overcenters are suited to bi-directional motion such as wheel motor applications or cylinders going over center.

Operation

The check section allows free flow into the actuator then holds and locks the load against movement. The pilot assisted relief valve section will give controlled movement when pilot pressure is applied. The relief section is normally set to open at a pressure at least 1.3 times the maximum load induced pressure but the pressure required to open the valve and allow movement depends on the pilot ratio of the valve. For optimization of load control and energy usage, a choice of pilot ratios is available.

The pressure required to open the valve and start actuator movement can be calculated as follows:

$$\text{Pilot Pressure} = \frac{\text{(Relief Setting) - (Load Pressure)}}{\text{Pilot Ratio}}$$

Features

Cartridge is economical and fits simple cavity. Allows quick, easy field service - reduces down time. Interchangeable with pilot check valve of a similar size.

Pilot ratio

5.1:1 (standard) Best suited for applications where load varies and machine structure can induce instability.

Note: This valve is not suitable for high frequency applications and aggressive environmental conditions.

Performance data

Ratings and specifications

Figures based on: Oil Tem = 40°C Viscosity = 32 cSt (150 SUS)	
Rated flow	30 L/min (8 USgpm)
Max relief pressure	350 bar (5000 psi)
Max load induced pressure	270 bar (4000 psi)
Cartridge material	Working parts hardened and ground steel. External surfaces zinc plated.
Standard housing material	Aluminum (up to 210 bar). Add suffix "377" for steel option.
Mounting position	Unrestricted
Cavity number	A6610 (See Section M)
Torque cartridge into cavity	45 Nm (33 lbs ft)
Weight	1CEB30 0.14 kg (0.30 lbs) 1CEB35 0.40 kg (0.88 lbs) 1CEEB34 0.88 kg (1.94 lbs)
Seal kit number	SK395 (Nitrile SK395V (Viton®)
Recommended filtration level	BS5540/4 Class 18/13 (25 micron nominal)
Operating temperature	-30°C to +90°C (-22° to +194°F)
Leakage	0.3 milliliters/min nominal (5 dpm)
Nominal viscosity range	5 to 500 cSt

Viton is a registered trademark of E.I. DuPont.

Pressure drop

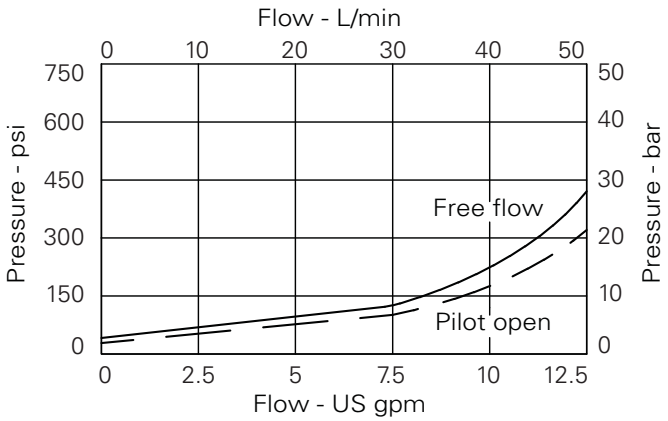

Where measurements are critical request certified drawings. We reserve the right to change specifications without notice.

Model code

1CE***	–	F	3W	–	35	S	5
1		2	3		4	5	6

1 Function

1CEB30 - Cartridge Only
1CEB35 - Cartridge and Body
1CEEB34 - Cartridges and Dual Body

2 Adjustment means

F -Screw Adjustment

N - Fixed - State pressure setting required.

For fixed versions add setting in 10 bar increments to end of part number. Subject to a ±10% tolerance.

3 Port sizes

Code	Port size	Housing number - body only			
		Aluminium single	Steel single	Aluminium dual	Steel dual
3W	3/8" BSP Valve & Cyl Port 1/4" BSP Pilot Port	B6743	B12823	B6836	B13803
6T	3/8" SAE Valve & Cyl Port 1/4" SAE Pilot Port	B10536		B10805	
8T	1/2" SAE Valve & Cyl Port 1/4" SAE Pilot Port	B7884	B11811	B30237	B11812

4 Pressure range

@ 4.8 L/min

Note: Code based on pressure in bar.

35 - 100-350 bar.
Std setting 210 bar

Std setting made at 4.8 L/min

5 Seals

S -Nitrile (For use with most industrial hydraulic oils)

SV -Viton (For high temperature and most special fluid applications)

6 Pilot ratio

5 - 5:1

Dimensions

mm (inch)

Cartridge only
Basic Code
1CEB30

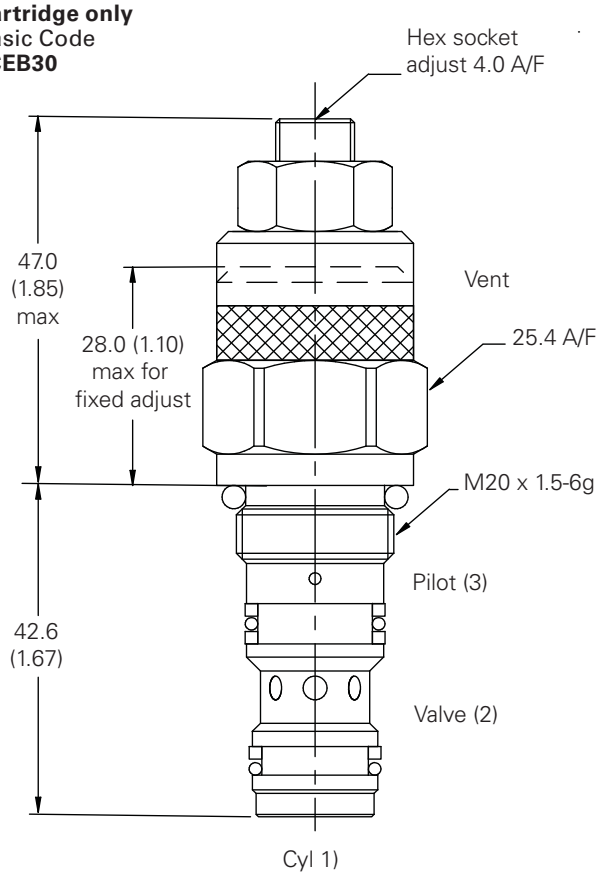

Note: For applications above 210 bar - please consult our technical department or use the steel body option

Note: Tightening torque of "F" adjuster locknut - 20 to 25 Nm

Single valve
3/8". 1/2" Ports
Basic Code
1CEB35

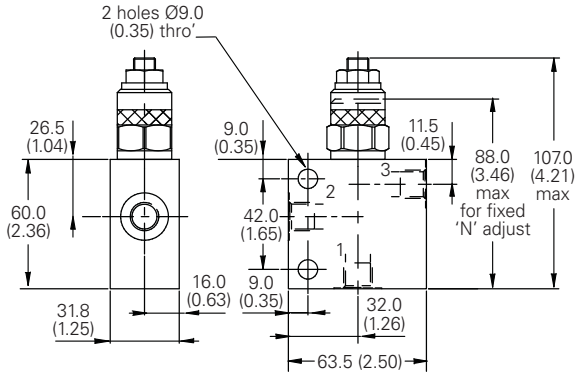

Dual valve
3/8". 1/2" Ports
Basic Code
1CEEB34
Internally Cross Piloted

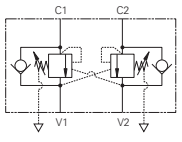

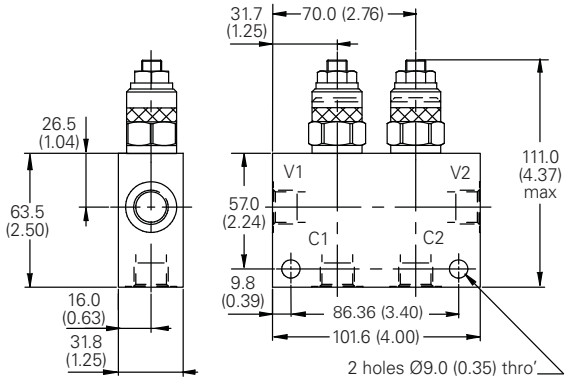

Where measurements are critical request certified drawings. We reserve the right to change specifications without notice.

1CEBD30 - Overcenter valve

Fully balanced, pilot assisted, relief
30 L/min (8 USgpm) • 270 bar (4000 psi)

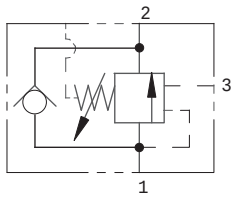

Sectional view

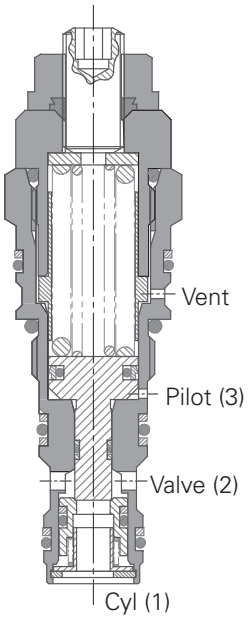

Description

Overcenter valves give static and dynamic control of loads by supplying a counterbalance pressure to the actuator. They prevent runaway in the event of hose burst and hold the load with minimal leakage.

The pressure balanced valve is unaffected by back pressure, allowing service line reliefs to operate and for the valve to be used in regenerative or proportional valve systems.

The overcenter valve should be mounted either into, onto or as close to the actuator as possible to give maximum protection.

Single overcenter valves control unidirectional loads such as in aerial platforms, cranes or winches and dual overcenters are suited to bi-directional motion such as wheel motor applications or cylinders going over center.

Operation

The check section allows free flow into the actuator then holds and locks the load against movement. The pilot assisted relief valve section will give controlled movement when pilot pressure is applied. The relief section is normally set to open at a pressure at least 1.3 times the maximum load induced pressure but the pressure required to open the valve and allow movement depends on the pilot ratio of the valve.

For optimization of load control and energy usage, a choice of pilot ratios is available.

The pressure required to open the valve and start actuator movement can be calculated as follows:

$$\text{Pilot Pressure} = \frac{\text{(Relief Setting) - (Load Pressure)}}{\text{Pilot Ratio}}$$

Features

Cartridge is economical and fits simple 'dual purpose' cavity. Allows quick, easy field service - reduces down time. Directly interchangeable with 30 litres/min pilot check valve.

Pilot ratio

5.1:

Performance data

Ratings and specifications

Figures based on Oil Temp = 40°C Viscosity = 32 cSt (150 SUS)	
Rated flow	30 L/min (8 USgpm)
Max relief setting	350 bar (5000 psi)
Max load induced pressure*	270 bar (4000 psi)
Cartridge material	Working parts hardened and ground steel. External surfaces zinc plated.
Mounting position	Unrestricted
Cavity	A20530 (See section M)
Torque cartridge into cavity	45 Nm (33 lbs ft)
Weight	0.14 kg (0.30 lbs)
Seal kit	SK1159 (Nitrile) SK1159V (Viton®) SK634P (Polyurethane/Nitrile)
Filtration	BS5540/4 Class 18/13 (25 micron nominal)
Temperature range	-20° to +90°C (-4° to +194°F)
Leakage	0.3 milliliters/min (5 dpm)
Nominal viscosity range	5 to 500 cSt

Viton is a registered trademark of E.I. DuPont.

*For applications above 210 bar please consult our technical department or use the steel body option.

Pressure drop

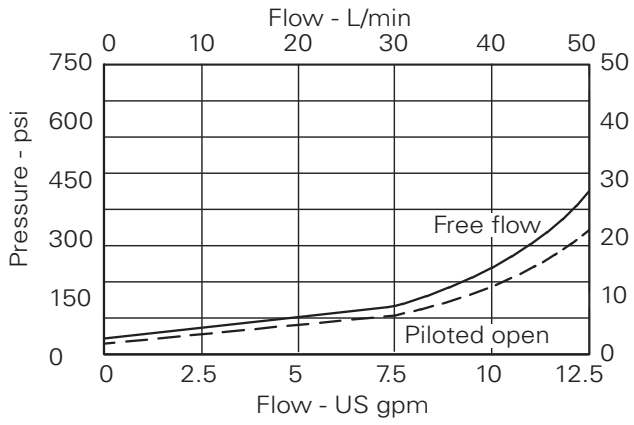

Where measurements are critical request certified drawings. We reserve the right to change specifications without notice.

Model code

1CEBD30 – F 35 – S 5

1 2 3 4 5

1 Function

1CEBD30 - Cartridge Only

2 Adjustment

F - Screw adjustment

3 Pressure range @4.8L/min

Note: Code based on pressure in bar.

20 - 70-210 bar. Standard setting 100 bar

20 - 100-350 bar.

Standard setting made at 4.8 L/min

4 Seal

S - Nitrile (for use with most industrial hydraulic oils)

SV - Viton (for high temperature and most special fluid applications)

5 Pilot ratio

5 - 5:1

Dimensions

mm (inch)

Cartridge only
Basic Code
1CEBD30

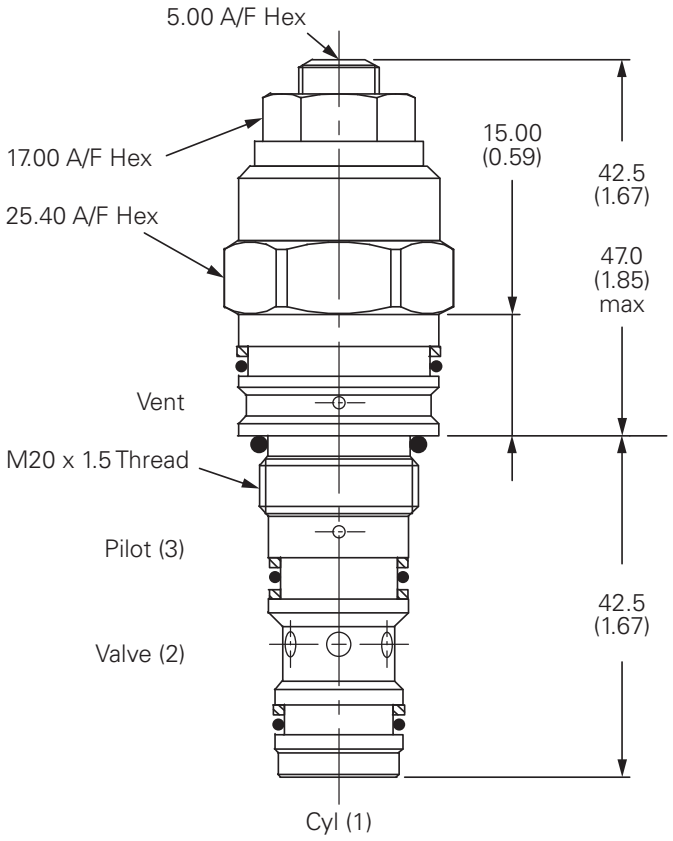

F

Where measurements are critical request certified drawings. We reserve the right to change specifications without notice.

1CEL30 - Overcenter valve

Counterbalance pilot assisted relief with check
30 L/min (8 USgpm) • 380 bar (5510 psi)

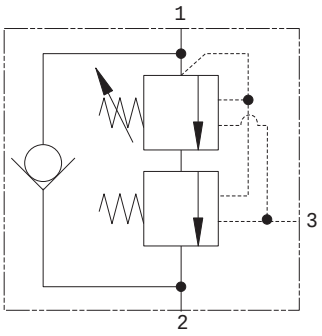

Operation

The check section allows free flow and then locks the load against movement. The pilot assisted relief valve section will give controlled movement when pilot pressure is applied, maintaining a counterbalance pressure to prevent initial pressure loss and therefore instability. The total pressure setting will normally be set at 1.3 times the load induced pressure. The counterbalance pressure reduces as the pilot pressure increases.

Features

Cartridge is economical and fits simple cavity. Allows quick, easy field service - reduces down time. Interchangeable with pilot check valve of a similar size.

Pilot ratio

Primary 4.3:1

Secondary 0.4:1

Sectional view

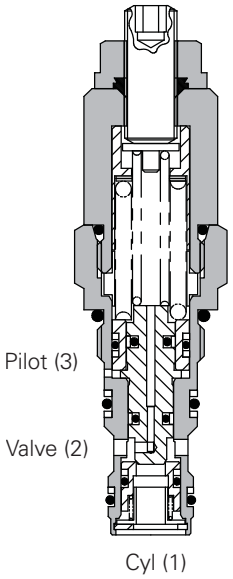

Description

The 1CEL overcenter valve performs all duties of a regular overcenter but maintains a counterbalance pressure to provide dampening of cylinders when there is a rapid loss in stored pressure. This counterbalance pressure reduces as the pilot pressure increases. Typical applications include extension cylinders on telescopic handlers where it is important to have a smooth operation when retracting from full extension.

Performance data

Ratings and specifications

Performance data is typical with fluid at 32 cST (150 SUS)	
Rated flow	30 L/min (8 USgpm)
Max setting	380 bar (5510 psi)
Internal leakage	0.3 ml/min (5 dpm)
Temperature range	-30° to +90°C (-22° to +194°F)
Cavity	A6610 (see Section M)
Torque cartridge into cavity	45 Nm (33 lbs ft)
Mounting position	Unrestricted
Filtration	BS5540/4 Class 18/13 (25 micron nominal)
Nominal viscosity range	5 to 500 cSt
Cartridge material	Working parts hardened and ground steel. External surfaces zinc plated.
Standard housing materials	Aluminium up to 210 bar. Add suffix "377" for steel option.
Weight	0.15 kg (0.33 lbs)
Seal kit	SK395 (Nitrile) SK395V (Viton®)

Viton is a registered trademark of E.I. DuPont.

Pressure drop

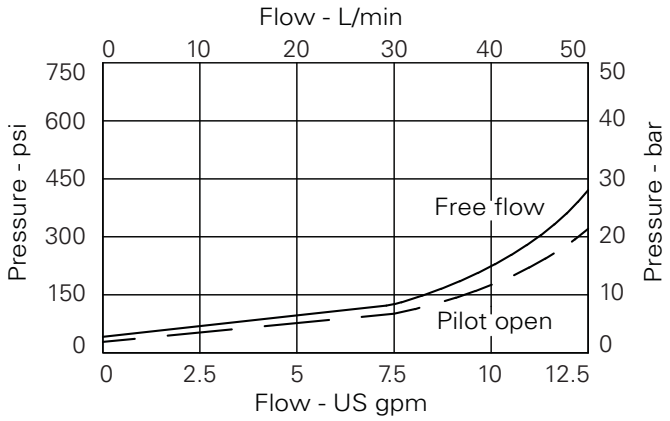

Note: This valve has been designed to eliminate instability from flexible boom applications or where he load induced pressure varies greatly. To get the best results, the settings should be adjusted for each application and then factory set for production quantities. Please contact our Technical Department for more information.

Where measurements are critical request certified drawings. We reserve the right to change specifications without notice.

Model code

1CE** – F 3W – 30 S 230 / 50**

1 2 3 4 5 6 7

1 Function

1CEL30 - Cartridge only

1CEL35 - Cartridge and body

1CEEL34 - Cartridges and dual body

2 Adjustment means/ counterbalance setting

F - Screw adjustment

For fixed versions add setting in 10 bar increments to end of part number. Subject to a ±10% tolerance.

3 Port size

Code	Port size	Housing number - body only			
		Aluminium single	Steel single	Aluminium dual	Steel dual
3W	3/8" BSP valve & cylinder port. 1/4" BSP pilot port	B6743	B12823	B6836	B13803
6T	3/8" SAE valve & cylinder port. 1/4" SAE pilot port	B10536	B10805		
8T	1/2" SAE valve & cylinder port. 1/4" SAE pilot port	B7884	B11811	B30237	B11812

4 Pressure range bar @ 4.8 L/min

Note: Code based on pressure in bar.

20 - 170-300 bar.
Std setting 220 bar

30 - 240-370 bar.
Std setting 280 bar

40 -270-380 bar.
Std setting 350 bar

Std setting made at 4.8 L/min

5 Seals

S - Nitrile

SV - Viton

6 High pressure setting bar

10 bar increments
150 to 310 bar
(2175 to 5000 psi)

7 Counterbalance setting bar

10 bar increments
20 to 120 bar (300 to 1740 psi)

Dimensions

mm (inch)

Cartridge only
Basic Code
1CEL30

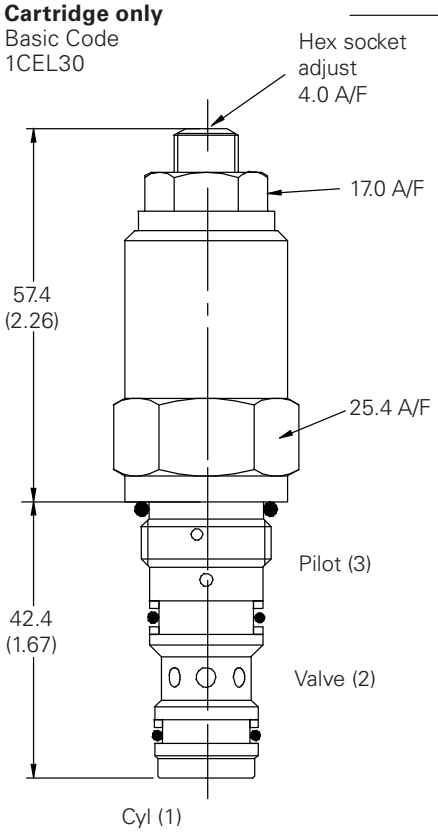

Note: Tightening torque of "F" adjuster locknut= 20-25 Nm.

Note: For applications above 210 bar - please consult our technical department or use the steel body option

Single valve
3/8". 1/2" Ports
Basic Code
1CEL35

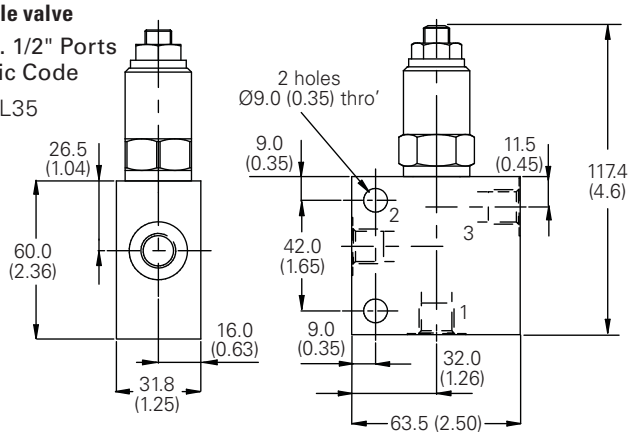

Dual valve
3/8". 1/2" Ports
Basic Code 1CEEL34
(Internally Cross Piloted)

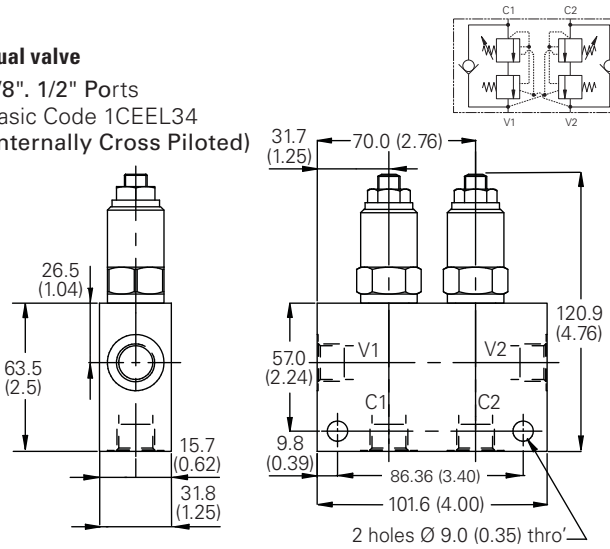

Where measurements are critical request certified drawings. We reserve the right to change specifications without notice.

1CPBD30 - Overcenter valve

Zero differential with check
30 L/min (8 USgpm) • 350 bar (5000 psi)

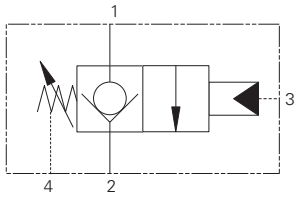

Sectional view

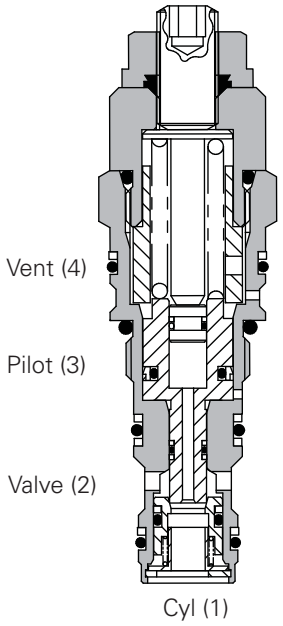

Description

Zero differential overcenter valves give static and dynamic control of loads by supplying a restriction to flow related to the opening of the valve created by the pilot pressure.

The valve is used in conjunction with a remote pilot source to provide hose failure protection, load control and load holding functions.

If over-pressure or shock pressure protection is required then a separate relief valve should be used

The drain line allows the valve to be used in corrosive atmospheres preventing the ingress of atmospheric contaminant.

Operation

The check section allows free flow into the actuator then holds and locks the load against movement. By the application of pilot pressure to the pilot port the poppet moves back against the main spring opening the cylinder port to the valve port. The metering characteristic of the valve is controlled by the rate of the spring, the seat angle and the pilot pressure applied.

Due to the balanced poppet design load induced pressure will not open the valve and once open valve port pressure will not increase the pilot pressure required to keep the valve open

Features

The cartridge fits a simple cavity allowing quick, easy field service reducing down time. Hardened poppet and seat provide for long leak free performance.

Performance data

Ratings and specifications

Figures based on: Oil Temp = 40°C Viscosity = 32 cSt (150 SUS)	
Rated flow	30 L/min (8 USgpm)
Max working pressure	350 bar (5000 psi)
Cartridge material	Working parts hardened and ground steel. External surfaces zinc plated.
Mounting position	Unrestricted
Cavity	AXP20530 (See Section M)
Torque cartridge into cavity	45 Nm (33 lbs ft)
Weight	0.15 kg (0.33 lbs)
Seal kit	SK1159 (Nitrile) SK1159V (Viton®) SK1159P (Polyurethane/Nitrile)
Filtration	BS5540/4 Class 18/13 (25 micron nominal)
Temperature range	-30° to +90°C (-22° to +194°F)
Internal leakage	0.3 milliliters/min max (5 dpm)
Nominal viscosity range	5 to 500 cSt

Viton is a registered trademark of E.I. DuPont.

Pressure drop

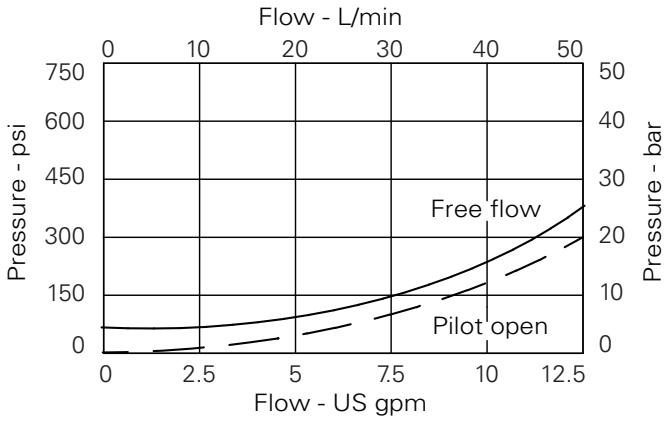

Where measurements are critical request certified drawings. We reserve the right to change specifications without notice.

Model code

1CPBD30 – F – 2 P

1 2 3 4

1 Function

1CPBD30 - Cartridge only

2 Adjustment

F - Screw adjustment

3 Pilot adjust range

Note: Code based on pressure in bar.

2 - 5-20 bar. Std setting 10 bar

Std setting made at 4.8 L/min

4 Seal material

S - Nitrile (For use with most industrial hydraulic oils)

SV - Viton (For high temperature and most special fluid applications)

P -Polyurethane/Nitrile (For arduous applications)

Dimensions

mm (inch)

Cartridge only
Basic Code 1CPBD30

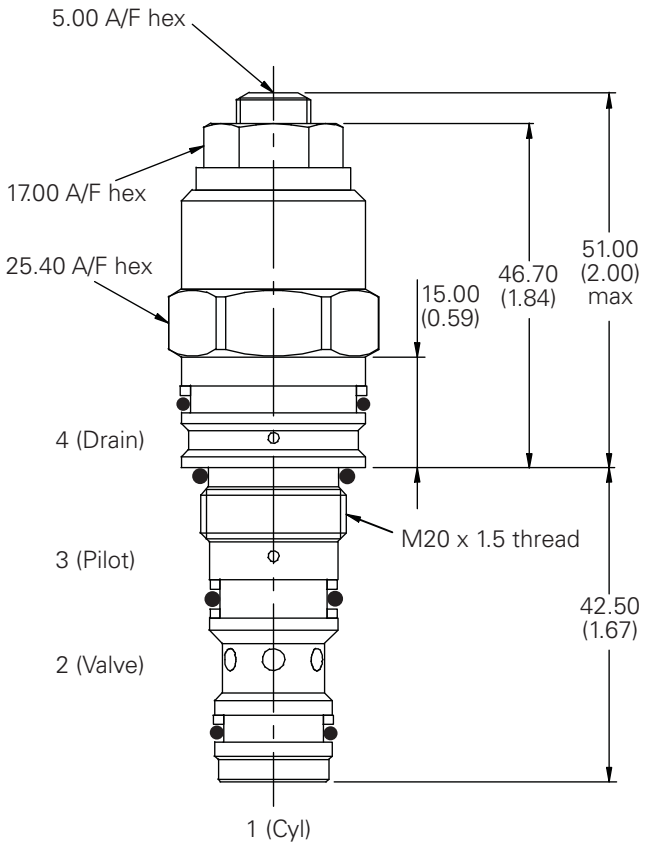

Note: Tightening torque of "F" adjuster locknut= 20-25 Nm.

F

1CE Series - Overcenter valve

Alternative body arrangements for 30 L/min valves

Model code

1C*** – F 3W – 35 S 5 230 / 50**

1 2 3 4 5 6 7 8

1 Function

1CE36/1CEB36/1CER36/1CEL36 - Cartridge & Body Through Ported

1CBE35/1CBEB35/1CBER35/1CBEL35 - Cartridge & Body Banjo

1CEG35/1CEBG35/1CERG35/1CELG35 - Cartridge & BodyGasket

1CEE35/1CEEB35/1CEER35/1CEEL35 - Cartridges & Dual Body

2 Adjustment means

F - Screw Adjustment

N - Fixed - State pressure setting required

For fixed versions add setting in 10 bar increments to end of part number. Subject to a ±10% tolerance.

3 Port sizes

Code	Port size	Housing number	
		Aluminium	**Steel**
Through Ported			
3W	3/8" BSP - Body ONLY	B13542	B13543
Banjo Mounted			
3W	3/8" BSP - Sub Assembly	AXP13617-3W-S	
Gasket Mounted			
3W	3/8" BSP - Sub Assembly	BXP13621-3W-S	
Dual Overcenter (Internally Cross Piloted)			
3W	3/8" BSP - Sub Assembly	BXP24147-3W-S	BXP24147-3W-S-377
6T	3/4" SAE - Sub Assembly	BXP24147-6T-S	

4 Pressure range @ 4.8 L/min

See cartridge data sheet

5 Seals

S - Nitrile (For use with most industrial hydraulic oils)

SV - Viton (For high temperature and most special fluid applications)

6 Pilot ratio

(omit for 1CEL30 based options)

2 - 2.5:1 **4** - 4:1
5 - 5:1 **10** - 10:1
(See cartridge details)

7 High pressure setting

(1CEL30 based options only)

bar in 10 bar increments.

8 Counterbalance setting

(1CEL30 based options only)

bar in 10 bar increments.

F

Where measurements are critical request certified drawings. We reserve the right to change specifications without notice.

Dimensions

mm (inch)

Complete valve - through ported

3/8" Ports
Basic Code

1CE36/1CEB36/1CER36/1CEL36

Banjo Bolt torque - 47 Nm

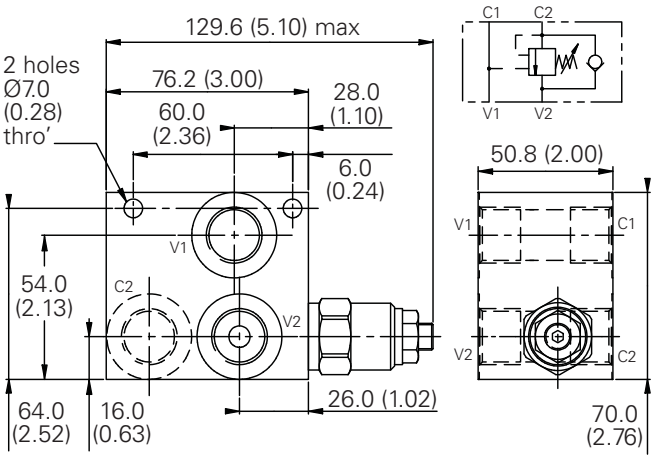

Complete valve - banjo mounted

3/8" Ports
Basic Code

1CBE35 / 1CBEB35 / 1CBER35 / 1CBEL35

Banjo Bolt torque - 47 Nm

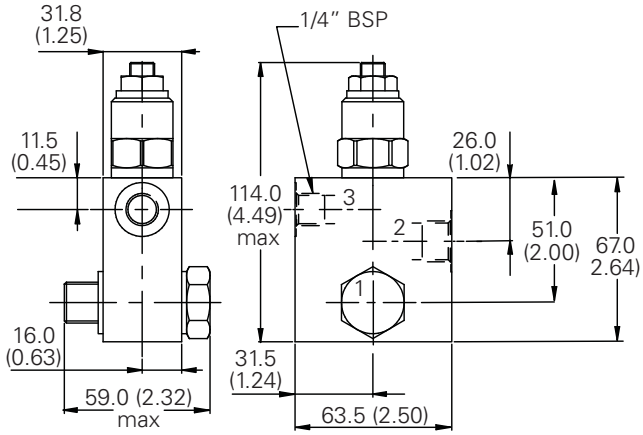

Complete valve - gasket mounted

3/8" Ports
Basic Code

1CEG35/1CEBG35/1CERG35/1CELG35

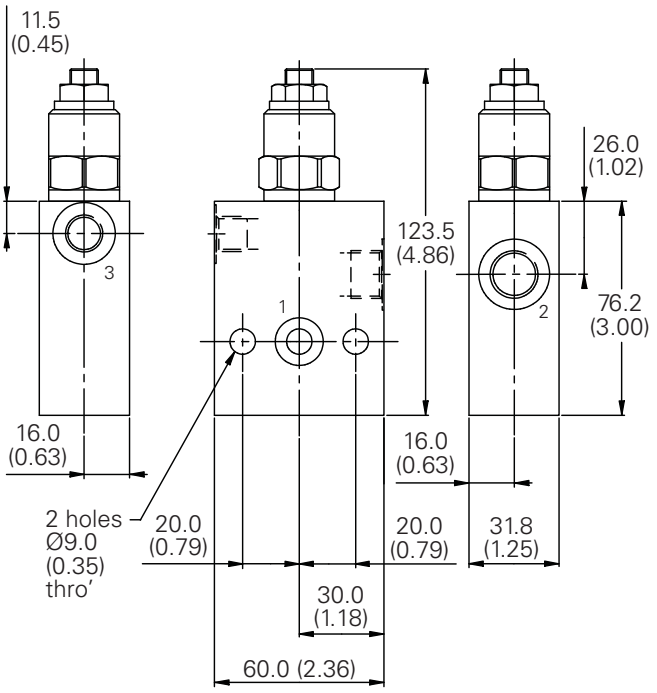

Note: Tightening torque of "F" adjuster locknut= 20-25 Nm.

Complete valve - dual overcenter

3/8" Ports
Basic Code

1CEE35/1CEEB35/1CEER35/1CEEL35

(Internally Cross-Piloted)

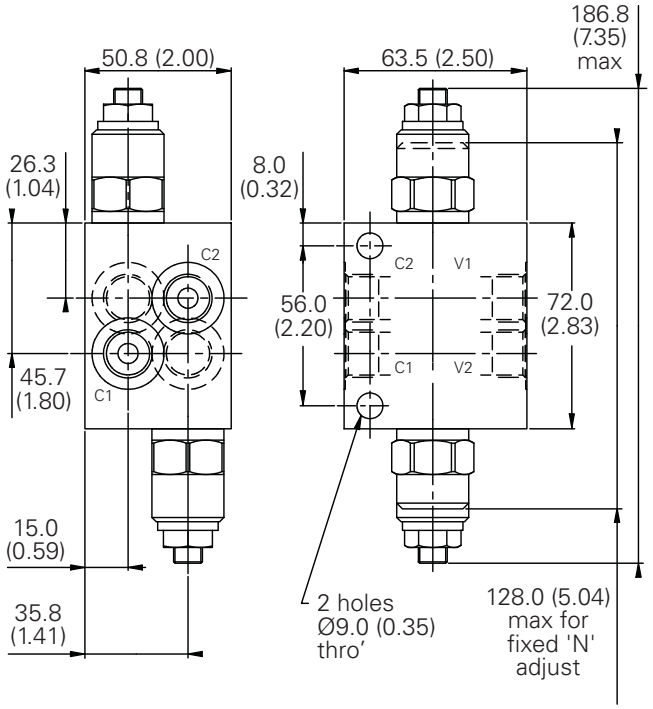

F

Where measurements are critical request certified drawings. We reserve the right to change specifications without notice.

1CE90 - Overcenter valve

Pilot assisted relief with check
90 L/min (23 USgpm) • 270 bar (4000 psi)

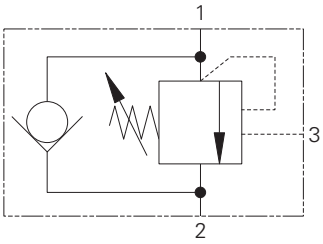

Sectional view

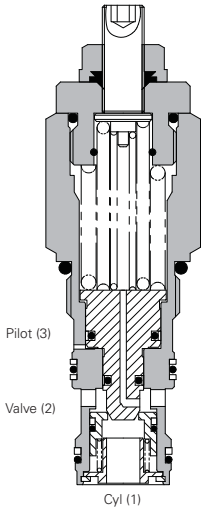

Description

Overcenter valves give static and dynamic control of loads by regulating the flow into and out of hydraulic actuators. When installed close to or within an actuator, the overcenter valve will stop runaway in the event of hose burst and if open center directional control valves are used, will allow thermal expansion relief of the hydraulic fluid.

The overcenter cartridge is ideal for mounting directly into a cavity machined in the body of the cylinder, motor or rotary actuator. The cartridge can also be mounted directly to the ports via a specifically machined body as part of a Hydraulic Integrated Circuit or single unit, or contained within one of our standard line bodies.

Single overcenter valves are normally used when the load is unidirectional, for example an aerial platform or crane and dual overcenter valves are used for controlling loads in both directional for motor applications or for cylinders going over center.

Operation

The check section allows free flow into the actuator then holds and locks the load against movement. The pilot assisted relief valve section will give controlled movement when pilot pressure is applied. The relief section is normally set to open at a pressure at least 1.3 times the maximum load induced pressure but the pressure required to open the valve and allow movement depends on the pilot ratio of the valve. For optimization of load control and energy usage, a choice of pilot ratios is available.

The pressure required to open the valve and start actuator movement can be calculated as follows:

$$\text{Pilot Pressure} = \frac{\text{(Relief Setting) - (Load Pressure)}}{\text{Pilot Ratio}}$$

Features

Cartridge is economical and fits simple cavity. Allows quick, easy field service - reduces down time. Interchangeable with pilot check valve of a similar size.

Pilot ratio

4:1 Best suited for applications where load varies and machine structure can induce instability.

8:1 Best suited for applications where the load remains relatively constant.

Performance data

Ratings and specifications

Figures based on: Oil Temp = 40°C Viscosity = 32 cSt (150 SUS)	
Rated flow	90 L/min (23 USgpm)
Max relief setting	350 bar (5000 psi).
Max load Induced pressure	270 bar (4000 psi).
Cartridge material	Working parts hardened and ground steel. External surfaces zinc plated.
Standard housing materials	Aluminum (up to 210 bar). Add suffix "377" for steel option.
Mounting position	Unrestricted
Cavity number	A12336 (See Section M)
Torque cartridge into cavity	60 Nm (44 lbs ft)
Weight	1CE90 0.29 kg (0.63 lbs) 1CE95 1.35 kg (2.97 lbs) 1CEE95 2.10 kg (4.62 lbs)
Seal kit number	SK633 (Nitrile) SK633V (Viton®)
Recommended filtration level	BS5540/4 Class 18/13 (25 micron nominal)
Operating temperature	-30° to +90°C (-22° to +194°F)
Leakage	0.3 milliliters/min nominal (5 dpm)
Nominal viscosity range	5 to 500 cSt

Viton is a registered trademark of E.I. DuPont.

Pressure drop

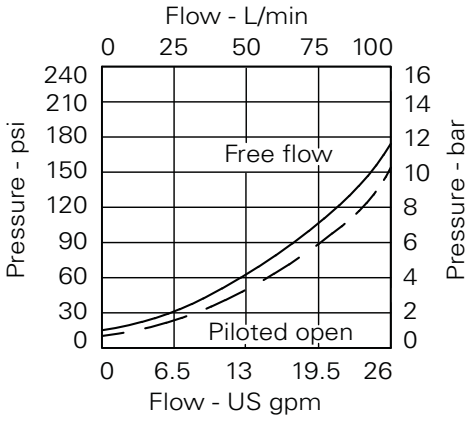

4:1 Version

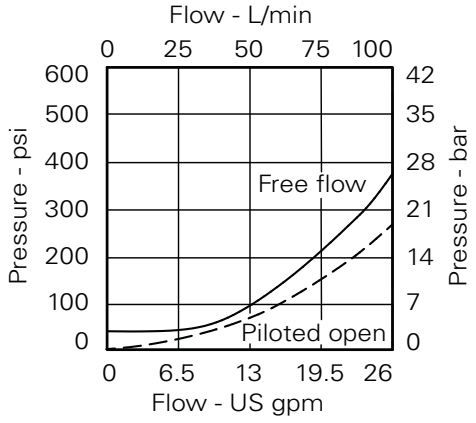

8:1 Version

Where measurements are critical request certified drawings. We reserve the right to change specifications without notice.

Model code

1CE*– F 4W – 35 S 4**

1 2 3 4 5 6

1 Function

1CE90 - Cartridge Only

1CE95 - Cartridge and Body

1CEE95 - Cartridges and Dual Body

2 Adjustment means

F - Screw Adjustment

N - Fixed - State pressure setting required.

For fixed versions add setting in 10 bar increments to end of part number. Subject to a ±10% tolerance.

3 Port Sizes

Code	Port size	Housing number - body only			
Body only		**Aluminum single**	**Steel single**	**Aluminum dual**	**Steel dual**
4W	1/2" BSP Valve & Cyl Port 1/4" BSP Pilot Port	B13625	B13626	C13627	C13628
8T	1/2" SAE Valve & Cyl Port 1/4" SAE Pilot Port	B10806	B10922	C10807	C11561

4 Pressure range @ 4.8 l/min

Note: Code based on pressure in bar.

20 - 70-225 bar.
Std setting 100 bar

35 - 200-350 bar.
Std setting 210 bar

Std setting made at 4.8 L/min

5 Seals

S - Nitrile (For use with most industrial hydraulic oils)

SV - Viton (For high temperature and most special fluid applications)

6 Pilot Ratio

4 - 4:1

8 - 8:1

Other ratios available upon request

Dimensions

mm (inch)

Cartridge only
Basic Code
1CE90

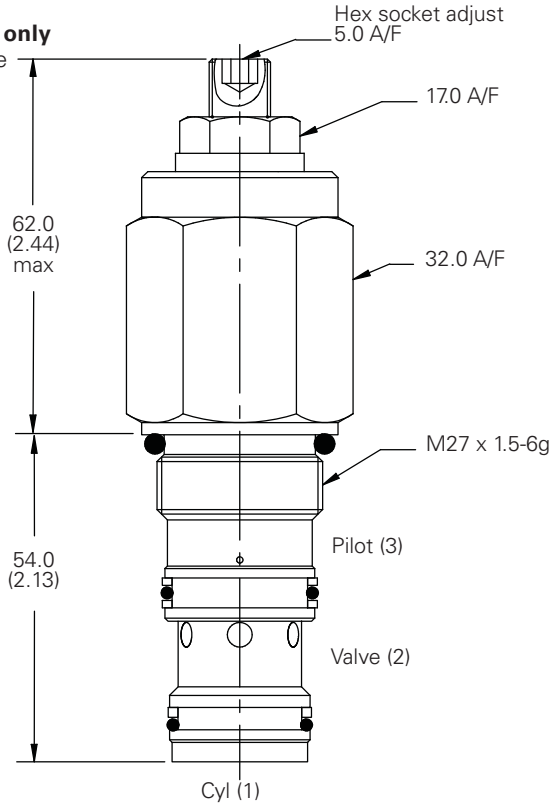

Single valve
1/2" Ports
Basic Code
1CE95

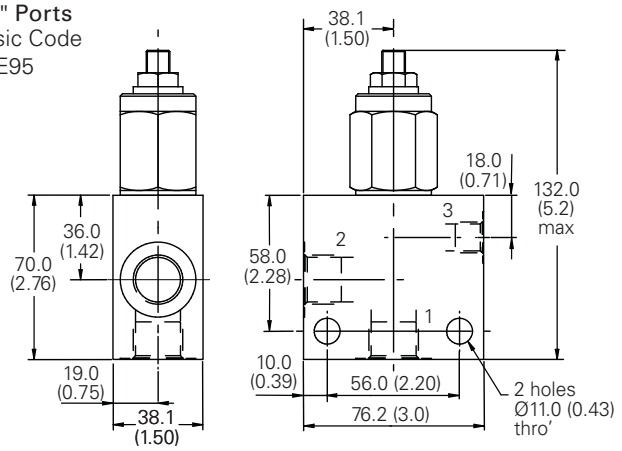

Dual valve
1/2" Ports
Basic Code 1CEE95
Internally Cross Piloted

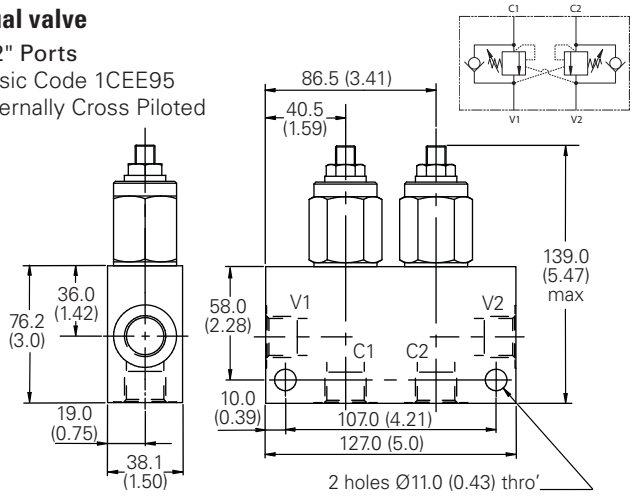

Note: For applications above 210 bar - please consult our technical department or use the steel body option

Note: Tightening torque of "F" adjuster locknut - 20 to 25 Nm

Where measurements are critical request certified drawings. We reserve the right to change specifications without notice.

1CEH90 - High pressure overcenter valve

Pilot assisted relief with check
90 L/min (23 USgpm) • 350 bar (5000 psi)

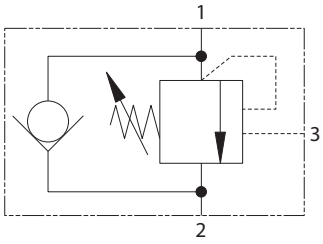

Sectional view

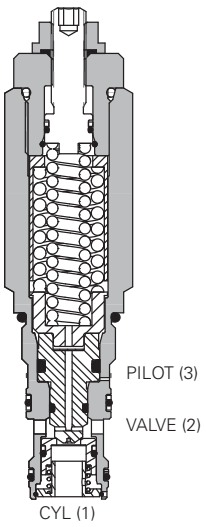

Description

Overcenter valves give static and dynamic control of loads by regulating the flow into and out of hydraulic actuators. When installed close to or within an actuator, the overcente valve will stop runaway in the event of hose burst and if open center directional control valves are used, will allow thermal expansion relief of the hydraulic fluid.

The overcenter cartridge is ideal for mounting directly into a cavity machined in the body of the cylinder, motor or rotary actuator. The cartridge can also be mounted directly to the ports via a specifically machined body as part of a Hydraulic Integrated Circuit or single unit, or contained within one of our standard line bodies.

Single overcenter valves are normally used when the load is unidirectional, for example an aerial platform or crane and dual overcenter valves are used for controlling loads in both directional for motor applications or for cylinders going over center.

Operation

The check section allows free flow into the actuator then holds and locks the load against movement. The pilot assisted relief valve section will give controlled movement when pilot pressure is applied. The relief section is normally set to open at a pressure at least 1.3 times the maximum load induced pressure but the pressure required to open the valve and allow movement depends on the pilot ratio of the valve. For optimization of load control and energy usage, a choice of pilot ratios is available.

The pressure required to open the valve and start actuator movement can be calculated as follows:

$$\text{Pilot Pressure} = \frac{\text{(Relief Setting) - (Load Pressure)}}{\text{Pilot Ratio}}$$

Features

Cartridge is economical and fits simple cavity. Allows quick, easy field service - reduces down time. Interchangeable with pilot check valve of a similar size.

Dynamic seals on the internal moving parts to provide longer fatigue life.

Pilot ratio

4:1 Best suited for applications where load varies and machine structure can induce instability.

Performance data

Ratings and specifications

Figures based on: Oil Temp = 40°C Viscosity = 32 cSt (150 SUS)	
Rated flow	90 L/min (23 USgpm)
Max relief setting	430 bar (6240 psi).
Max load Induced pressure	350 bar (5000 psi).
Cartridge material	Working parts hardened and ground steel. External surfaces zinc plated.
Standard housing materials	Steel. Add suffix "377" for steel option.
Mounting position	Unrestricted
Cavity number	A12336 (See Section M)
Torque cartridge into cavity	100-110 Nm (73-81 lbs ft)
Weight	1CEH90 0.6 kg (1.32 lbs) 1CEH95 1.66 kg (3.66 lbs) 1CEEH95 2.72 kg (6.00 lbs)
Seal kit number	9900927-000 (Nitrile) 9900928-000 (Viton®)
Recommended filtration level	BS5540/4 Class 18/13 (25 micron nominal)
Operating temperature	-30° to +90°C (-22° to +194°F)
Leakage	5 dpm @ 85% of Cracking
Nominal viscosity range	5 to 500 cSt

Viton is a registered trademark of E.I. DuPont.

Pressure drop

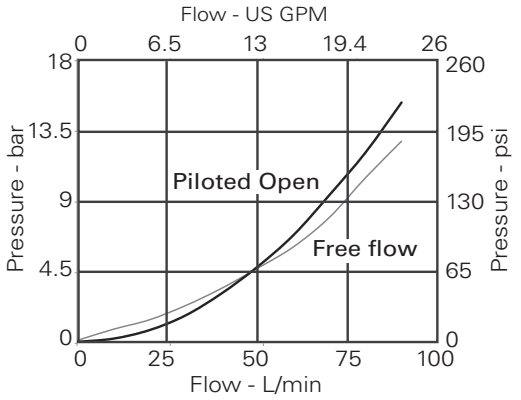

4:1 Version

Where measurements are critical request certified drawings. We reserve the right to change specifications without notice.

1CEH90 - High pressure overcenter valve

Pilot assisted relief with check
90 L/min (23 USgpm) • 350 bar (5000 psi)

Model code

1CEH* – F 4W – 43 S 4**

1 2 3 4 5 6

1 Function

1CEH90 - Cartridge Only

1CEH95 - Cartridge and Body

1CEEH95 - Cartridges and Dual Body

2 Adjustment means

F - Screw Adjustment

3 Port sizes

Code	Port size	Housing number - body only	
		Steel single	Steel dual
4W	1/2" BSP Valve & Cyl Port 1/4" BSP Pilot Port	B13626	C13628
8T	1/2" SAE Valve & Cyl Port 1/4" SAE Pilot Port	B10922	C11561

4 Pressure range

Note: Code based on pressure in bar.

43 - (4:1) 275 - 430 bar. Std setting 350 bar

Std setting made at 1 L/min

Note: Contact CSR for special pressure setting requirement

Note: Co Tightening torque of "F" adjuster locknut - 20 to 25 Nm

5 Seals

S - Nitrile (For use with most industrial hydraulic oils)

SV - Viton (For high temperature and most special fluid applications)

6 Pilot Ratio

4 - 4:1

Other ratios available upon request

Dimensions

mm (inch)

Cartridge only
Basic Code
1CEH90

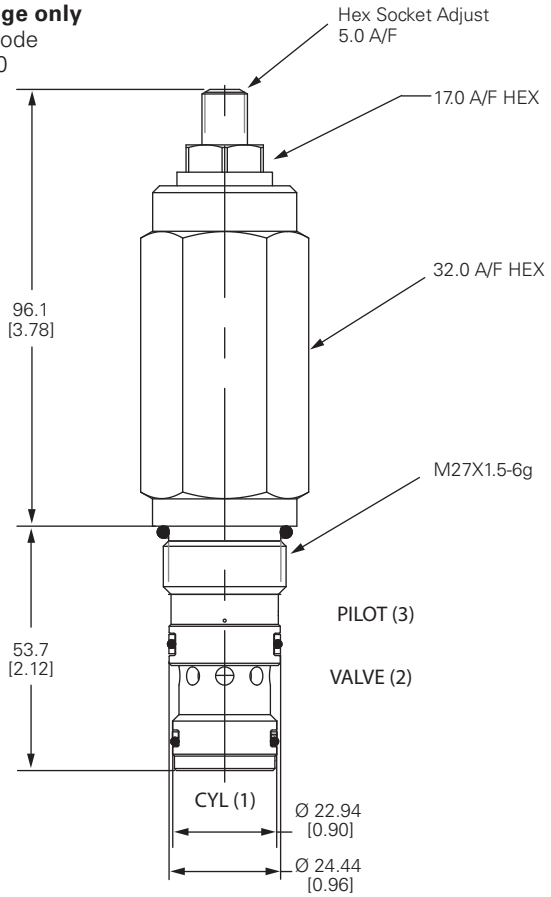

Single valve
1/2" Ports
Basic Code
1CEH95

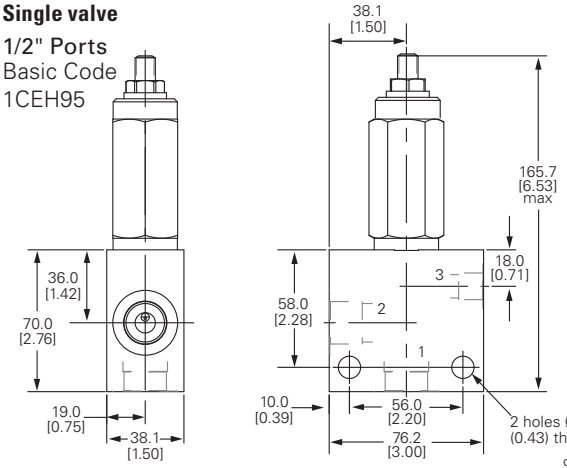

Dual valve
1/2" Ports
Basic Code 1CEEH95
Internally Cross Piloted

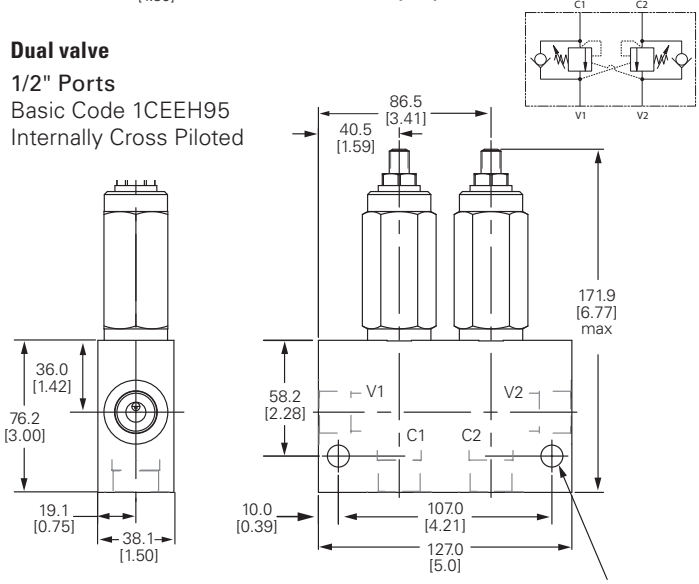

Where measurements are critical request certified drawings. We reserve the right to change specifications without notice.

F

1CER90 - Overcenter valve

Part balanced, pilot assisted relief with check
90 L/min (23 USgpm) • 270 bar (4000 psi)

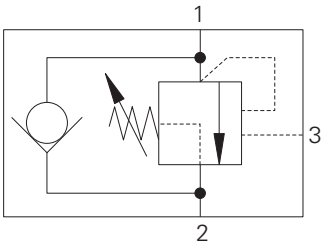

Sectional view

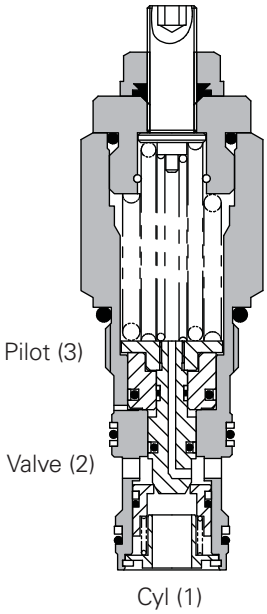

Description

The 1CER series overcenter valve performs all duties of a regular overcenter but is able to relieve and stay open irrespective of downstream pressure. This enables the valve to operate when used with a closed center directional valve which has service line reliefs. The poppet is pressure balanced, preventing relief setting increase due to back pressure.

Operation

The check section allows free flow into the actuator then holds and locks the load against movement. The pilot assisted relief valve section will give controlled movement when pilot pressure is applied. The relief section is normally set to open at a pressure at least 1.3 times the maximum load induced pressure but the pressure required to open the valve and allow movement depends on the pilot ratio of the valve. For optimization of load control and energy usage, a choice of pilot ratios is available.

The pressure required to open the valve and start actuator movement can be calculated as follows:

$$\text{Pilot Pressure} = \frac{\text{(Relief Setting) - (Load Pressure)}}{\text{Pilot Ratio}}$$

Features

Cartridge is economical and fits simple cavity. Allows quick, easy field service - reduces down time. Interchangeable with pilot check valve of a similar size.

Pilot ratio

4:1 Best suited for applications where load varies and machine structure can induce instability.

Other ratios available upon request.

Performance data

Ratings and specifications

Figures based on: Oil Temp = 40°C Viscosity = 32 cSt (150 SUS)	
Rated flow	90 L/min (23 USgpm)
Max relief pressure	350 bar (5000 psi)
Max load induced pressure	270 bar (4000 psi)
Cartridge material	Working parts hardened and ground steel. External surfaces zinc plated.
Standard housing materials	Aluminum up to 210 bar. Add suffix "377" for steel option.
Cavity	A12336 (see Section M)
Mounting position	Unrestricted
Torque cartridge into cavity	60 Nm (44 lbs ft)
Weight	1CER90 29 kg (.63 lbs) 1CER95 1.35 kg (2.97 lbs) 1CEER95 2.10 kg (4.62 lbs)
Seal kit	SK633 (Nitrile) SK633V (Viton®)
Filtration	BS5540/4 Class 18/13 (25 micron nominal)
Temperature range	-30° to +90°C (-22° to +194°F)
Internal leakage	0.3 ml/min (5 dpm)
Nominal viscosity range	5 to 500 cSt

Viton is a registered trademark of E.I. DuPont.

Pressure drop

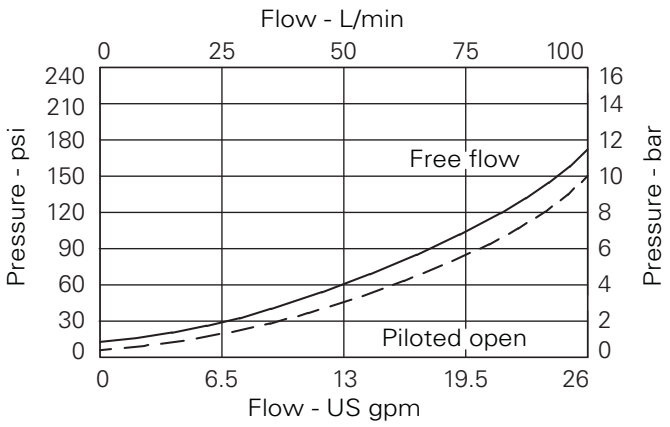

Where measurements are critical request certified drawings. We reserve the right to change specifications without notice.

Part balanced, pilot assisted relief with check
90 L/min (23 USgpm) • 270 bar (4000 psi)

Model code

1CE****	–	F	4W	– 35	S	4
1		2	3	4	5	6

1 Function

1CER90 - Cartridge only

1CER95 - Cartridge and body

1CEER95 - Cartridges and body

2 Adjustment

F - Screw adjustment

N - Fixed - State pressure setting required.

For fixed versions add setting in 10 bar increments to end of part number. Subject to a +/-10% tolerance.

3 Port size

Code	Port size	Housing number - body only			
		Aluminum single	Steel single	Aluminum dual	Steel dual
4W	1/2" BSP Valve & Cyl Port 1/4" BSP Pilot Port	B13625	B13626	C13627	C13628
8T	1/2" SAE Valve & Cyl Port 1/4" SAE Pilot Port	B10806	B10922	C10807	C11561

4 Pressure range @ 4.8 L/min

Note: Code based on pressure in bar.

20 - 70-225 bar. Std setting 100 bar

35 - 200-350 bar. Std setting 210 bar

Std setting made at 4.8 L/min

5 Seal material

S - Nitrile (For use with most industrial hydraulic oils)

SV - Viton (For high temperature and most special fluid applications)

6 Pilot ratio

4 - 4:1 Other ratios available upon request

Dimensions

mm (inch)

Cartridge only
Basic Code
1CER90

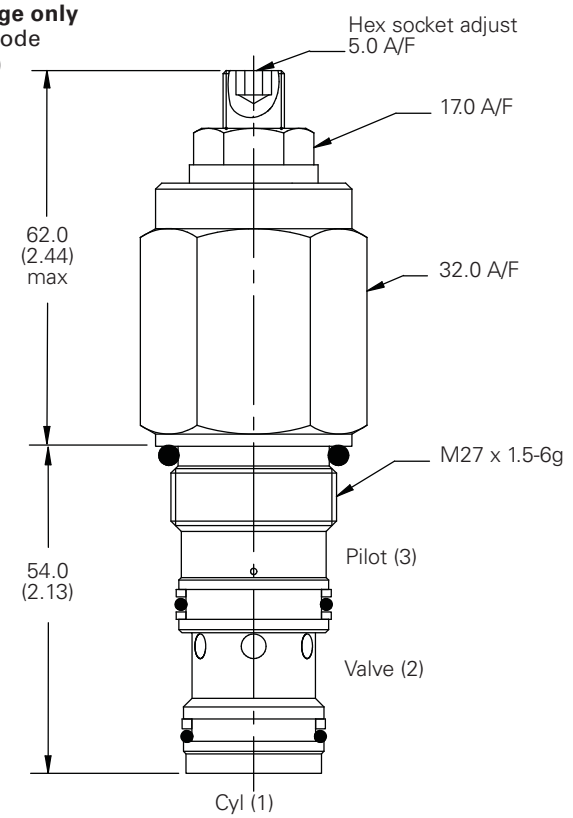

Note: For applications above 210 bar - please consult our technical department or use the steel body option.

Note: Tightening torque of "F" adjuster locknut - 20 to 25 Nm.

Single valve
1/2" Ports
Basic Code
1CER95

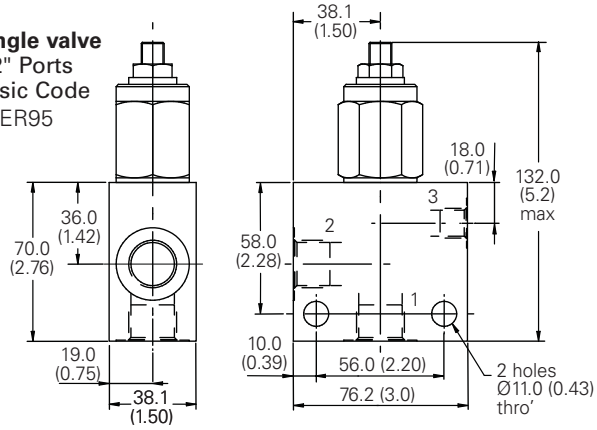

Dual valve
1/2" Ports
Basic Code 1CEER95
Internally Cross Piloted

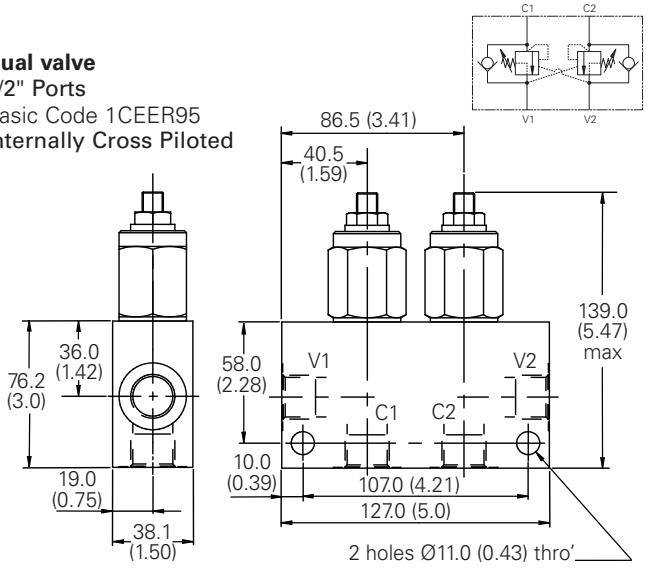

Where measurements are critical request certified drawings. We reserve the right to change specifications without notice.

F

1CERH90 - High pressure overcenter valve

Part balanced, pilot assisted relief with check
90 L/min (23 USgpm) • 350 bar (5000 psi)

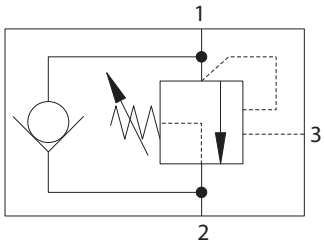

Sectional view

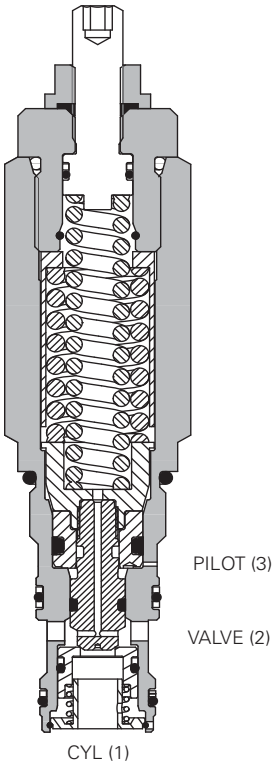

Description

The 1CERH series overcenter valve performs all duties of a regular overcenter but is able to relieve and stay open irrespective of downstream pressure. This enables the valve to operate when used with a closed center directional valve which has service line reliefs. The poppet is pressure balanced, preventing relief setting increase due to back pressure.

Operation

The check section allows free flow into the actuator then holds and locks the load against movement. The pilot assisted relief valve section will give controlled movement when pilot pressure is applied. The relief section is normally set to open at a pressure at least 1.3 times the maximum load induced pressure but the pressure required to open the valve and allow movement depends on the pilot ratio of the valve. For optimization of load control and energy usage, a choice of pilot ratios is available.

The pressure required to open the valve and start actuator movement can be calculated as follows:

$$\text{Pilot Pressure} = \frac{\text{(Relief Setting) - (Load Pressure)}}{\text{Pilot Ratio}}$$

Features

Cartridge is economical and fits simple cavity. Allows quick, easy field service - reduces down time. Interchangeable with pilot check valve of a similar size.

Dynamic seals on the internal moving parts to provide longer fatigue life.

Pilot ratio

4:1 Best suited for applications where load varies and machine structure can induce instability.

Other ratios available upon request.

Performance data

Ratings and specifications

Figures based on: Oil Temp = 40°C Viscosity = 32 cSt (150 SUS)	
Rated flow	90 L/min (23 USgpm)
Max relief pressure	430 bar (6240 psi)
Max load induced pressure	350 bar (5000 psi)
Cartridge material	Working parts hardened and ground steel. External surfaces zinc plated.
Standard housing materials	Steel. Add suffix "377".
Cavity	A12336 (see Section M)
Mounting position	Unrestricted
Torque cartridge into cavity	100-110 Nm (73-81lbs ft)
Weight	1CERH90 0.6 kg (1.32 lbs) 1CERH95 1.66 kg (3.66 lbs) 1CEERH95 2.72 kg (6.00 lbs)
Seal kit	9900927-000 (Nitrile) 9900928-000 (Viton®)
Filtration	BS5540/4 Class 18/13 (25 micron nominal)
Temperature range	-30° to +90°C (-22° to +194°F)
Internal leakage	5 dpm @ 85% of Cracking
Nominal viscosity range	5 to 500 cSt

Viton is a registered trademark of E.I. DuPont.

Pressure drop

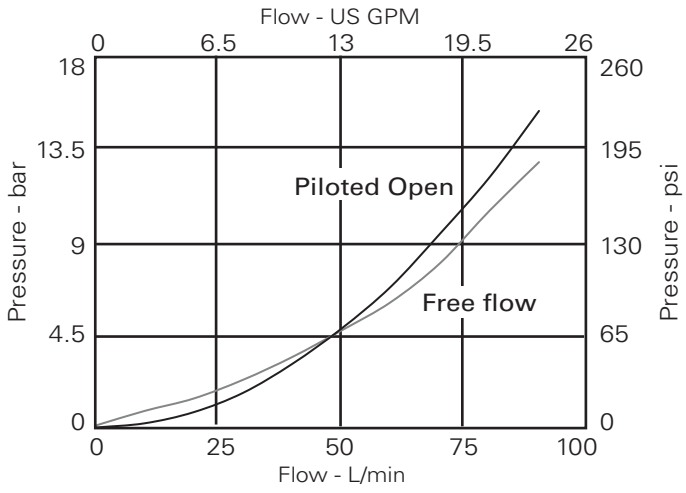

Where measurements are critical request certified drawings. We reserve the right to change specifications without notice.

1CERH90 - High pressure overcenter valve

Part balanced, pilot assisted relief with check
90 L/min (23 USgpm) • 350 bar (5000 psi)

Model code

1CERH* – F 4W – 43 S 4**

1 2 3 4 5 6

1 Function

1CERH90 - Cartridge only

1CERH95 - Cartridge and body

1CEERH95 - Cartridges and body

2 Adjustment

F - Screw adjustment

3 Port size

Code	Port size	Housing number - body only	
		Steel single	Steel dual
4W	1/2" BSP Valve & Cyl Port 1/4" BSP Pilot Port	B13626	C13628
8T	1/2" SAE Valve & Cyl Port 1/4" SAE Pilot Port	B10922	C11561

4 Pressure range

Note: Code based on pressure in bar.

43 - (4:1) 275-430 bar. Std setting 350 bar

Std setting made at 1L/min

Note: Contact CSR for special pressure setting requirement

Note: Note: Tightening torque of "F" adjuster locknut - 20 to 25 Nm

5 Seal material

S - Nitrile (For use with most industrial hydraulic oils)

SV - Viton (For high temperature and most special fluid applications)

6 Pilot ratio

4 - 4:1 Other ratios available upon request

Dimensions

mm (inch)

Cartridge only
Basic Code
1CERH90

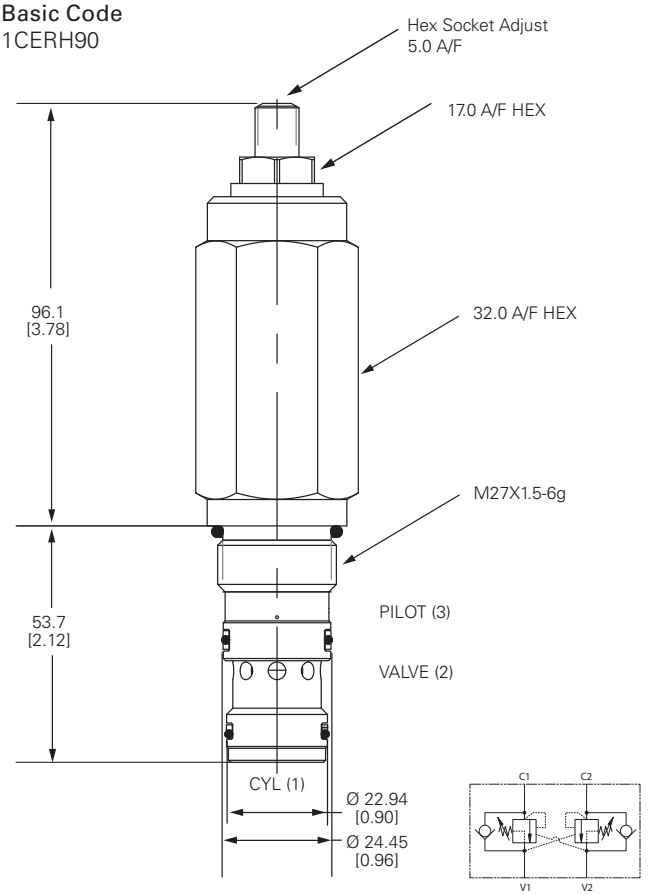

Single valve
1/2" Ports
Basic Code
1CERH95

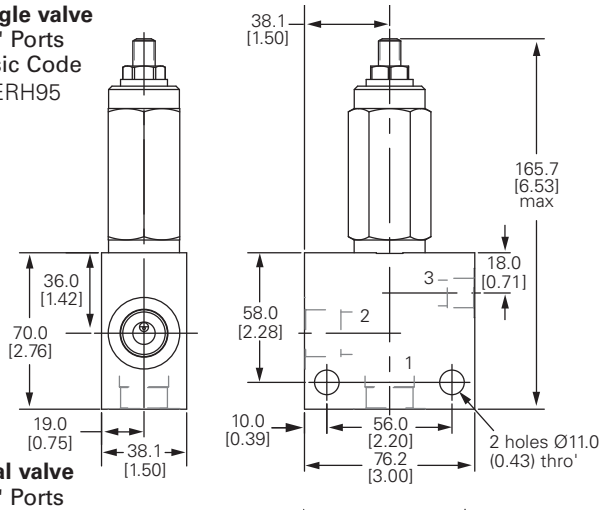

Dual valve
1/2" Ports
Basic Code 1CEERH95
Internally
Cross Piloted

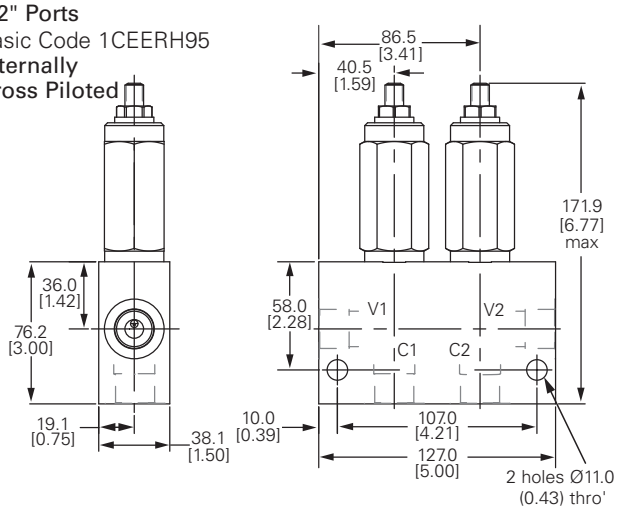

Where measurements are critical request certified drawings. We reserve the right to change specifications without notice.

F

1CEB90 - Overcenter valve

Fully balanced, pilot assisted relief with check
90 L/min (23 USgpm) • 270 bar (4000 psi)

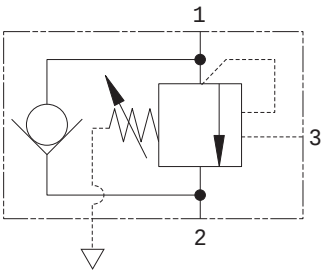

Operation

The check section allows free flow into the actuator then holds and locks the load against movement. The pilot assisted relief valve section will give controlled movement when pilot pressure is applied. The relief section is normally set to open at a pressure at least 1.3 times the maximum load induced pressure but the pressure required to open the valve and allow movement depends on the pilot ratio of the valve. For optimization of load control and energy usage, a choice of pilot ratios is available.

The pressure required to open the valve and start actuator movement can be calculated as follows:

$$\text{Pilot Pressure} = \frac{\text{(Relief Setting) - (Load Pressure)}}{\text{Pilot Ratio}}$$

Features

Cartridge is economical and fits simple cavity. Allows quick, easy field service - reduces down time. Interchangeable with pilot check valve of a similar size.

Pilot ratio

4:1 Best suited for applications where load varies and machine structure can induce instability.

Other ratios available upon request.

Sectional view

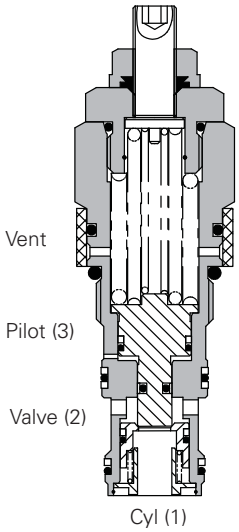

Description

Overcenter valves give static and dynamic control of loads by supplying a counterbalance pressure to the actuator. They prevent runaway in the event of hose burst and hold the load with minimal leakage.

The pressure balanced valve is unaffected by back pressure, allowing service line reliefs to operate and for the valve to be used in regenerative or proportional valve systems.

The overcenter valve should be mounted either into, onto or as close to the actuator as possible to give maximum protection.

Single overcenter valves control unidirectional loads such as in aerial platforms, cranes or winches and dual overcenters are suited to bi-directional motion such as wheel motor applications or cylinders going over center.

Performance data

Ratings and specifications

Performance data is typical with fluid at 32 cST (150 SUS)	
Rated flow	90 L/min (23 USgpm)
Max relief pressure	350 bar (5000 psi)
Max load induced pressure	270 bar (4000 psi)
Cartridge material	Working parts steel. External surfaces zinc plated.
Standard housing materials	Aluminum up to 210 bar. Add suffix "377" for steel option.
Mounting position	Unrestricted
Cavity	A12336 (see Section M)
Torque cartridge into cavity	60 Nm (44 lbs ft)
Weight	1CEB90: .29 kg (.63 lbs) 1CEB95: 1.35 kg (2.97 lbs) 1CEEB95: 2.10 kg (4.62 lbs)
Seal kit	SK634 (Nitrile) SK634V (Viton®)
Filtration	BS5540/4 Class 18/13 (25 micron nominal)
Temperature range	-30° to +90°C (-22° to +194°F)
Internal leakage	0.3 ml/min (5 dpm)
Nominal viscosity range	5 to 500 cSt

Viton is a registered trademark of E.I. DuPont.

Pressure drop

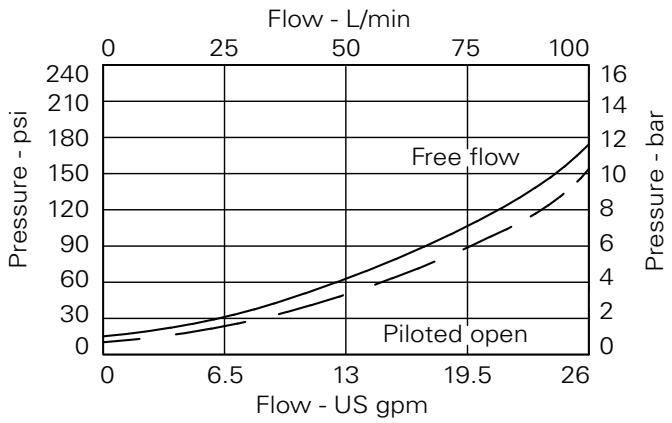

Where measurements are critical request certified drawings. We reserve the right to change specifications without notice.

Model code

1CE** – F 4W – 35 S 4**

1 2 3 4 5 6

1 Function

1CEB90 - Cartridge only

1CEB95 - Cartridge and body

1CEEB95 - Cartridges and dual body

2 Adjustment

F - Screw adjustment

N - Fixed - State pressure setting required.

For fixed versions add setting in 10 bar increments to end of part number. Subject to a ±10% tolerance.

3 Port size

Code	Port Size	Housing number - body only			
Body Only		**Aluminium single**	**Steel single**	**Aluminium dual**	**Steel dual**
4W	1/2" BSP Valve & Cyl Port 1/4" BSP Pilot Port	B13625	B13626	C13627	C13628
8T	1/2" SAE Valve & Cyl Port 1/4" SAE Pilot Port	B10806	B10922	C10807	C11561

4 Pressure range @ 4.8 L/min

Note: Code based on pressure in bar.

20 - 70-225 bar. Std setting 100 bar

35 - 200-350 bar. Std setting 210 bar

Std setting made at 4.8 L/min

5 Seal material

S - Nitrile (For use with most industrial hydraulic oils)

SV - Viton (For high temperature and most special fluid applications)

6 Pilot ratio

4 - 4:1 Other ratios available upon request

Dimensions

mm (inch)

Cartridge only
Basic Code
1CEB90

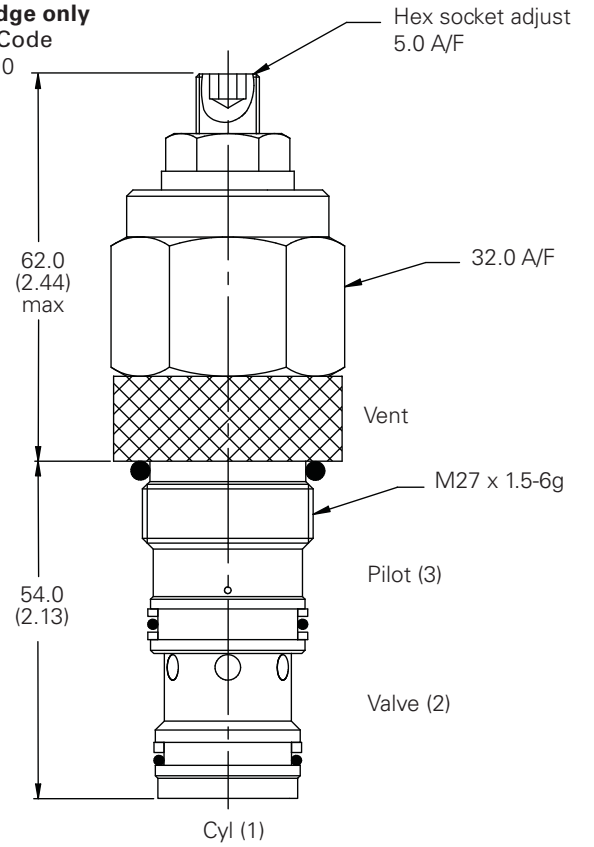

Note: Tightening torque of "F" adjuster locknut - 20 to 25 Nm.

Note: For applications above 210 bar - please consult our technical department or use the steel body option.

Single valve
1/2" Ports
Basic Code
1CEB95

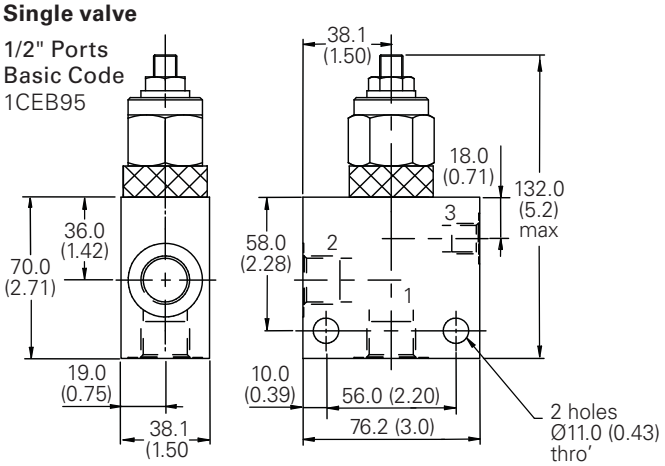

Dual valve
1/2" Ports
Basic Code 1CEEB95
Internally Cross Piloted

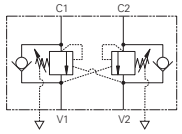

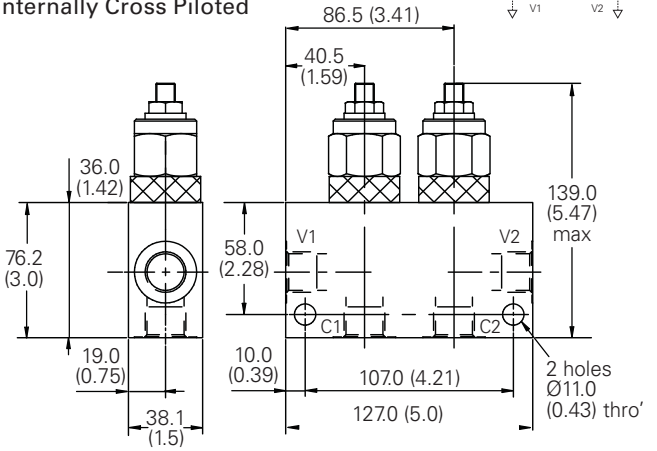

Where measurements are critical request certified drawings. We reserve the right to change specifications without notice.

1CEBD90 - Overcenter valve

Fully balanced, pilot assisted relief with check
90 L/min (23 USgpm) • 270 bar (4000 psi)

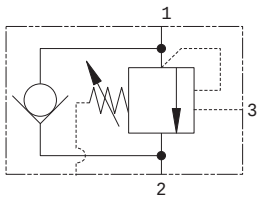

Sectional view

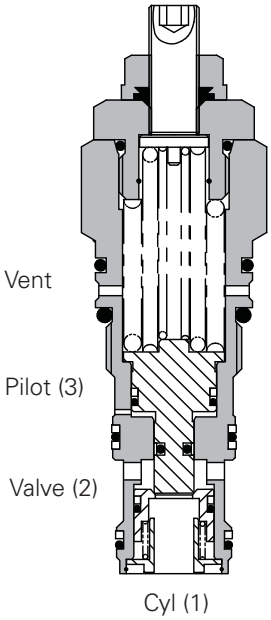

Description

Overcenter valves give static and dynamic control of loads by supplying a counterbalance pressure to the actuator. They will stop runaway in the event of hose burst and hold the load with minimal leakage.

The pressure balanced overcenter relief setting is unaffected by back pressure, enabling the valve to stay open when the valve port pressure rises. This will allow service line reliefs to work normally and will also allow the control of regenerative or proportional systems. The drain line allows the valve to be used in corrosive atmospheres preventing the ingress of atmospheric contaminant.

Single overcenter valves are normally used when the load is unidirectional, for example an aerial platform or crane and dual overcenter valves are used for controlling loads in both directional for motor applications or for cylinders going over center.

Operation

The check section allows free flow into the actuator then holds and locks the load against movement. The pilot assisted relief valve section will give controlled movement when pilot pressure is applied. The relief section is normally set to open at a pressure at least 1.3 times the maximum load induced pressure but the pressure required to open the valve and allow movement depends on the pilot ratio of the valve. For optimization of load control and energy usage, a choice of pilot ratios is available.

The pressure required to open the valve and start actuator movement can be calculated as follows:

$$\text{Pilot Pressure} = \frac{\text{(Relief Setting) - (Load Pressure)}}{\text{Pilot Ratio}}$$

Features

Cartridge is economical and fits simple cavity. Allows quick, easy field service - reduces down time.

Pilot ratio

4:1 Best suited for applications where load varies and machine structure can induce instability.

Other ratios available upon request.

Performance data

Ratings and specifications

Figures based on Oil Temp = 40˚C Viscosity = 32 cSt (150 SUS)	
Rated flow	90 L/min (23 USgpm)
Max relief setting	350 bar (5000 psi)
Max load induced pressure	270 bar (4000 psi)
Cartridge material	Working parts hardened and ground steel. External surfaces zinc plated.
Mounting position	Unrestricted
Cavity	A12196 (See section M)
Torque cartridge into cavity	60 Nm (44 lbs ft)
Weight	0.29 kg (0.63 lbs)
Seal kit	SK634 (Nitrile) SK634V (Viton®) SK634P (Polyurethane/Nitrile)
Filtration	BS5540/4 Class 18/13 (25 micron nominal)
Temperature range	-30° to +90°C (-22° to +194°F)
Leakage	0.3 milliliters/min (5 dpm)
Nominal viscosity range	5 to 500 cSt

Viton is a registered trademark of E.I. DuPont.

Pressure drop

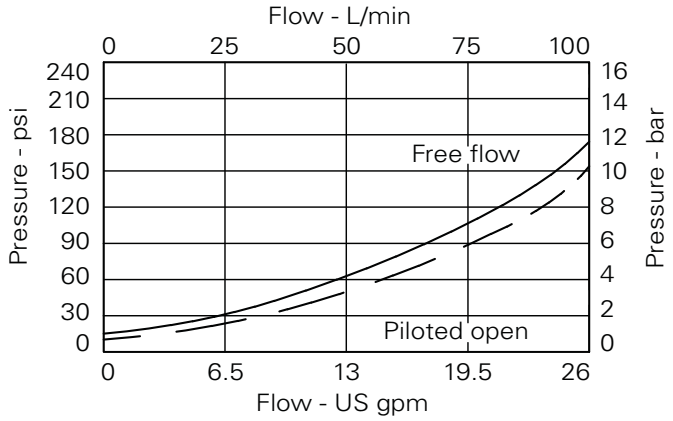

Where measurements are critical request certified drawings. We reserve the right to change specifications without notice.

Fully balanced, pilot assisted relief with check
90 L/min (23 USgpm) • 270 bar (4000 psi)

Model Code

1CEBD90 – F – ** P 4

1 2 3 4 5

1 Function
1CEBD90

2 Adjustment means
F - Screw adjustment

Line body available on request.

3 Pressure range @ 4.8 L/min

Note: Code based on pressure in bar.

20 - 70-225 bar
Standard setting 100 bar

35 - 200-350 bar
Standard setting 210 bar

Standard setting made at 4.8 L/min

4 Seals

S - Nitrile (for use with most industrial hydraulic oils)

SV - Viton (for high temperature and most special fluid applications)

P - Polyurethane/Nitrile (for arduous applications)

5 Pilot ratio

4 - 4:1 Other ratios available upon request

Dimensions

mm (inch)

Cartridge only
Basic Code
1CEBD90

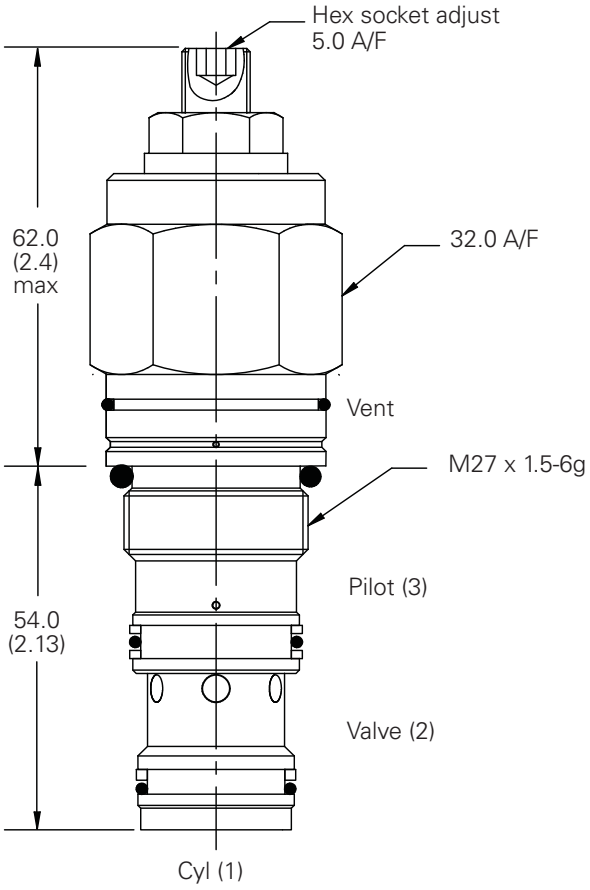

Note: Tightening torque of "F" adjuster locknut - 20 to 25 Nm

F

Where measurements are critical request certified drawings. We reserve the right to change specifications without notice.

1CEL90 - Overcenter valve

Counterbalance, pilot assisted relief with check
90 L/min (23 USgpm) • 280 bar (4000 psi)

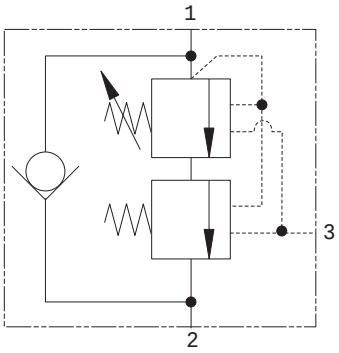

Operation

The check section allows free flow and then locks the load against movement. The pilot assisted relief valve section will give controlled movement when pilot pressure is applied, maintaining a counterbalance pressure to prevent initial pressure loss and therefore instability. The total pressure setting will normally be set at 1.3 times the load induced pressure. The counterbalance pressure reduces as the pilot pressure increases.

Features

Cartridge is economical and fits simple cavity. Allows quick, easy field service - reduces down time. Interchangeable with pilot check valve of a similar size.

Pilot ratio

Primary 5.6:1

Secondary 0.7:1

Sectional view

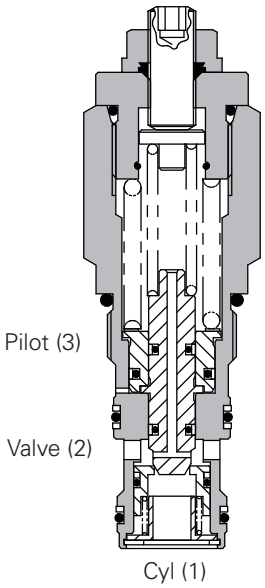

Performance data

Ratings and specifications

Figures based on: Oil Temp = 40°C Viscosity = 32 cSt (150 SUS)	
Rated flow	90 L/min (23 USgpm)
Maximum setting	1SEL30
Max load induced pressure	280 bar (4000 psi)
Cartridge material	Working parts hardened and ground steel. External surfaces zinc plated.
Standard housing material	Aluminum (up to 210 bar). Add suffix "377" for steel option.
Mounting position	Unrestricted
Cavity number	A12336 (See Section M)
Torque cartridge into cavity	60 Nm (44 ft. lbs.)
Weight	1CEL90 0.29 kg (0.63 lbs.) 1CEL95 1.35 kg (2.97 lbs.) 1CEEL95 2.10 kg (4.62 lbs.)
Seal kit number	SK633 (Nitrile) SK633V (Viton®)
Recommended filtration level	BS5540/4 Class 18/13 (25 micron nominal)
Operating temperature	-30° C to +90° C (-22° to +194°F)
Internal leakage	0.3 milliliters/min nominal (5 dpm)
Nominal viscosity range	5 to 500 cSt

Viton is a registered trademark of E.I. DuPont.

Description

The 1CEL overcenter valve performs all duties of a regular overcenter but maintains a counterbalance pressure to provide dampening of cylinders when there is a rapid loss in stored pressure. This counterbalance pressure reduces as the pilot pressure increases. Typical applications include extension cylinders on telescopic handlers where it is important to have a smooth operation when retracting from full extension.

Pressure drop

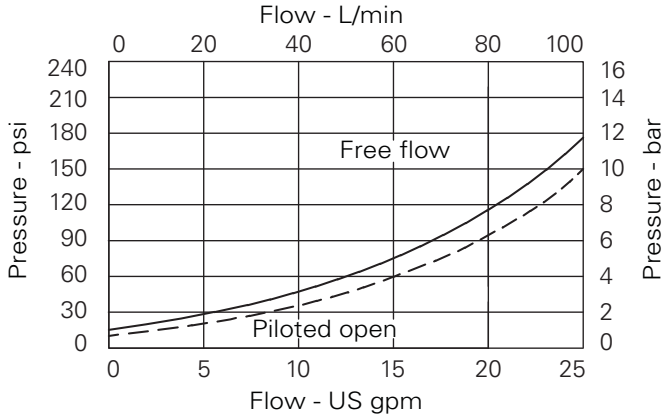

Note: This valve has been designed to eliminate instability from flexible boom applications or where the load induced pressure varies greatly. To get the best results, the settings should be adjusted for each application and then factory set for production quantities. Please contact our Technical Department for more information.

Where measurements are critical request certified drawings. We reserve the right to change specifications without notice.

Model code

1CE* – F 4W – 30 S 220 / 60**

1 2 3 4 5 6 7

1 Function

1CEL90 - Cartridge Only

1CEL95 - Cartridge and Body

1CEEL95 - Cartridges and Dual Body

2 Adjustment means counterbalance setting

F - Screw Adjustment
N - Fixed - State pressure setting required.

For fixed versions add setting in 10 bar increments to end of part number. Subject to a ±10% tolerance.

3 Port sizes

Code	Port Size	Housing Number - Body Only			
		Aluminium single	Steel Single	Aluminium dual	Steel dual
4W	1/2" BSP Valve & Cyl Port 1/4" BSP Pilot Port	B13625	B13626	C13627	C13628
8T	1/2" SAE Valve & Cyl Port 1/4" SAE Pilot Port	B10806	B10922	C10807	C11561

4 Pressure range bar @ 4.8 L/min

Note: Code based on pressure in bar.

20 - 170-350 Standard 220 (160/60)

30 - 210-380 Standard 280 (220/60).
Standard setting made at 4.8 L/min

5 Seals

S - Nitrile (for use with most industrial hydraulic coils)

SV - Viton (for high temperature and most special fluid applications)

6 High pressure setting bar

(10 bar increments) 150 to 230 bar (2175 to 3335 psi)

7 Counterbalance setting bar

(10 bar increments)
20 to 170 bar (300 tp 250 psi)

Dimensions

mm (inch)

Cartridge only
Basic Code
1CEL90

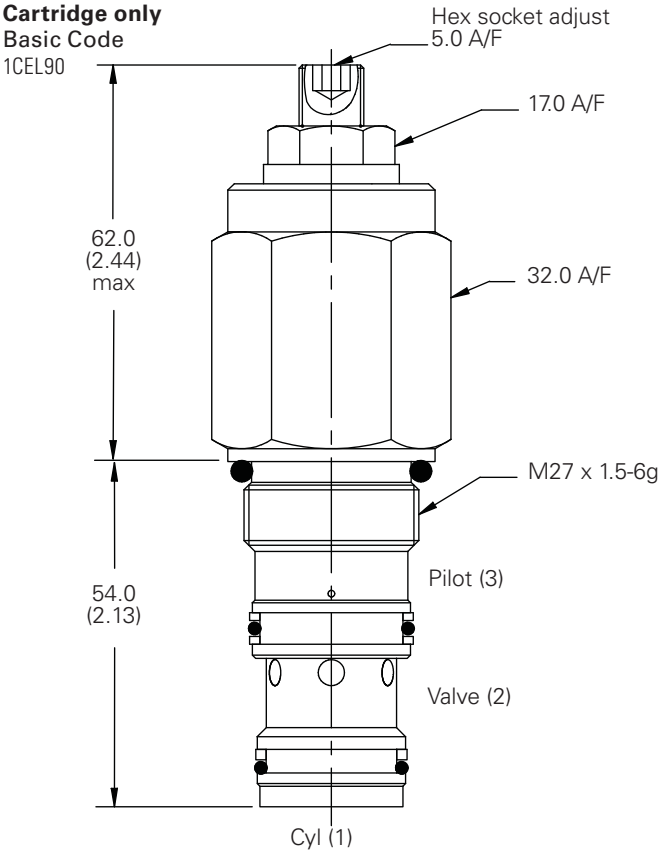

Note: For applications above 210 bar, please consult our technical department or use the steel body option.

Note: Tightening torque of "F" adjuster locknut - 20 to 25 Nm.

Single valve
1/2" Ports
Basic Code
1CEL95

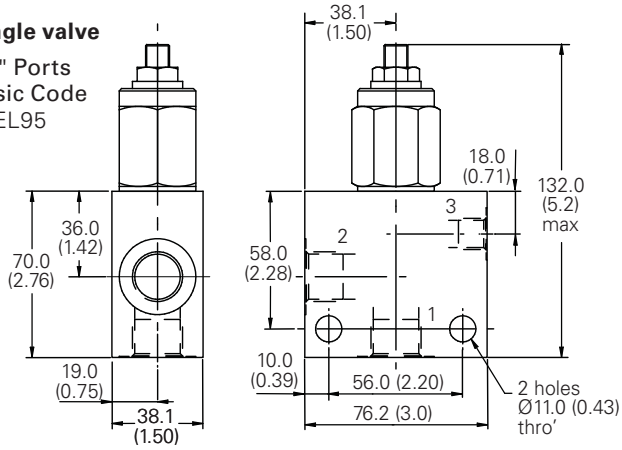

Dual valve
1/2" Ports
Basic Code 1CEEL95
Internally Cross Piloted)

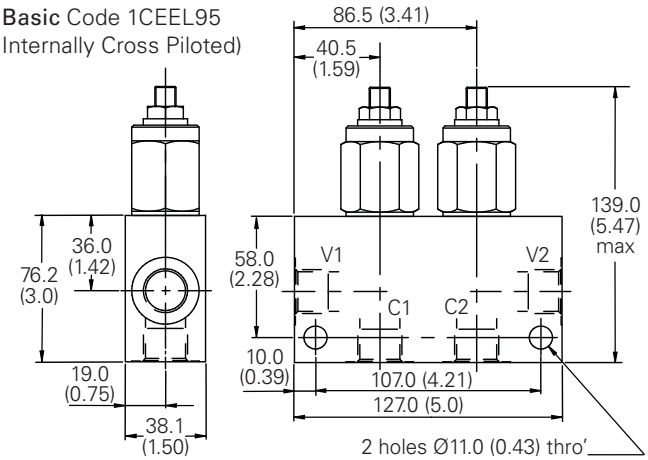

Where measurements are critical request certified drawings. We reserve the right to change specifications without notice.

1CPBD90 - Overcenter valve

Zero differential with check
90 L/min (23 USgpm) • 350 bar (5000 psi)

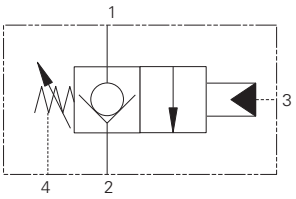

Sectional view

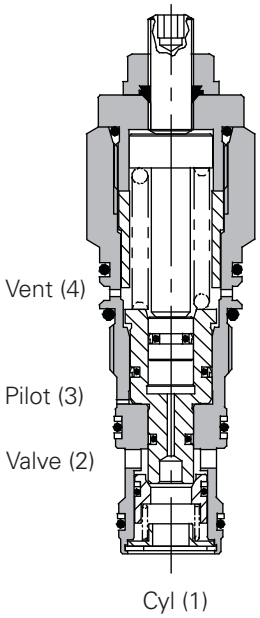

Operation

The check section allows free flow into the actuator then holds and locks the load against movement. By the application of pilot pressure to the pilot port the poppet moves back against the main spring opening the cylinder port to the valve port. The metering characteristic of the valve is controlled by the rate of the spring, the seat angle and the pilot pressure applied.

Due to the balanced poppet design load induced pressure will not open the valve and once open valve port pressure will not increase the pilot pressure required to keep the valve open.

Pilot ratios

The cartridge fits a simple cavity allowing quick, easy field service reducing down time. Hardened poppet and seat provide for long leak free performance.

Performance data

Ratings and Specifications

Figures based on: Oil Temp = 40°C Viscosity = 32 cSt (150 SUS)	
Rated flow	90 L/min (23 USgpm)
Maximum working pressure	350 bar (5000 psi)
Cartridge material	Working parts hardened and ground steel. External surfaces zinc plated.
Mounting position	Unrestricted
Cavity number	A12196 (See Section M)
Torque cartridge into cavity	60 Nm (44 ft. lbs.)
Weight	0.29 kg (0.63 lbs.)
Seal kit number	SK634 (Nitrile) SK634V (Viton®)
Recommended filtration level	BS5540/4 Class 18/13 (25 micron nominal)
Temperature	-30° C to +90° C (-22° to +194°F)
Internal leakage	0.3 milliliters/min nominal (5 dpm)
Nominal viscosity range	5 to 500 cSt

Viton is a registered trademark of E.I. DuPont.

Application

Zero differential overcenter valves give static and dynamic control of loads by supplying a restriction to flow related to the opening of the valve created by the pilot pressure.

The valve is used in conjunction with a remote pilot source to provide hose failure protection, load control and load holding functions.

If over-pressure or shock pressure protection is required then a separate relief valve should be used.

The drain line allows the valve to be used in corrosive atomspheres preventing the ingestion of atomosphere contamination.

Pressure drop

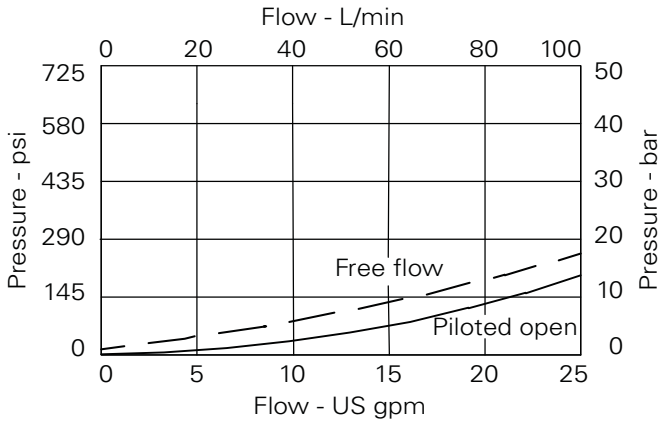

Where measurements are critical request certified drawings. We reserve the right to change specifications without notice.

Model code

1CPBD90 – F – 2 P

1 2 3 4

1 Function

1CPBD90 - Cartridge Only

Line body available on request.

2 Adjustment means

F - Screw Adjustment

3 Pilot adjustment range @ 4.8 L/min

Note: Code based on pressure in bar.

2 - 5 - 20 bar.
Standard setting: 10 bar

Standard setting made at 4.8 L/min

4 Seals

S - Nitrile (for use with most industrial hydraulic coils).

SV - Viton (for high temperature andmost special fluid applications).

P - Polyurethane/Nitrile (for arduous applications)

Dimensions

mm (inch)

Cartridge only
Basic Code
1CPBD90

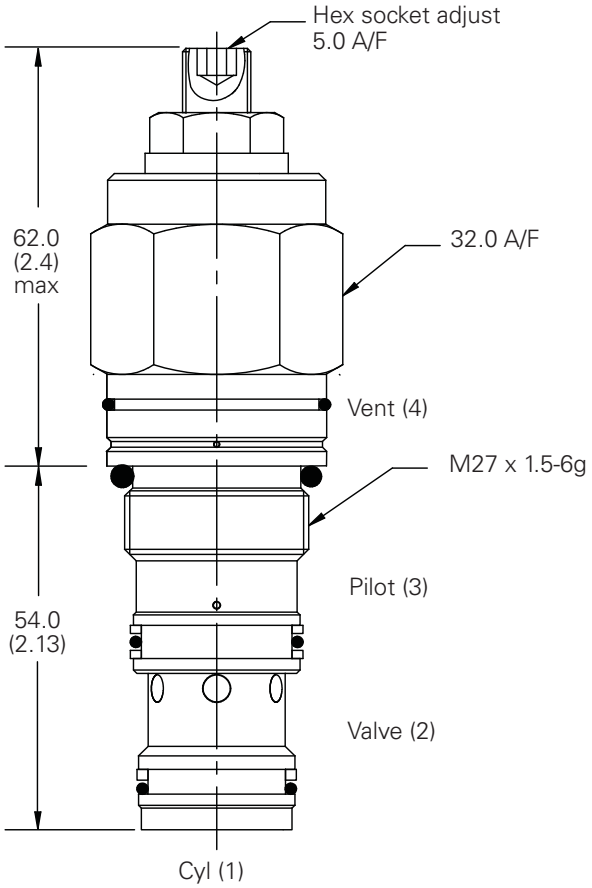

Note: Tightening torque of "F" adjuster locknut - 20 to 25 Nm

F

1CPPD90 - Piloted Bi-directional poppet valve

Poppet, pilot operated, normally closed, zero differential
90 L/min (23 USgpm) • 350 bar (5000 psi)

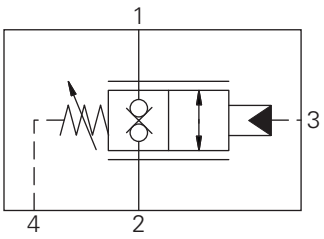

Operation

By the application of pilot pressure to the pilot port the poppet moves back against the main spring opening. The metering characteristic of the valve is controlled by the rate of the spring, the seat angle and the pilot pressure applied.

Due to the balanced poppet design load induced pressure will not open the valve and once open valve port pressure will not increase the pilot pressure required to keep the valve open.

Features

The cartridge fits a simple cavity allowing quick, easy field service reducing down time. Hardened poppet and seat provide for long leak free performance.

Sectional view

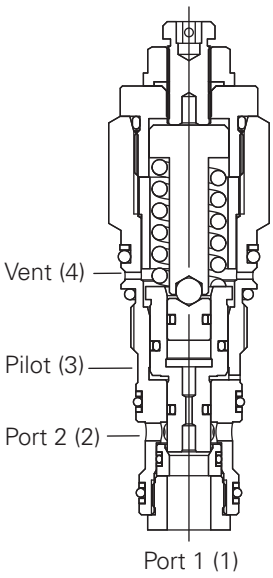

Performance data

Ratings and Specifications

Figures based on: Oil Temp = 40˚C Viscosity = 32 cSt (150 SUS)	
Rated flow	90 L/min (23 USgpm)
Maximum working pressure	350 bar (5000 psi)
Cartridge material	Working parts hardened and ground steel.
Mounting position	External surfaces Nickel/ Zinc plated.
Cavity number	Unrestricted
Torque cartridge into cavity	A12196 (See Section M)
Weight	60 Nm (44 ft. lbs.)
Seal kit number	SK1453 (Nitrile) SK1453V (Viton*) SK1453P (Polyurethane/ Nitrile)
Recommended filtration level	BS5540/4 Class 18/13 (25 micron nominal)
Temperature	-30° C to +90° C (-22° to +194°F)
Internal leakage	0.3 milliliters/min nominal (5 dpm)
Nominal viscosity range	5 to 500 cSt

Viton is a registered trademark of E.I. DuPont.

Application

Normally closed pilot operated zero differential bi-directional poppet valve providing flow control by application of pilot pressure to actuate the poppet and increase the flow path

Balanced construction ensures predictable switching regardless of pressure in port 1 or 2. The drain line allows the valve to be used in corrosive atmospheres preventing the ingress of atmospheric contamination.

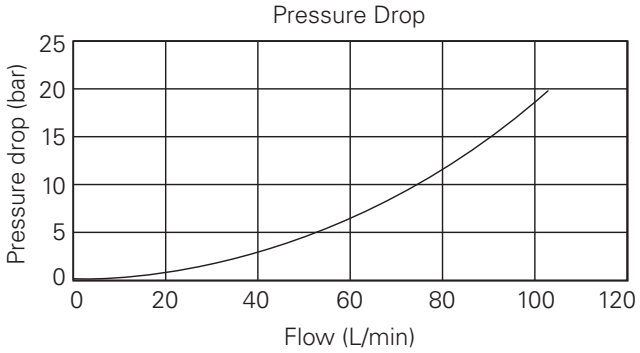

Where measurements are critical request certified drawings. We reserve the right to change specifications without notice.

1CPPD90 - Piloted Bi-directional poppet valve

Poppet, pilot operated, normally close, zero differential
90 L/min (23 USgpm) • 350 bar (5000 psi)

Model code

1CPPD90 – F – 2 P

1 2 3 4

1 Function

1CPPD90 - Cartridge Only

2 Adjustment means

F - Screw Adjustment
G - Tamperproof Cap
N - Fixed - State pressure setting required

3 Pilot adjustment range @ 4.8 L/min

Note: Code based on pressure in bar.

2 - 8 - 25 bar.
Standard setting: 10 bar

Standard setting made at 4.8 L/min

4 Seals

S - Nitrile (for use with most industrial hydraulic coils).

SV - Viton (for high temperature andmost special fluid applications).

P - Polyurethane/Nitrile (for arduous applications)

Line body available on request.

Dimensions

mm (inch)

Cartridge only
Basic Code
1CPPD90

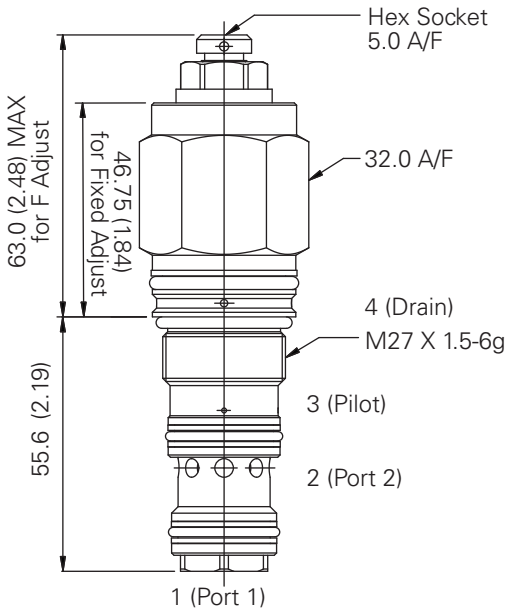

Note: Tightening torque of "F" adjuster locknut - 20 to 25 Nm

F

Where measurements are critical request certified drawings. We reserve the right to change specifications without notice.

1CE120 - Overcenter valve

Pilot assisted relief with check
120 L/min (32 USgpm) • 270 bar (4000 psi)

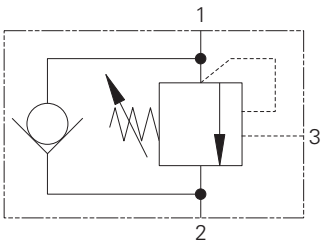

Sectional view

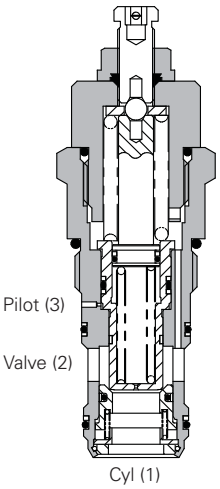

Description

Overcenter valves give static and dynamic control of loads by regulating the flow into and out of hydraulic actuators. When installed close to or within an actuator, the overcenter valve will stop runaway in the event of hose burst and if open center directional control valves are used, will allow thermal expansion relief of the hydraulic fluid.

The overcenter cartridge is ideal for mounting directly into a cavity machined in the body of the cylinder, motor or rotary actuator. The cartridge can also be mounted directly to the ports via a specifically machined body as part of a Hydraulic Integrated Circuit or single unit, or contained within one of our standard line bodies.

Single overcenter valves are normally used when the load is unidirectional, for example an aerial platform or crane and dual overcenter valves are used for controlling loads in both directional for motor applications or for cylinders going over center.

Operation

The check section allows free flow into the actuator then holds and locks the load against movement. The pilot assisted relief valve section will give controlled movement when pilot pressure is applied. The relief section is normally set to open at a pressure at least 1.3 times the maximum load induced pressure but the pressure required to open the valve and allow movement depends on the pilot ratio of the valve. For optimization of load control and energy usage, a choice of pilot ratios is available

The pressure required to open the valve and start actuator movement can be calculated as follows:

$$\text{Pilot Pressure} = \frac{\text{(Relief Setting) - (Load Pressure)}}{\text{Pilot Ratio}}$$

Features

Cartridge is economical and fits simple cavity. Allows quick, easy field service - reduces down time. Interchangeable with pilot check valve of a similar size.

Pilot ratio

3.5:1 (standard) Best suited for applications where load varies and machine structure can induce instability.

8:1 Best suited for applications where the load remains relatively constant.

Performance data

Ratings and specifications

Figures based on: Oil Temp = 40°C Viscosity = 32 cSt (150 SUS)	
Rated flow	120 L/min (32 USgpm)
Max relief setting	350 bar (5000 psi)
Max load induced pressure	270 bar (4000 psi)
Cartridge material	Working parts hardened and ground steel. External surfaces zinc plated.
Standard housing material	Aluminum (up to 210 bar). Add suffix "377" for steel option.
Mounting position	Unrestricted
Cavity number	A877 (See Section M)
Torque cartridge into cavity	100 Nm (74 lbs ft)
Weight	1CE120 0.59 kg (1.30 lbs) 1CE150 1.46 kg (3.20 lbs 1CEE150 2.58 kg (5.70 lbs)
Seal kit number	SK417 (Nitrile) SK417V (Viton®)
Recommended filtration level	BS5540/4 Class 18/13 (25 micron nominal)
Operating temperature	-30°C to +90°C (-22° to +194°F)
Leakage	0.3 milliliters/min nominal (5 dpm)
Nominal viscosity range	5 to 500 cSt

Viton is a registered trademark of E.I. DuPont.

Pressure drop

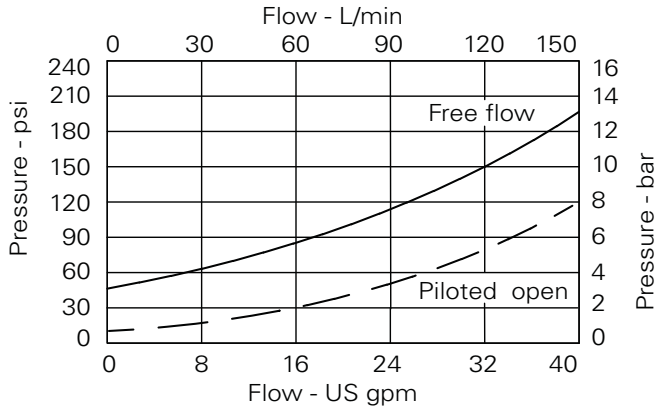

Where measurements are critical request certified drawings. We reserve the right to change specifications without notice.

Model code

1CE** – F 6W – 35 S 3**

1 2 3 4 5 6

1 Function

1CE120 - Cartridge Only
1CE150 - Cartridge and Body
1CEE150 - Cartridges and Dual Body

2 Adjustment means

F - Screw Adjustment

3 Port sizes

Code	Port size	Housing number			
		Aluminium single	Steel single	Aluminium dual	Steel dual
6W	3/4" BSP Valve & Cyl Port. 1/4" BSP Pilot Port	B6898	B5544	C2543	C1200
12T	3/4" SAE Valve & Cyl Port. 1/4" SAE Pilot Port	B8200		C10629	C16434
16T	1" SAE Valve & Cyl Port. 1/4" SAE Pilot Port	B10708	B11814		

4 Pressure range @ 4.8 l/min

Note: Code based on pressure in bar.

35 - 70-350 bar.
Std setting 210 bar

Std setting made at 4.8 L/min

5 Seals

S - Nitrile (For use with most industrial hydraulic oils)

SV - Viton (For high temperature and most special fluid applications)

6 Pilot Ratio

3 - 3.5:1

8 - 8:1

Dimensions

mm (inch)

Cartridge only
Basic Code
ICE120

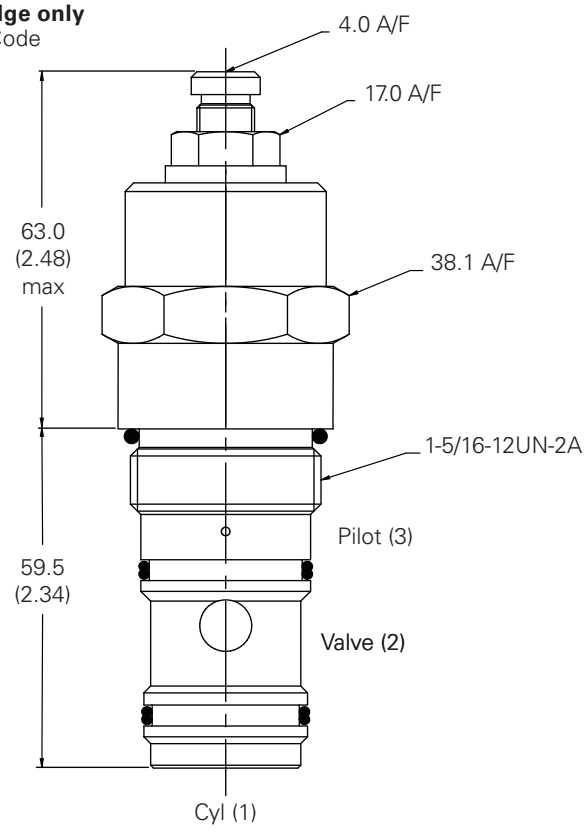

Single valve
3/4" , 1" Ports
Basic Code
1CE150

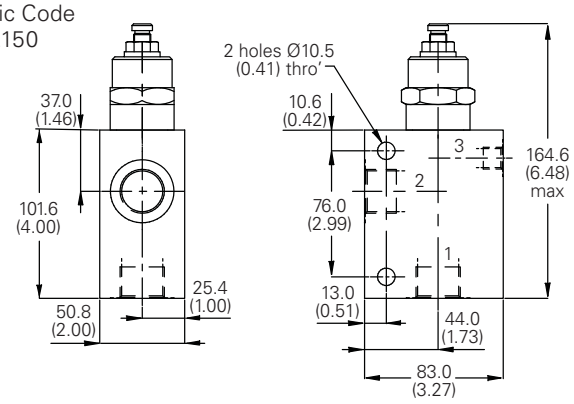

Dual valve
3/4"
Basic Code 1CEE150
Internally Cross Piloted

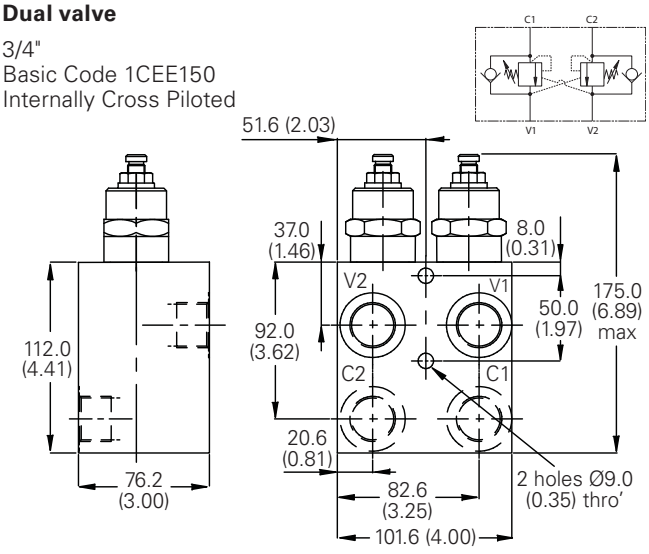

Note: Tightening torque of "F" adjuster locknut - 20 to 25 Nm.

Note: For applications above 210 bar - please consult our technical department or use the steel body option.

Where measurements are critical request certified drawings. We reserve the right to change specifications without notice.

1CEB120 - Overcenter valve

Fully balanced, pilot assisted relief with check
120 L/min (32 USgpm). 270 bar (4000 psi)

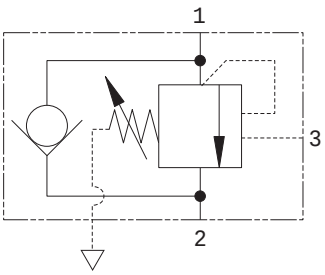

Operation

The check section allows free flow into the actuator then holds and locks the load against movement. The pilot assisted relief valve section will give controlled movement when pilot pressure is applied. The relief section is normally set to open at a pressure at least 1.3 times the maximum load induced pressure but the pressure required to open the valve and allow movement depends on the pilot ratio of the valve. For optimization of load control and energy usage, a choice of pilot ratios is available.

The pressure required to open the valve and start actuator movement can be calculated as follows:

$$\text{Pilot Pressure} = \frac{\text{(Relief Setting) - (Load Pressure)}}{\text{Pilot Ratio}}$$

Features

Cartridge is economical and fits simple cavity. Allows quick, easy field service - reduces down time. Interchangeable with pilot check valve of a similar size.

Pilot ratio

3:1 (standard) Best suited for applications where load varies and machine structure can induce instability.

8:1 Best suited for applications where the load remains relatively constant.

Sectional view

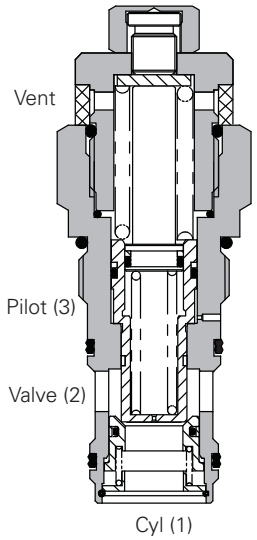

Description

Overcenter valves give static and dynamic control of loads by supplying a counterbalance pressure to the actuator. They prevent runaway in the event of hose burst and hold the load with minimal leakage.

The pressure balanced valve is unaffected by back pressure, allowing service line reliefs to operate and for the valve to be used in regenerative or proportional valve systems.

The overcenter valve should be mounted either into, onto or as close to the actuator as possible to give maximum protection.

Single overcenter valves control unidirectional loads such as in aerial platforms, cranes or winches and dual overcenters are suited to bi-directional motion such as wheel motor applications or cylinders going over center.

Performance data

Ratings and specifications

Figures based on: Oil Temp = 40°C Viscosity = 32 cSt (150 SUS)	
Rated flow	120 L/min (32 USgpm)
Max relief setting	350 bar (5000 psi)
Max load induced pressure	270 bar (4000 psi)
Cartridge material	Working parts hardened and ground steel. External surfaces zinc plated.
Standard housing material	Aluminum (up to 210 bar). Add suffix "377" for steel option.
Mounting position	Unrestricted
Cavity number	A877 (See Section M)
Torque cartridge into cavity	100 Nm (74 lbs ft)
Weight	1CEB120 0.59 kg (1.30 lbs) 1CEB150 1.46 kg (3.20 lbs) 1CEEB150 2.58 kg (5.70 lbs)
Seal kit number	SK417 (Nitrile) SK417V (Viton®)
Recommended filtration level	BS5540/4 Class 18/13 (25 micron nominal)
Operating temperature	-30° to +90°C (-22° to +194°F)
Leakage	0.3 milliliters/min nominal (5 dpm)
Nominal viscosity range	5 to 500 cSt

Viton is a registered trademark of E.I. DuPont.

Pressure drop

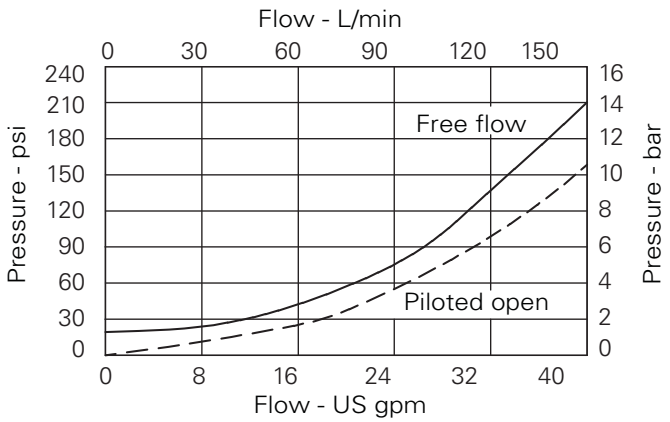

Where measurements are critical request certified drawings. We reserve the right to change specifications without notice.

1CEB120 - Overcenter valve

Fully balanced, pilot assisted relief with check
120 L/min (32 USgpm). 270 bar (4000 psi)

Model code

1CE*** – P 6W – 35 S 3**

1 2 3 4 5 6

1 Function

1CEB120 - Cartridge only

1CEB150 -Cartridge in body

1CEEB150 - Cartridges in dual body

2 Adjustment means

P - Leakproof screw adjustment

3 Port sizes

Code	Port Size	Housing number - body only			
		Aluminium single	Steel single	Aluminium dual	Steel dual
6W	3/4" BSP Valve & Cyl Port. 1/4" BSP Pilot Port	B6898	B5544	C2543	C1200
12T	3/4" SAE Valve & Cyl Port. 1/4" SAE Pilot Port	B8200		C10629	C16434
16T	1" SAE Valve & Cyl Port. 1/4" SAE Pilot Port	B10708	B11814		

4 Pressure range @ 4.8 l/min

Note: Code based on pressure in bar.

35 - 70-350 bar.
Std setting 210 bar
Std setting made at 4.8 L/min

5 Seals

S -Nitrile (For use with most industrial hydraulic oils)

SV - Viton (For high temperature and most special fluid applications)

P - Polyurethane/Nitrile (For arduous applications)

6 Pilot ratio

3 - 3:1 (Standard)

8 - 8:1

Dimensions

mm (inch)

Cartridge only
Basic Code
ICEB120

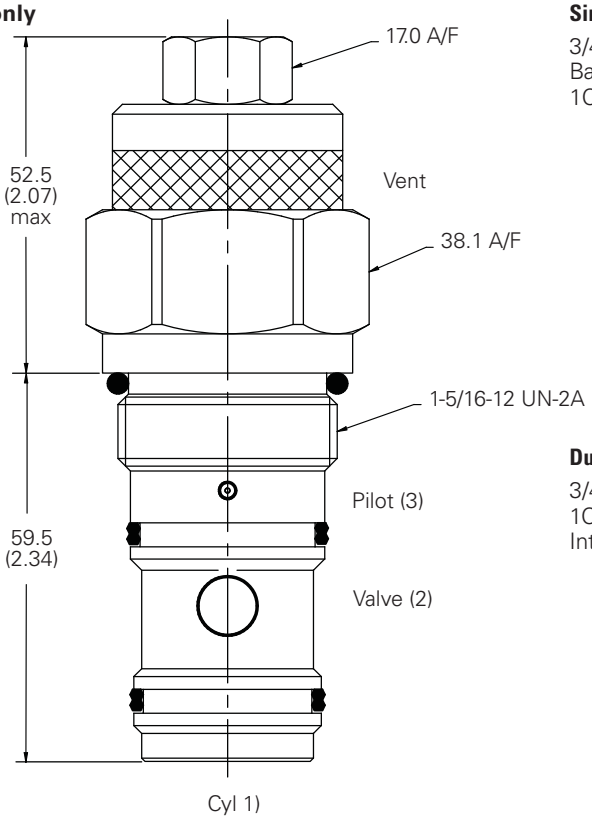

Single valve
3/4" , 1" Ports
Basic Code
1CEB150

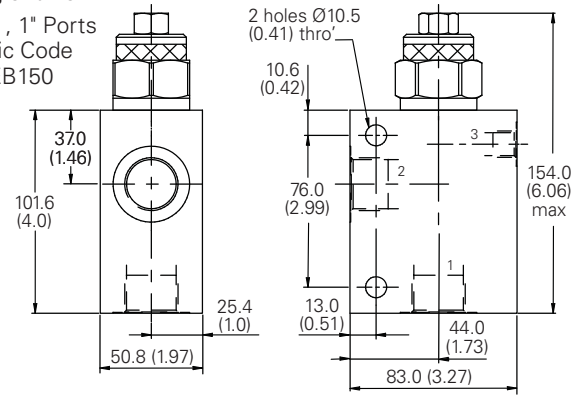

Dual valve
3/4" Ports
1CEEB150
Internally Cross Piloted

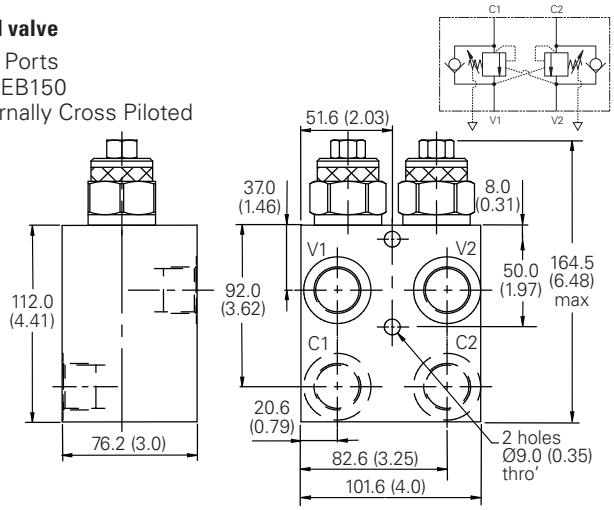

Note: For applications above 210 bar - please consult our technical department or use the steel body option

Note: Tightening torque of "F" adjuster locknut - 20 to 25 Nm.

Where measurements are critical request certified drawings. We reserve the right to change specifications without notice.

1CEBD120 - Overcenter valve

Fully balanced, pilot assisted relief with check
180 L/min (47 USgpm) • 270 bar (4000 psi)

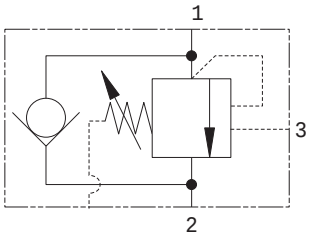

Sectional view

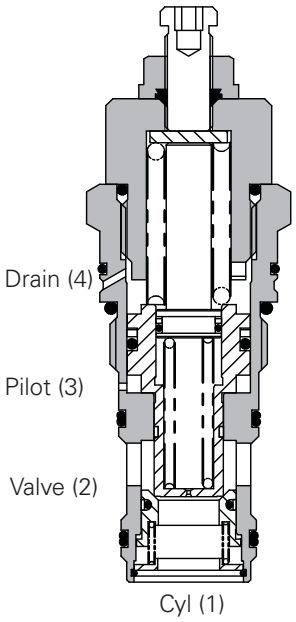

Description

Overcenter valves give static and dynamic control of loads by supplying a counterbalance pressure to the actuator. They will stop runaway in the event of hose burst and hold the load with minimal leakage.

The pressure balanced overcenter relief setting is unaffected by back pressure, enabling the valve to stay open when the valve port pressure rises. This will allow service line reliefs to work normally and will also allow the control of regenerative or proportional systems. The drain line allows the valve to be used in corrosive atmospheres preventing the ingress of atmospheric contaminant.

Single overcenter valves are normally used when the load is unidirectional, for example an aerial platform or crane and dual overcenter valves are used for controlling loads in both directional for motor applications or for cylinders going over center.

Operation

The check section allows free flow into the actuator then holds and locks the load against movement. The pilot assisted relief valve section will give controlled movement when pilot pressure is applied. The relief section is normally set to open at a pressure at least 1.3 times the maximum load induced pressure but the pressure required to open the valve and allow movement depends on the pilot ratio of the valve. For optimization of load control and energy usage, a choice of pilot ratios is available.

The pressure required to open the valve and start actuator movement can be calculated as follows:

$$\text{Pilot Pressure} = \frac{\text{(Relief Setting) - (Load Pressure)}}{\text{Pilot Ratio}}$$

Features

Cartridge is economical and fits simple cavity. Allows quick, easy field service - reduces down time.

Pilot ratio

3:1 (standard) Best suited for applications where load varies and machine structure can induce instability.

8:1 & 12:1 Best suited for applications where the load remains relatively constant.

22:1 Specifically designed for Boom Loc applications.

Performance data

Ratings and specifications

Figures based on: Oil Temp = 40°C Viscosity = 32 cSt (150 SUS)	
Rated flow	180 L/min (47 USgpm)
Max relief setting	400 bar (5800 psi)
Max load induced pressure	270 bar (4000 psi)
Cartridge material	Working parts hardened and ground steel. External surfaces electroless nickel plated.
Mounting position	Unrestricted
Cavity number	A6726 (See Section M)
Torque cartridge into cavity	100 Nm (74 lbs ft)
Weight	0.59 kg (1.30 lbs)
Seal kit number	SK830 (Nitrile) SK830V (Viton®) SK830P (Polyurethane/Nitrile)
Recommended filtration level	BS5540/4 Class 18/13 (25 micron nominal)
Operating temperature	-30°C to +90°C (-22° to +194°F)
Leakage	0.3 milliliters/min max (5 dpm)
Nominal viscosity range	5 to 500 cSt
Bar per turn	65 bar

Viton is a registered trademark of E.I. DuPont.

Pressure drop

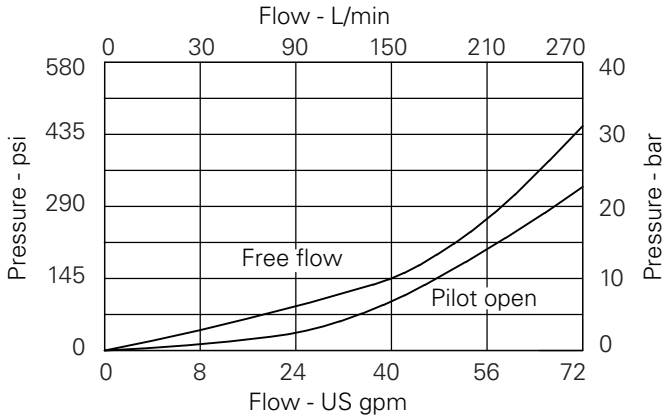

Where measurements are critical request certified drawings. We reserve the right to change specifications without notice.

Model code

1CEBD120 – F – 35 P 8

1 2 3 4 5

1 Function
1CEBD120 - Cartridge only

2 Adjustment means
F - Screw adjustment

3 Pressure range @ 4.8 l/min
Note: Code based on pressure in bar.
35 - (3:1, 8:1 and 22:1): 70-350 bar Std setting 350 bar
40 - (12:1): 70-400 bar. Std setting 350 bar Std setting made at 4.8 L/min

4 Seals
S - Nitrile (For use with most industrial hydraulic oils)
SV - Viton (For high temperature and most special fluid applications)
P - Polyurethane/Nitrile (For arduous applications)

5 Pilot ratio
3 - 3:1
8 - 8:1
12 - 12:1
22 - 22:1

Dimensions

mm (inch)

Cartridge only
Basic Code
1CEBD120

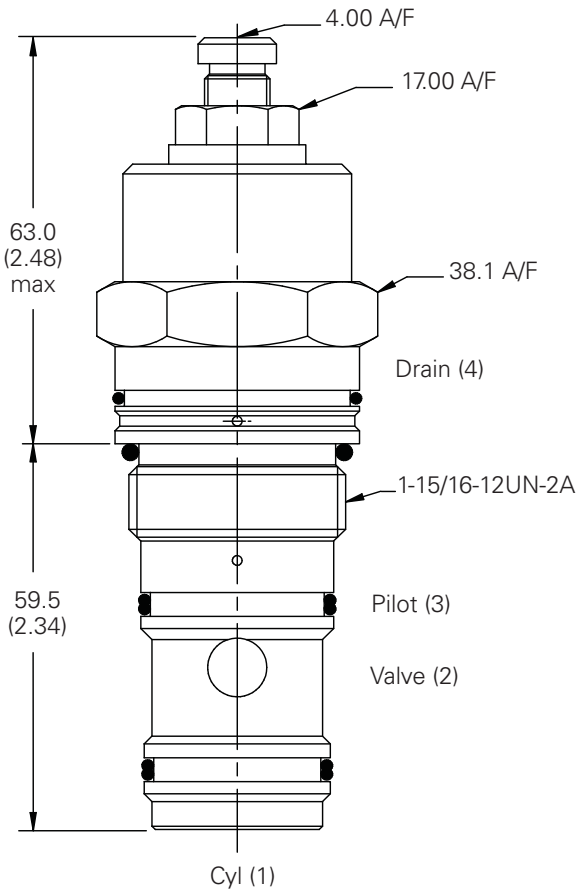

Note: For applications above 210 bar - please consult our technical department or use the steel body option

Note: Tightening torque of "F" adjuster locknut - 20 to 25 Nm

F

1CPBD120 - Overcenter valve

Zero differential with check
180 L/min (47 USgpm) • 400 bar (5800 psi)

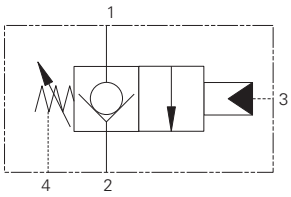

Operation

The check section allows free flow into the actuator then holds and locks the load against movement. By the application of pilot pressure to the pilot port the poppet moves back against the main spring opening the cylinder port to the valve port. The metering characteristic of the valve is controlled by the rate of the spring, the seat angle and the pilot pressure applied.

Due to the balanced poppet design load induced pressure will not open the valve and once open valve port pressure will not increase the pilot pressure required to keep the valve open.

Features

The cartridge fits a simple cavity allowing quick, easy field service reducing down time. Hardened poppet and seat provide for long leak free performance.

Sectional view

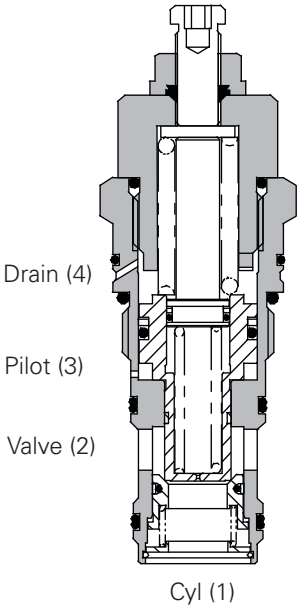

Description

Zero differential overcenter valves give static and dynamic control of loads by supplying a restriction to flow related to the opening of the valve created by the pilot pressure.

The valve is used in conjunction with a remote pilot source to provide hose failure protection, load control and load holding functions.

If over-pressure or shock pressure protection is required then a separate relief valve should be used.

The drain line allows the valve to be used in corrosive atmospheres preventing the ingress of atmospheric contaminant.

Performance data

Ratings and specifications

Figures based on: Oil Temp = 40°C Viscosity = 32 cSt (150 SUS)	
Rated flow	180 L/min (47 USgpm)
Max working pressure	400 bar (5800 psi)
Cartridge material	Working parts hardened and ground steel. External surfaces zinc plated.
Mounting position	Unrestricted
Cavity number	A6726 (See Section M)
Torque cartridge into cavity	100 Nm (74 lbs ft)
Weight	0.59 kg (1.30 lbs)
Seal kit number	SK830 (Nitrile) SK830V (Viton®) SK830P (Polyurethane/Nitrile)
Recommended filtration level	BS5540/4 Class 18/13 (25 micron nominal)
Operating temperature	-30° to +90°C (-22° to +194°F)
Leakage	0.3 milliliters/min max (5 dpm)
Nominal viscosity range	5 to 500 cSt
Bar per turn	5 bar

Viton® is a registered trademark of E.I. DuPont

Pressure drop

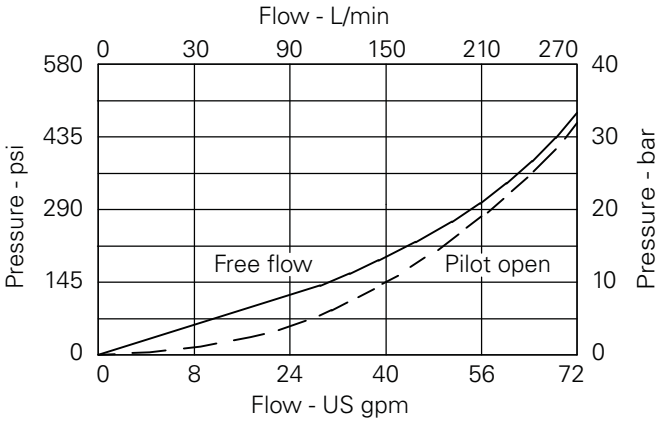

Where measurements are critical request certified drawings. We reserve the right to change specifications without notice.

Model code

1CPBD120 – F – 2 P

1 2 3 4

1 Function
1CPBD120 - Cartridge only

2 Adjustment means
F - Screw adjustment

3 Pilot adjust range
Note: Code based on pressure in bar.
2 - 5-20 bar.
Std setting 10 bar
Std setting made at 4.8 L/min

4 Seals
S - Nitrile (For use with most industrial hydraulic oils)
SV - Viton (For high temperature and most special fluid applications)
P - Polyurethane/Nitrile (For arduous applications)

Dimensions

mm (inch)

Cartridge only
Basic Code
1CPBD120

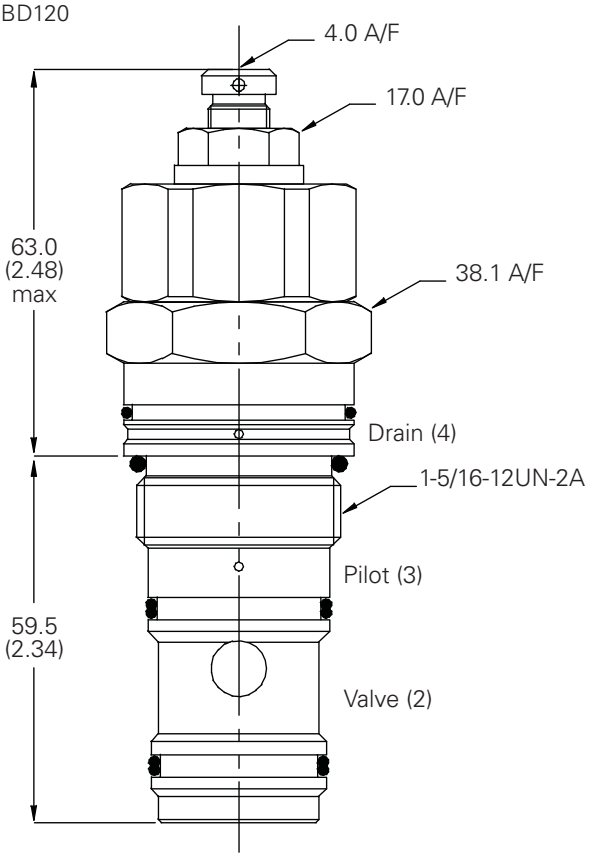

Note: Tightening torque of "F" adjuster locknut - 20 to 25 Nm.

F

Where measurements are critical request certified drawings. We reserve the right to change specifications without notice.

1CE - Overcenter valve

Alternative body arrangements
for 100 Liters/min valves

Model code

1C** – F 6W – 35 S 3**

1 2 3 4 5 6

1 Function

1CE156/1CEB156 - Cartridge & Body Through Ported

1CBE150/1CBEB150 - Cartridge & Body Banjo Mounted

1CEG150/1CEBG150 - Cartridge & Body Gasket Mounted

2 Adjustment means

P - Leakproof Screw Adjust (1CEB156/1CBEB150/ 1CEBG150)

F - Screw Adjust (1CE156/1CBE150/ 1CEG150

3 Port sizes

Code	Port size	Housing number - body only	
		Aluminum	Steel
1CE156/1CE156 Complete Valve Body ONLY part numbers			
6W	3/4" BSP Valve & Cyl Port. 1/4" BSP Pilot Port	B13629	B13630
1CBE150/1CBEB150 Sub-assembly part numbers			
6W	3/4" BSP Valve & Cyl Port. 1/4" BSP Pilot Port	AXP13565-6W-S	
1CEG150/1CEBG150 Gasket Mounted numbers			
6W	3/4" SAE 6000 PSI Flange Ports	BXP13634-6W-S	BXP13634-6W-S-377

4 Pressure range @ 4.8 l/min

Note: Code based on pressure in bar.

35 - 70-350 bar.
Std setting 210 bar
Std setting made at 4.8 L/min

5 Seals

S - Nitrile (For use with most industrial hydraulic oils)

SV - Viton (For high temperature and most special fluid applications)

P - Polyurethane/Nitrile (For arduous applications)

6 Pilot ratio

3 - 3.5:1 - 1CE156/1CBE150/ 1CEG150

3 - 3:1 - 1CEB156/1CBEB150/ 1CEBG150 (Standard)

8 - 8:1 - 1CEB156/1CBEB150/ 1CEBG150

F

Where measurements are critical request certified drawings. We reserve the right to change specifications without notice.

Dimensions

mm (inch)

Complete valve
Through Ported
3/4" Ports
Basic Code
1CE156/1CEB156

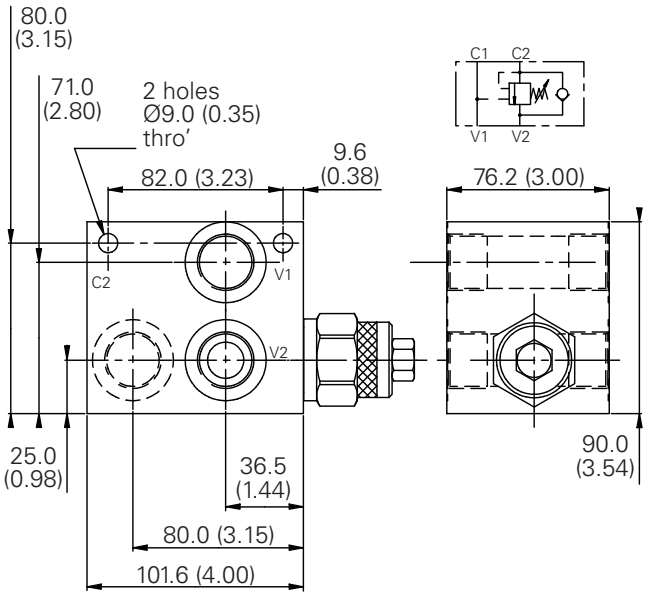

Complete valve
3/4" Ports

Banjo Mounted
Basic Code
1CBE150/1CBEB150

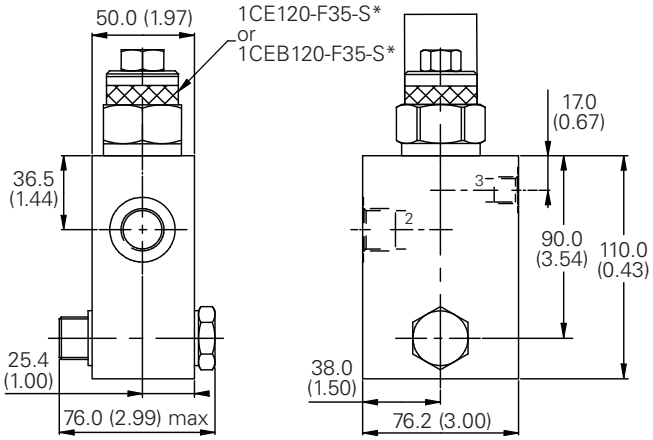

Complete valve
3/4" Ports SAE 6000 PSI Flange Ports
1CEG150/1CEBG150
Gasket Mounted

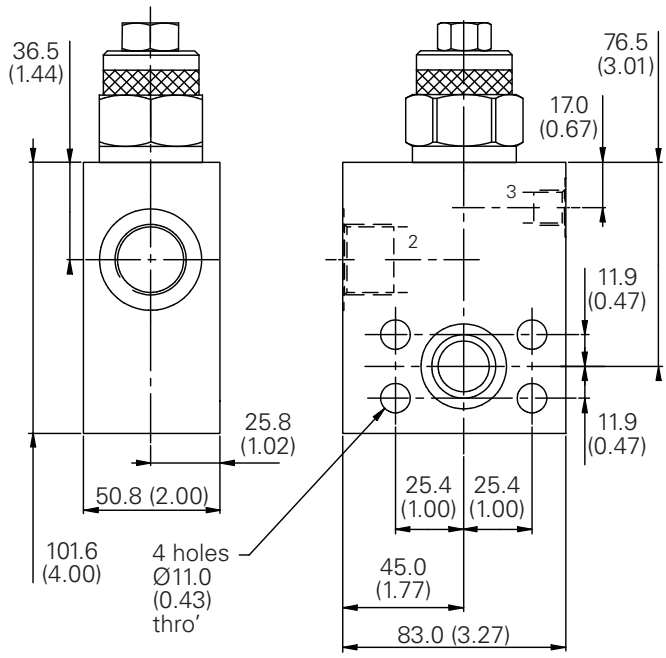

Note: Tightening torque of "F" adjuster locknut - 20 to 25 Nm.

Note: For applications above 210 please consult our Technical Department or use the steel body option.

F

Where measurements are critical request certified drawings. We reserve the right to change specifications without notice.

1CE140 - Overcenter valve

Pilot assisted relief with check
140 L/min (37 USgpm) • 340 bar (4930 psi)

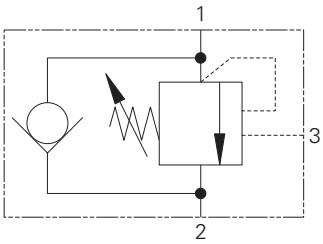

Sectional view

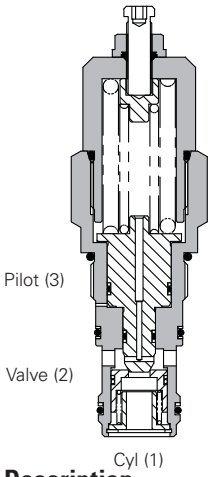

Description

Overcenter valves give static and dynamic control of loads by regulating the flow into and out of hydraulic actuators. When installed close to or within an actuator, the overcenter valve will stop runaway in the event of hose burst and if open center directional control valves are used, will allow thermal expansion relief of the hydraulic fluid.

The overcenter cartridge is ideal for mounting directly into a cavity machined in the body of the cylinder, motor or rotary actuator. The cartridge can also be mounted directly to the ports via a specifically machined body as part of a Hydraulic Integrated Circuit or single unit, or contained within one of our standard line bodies.

Single overcenter valves are normally used when the load is unidirectional, for example an aerial platform or crane and dual overcenter valves are used for controlling loads in both directional for motor applications or for cylinders going over center.

Operation

The check section allows free flow into the actuator then holds and locks the load against movement. The pilot assisted relief valve section will give controlled movement when pilot pressure is applied. The relief section is normally set to open at a pressure at least 1.3 times the maximum load induced pressure but the pressure required to open the valve and allow movement depends on the pilot ratio of the valve. For optimization of load control and energy usage, a choice of pilot ratios is available.

The pressure required to open the valve and start actuator movement can be calculated as follows:

$$\text{Pilot Pressure} = \frac{\text{(Relief Setting) - (Load Pressure)}}{\text{Pilot Ratio}}$$

Features

Cartridge is economical and fits simple cavity. Allows quick, easy field service - reduces down time. Interchangeable with pilot check valve of a similar size.

Pilot ratio

4:1 Best suited for applications where load varies and machine structure can induce instability.

6:1 Best suited for applications where the load remains relatively constant.

Other options available upon request.

Performance data

Ratings and specifications

Figures based on: Oil Temp = 40°C Viscosity = 32 cSt (150 SUS)	
Rated flow	140 L/min (37 USgpm)
Max relief setting	420 bar (6090 psi)
Max load induced pressure	340 bar (4930 psi)
Cartridge material	Working parts hardened and ground steel. External surfaces zinc plated.
Standard housing material	Aluminum (up to 210 bar). Add suffix "377" for steel option.
Mounting position	Unrestricted
Cavity number	A20081
Torque cartridge into cavity	150 Nm (110 lbs ft)
Weight	1CE140 1.2 kg (2.5 lbs) 1CE145 (aluminium) 2.2 kg (4.5 lbs) 1CE145 (steel) 4.0 kg (8.8 lbs) 1CEE145 (aluminium) 2.9 kg (6.4 lbs) 1CEE145 (steel) 6.0 kg (13.2 lbs)
Seal kit number	SK1108 (Nitrile) SK1108V (Viton®)
Recommended filtration level	BS5540/4 Class 18/13 (25 micron nominal)
Operating temperature	-30°C to +90°C (-22° to +194°F)
Leakage	0.3 milliliters/min nominal (5 dpm)
Nominal viscosity range	5 to 500 cSt

Viton is a registered trademark of E.I. DuPont.

Pressure drop

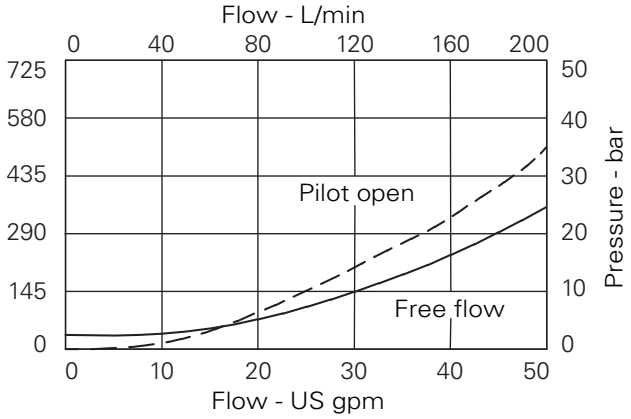

Where measurements are critical request certified drawings. We reserve the right to change specifications without notice.

Model code

1CE**** **– F 6W – 40 S 4**

1 2 3 4 5 6

1 Function

1CE140 - Cartridge only

1CE145 - Cartridge and body

1CEE145 - Cartridges and body

2 Adjustment means

F - Screw adjustment

3 Port sizes

Code	Port size	Housing number - body only			
		Aluminium single	Steel single	Aluminium dual	Steel dual
6W	3/4" BSP Valve & Cyl Port. 1/4" BSP Pilot Port	B20105	B20106		
8W	1" BSP Valve & Cyl Port. 1/4" BSP Pilot Port	B20107	B20108	C20285	C20287
16T	1" SAE Valve & Cyl Port. 1/4" SAE Pilot Port	B11946	B11947	C30105	C30106

4 Pressure range @ 4.8 l/min

Note: Code based on pressure in bar.

20 - 140-250 bar.
Std setting 190 bar

30 - 220-330 bar.
Std setting 270 bar

40 - 310-420 bar.
Std setting 370 bar
Std setting made at 4.8 liter/min

5 Seals

S- Nitrile (For use with most industrial hydraulic oils)

SV - Viton (For high temperature and most special fluid applications)

6 Pilot ratio

4 - 4:1

6 - 6:1

Other ratios available upon request

Dimensions

mm (inch)

Cartridge only
Basic Code
1CE140

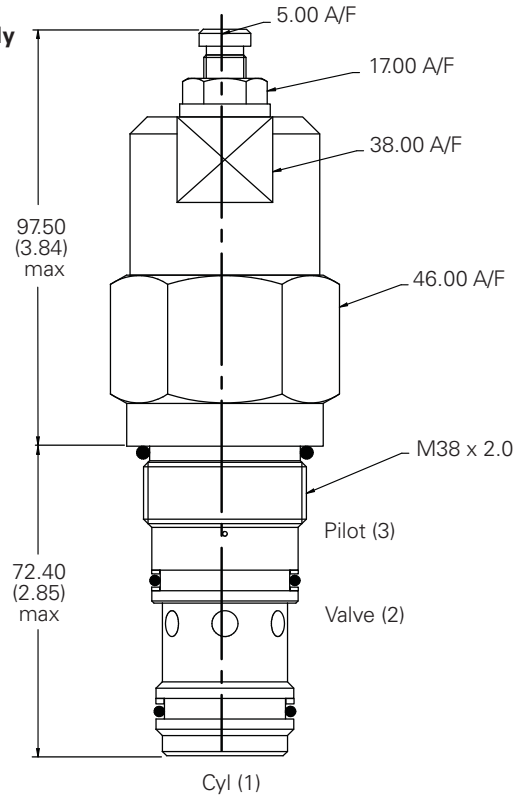

Note: For applications above 210 bar - please consult our technical department or use the steel body option

Note: Tightening torque of "F" adjuster locknut - 20 to 25 Nm.

Single valve
3/4" , 1" Ports
Basic Code 1CE145

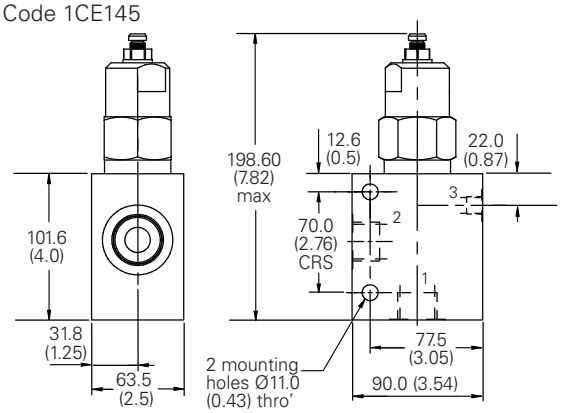

Dual valve
1" Ports
Basic Code 1CEE145
Internally Cross Piloted

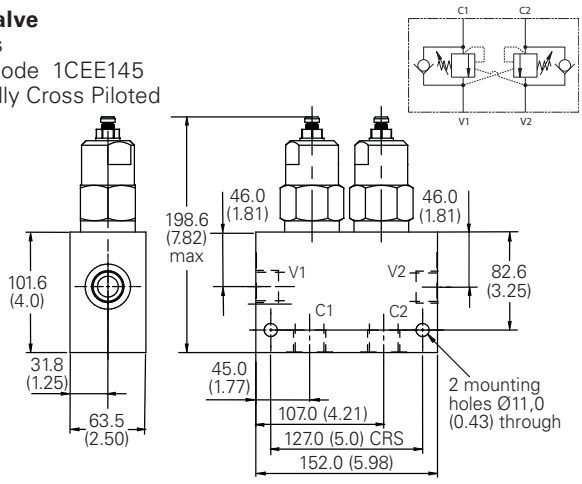

Where measurements are critical request certified drawings. We reserve the right to change specifications without notice.

1CER140 - Overcenter valve

Part balanced, pilot assisted relief with check
140 L/min (37 USgpm) • 340 bar (4930 psi)

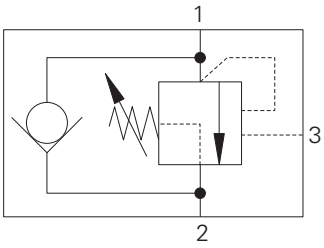

Operation

The check section allows free flow into the actuator then holds and locks the load against movement. The pilot assisted relief valve section will give controlled movement when pilot pressure is applied. The relief section is normally set to open at a pressure at least 1.3 times the maximum load induced pressure but the pressure required to open the valve and allow movement depends on the pilot ratio of the valve. For optimization of load control and energy usage, a choice of pilot ratios is available.

The pressure required to open the valve and start actuator movement can be calculated as follows:

$$\text{Pilot Pressure} = \frac{\text{(Relief Setting) - (Load Pressure)}}{\text{Pilot Ratio}}$$

Features

Cartridge is economical and fits simple cavity. Allows quick, easy field service - reduces down time. Interchangeable with pilot check valve of a similar size.

Pilot ratio

4:1 Best suited for applications where load varies and machine structure can induce instability.

6:1 Best suited for applications where the load remains relatively constant.

Sectional view

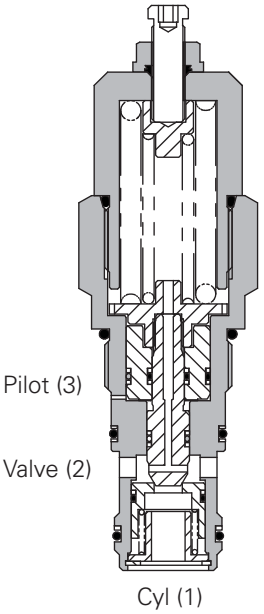

Description

The 1CER series overcenter valve performs all duties of a regular overcenter but is able to relieve and stay open irrespective of downstream pressure. This enables the valve to operate when used with a closed center directional valve which has service line reliefs. The poppet is pressure balanced, preventing relief setting increase due to back pressure.

Performance data

Ratings and specifications

Figures based on: Oil Temp = 40°C Viscosity = 32 cSt (150 SUS)	
Rated flow	140 L/min (37 USgpm)
Max relief setting	420 bar (6090 psi)
Max load induced pressure	340 bar (4930 psi)
Cartridge material	Working parts hardened and ground steel. External surfaces zinc plated.
Standard housing material	Aluminum (up to 210 bar). Add suffix "377" for steel option.
Mounting position	Unrestricted
Cavity number	A20081
Torque cartridge into cavity	150 Nm (110 lbs ft)
Weight	1CER140 1.2 kg (2.6 lbs) 1CER145 (aluminium) 2.2 kg (4.8 lbs) 1CER145 (steel) 4.0 kg (8.8 lbs) 1CEER145 (aluminium) 2.9 kg (6.4 lbs) 1CEER145 (steel) 6.0 kg (13.2 lbs)
Seal kit number	SK1108 Nitrile) SK1108V (Viton®)
Recommended filtration level	BS5540/4 Class 18/13 (25 micron nominal)
Operating temperature	-30° to +90°C (-22° to +194°F)
Leakage	0.3 milliliters/min nominal (5 dpm)
Nominal viscosity range	5 to 500 cSt

Viton is a registered trademark of E.I. DuPont.

Pressure drop

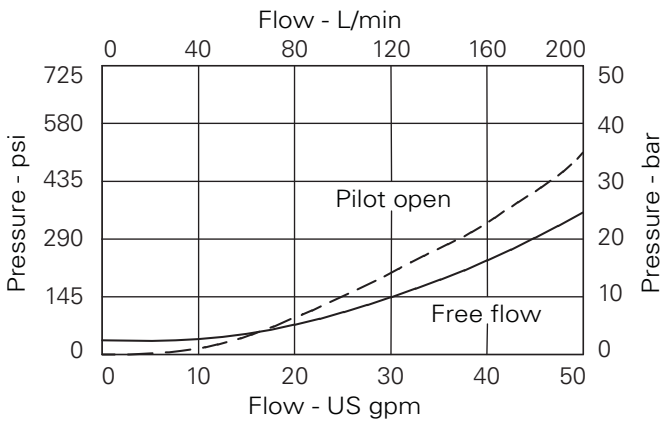

Where measurements are critical request certified drawings. We reserve the right to change specifications without notice.

Model code

1CER* – F 6W – 40 S 4**

1 2 3 4 5 6

1 Function

1CER140 - Cartridge Only

1CER145 - Cartridge and Body

1CEER145 - Cartridges and Body

2 Adjustment means

F - Screw Adjustment

3 Port sizes

Code	Port size	Housing number - body only			
		Aluminium single	Steel single	Aluminium dual	Steel Dual
6W	3/4" BSP Valve & Cyl Port. 1/4" BSP Pilot Port	B20105	B20106		
8W	1" BSP Valve & Cyl Port. 1/4" BSP Pilot Port	B20107	B20108	C20285	C20287
12T	3/4" SAE Valve & Cyl Port. 1/4" SAE Pilot Port	B11952	B11953		
16T	1" SAE Valve & Cyl Port. 1/4" SAE Pilot Port	B11946	B11947	C30105	C30106

4 Pressure range @ 4.8 l/min

Note: Code based on pressure in bar.

20 - 140-250 bar.
Std setting 190 bar

30 - 220-330 bar.
Std setting 270 bar

40 - 310-420 bar.
Std setting 370 bar

Std setting made at 4.8 L/min

5 Seals

S - Nitrile (For use with most industrial hydraulic oils)

SV - Viton (For high temperature and most special fluid applications)

6 Pilot ratio

4 - 4:1

6 - 6:1

Other ratios available upon request

Dimensions

mm (inch)

Cartridge only
Basic Code
1CER140

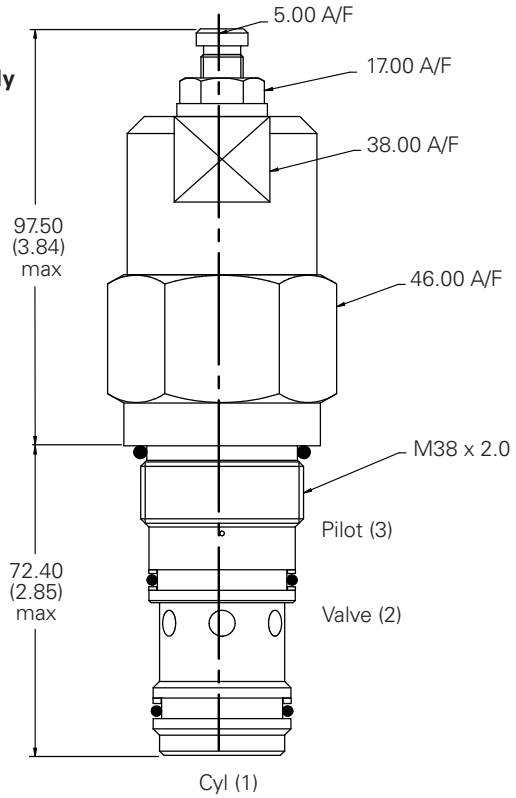

Note: For applications above 210 bar - please consult our technical department or use the steel body option

Note: Tightening torque of "F" adjuster locknut - 20 to 25 Nm.

Single valve
3/4" , 1" Ports
Basic Code
1CER145

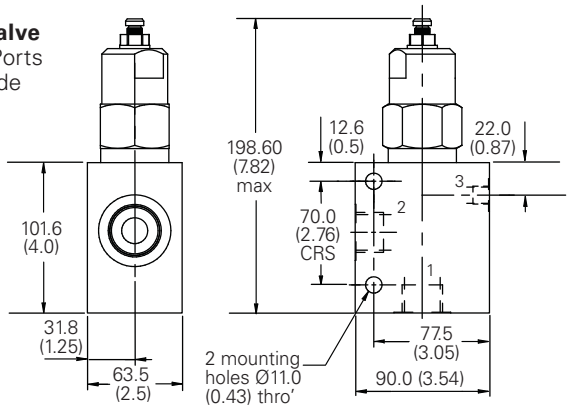

Dual valve
1" Ports
Basic code 1CEER145
Internally Cross Piloted

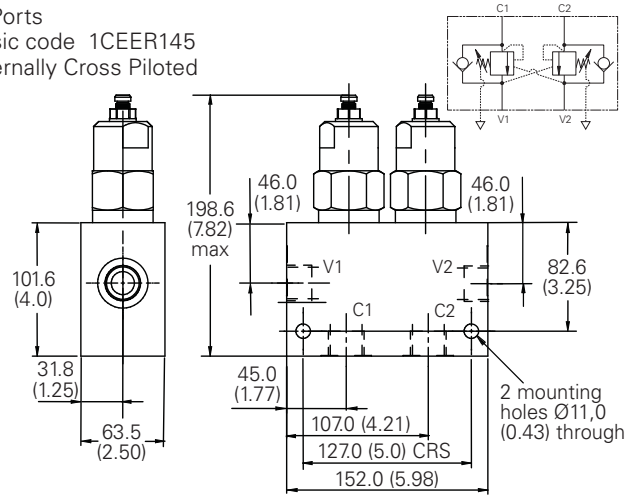

Where measurements are critical request certified drawings. We reserve the right to change specifications without notice.

1CEL140 - Overcenter valve

Counterbalance, pilot assisted relief with check
140 L/min (37 USgpm) • 380 bar (5510 psi)

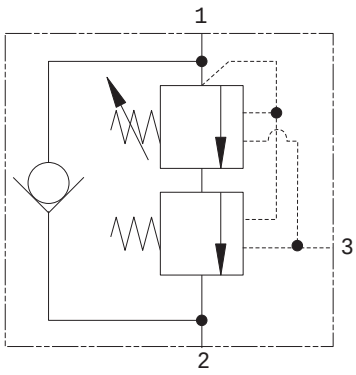

Operation

The check section allows free flow and then locks the load against movement. The pilot assisted relief valve section will give controlled movement when pilot pressure is applied, maintaining a counterbalance pressure to prevent initial pressure loss and therefore instability. The total pressure setting will normally be set at 1.3 times the load induced pressure. The counterbalance pressure reduces as the pilot pressure increases.

Features

Cartridge is economical and fits simple cavity. Allows quick, easy field service - reduces down time. Interchangeable with pilot check valve of a similar size.

Pilot ratio

Primary 6.1:1

Secondary 0.5:1

Performance data

Ratings and specifications

Figures based on: Oil Temp = 40°C Viscosity = 32 cSt (150 SUS)	
Rated flow	140 L/min (37 USgpm)
Max setting	380 bar (5510 psi)
Cartridge material	Working parts hardened and ground steel. External surfaces zinc plated.
Standard housing material	Aluminum (up to 210 bar). Add suffix "377" for steel option.
Mounting position	Unrestricted
Cavity number	A20081
Torque cartridge into cavity	150 Nm (110 lbs ft)
Weight	1CEL140 1.2 kg (2.6 lbs) 1CEL145 (aluminium) 2.2 kg (4.8 lbs) 1CEL145 (steel) 4.0 kg (8.8 lbs) 1CEEL145 (aluminium) 2.9 kg (6.4 lbs) 1CEEL145 (steel) 6.0 kg (13.2 lbs)
Seal kit number	SK1108 (Nitrile) SK1108V (Viton®)
Recommended filtration level	BS5540/4 Class 18/13 (25 micron nominal)
Operating temperature	-30° to +90°C (-22° to +194°F)
Leakage	0.3 milliliters/min nominal (5 dpm)
Nominal viscosity range	5 to 500 cSt

Viton is a registered trademark of E.I. DuPont.

Sectional view

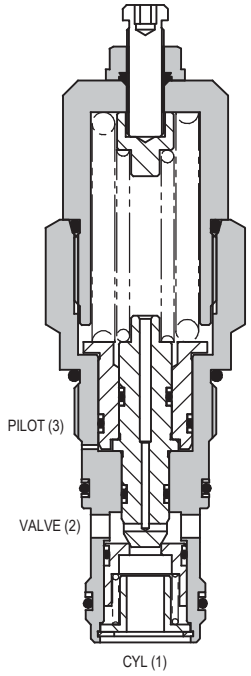

Description

The 1CEL overcenter valve performs all duties of a regular overcenter but maintains a counterbalance pressure to provide dampening of cylinders when there is a rapid loss in stored pressure. This counterbalance pressure reduces as the pilot pressure increases. Typical applications include extension cylinders on telescopic handlers where it is important to have a smooth operation when retracting from full extension.

Pressure drop

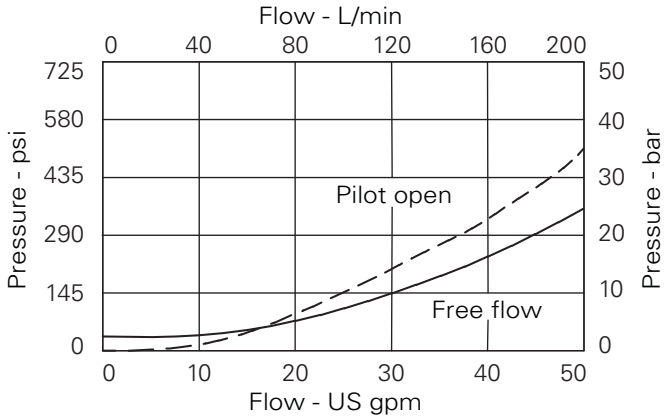

Note: This valve has been designed to eliminate instability from flexible boom applications or where the load induced pressure varies greatly. To get the best results, the settings should be adjusted for each application and then factory set for production quantities. Please contact Eaton/ Integrated Hydraulics for more information.

Where measurements are critical request certified drawings. We reserve the right to change specifications without notice.

Model code

1CEL* – F 6W – 30 S 220 / 60**

1 2 3 4 5 6 7

1 Function

1CEL140 - Cartridge Only

1CEL145 - Cartridge and Body

1CEEL145 - Cartridges and Body

2 Adjustment means counterbalance setting

F - Screw Adjustment

3 Port sizes

Code	Port size	Housing number - body only			
		Aluminium single	Steel single	Aluminium dual	Steel dual
6W	3/4" BSP Valve & Cyl Port. 1/4" BSP Pilot Port	B20105	B20106		
8W	1" BSP Valve & Cyl Port. 1/4" BSP Pilot Port	B20107	B20108	C20285	C20287
16T	1" SAE Valve & Cyl Port. 1/4" SAE Pilot Port	B11946	B11947	C30105	C30106

4 Pressure Range @ 4.8 l/min

Note: Code based on pressure in bar.

20 - 170-320. Std 220 (160/60)

30 - 230-380. Std 280 (220/60)

40 - 310-380. Std 350 (290/60)

5 Seals

S - Nitrile (For use with most industrial hydraulic oils)

SV - Viton (For high temperature and most special fluid applications)

6 High pressure setting bar

(10 bar increments).
150 to 350 bar
(2175 to 5000 psi)

7 Counterbalance setting bar

(10 bar increments).
20 to 100 bar (300 to 1500 psi)

Dimensions

mm (inch)

Cartridge only
Basic Code
1CEL140

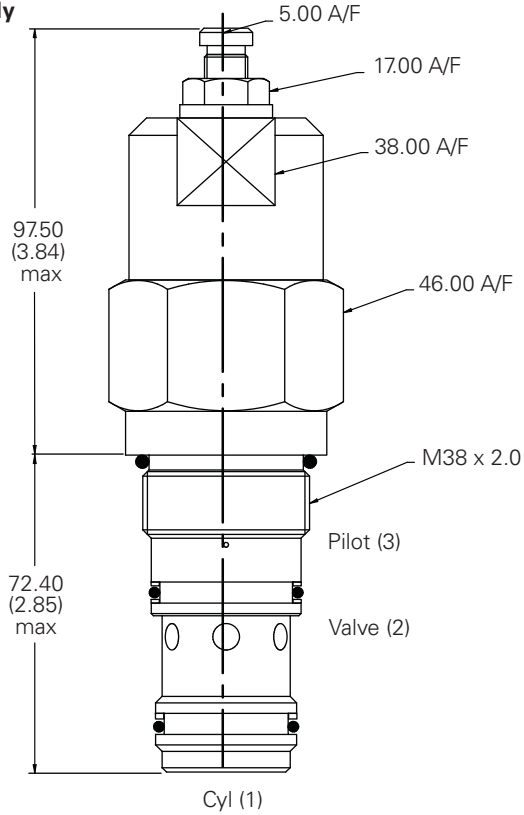

Note: For applications above 210 bar - please consult our technical department or use the steel body option.

Note: Tightening torque of "F" adjuster locknut - 20 to 25 Nm.

Single valve
3/4" , 1" Ports
Basic Code
1CEL145

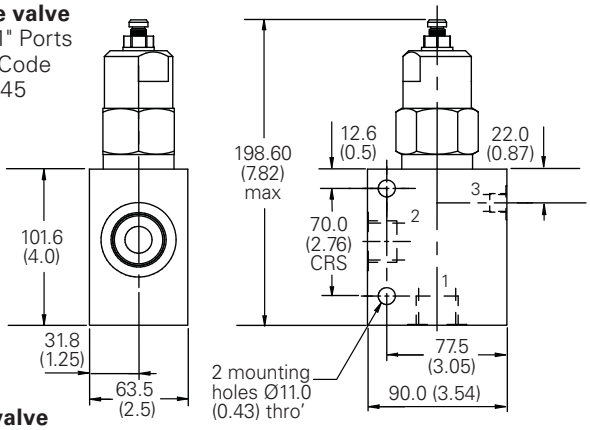

Dual valve
1" Ports
Basic code 1CEEL145
Internally Cross Piloted

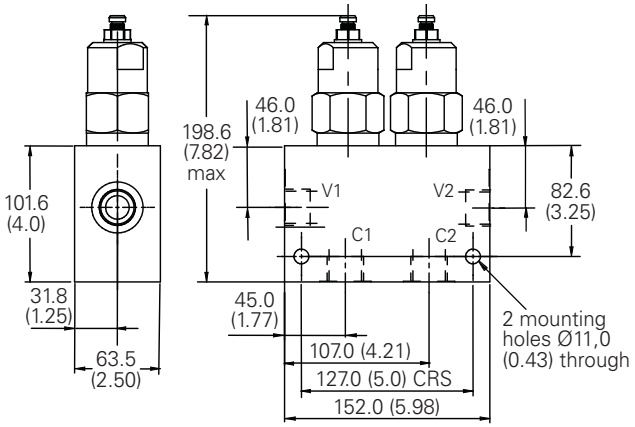

Where measurements are critical request certified drawings. We reserve the right to change specifications without notice.

1CE300 - Overcenter valve

Pilot assisted relief with check
300 L/min (80 USgpm) • 270 bar (4000 psi)

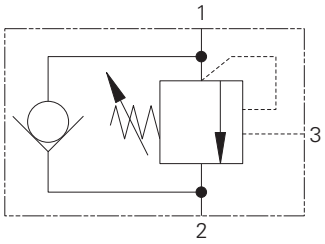

Sectional view

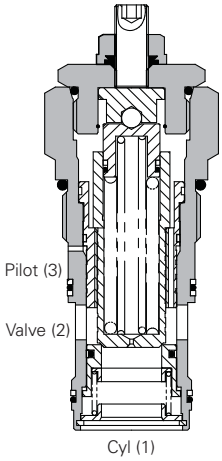

Description

Overcenter valves give static and dynamic control of loads by regulating the flow into and out of hydraulic actuators. When installed close to or within an actuator, the overcenter valve will stop runaway in the event of hose burst and if open center directional control valves are used, will allow thermal expansion relief of the hydraulic fluid.

The overcenter cartridge is ideal for mounting directly into a cavity machined in the body of the cylinder, motor or rotary actuator. The cartridge can also be mounted directly to the ports via a specifically machined body as part of a Hydraulic Integrated Circuit or single unit, or contained within one of our standard line bodies.

Single overcenter valves are normally used when the load is unidirectional, for example an aerial platform or crane and dual overcenter valves are used for controlling loads in both directional for motor applications or for cylinders going over center.

Operation

The check section allows free flow into the actuator then holds and locks the load against movement. The pilot assisted relief valve section will give controlled movement when pilot pressure is applied. The relief section is normally set to open at a pressure at least 1.3 times the maximum load induced pressure but the pressure required to open the valve and allow movement depends on the pilot ratio of the valve. For optimization of load control and energy usage, a choice of pilot ratios is available.

The pressure required to open the valve and start actuator movement can be calculated as follows:

$$\text{Pilot Pressure} = \frac{\text{(Relief Setting) - (Load Pressure)}}{\text{Pilot Ratio}}$$

Features

Cartridge is economical and fits simple cavity. Allows quick, easy field service - reduces down time. Interchangeable with pilot check valve of a similar size.

Pilot ratio

3:1 Best suited for applications where load varies and machine structure can induce instability.

8:1 Best suited for applications where the load remains relatively constant.

Performance data

Ratings and specifications

Figures based on: Oil Temp = 40°C Viscosity = 32 cSt (150 SUS)	
Rated flow	300 L/min (80 USgpm)
Max relief pressure	350 bar (5000 psi)
Max load induced pressure	270 bar (4000 psi)
Cartridge material	Working parts hardened and ground steel. External surfaces zinc plated.
Standard housing material	Alumiium (up to 210 bar). Add suffix "377" for steel option.
Mounting position	Unrestricted
Cavity	A6935 (See Section M)
Torque cartridge into cavity	150 Nm (110 lbs ft)
Weight cartridge only	1CE300 0.91 kg (2.00 lbs) 1CE350 2.71 kg (5.96 lbs) 1CEE350 5.42 kg (11.92 lbs)
Seal kit	SK437 (Nitrile) SK437V (Viton®)
Filtration	BS5540/4 Class 18/13 (25 micron nominal)
Temperature range	-30°C to +90°C (-22° to +194°F)
Internal leakage	4 milliliters/min nominal (60 dpm)
Nominal viscosity range	5 to 500 cSt

Viton is a registered trademark of E.I. DuPont.

Pressure drop

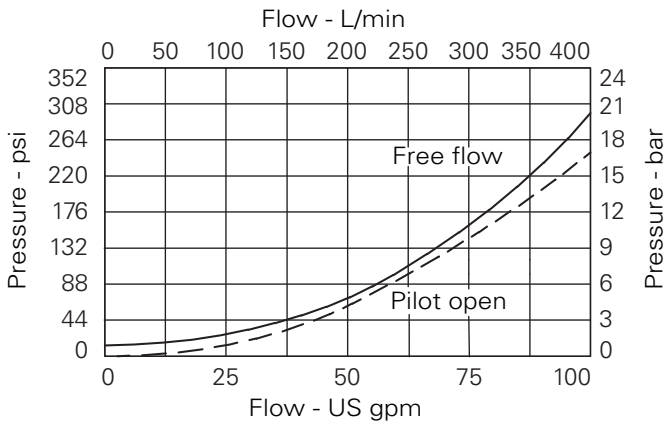

Where measurements are critical request certified drawings. We reserve the right to change specifications without notice.

Model code

1CE** – F 10W – 35 S 3**

1 2 3 4 5 6

1 Function

1CE300 - Cartridge only

1CE350 - Cartridge and Body

1CEE350 - Cartridges and Body

2 Adjustment

F - Screw adjustment

3 Port size

Code	Port size	Housing number - body only			
		Aluminium single	Steel single	Aluminium dual	Steel dual
10W	1 1/4" BSP Valve & Cyl Port 1/4" BSP Pilot Port	B6814	B8610	C8704	C8705
20T	1 1/4" SAE Valve & Cyl Port 1/4" SAE Pilot Port	B10630	B11474	C10811	C11564

4 Pressure range

Note: Code based on pressure in bar.

35 - 70-350 bar.

Std setting 210 bar

Std setting made at 4.8 L/min

5 Seal material

S - Buna-N

SV - Viton

6 Pilot ratio

3 - 3:1 - (Standard)

8 - 8:1

Dimensions

mm (inch)

Cartridge only
Basic Code
1CE300

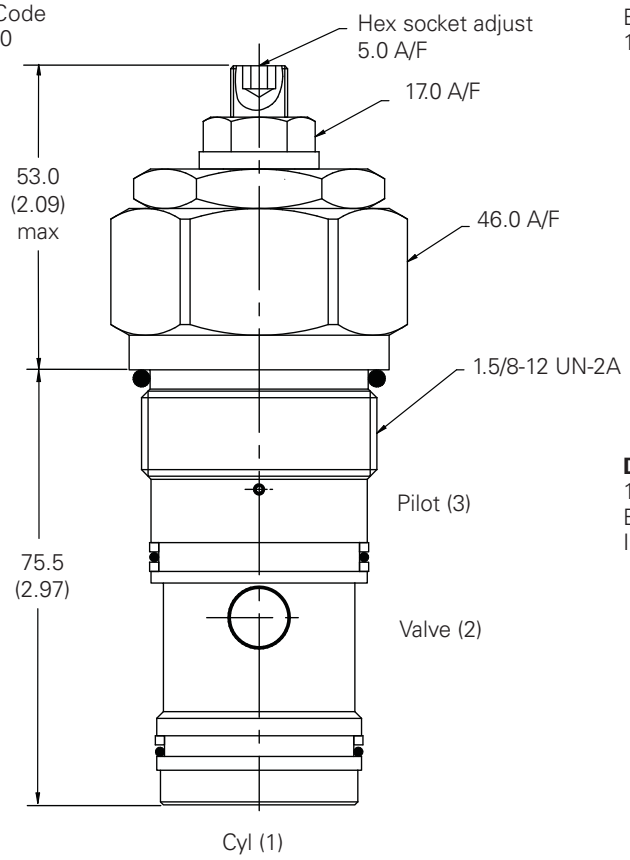

Single valve
1 1/4" Ports
Basic Code
1CE350

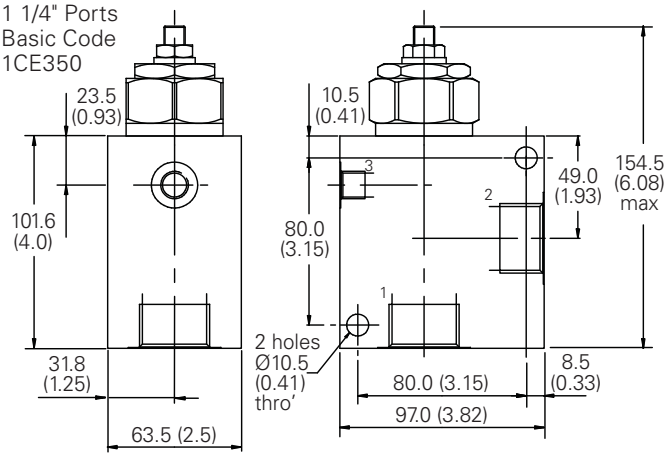

Dual valve
1 1/4" Ports
Basic code 1CEE350
Internally Cross Piloted

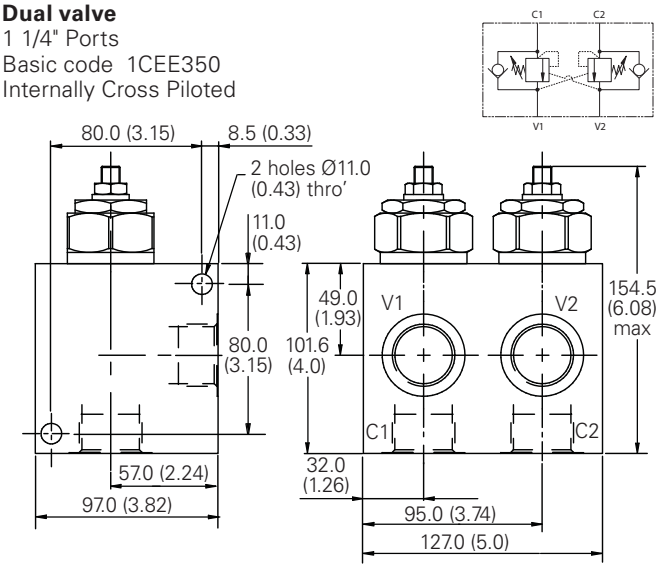

Note: For applications above 210 bar - please consult our technical department or use the steel body option.

Note: Tightening torque of "F" adjuster locknut - 20 to 25 Nm.

Where measurements are critical request certified drawings. We reserve the right to change specifications without notice.

F

1CEB300 - Overcenter valve

Fully balanced, pilot assisted
300 L/min (80 USgpm) • 270 bar (4000 psi)

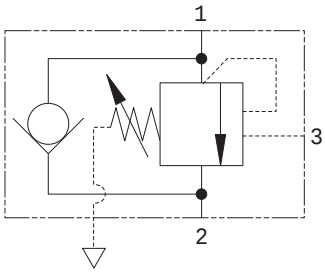

Sectional view

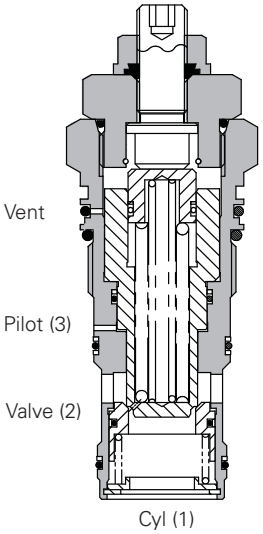

Description

Overcenter valves give static and dynamic control of loads by supplying a counterbalance pressure to the actuator. They prevent runaway in the event of hose burst and hold the load with minimal leakage.

The pressure balanced valve is unaffected by back pressure, allowing service line reliefs to operate and for the valve to be used in regenerative or proportional valve systems.

The overcenter valve should be mounted either into, onto or as close to the actuator as possible to give maximum protection.

Single overcenter valves control unidirectional loads such as in aerial platforms, cranes or winches and dual overcenters are suited to bi-directional motion such as wheel motor applications or cylinders going over center.

Operation

The check section allows free flow into the actuator then holds and locks the load against movement. The pilot assisted relief valve section will give controlled movement when pilot pressure is applied. The relief section is normally set to open at a pressure at least 1.3 times the maximum load induced pressure but the pressure required to open the valve and allow movement depends on the pilot ratio of the valve. For optimization of load control and energy usage, a choice of pilot ratios is available.

The pressure required to open the valve and start actuator movement can be calculated as follows:

$$\text{Pilot Pressure} = \frac{\text{(Relief Setting) - (Load Pressure)}}{\text{Pilot Ratio}}$$

Features

Cartridge is economical and fits simple cavity. Allows quick, easy field service - reduces down time. Interchangeable with pilot check valve of a similar size.

Pilot ratio

3:1 Best suited for applications where load varies and machine structure can induce instability.

8:1 Best suited for applications where the load remains relatively constant.

Performance data

Ratings and specifications

Figures based on: Oil Temp = 40°C Viscosity = 32 cSt (150 SUS)	
Rated flow	300 L/min (80 USgpm)
Max working pressure	350 bar (5000 psi)
Max load induced pressure	270 bar (4000 psi)
Cartridge material	Working parts hardened and ground steel. External surfaces zinc plated.
Standard housing material	Aluminium (up to 210 bar) Add suffix "377" for steel option
Mounting position	Unrestricted
Cavity	A6935 (See Section M)
Torque cartridge into cavity	150 Nm (110 lbs ft)
Weight cartridge only	1CE300 0.91 kg (2.00 lbs) 1CE350 2.71 kg (5.96 lbs) 1CEE350 5.42 kg (11.92 lbs)
Seal kit	SK686 (Nitrile) SK686V (Viton®)
Filtration	BS5540/4 Class 18/13 (25 micron nominal)
Temperature range	-30°C to +90°C (-22° to +194°F)
Internal leakage	4 milliliters/min nominal (60 dpm)
Nominal viscosity range	5 to 500 cSt

Viton is a registered trademark of E.I. DuPont.

Pressure drop

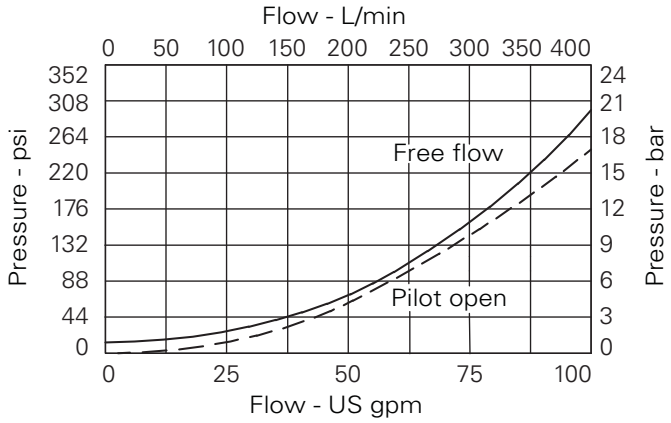

Where measurements are critical request certified drawings. We reserve the right to change specifications without notice.

Model code

1CE*****	–	F	10W	–	35	S	3
1		2	3		4	5	6

1 Basic code

1CEB300 - Cartridge only

1CEB350 - Cartridge and Body

1CEEB350 - Cartridges and Body

2 Adjustment means

F - Screw adjustment

3 Port sizes

Code	Port size	Housing number - body only			
		Aluminium single	Steel single	Aluminium dual	Steel dual
10W	1 1/4" BSP Valve & Cyl Port 1/4" BSP Pilot Port	B6814	B8610	C8704	C8705
20T	1 1/4" SAE Valve & Cyl Port 1/4" SAE Pilot Port	B10630	B11474	C10811	C11564

4 Pressure Range @4.8 L/min

Note: Code based on pressure in bar.

35 - 70-350 bar.
Std setting 210 bar

Std setting made at 4.8 L/min

5 Seals

S - Nitrile (For use with most industrial hydraulic oils)

SV - Viton (For high temperature and most special fluid applications)

6 Pilot ratio

3 - 3:1 - (Standard)

8 - 8:1

Dimensions

mm (inch)

Cartridge only
Basic Code
1CEB300

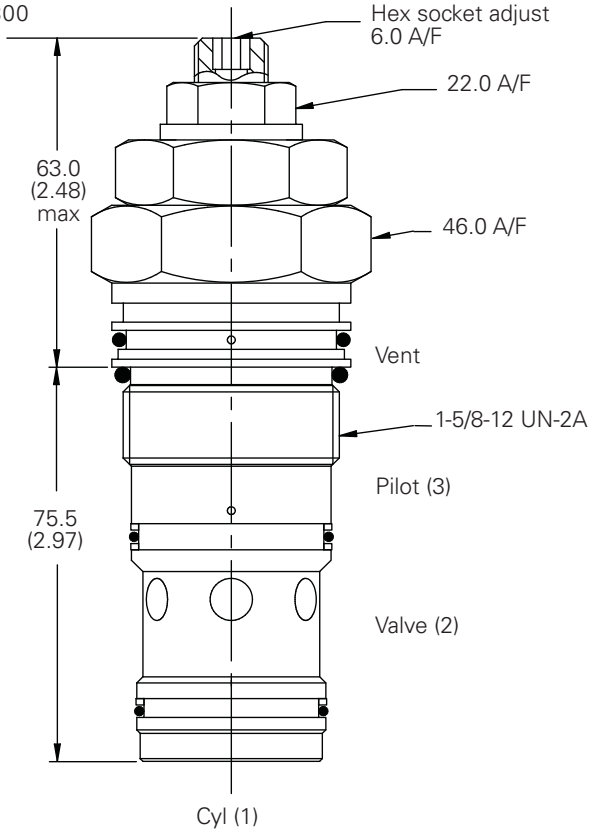

Note: Tightening torque of "F" adjuster locknut - 20 to 25 Nm.

Note: For applications above 210 bar - please consult our technical department or use the steel body option.

Single valve
1 1/4" Ports
Basic Code
1CEB350

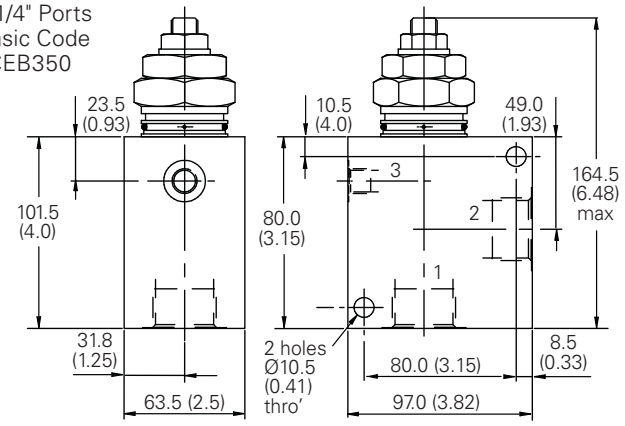

Dual valve
1 1/4" Ports
Basic Code 1CEEB350
Internally Cross Piloted

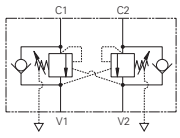

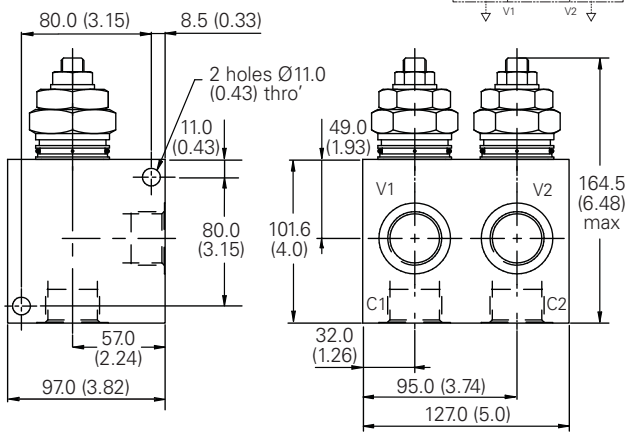

Where measurements are critical request certified drawings. We reserve the right to change specifications without notice.

1CEBD300 - Overcenter valve

Fully balanced, pilot assisted relief with check
300 L/min (80 USgpm) • 270 bar (4000 psi)

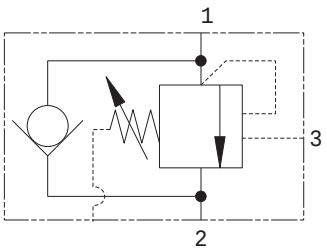

Sectional view

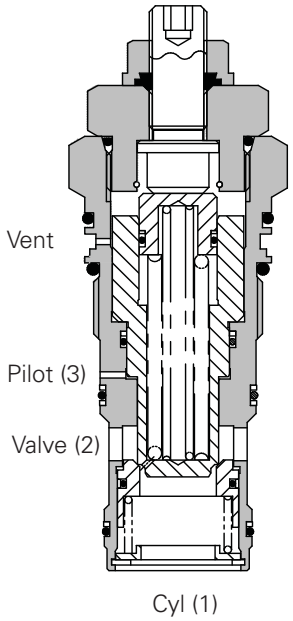

Description

Overcenter valves give static and dynamic control of loads by supplying a counterbalance pressure to the actuator. They prevent runaway in the event of hose burst and hold the load with minimal leakage.

The pressure balanced valve is unaffected by back pressure, allowing service line reliefs to operate and for the valve to be used in regenerative or proportional valve systems.

The overcenter valve should be mounted either into, onto or as close to the actuator as possible to give maximum protection.

Single overcenter valves control unidirectional loads such as in aerial platforms, cranes or winches and dual overcenters are suited to bi-directional motion such as wheel motor applications or cylinders going over center.

Operation

"The check section allows free flow into the actuator then holds and locks the load against movement. The pilot assisted relief valve section will give controlled movement when pilot pressure is applied. The relief section is normally set to open at a pressure at least 1.3 times the maximum load induced pressure but the pressure required to open the valve and allow movement depends on the pilot ratio of the valve. For optimization of load control and energy usage, a choice of pilot ratios is available.

The pressure required to open the valve and start actuator movement can be calculated as follows:

$$\text{Pilot Pressure} = \frac{\text{(Relief Setting) - (Load Pressure}}{\text{Pilot Ratio}}$$

Features

Cartridge is economical and fits simple cavity. Allows quick, easy field service - reduces down time.

Pilot ratio

3:1 Best suited for applications where load varies and machine structure can induce instability.

8:1 Best suited for applications where the load remains relatively constant.

Performance data

Ratings and specifications

Figures based on: Oil Temp = 40°C Viscosity = 32 cSt (150 SUS)	
Rated flow	300 L/min (80 USgpm)
Max relief pressure	350 bar (5000 psi)
Max load induced pressure	270 bar (4000 psi)
Cartridge material	Working parts hardened and ground steel. External surfaces zinc plated.
Mounting position	Unrestricted
Cavity	A13098 (See Section M)
Torque cartridge into cavity	150 Nm (110 lbs ft)
Weight cartridge only	0.91 kg (2.00 lbs)
Seal kit	SK686 (Nitrile) SK686V (Viton®) SK686P (Polyurethane Nitrile)
Filtration	BS5540/4 Class 18/13 (25 micron nominal)
Temperature range	-30° to +90°C (-22° to +194°F)
Internal leakage	4 milliliters/min (60 dpm)
Nominal viscosity range	5 to 500 cSt

Viton is a registered trademark of E.I. DuPont.

Pressure drop

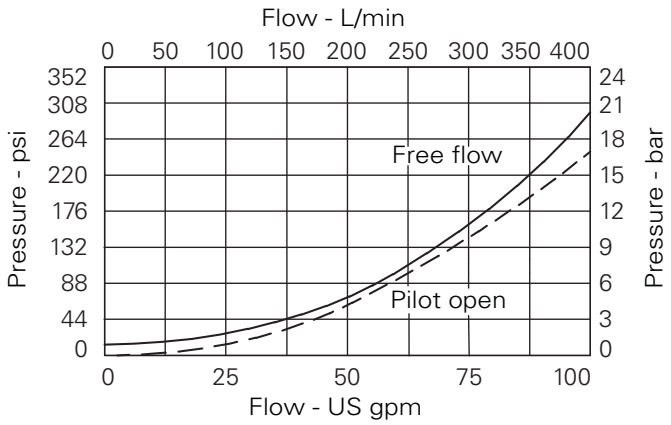

Where measurements are critical request certified drawings. We reserve the right to change specifications without notice.

Model code

1CEBD300 – F – 35 S 3

1 2 3 4 5

1 Basic Code

1CEBD300 - Cartridge only

2 Adjustment

F - Screw adjustment

3 Pressure range @4.8 L/min

Note: Code based on pressure in bar.

35 - 70-350 bar.
Std setting 210 bar

Std setting made at 4.8 L/min

4 Seals

S - Nitrile (For use with most industrial hydraulic oils)

SV - Viton (For high temperature and most special fluid applications)

P - Polyurethane/Nitrile (For arduous applications)

5 Pilot ratio

3 - 3:1 - (Standard)

8 - 8:1

Dimensions

mm (inch)

Cartridge only
Basic Code
1CEBD300

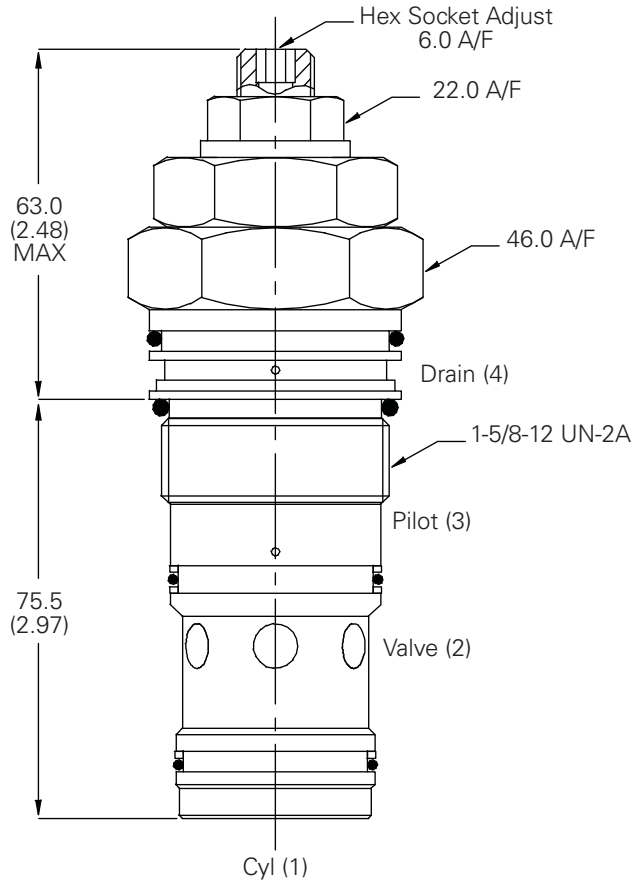

Note: Tightening torque of "F" adjuster locknut - 20 to 25 Nm.

F

1CPBD300 - Overcenter valve

Zero differential with check
300 L/min (80 USgpm) • 400 bar (5800 psi)

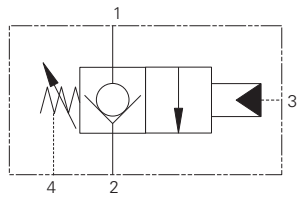

Operation

The check section allows free flow into the actuator then holds and locks the load against movement. By the application of pilot pressure to the pilot port the poppet moves back against the main spring opening the cylinder port to the valve port. The metering characteristic of the valve is controlled by the rate of the spring, the seat angle and the pilot pressure applied.

Due to the balanced poppet design load induced pressure will not open the valve and once open valve port pressure will not increase the pilot pressure required to keep the valve open.

Features

The cartridge fits a simple cavity allowing quick, easy field service reducing down time. Hardened poppet and seat provide for long leak free performance.

Sectional view

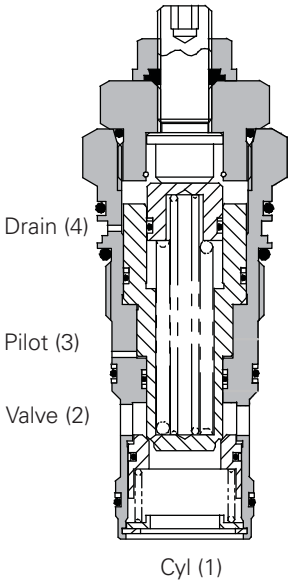

Performance data

Ratings and specifications

Figures based on: Oil Temp = 40°C Viscosity = 32 cSt (150 SUS)	
Rated flow	300 L/min (80 USgpm)
Max working pressure	400 bar (5800 psi)
Cartridge material	Working parts hardened and ground steel. External surfaces zinc plated.
Mounting position	Unrestricted
Cavity	A13098 (See Section M)
Torque cartridge into cavity	150 Nm (110 lbs ft)
Weight cartridge only	0.91 kg (2.00 lbs)
Seal kit	SK971 (Nitrile) SK971V (Viton®) SK971P (Polyurethane/Nitrile)
Filtration	BS5540/4 Class 18/13 (25 micron nominal)
Temperature range	-30° to +90°C (-22° to +194°F)
Internal leakage	4 milliliters/min nominal (60 dpm)
Nominal viscosity range	5 to 500 cSt
Bar per turn	5 bar

Viton is a registered trademark of E.I. DuPont.

Pressure drop

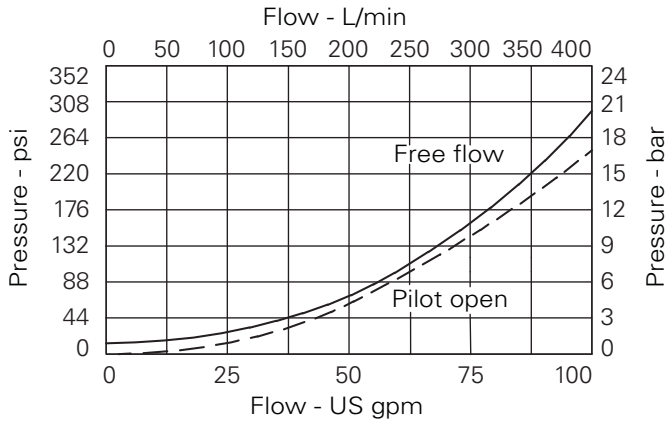

Description

Zero differential overcenter valves give static and dynamic control of loads by supplying a restriction to flow related to the opening of the valve created by the pilot pressure.

The valve is used in conjunction with a remote pilot source to provide hose failure protection, load control and load holding functions.

If over-pressure or shock pressure protection is required then a separate relief valve should be used.

The drain line allows the valve to be used in corrosive atmospheres preventing the ingress of atmospheric contaminant.

Where measurements are critical request certified drawings. We reserve the right to change specifications without notice.

Model code

1CPBD300	F	2	P
1	2	3	4

1 Function

1CEBD300 - Cartridge only

2 Adjustment

F - Screw adjustment

3 Pilot adjust range

Note: Code based on pressure in bar.

2 - 5-20 bar. Std setting 10 bar

Std setting made at 4.8 L/min

4 Seal material

S - Nitrile (For use with most industrial hydraulic oils)

SV - Viton® (For high temperature and most special fluid applications)

P - Polyurethane/Nitrile (For arduous applications)

Dimensions

mm (inch)

Cartridge only
Basic Code
1CPBD300

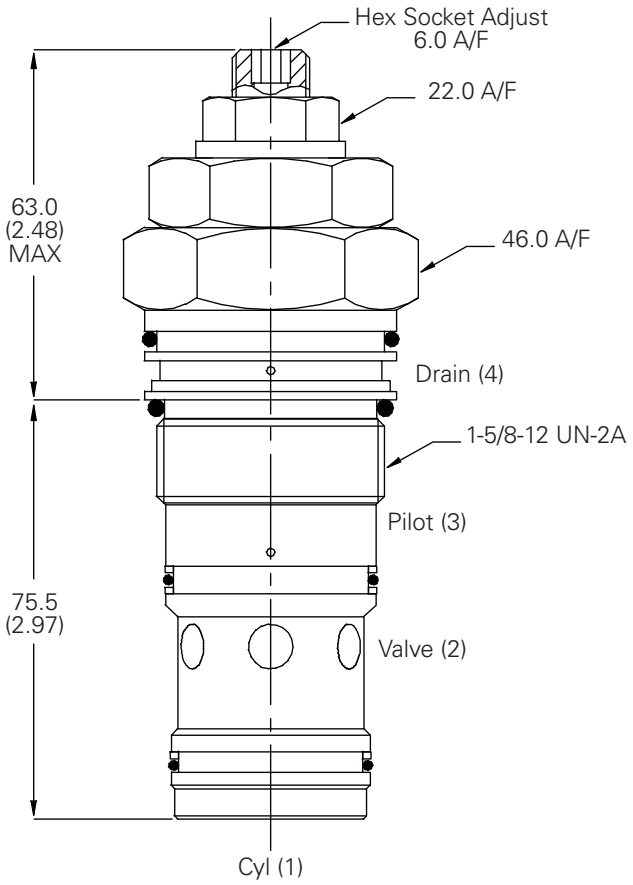

Note: Tightening torque of "F" adjuster locknut - 20 to 25 Nm.

F

1CPPD300 - Piloted Bi-directional poppet valve

Poppet, pilot operated, normally closed, zero differential
300 L/min (80 USgpm) • 350 bar (5000 psi)

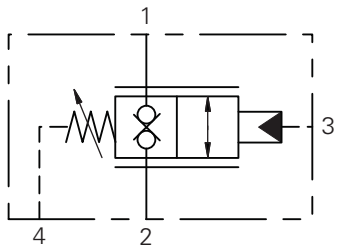

Operation

By the application of pilot pressure to the pilot port the poppet moves back against the main spring opening. The metering characteristic of the valve is controlled by the rate of the spring, the seat angle and the pilot pressure applied.

Due to the balanced poppet design load induced pressure will not open the valve and once open valve port pressure will not increase the pilot pressure required to keep the valve open.

Features

The cartridge fits a simple cavity allowing quick, easy field service reducing down time. Hardened poppet and seat provide for long leak free performance.

Sectional view

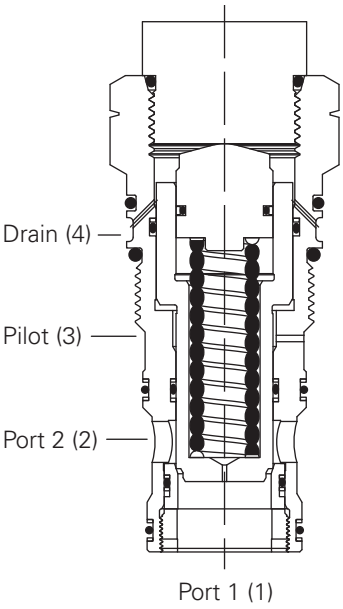

Performance data

Ratings and specifications

Figures based on: Oil Temp = 40°C Viscosity = 32 cSt (150 SUS)	
Rated flow	300 L/min (80 USgpm)
Max working pressure	350 bar (5000 psi)
Cartridge material	Working parts hardened and ground steel. External surfaces Nickel / Zinc plated.
Mounting position	Unrestricted
Cavity	A13098 (See Section M)
Torque cartridge into cavity	150 Nm (110 lbs ft)
Weight cartridge only	1.02 kg (2.25 lbs)
Seal kit	SK1454 (Nitrile) SK1454V (Viton®) SK1454P (Polyurethane/Nitrile)
Filtration	BS5540/4 Class 18/13 (25 micron nominal)
Temperature range	-30° to +90°C (-22° to +194°F)
Internal leakage	4 milliliters/min nominal (60 dpm)
Nominal viscosity range	5 to 500 cSt

Viton is a registered trademark of E.I. DuPont.

Description

Normally closed pilot operatedzero differential bi directional poppet valve providing flow control by application of pilot pressure to actuate the poppet and increase the flow path

Balanced construction ensures predictable switching regardless of pressure in port 1 or 2. The drain line allows the valve to be used in corrosive atmospheres preventing the ingress of atmospheric contamination.

Pilot open pressure drop - both directions

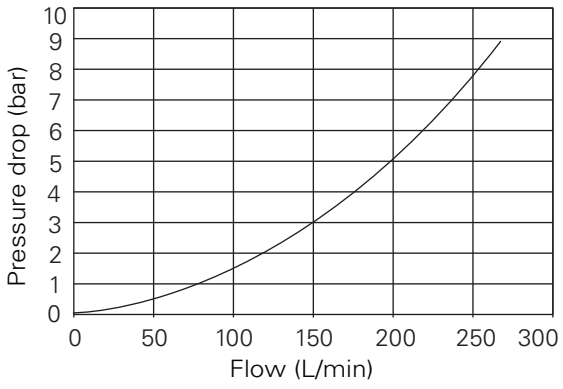

Where measurements are critical request certified drawings. We reserve the right to change specifications without notice.

1CPPD300 - Piloted Bi-directional poppet valve

Poppet, pilot operated, normally closed, zero differential
300 L/min (80 USgpm) • 350 bar (5000 psi)

Model code

1CPPD300	N	2	P
1	2	3	4

1 Function

1CPPD300 - Cartridge only

2 Adjustment

N - Fixed - State pressure setting required

3 Pilot pressure

Note: Code based on pressure in bar.

2 - 14 bar.

Std setting made at 4.8 L/min

4 Seal material

S - Nitrile (For use with most industrial hydraulic oils)

SV - Viton® (For high temperature and most special fluid applications)

P - Polyurethane/Nitrile (For arduous applications)

Dimensions

mm (inch)

Cartridge only
Basic Code
1CPPD300

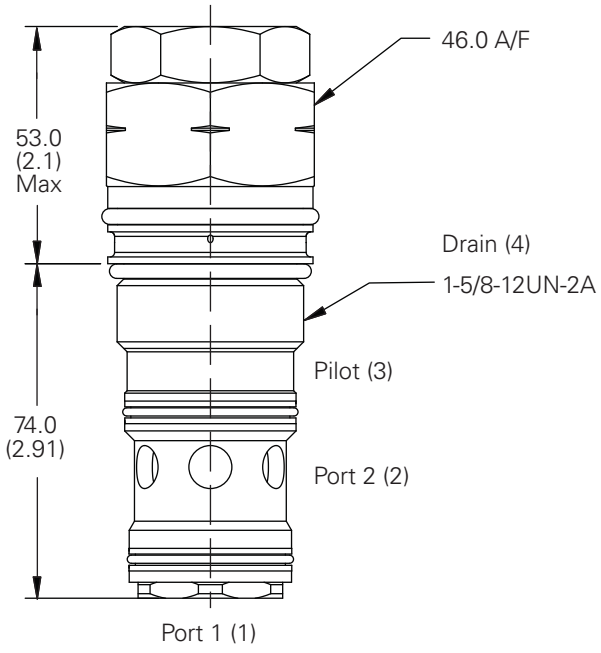

F

1CE356 Series - Overcenter valve

Alternative body arrangements for 300 L/min valves

Model code

1CE****	F	10W	35	S	3
1	2	3	4	5	6

1 Function

1CE356 - Cartridge and Body Through Ported

1CEG350 - Cartridge and Body Gasket Mounted

2 Adjustment

F - Screw adjustment

3 Port size - bodied valves only

Code	Port size	Housing number	
1CE356 Through Ported, Body Only		**Aluminium**	**Steel**
10W	1 1/4" BSP Valve & Cyl Port 1/4" BSP Pilot Port	C13637	C13638
1CEG356 Gasket Mounted, Sub Assembly			
10W	1 1/4" BSP Valve & Cyl Port 1/4" BSP Pilot Port	CXP20647-10W-S	CXP20647-10W-S-377

4 Pressure range

Note: Code based on pressure in bar.

35 - 70-350 bar.
Std setting 210 bar
(10:1): 100-210 bar

Std setting made at 4.8 L/min

5 Seal material

S - Buna-N

SV - Viton

6 Pilot ratio

3 - 3:1 - (Standard)

8 - 8:1

F

Dimensions

mm (inch)

Complete valve - through ported
1 1/4" Ports
Basic Code
1CE356

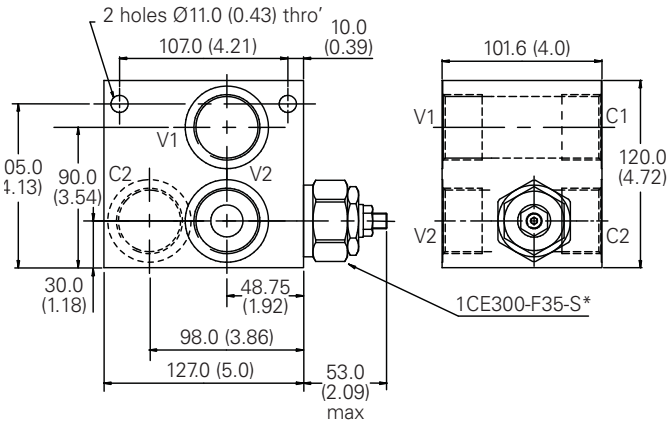

Complete valve - gasket mounted
1 1/4" Ports
Basic Code
1CEG350

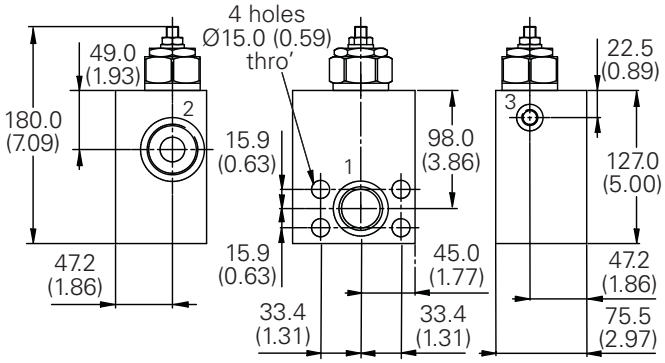

Note: For applications above 210 bar - please consult our technical department or use the steel body option.

Note: Tightening torque of "F" adjuster locknut - 20 to 25 Nm.

Where measurements are critical request certified drawings. We reserve the right to change specifications without notice.

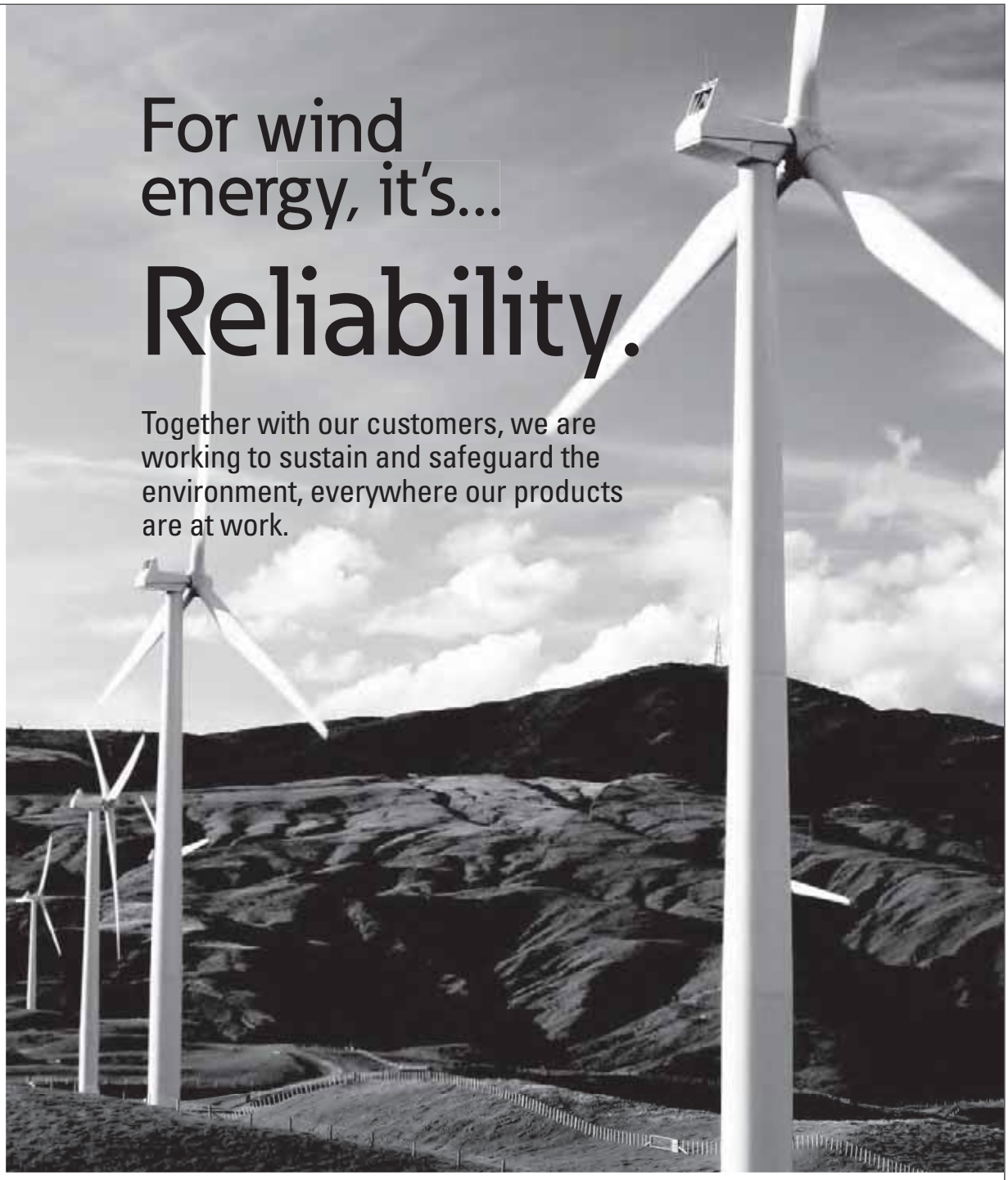

EATON
Powering Business Worldwide

Durability. Reliability. Sustainability.

Eaton's integrated systems help harvest the inexhaustible green power of wind. In constant use under the harshest conditions, wind turbines demand extreme reliability and durability from every component. Eaton is a world leading manufacturer of those critical hydraulic, electrical and filtration products.

©2008 Eaton Corporation

Where measurements are critical request certified drawings. We reserve the right to change specifications without notice.

1SE30 - Overcenter valve

Pilot assisted relief with check
30 L/min (8 USgpm) • 270 bar (4000 psi)

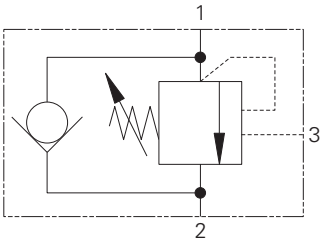

Sectional view

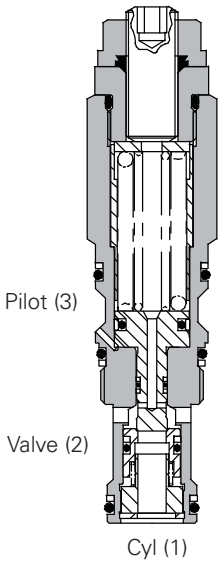

Description

Overcenter valves give static and dynamic control of loads by regulating the flow into and out of hydraulic actuators. When installed close to or within an actuator, the overcenter valve will stop runaway in the event of hose burst and if open center directional control valves are used, will allow thermal expansion relief of the hydraulic fluid.

The overcenter cartridge is ideal for mounting directly into a cavity machined in the body of the cylinder, motor or rotary actuator. The cartridge can also be mounted directly to the ports via a specifically machined body as part of a Hydraulic Integrated Circuit or single unit, or contained within one of our standard line bodies.

Single overcenter valves are normally used when the load is unidirectional, for example an aerial platform or crane and dual overcenter valves are used for controlling loads in both directional for motor applications or for cylinders going over center.

Operation

The check section allows free flow into the actuator then holds and locks the load against movement. The pilot assisted relief valve section will give controlled movement when pilot pressure is applied. The relief section is normally set to open at a pressure at least 1.3 times the maximum load induced pressure but the pressure required to open the valve and allow movement depends on the pilot ratio of the valve. For optimization of load control and energy usage, a choice of pilot ratios is available.

The pressure required to open the valve and start actuator movement can be calculated as follows:

$$\text{Pilot Pressure} = \frac{\text{(Relief Setting) - (Load Pressure)}}{\text{Pilot Ratio}}$$

Features

Cartridge is economical and fits simple cavity. Allows quick, easy field service - reduces down time. Interchangeable with pilot check valve of a similar size.

Pilot ratio

2.5:1 Best suited for extremely unstable applications such as long booms or flexible frameworks.

5:1 (standard) Best suited for applications where load varies and machine structure can induce instability.

10:1 Best suited for applications where the load remains relatively constant.

Performance data

Ratings and specifications

Figures based on: Oil Temp = 40°C Viscosity = 32 cSt (150 SUS)	
Rated flow	30 L/min (8 USgpm)
Max relief setting	350 bar (5000 psi)
Max load induced pressure	270 bar (4000 psi
Cartridge material	Working parts hardened and ground steel. External steel surfaces zinc plated.
Mounting position	Unrestricted
Cavity number	A20090-T11A
Torque cartridge into cavity	45 Nm (33 lbs ft)
Weight	0.15 kg (0.33 lbs)
Seal kit number	SK1079 (Nitrile) SK1079V (Viton®)
Recommended filtration level	BS5540/4 Class 18/13 (25 micron nominal)
Operating temperature	-30° to +90°C (-22° to +194°F)
Leakage	0.3 milliliters/min nominal (5 dpm)
Nominal viscosity range	5 to 500 cSt

Pressure drop

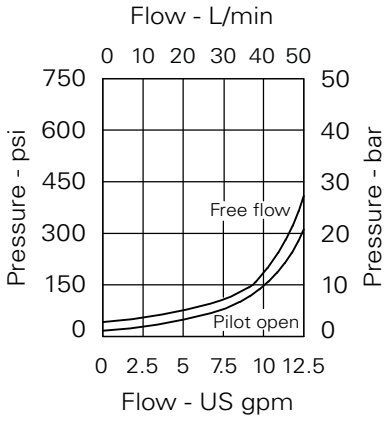

2:5:1 and 5:1 version

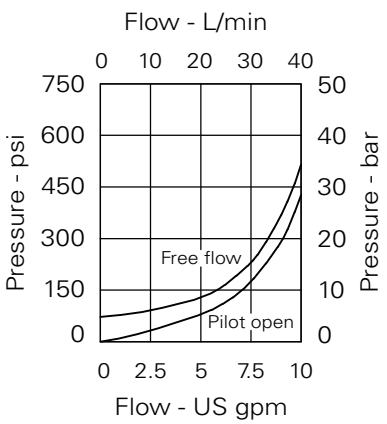

10:1 version

Where measurements are critical request certified drawings. We reserve the right to change specifications without notice.

Model code

1SE30 – F – 35 S 5

1 2 3 4 5

1 Function

1SE30

2 Adjustment means

F - Screw Adjustment

N - Fixed - State pressure setting required

For fixed versions add setting in 10 bar increments to end of part number. Subject to a ±10% tolerance.

3 Pressure range

Note: Code based on pressure in bar.h

20 - (All pilot ratios): 70-225 bar. Std setting 100 bar

35 - (2.5:1 and 5:1): 70-350 bar. Std setting 210 bar
(10:1): 90-350 bar. Std setting 210 bar

Std setting made at 4.8 L/min
Other pressure ranges available on request

4 Seals

S - Nitrile (For use with most industrial hydraulic oils)

SV - Viton (For high temperature and most special fluid applications)

5 Pilot ratio

2 - 2.5:1

5 - 5:1

10 - 10:1

Dimensions

mm (inch)

Cartridge only
Basic Code
1SE30

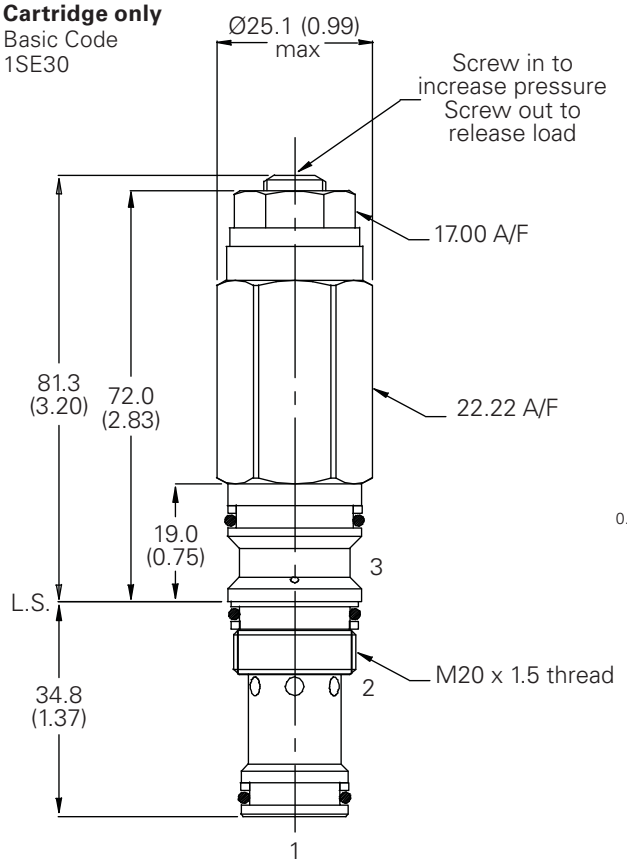

Note: Tightening torque of "F" adjuster locknut - 20 to 25 Nm.

Cavity

Model	A20090-
T11A	Form Drill
TD-11A	
Form Reamer	TD-11A

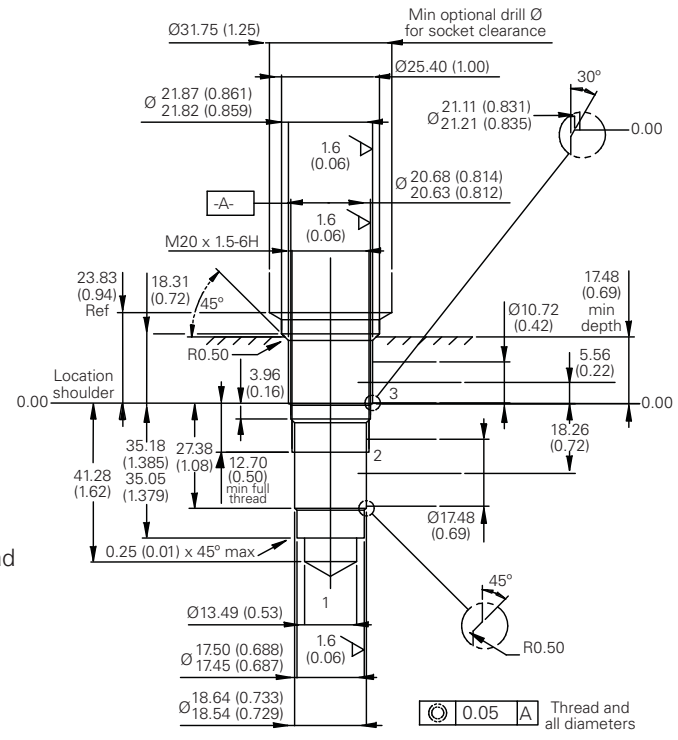

Where measurements are critical request certified drawings. We reserve the right to change specifications without notice.

1SER30 - Overcenter valve

Part balanced, pilot assisted relief with check
30 L/min (8 USgpm) • 270 bar (4000 psi)

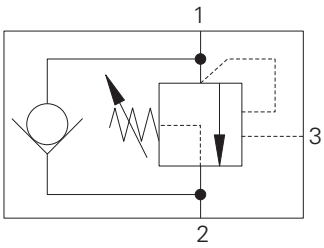

Sectional view

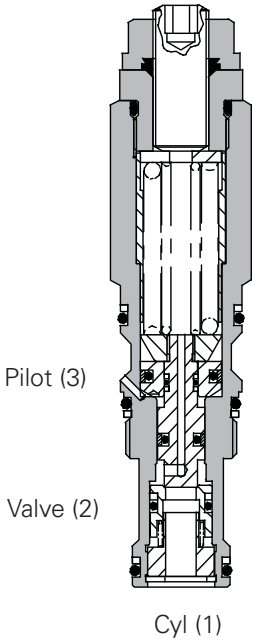

Description

The 1SER series overcenter valve performs all duties of a regular overcenter but is able to relieve and stay open irrespective of downstream pressure. This enables the valve to operate when used with a closed center directional valve which has service line reliefs. The poppet is pressure balanced, preventing relief setting increase due to back pressure.

Operation

The check section allows free flow into the actuator then holds and locks the load against movement. The pilot assisted relief valve section will give controlled movement when pilot pressure is applied. The relief section is normally set to open at a pressure at least 1.3 times the maximum load induced pressure but the pressure required to open the valve and allow movement depends on the pilot ratio of the valve. For optimization of load control and energy usage, a choice of pilot ratios is available.

The pressure required to open the valve and start actuator movement can be calculated as follows:

$$\text{Pilot Pressure} = \frac{\text{(Relief Setting) - (Load Pressure)}}{\text{Pilot Ratio}}$$

Features

Cartridge is economical and fits simple cavity. Allows quick, easy field service - reduces down time. Interchangeable with pilot check valve of a similar size.

Pilot ratio

4:1 Best suited for applications where load varies and machine structure can induce instability.

Performance data

Ratings and specifications

Figures based on: Oil Temp = 40°C Viscosity = 32 cSt (150 SUS)	
Rated flow	30 L/min (8 USgpm)
Max relief setting	350 bar (5000 psi)
Max load induced pressure	270 bar (4000 psi)
Cartridge material	Working parts hardened and ground steel. External steel surfaces zinc plated.
Mounting position	Unrestricted
Cavity number	A20090-T11A
Torque cartridge into cavity	45 Nm (33 lbs ft)
Weight	0.15 kg (0.33 lbs)
Seal kit number	SK1079 (Nitrile) SK1079V (Viton®)
Recommended filtration level	BS5540/4 Class 18/13 (25 micron nominal)
Operating temperature	-30° to +90°C (-22° to +194°F)
Leakage	0.3 milliliters/min nominal (5 dpm)
Nominal viscosity range	5 to 500 cSt

Viton is a registered trademark of E.I. DuPont.

Pressure drop

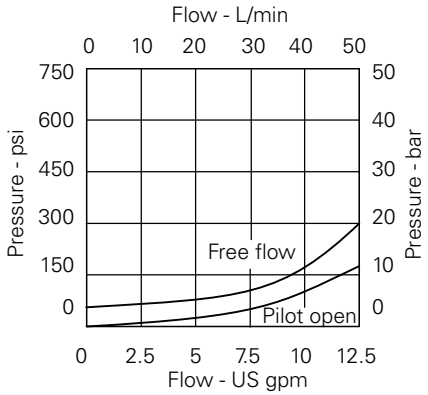

Where measurements are critical request certified drawings. We reserve the right to change specifications without notice.

Model code

1SER30 – F – 35 S 4

1 2 3 4 5

1 Function
1SER30

2 Adjustment means
F - Screw Adjustment

N - Fixed - State pressure setting required

For fixed versions add setting in 10 bar increments to end of part number. Subject to a ±10% tolerance.

3 Pressure range @ 4.8 L/min
Note: Code based on pressure in bar.

35 - 75-350 bar
Std setting 210 bar
Std setting made at 4.8 L/min

4 Seals
S - Nitrile
(For use with most industrial hydraulic oils)

SV - Viton (For high temperature and most special fluid applications)

5 Pilot ratio
4 - 4:1

Dimensions
mm (inch)

Cartridge only
Basic Code
1SER30

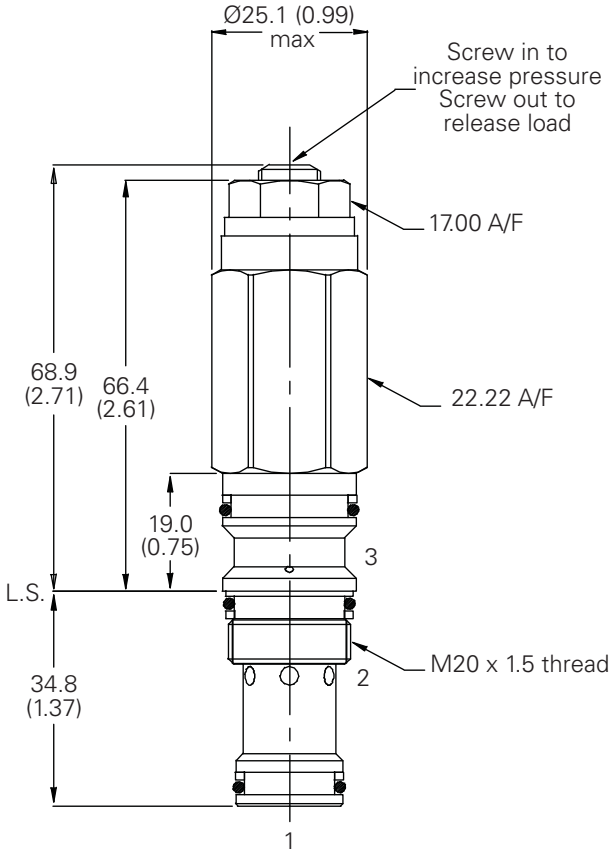

Note: Tightening torque of "F" adjuster locknut - 20 to 25 Nm.

Cavity
Model A20090-T11A
Form Drill TD-11A
Form Reamer TR-11A

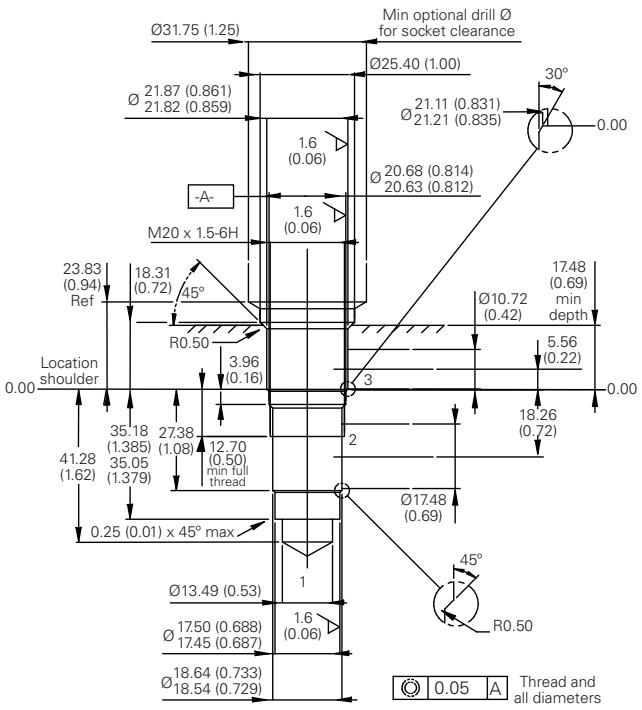

F

Where measurements are critical request certified drawings. We reserve the right to change specifications without notice.

1SEB30 - Overcenter valve

Fully balanced, pilot assisted relief with check
30 L/min (8 USgpm) • 270 bar (4000 psi)

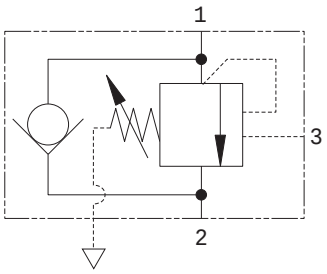

Sectional view

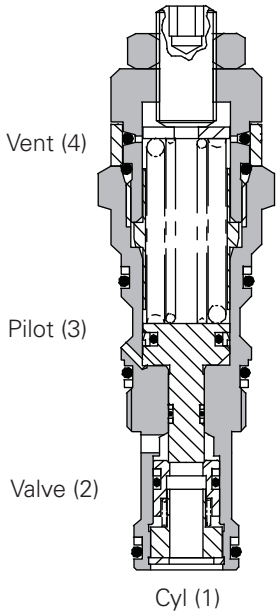

Description

Overcenter valves give static and dynamic control of loads by supplying a counterbalance pressure to the actuator. They prevent runaway in the event of hose burst and hold the load with minimal leakage.

The pressure balanced valve is unaffected by back pressure, allowing service line reliefs to operate and for the valve to be used in regenerative or proportional valve systems.

The overcenter valve should be mounted either into, onto or as close to the actuator as possible to give maximum protection.

Single overcenter valves control unidirectional loads such as in aerial platforms, cranes or winches and dual overcenters are suited to bi-directional motion such as wheel motor applications or cylinders going over center.

Operation

The check section allows free flow into the actuator then holds and locks the load against movement. The pilot assisted relief valve section will give controlled movement when pilot pressure is applied. The relief section is normally set to open at a pressure at least 1.3 times the maximum load induced pressure but the pressure required to open the valve and allow movement depends on the pilot ratio of the valve. For optimization of load control and energy usage, a choice of pilot ratios is available.

The pressure required to open the valve and start actuator movement can be calculated as follows:

$$\text{Pilot Pressure} = \frac{\text{(Relief Setting) - (Load Pressure)}}{\text{Pilot Ratio}}$$

Features

Cartridge is economical and fits simple cavity. Allows quick, easy field service - reduces down time. Interchangeable with pilot check valve of a similar size.

Pilot ratio

5:1

Performance data

Ratings and specifications

Figures based on: Oil Temp = 40°C Viscosity = 32 cSt (150 SUS)	
Rated flow	30 L/min (8 USgpm)
Max relief setting	350 bar (5000 psi)
Max load induced pressure	270 bar (4000 psi)
Cartridge material	Working parts hardened and ground steel. External steel surfaces zinc plated.
Mounting position	Unrestricted
Cavity number	A20090-T11A
Torque cartridge into cavity	45 Nm (33 lbs ft)
Weight	0.14 kg (0.30 lbs)
Seal kit number	SK1079 (Nitrile) SK1079V (Viton®)
Recommended filtration level	BS5540/4 Class 18/13 (25 micron nominal)
Operating temperature	-30° to +90°C (-22° to +194°F)
Leakage	0.3 milliliters/min nominal (5 dpm)
Nominal viscosity range	5 to 500 cSt

Pressure drop

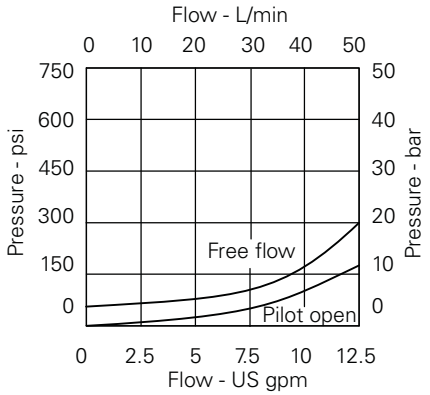

Where measurements are critical request certified drawings. We reserve the right to change specifications without notice.

1SEB30 - Overcenter valve

Fully balanced, pilot assisted relief with check
30 L/min (8 USgpm) • 270 bar (4000 psi)

Model code

1SEB30 – F – 35 S 5

1 2 3 4 5

1 Function

1SEB30

2 Adjustment means

F - Screw Adjustment

N - Fixed - State pressure setting required

For fixed versions add setting in 10 bar increments to end of part number. Subject to a ±10% tolerance.

3 Pressure range @ 4.8 L/min

Note: Code based on pressure in bar.

35 - 75-350 bar
Std setting 210 bar
Std setting made at 4.8 L/min

4 Seals

S - Nitrile
(For use with most industrial hydraulic oils)

SV - Viton (For high temperature and most special fluid applications)

5 Pilot ratio

5 - 5:1

Dimensions

mm (inch)

Cartridge only
Basic Code
1SEB30

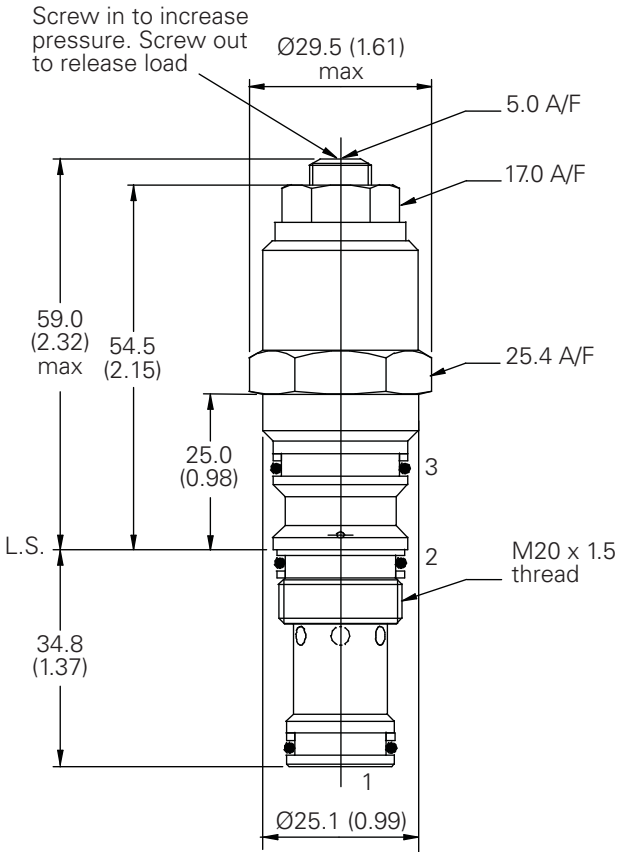

Cavity

Model	A20090-T11A
Form Drill	TD-11A
Form Reamer	TR-11A

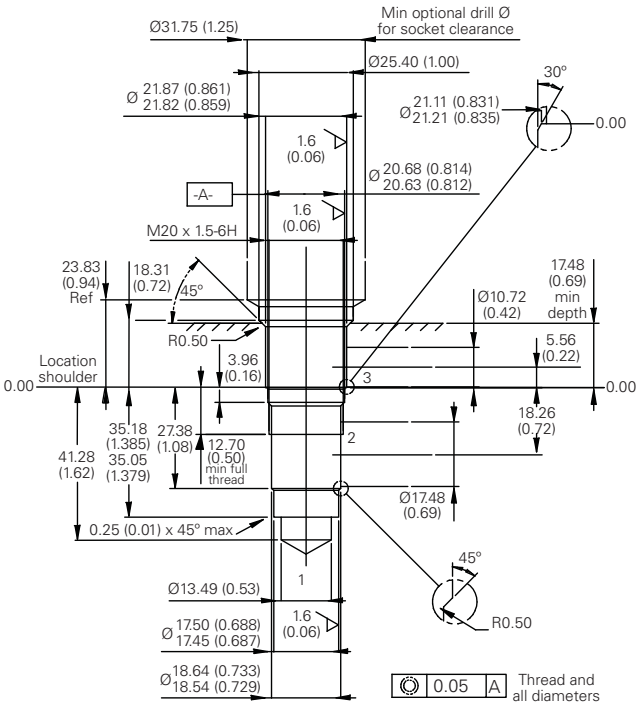

Note: Tightening torque of "F" adjuster locknut - 20 to 25 Nm

Where measurements are critical request certified drawings. We reserve the right to change specifications without notice.

F

1SEL30 - Overcenter valve

Counterbalanced, pilot assisted relief with check
30 L/min (8 USgpm) • 380 bar (5510 psi)

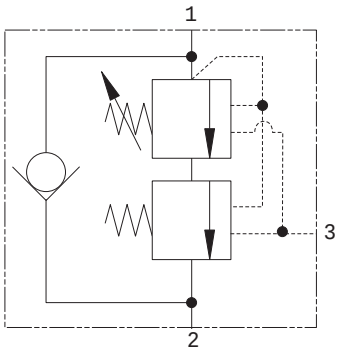

Operation

The check section allows free flow and then locks the load against movement. The pilot assisted relief valve section will give controlled movement when pilot pressure is applied, maintaining a counterbalance pressure to prevent initial pressure loss and therefore instability. The total pressure setting will normally be set at 1.3 times the load induced pressure. The counterbalance pressure reduces as the pilot pressure increases.

Features

Cartridge is economical and fits simple cavity. Allows quick, easy field service - reduces down time. Interchangeable with pilot check valve of a similar size.

Pilot ratio

Primary 4.3:1
Secondary 0.4:1

Sectional view

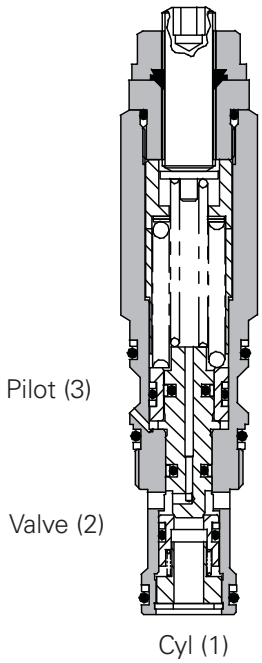

Performance data

Ratings and specifications

Figures based on: Oil Temp = 40°C Viscosity = 32 cSt (150 SUS)	
Rated flow	30 L/min (8 USgpm)
Max setting	380 bar (5510 psi)
Cartridge material	Working parts hardened and ground steel. External steel surfaces zinc plated.
Mounting position	Unrestricted
Cavity number	A20090-T11A
Torque cartridge into cavity	45 Nm (33 lbs ft)
Weight	0.15 kg (0.33 lbs)
Seal kit number	SK1079 (Nitrile) SK1079V (Viton®)
Recommended filtration level	BS5540/4 Class 18/13 (25 micron nominal)
Operating temperature	-30° to +90°C (-22° to +194°F)
Leakage	0.3 milliliters/min nominal (5 dpm)
Nominal viscosity range	5 to 500 cSt

Viton is a registered trademark of E.I. DuPont.

Description

The 1SEL overcenter valve performs all duties of a regular overcenter but maintains a counterbalance pressure to provide dampening of cylinders when there is a rapid loss in stored pressure. This counterbalance pressure reduces as the pilot pressure increases. Typical applications include extension cylinders on telescopic handlers where it is important to have a smooth operation when retracting from full extension.

Pressure drop

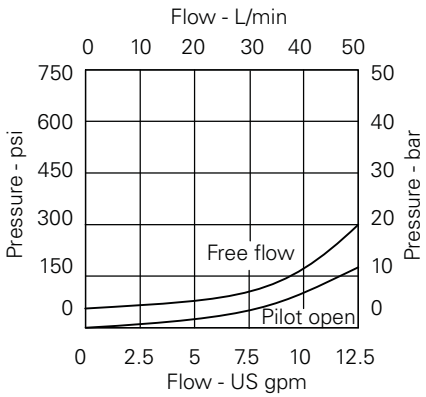

Note: This valve has been designed to eliminate instability from flexible boom applications or where the load induced pressure varies greatly. To get the best results, the settings should be adjusted for each application and then factory set for porduction quantities. Please contact our Technical Department for more information.

Where measurements are critical request certified drawings. We reserve the right to change specifications without notice.

Model code

1SEL30 – F – 30 S 230 / 50

1 2 3 4 5 6

1 Function

1SEL30

2 Adjustment means counterbalance setting

F - Screw Adjustment

N - Fixed - State pressure setting required

For fixed versions add setting in 10 bar increments to end of part number. Subject to a ±10% tolerance.

3 Pressure range @ 4.8 L/min

Note: Code based on pressure in bar.

20 - 170-300 bar Std setting 220 bar (170/50)

30 - 240-370 bar Std setting 280 bar (230/50)

40 - 270-380 bar Std setting 350 bar (300/50)

Std setting at 4.8 L/min

4 Seals

S - Nitrile (For use with most industrial hydraulic oils)

SV - Viton (For high temperature and most special fluid applications)

5 High pressure setting bar

(10 bar increments)

130 to 310 bar (2175 to 5000 psi)

6 Counterbalance setting bar

(10 bar increments)
20 to 120 bar (300 to 1740 psi)

Dimensions

mm (inch)

Cartridge only

Basic Code
1SEL30

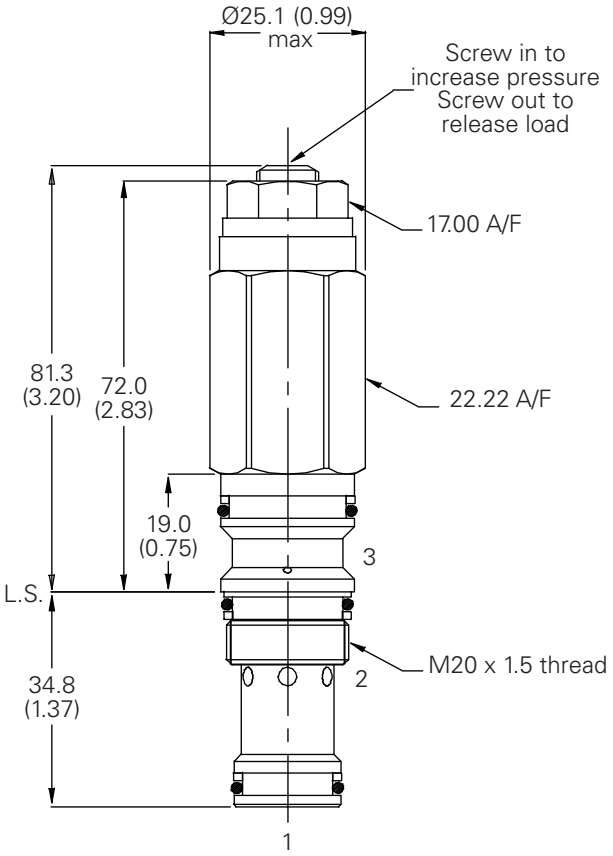

Note: Tightening torque of "F" adjuster locknut - 20 to 25 Nm.

Cavity

Model	A20090-T11A
Form Drill	TD-11A
Form Reamer	TR-11A

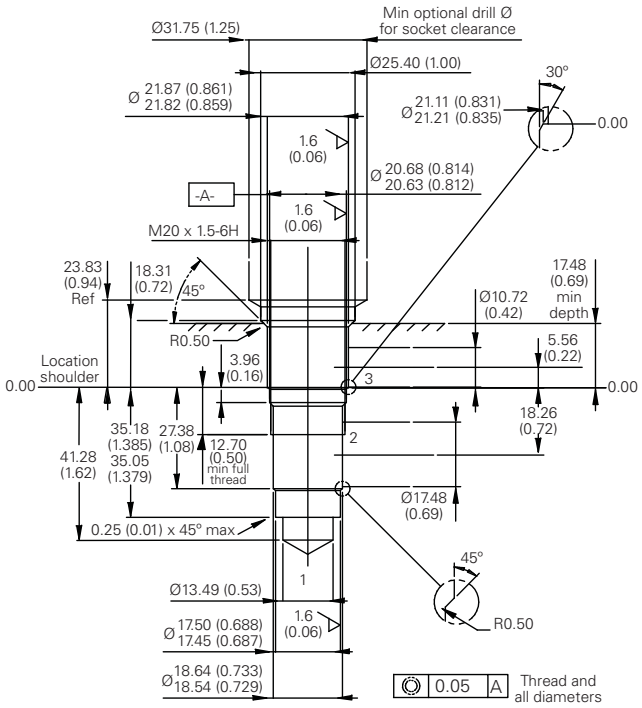

Where measurements are critical request certified drawings. We reserve the right to change specifications without notice.

1SE90 - Overcenter valve

Pilot assisted relief with check
90 L/min (23 USgpm) • 270 bar (4000 psi)

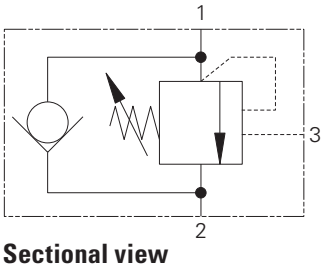

Sectional view

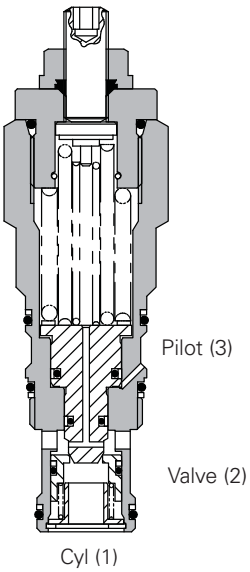

Description

Overcenter valves give static and dynamic control of loads by regulating the flow into and out of hydraulic actuators. When installed close to or within an actuator, the overcenter valve will stop runaway in the event of hose burst and if open center directional control valves are used, will allow thermal expansion relief of the hydraulic fluid.

The overcenter cartridge is ideal for mounting directly into a cavity machined in the body of the cylinder, motor or rotary actuator. The cartridge can also be mounted directly to the ports via a specifically machined body as part of a Hydraulic Integrated Circuit or single unit, or contained within one of our standard line bodies.

Single overcenter valves are normally used when the load is unidirectional, for example an aerial platform or crane and dual overcenter valves are used for controlling loads in both directional for motor applications or for cylinders going over center.

Operation

The check section allows free flow into the actuator then holds and locks the load against movement. The pilot assisted relief valve section will give controlled movement when pilot pressure is applied. The relief section is normally set to open at a pressure at least 1.3 times the maximum load induced pressure but the pressure required to open the valve and allow movement depends on the pilot ratio of the valve. For optimization of load control and energy usage, a choice of pilot ratios is available.

The pressure required to open the valve and start actuator movement can be calculated as follows:

$$\text{Pilot Pressure} = \frac{\text{(Relief Setting) - (Load Pressure)}}{\text{Pilot Ratio}}$$

Features

Cartridge is economical and fits simple cavity. Allows quick, easy field service - reduces down time. Interchangeable with pilot check valve of a similar size.

Pilot ratio

4:1 Best suited for applications where the load remains relatively constant.

Other ratios available on request.

Performance data

Ratings and specifications

Figures based on: Oil Temp = 40°C Viscosity = 32 cSt (150 SUS)	
Rated flow	90 L/min (23 USgpm)
Max relief setting	350 bar (5000 psi)
Max load induced pressure:	270 bar (4000 psi)
Cartridge material	Working parts hardened and ground steel. External steel surfaces zinc plated.
Mounting position	Unrestricted
Cavity number	A20092-T2A
Torque cartridge into cavity	60 Nm (44 lbs ft)
Weight	0.42 kg (0.92 lbs)
Seal kit number	SK1093 (Nitrile) SK1093V (Viton®)
Recommended filtration level	BS5540/4 Class 18/13 (25 micron nominal)
Operating temperature	-30° to +90°C (-22° to +194°F)
Leakage	0.3 milliliters/min nominal (5 dpm)
Nominal viscosity range	5 to 500 cSt

Viton is a registered trademark of E.I. DuPont.

Pressure drop

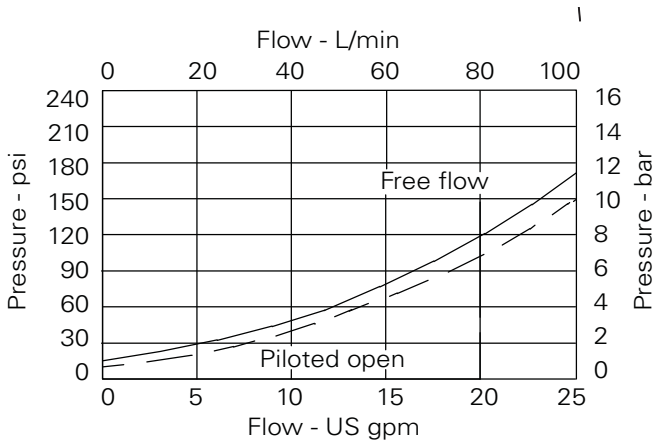

Where measurements are critical request certified drawings. We reserve the right to change specifications without notice.

Model code

1SE90 – F – 35 S 4

1 2 3 4 5

1 Function

1SE90

2 Adjustment means

F - Screw Adjustment

N - Fixed - State pressure setting required

For fixed versions add setting in 10 bar increments to end of part number. Subject to a ±10% tolerance.

3 Pressure range @ 4.8 L/min

Note: Code based on pressure in bar.

20 - 70-225 bar
Std setting 100 bar

35 - 200-350 bar
Std setting 210 bar

Std setting made at 4.8 L/min

4 Seals

S - Nitrile (For use with most industrial hydraulic oils)

SV - Viton (For high temperature and most special fluid applications)

5 Pilot ratio

4 - 4:1

8 - 8:1

Other ratios available upon request

Dimensions

mm (inch)

Cartridge only

Basic code

1SE90

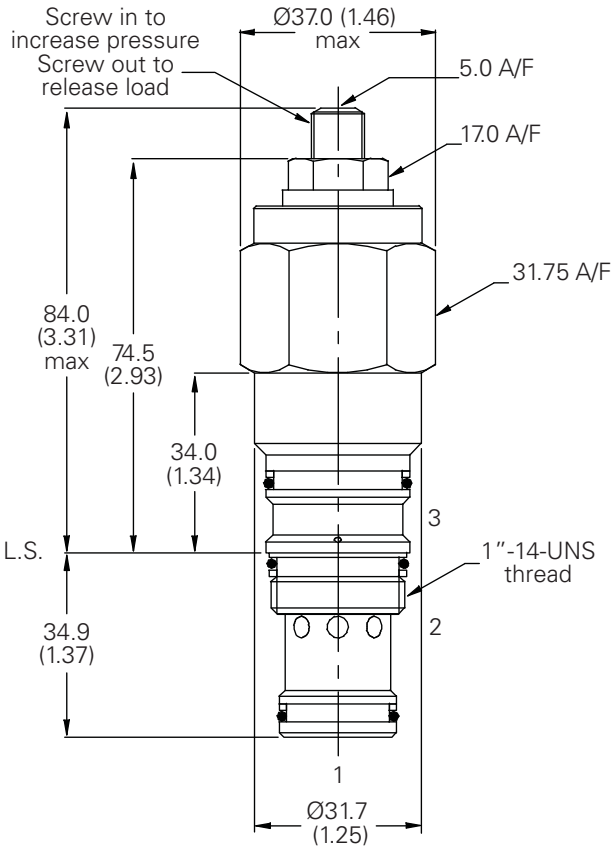

Note: Tightening torque of "F" adjuster locknut - 20 to 25 Nm.

Cavity

Model	A20092-T2A
Form Drill	TD-2A
Form Reamer	TR-2A

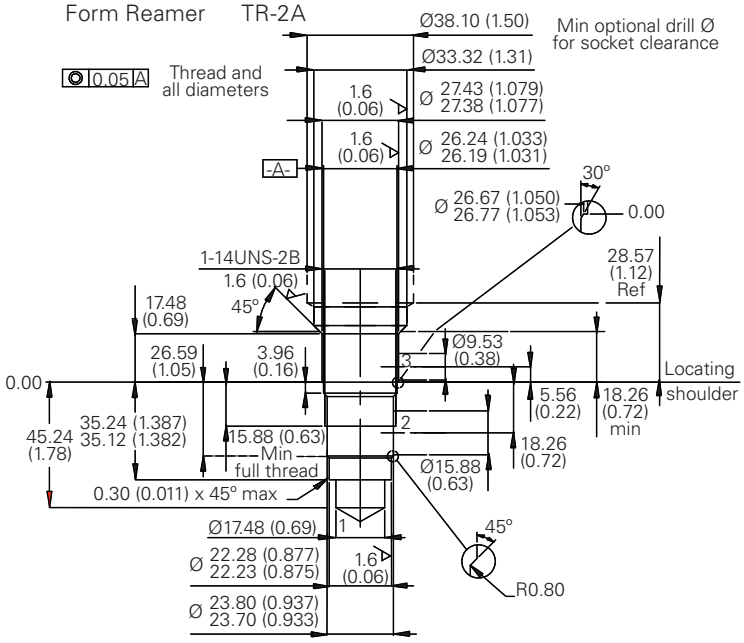

Where measurements are critical request certified drawings. We reserve the right to change specifications without notice.

1SER90 - Overcenter valve

Part balanced, pilot assisted relief with check
90 L/min (23 USgpm) • 270 bar (4000 psi)

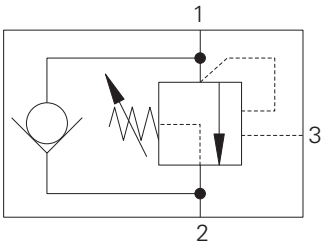

Sectional view

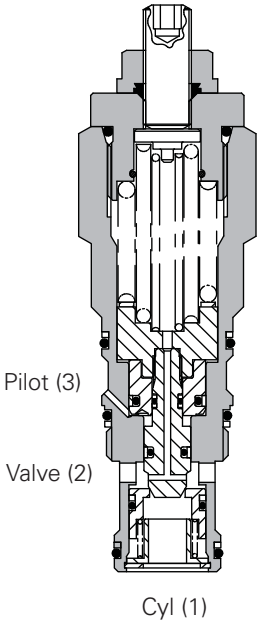

Description

The 1SER series overcenter valve performs all duties of a regular overcenter but is able to relieve and stay open irrespective of downstream pressure. This enables the valve to operate when used with a closed center directional valve which has service line reliefs. The poppet is pressure balanced, preventing relief setting increase due to back pressure.

Operation

The check section allows free flow into the actuator then holds and locks the load against movement. The pilot assisted relief valve section will give controlled movement when pilot pressure is applied. The relief section is normally set to open at a pressure at least 1.3 times the maximum load induced pressure but the pressure required to open the valve and allow movement depends on the pilot ratio of the valve. For optimization of load control and energy usage, a choice of pilot ratios is available.

The pressure required to open the valve and start actuator movement can be calculated as follows:

$$\text{Pilot Pressure} = \frac{\text{(Relief Setting) - (Load Pressure)}}{\text{Pilot Ratio}}$$

Features

Cartridge is economical and fits simple cavity. Allows quick, easy field service - reduces down time. Interchangeable with pilot check valve of a similar size.

Pilot ratio

4:1 Best suited for applications where the load remains relatively constant.

Other ratios available on request.

Performance data

Ratings and specifications

Figures based on: Oil Temp = 40°C Viscosity = 32 cSt (150 SUS)	
Rated flow	90 L/min (23 USgpm)
Max relief setting	350 bar (5000 psi)
Max load induced pressure:	270 bar (4000 psi)
Cartridge material	Working parts hardened and ground steel. External steel surfaces zinc plated.
Mounting position	Unrestricted
Cavity number	A20092-T2A
Torque cartridge into cavity	60 Nm (44 lbs ft)
Weight	0.42 kg (0.92 lbs)
Seal kit number	SK1093 (Nitrile) SK1093V (Viton®)
Recommended filtration level	BS5540/4 Class 18/13 (25 micron nominal)
Operating temperature	-30° to +90°C (-22° to +194°F)
Leakage	0.3 milliliters/min nominal (5 dpm)
Nominal viscosity range	5 to 500 cSt

Viton is a registered trademark of E.I. DuPont.

Pressure drop

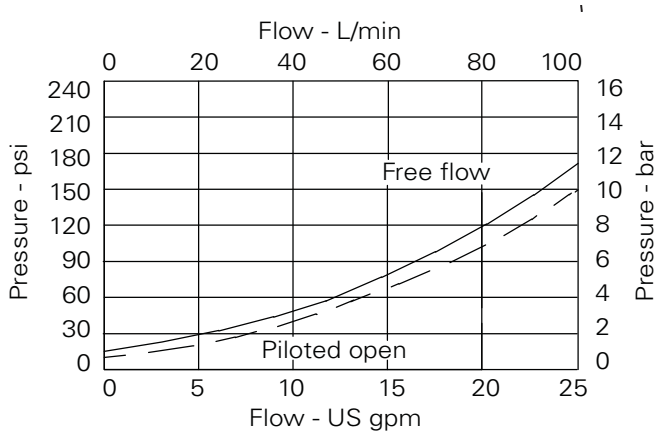

Where measurements are critical request certified drawings. We reserve the right to change specifications without notice.

Model code

1SER90 – F – 35 S 4

1 2 3 4 5

1 Function

1SER30

2 Adjustment means

F - Screw Adjustment

N - Fixed - State pressure setting required

For fixed versions add setting in 10 bar increments to end of part number. Subject to a ±10% tolerance.

3 Pressure range @ 4.8 L/min

Note: Code based on pressure in bar.

20 - 70-225 bar
Std setting 100 bar

35 - 70-350 bar
Std setting 210 bar

Std setting made at 4.8 L/min

4 Seals

S - Nitrile (For use with most industrial hydraulic oils)

SV - Viton (For high temperature and most special fluid applications)

5 Pilot ratio

4 - 4:1

Other ratios available upon request

Dimensions

mm (inch)

Cartridge only
Basic Code

1SER90

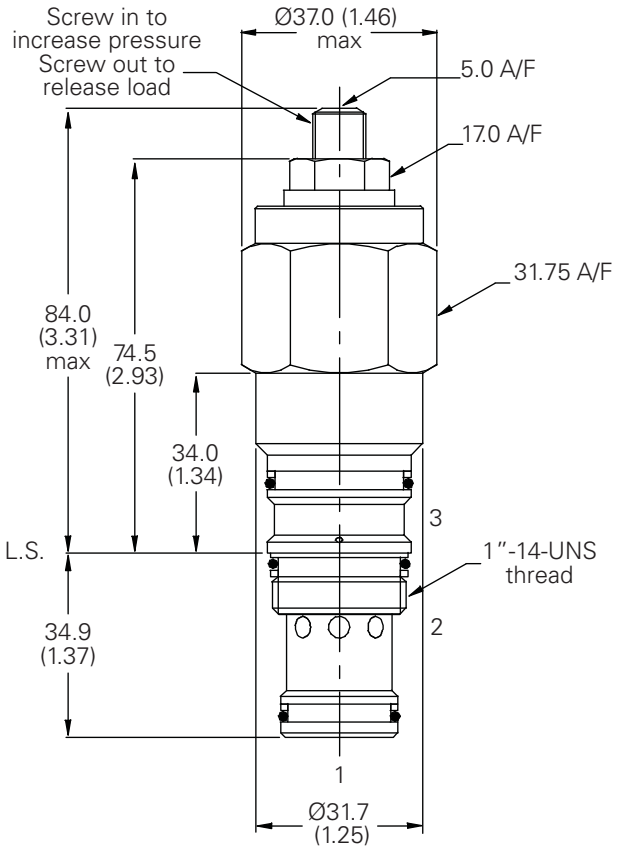

Note: Tightening torque of "F" adjuster locknut - 20 to 25 Nm.

Cavity

Model	A20092-T2A
Form Drill	TD-2A
Form Reamer	TR-2A

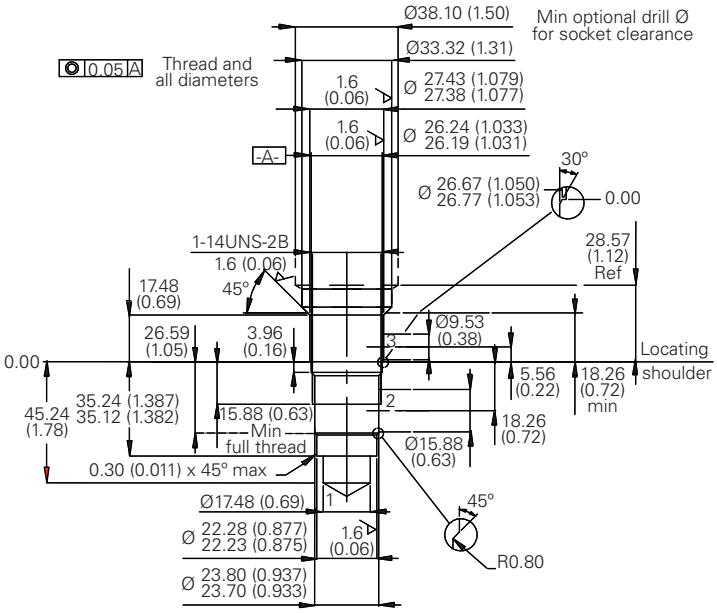

Where measurements are critical request certified drawings. We reserve the right to change specifications without notice.

1SEB90 - Overcenter valve

Fully balanced, pilot assisted relief with check
90 L/min (23 USgpm) • 270 bar (4000 psi)

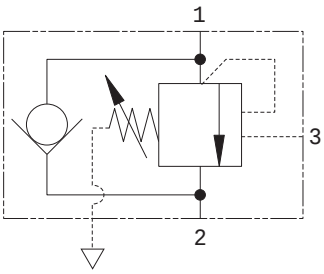

Sectional view

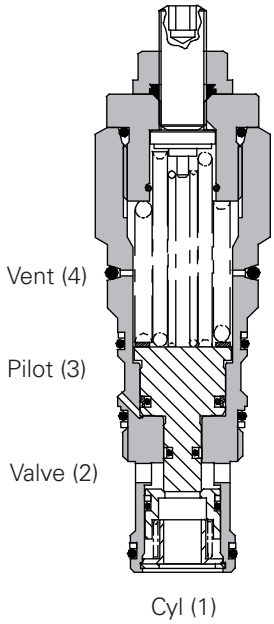

Description

Overcenter valves give static and dynamic control of loads by supplying a counterbalance pressure to the actuator. They prevent runaway in the event of hose burst and hold the load with minimal leakage.

The pressure balanced valve is unaffected by back pressure, allowing service line reliefs to operate and for the valve to be used in regenerative or proportional valve systems.

The overcenter valve should be mounted either into, onto or as close to the actuator as possible to give maximum protection.

Single overcenter valves control unidirectional loads such as in aerial platforms, cranes or winches and dual overcenters are suited to bi-directional motion such as wheel motor applications or cylinders going over center.

Operation

The check section allows free flow into the actuator then holds and locks the load against movement. The pilot assisted relief valve section will give controlled movement when pilot pressure is applied. The relief section is normally set to open at a pressure at least 1.3 times the maximum load induced pressure but the pressure required to open the valve and allow movement depends on the pilot ratio of the valve. For optimization of load control and energy usage, a choice of pilot ratios is available.

The pressure required to open the valve and start actuator movement can be calculated as follows

$$\text{Pilot Pressure} = \frac{\text{(Relief Setting) - (Load Pressure)}}{\text{Pilot Ratio}}$$

Feature

Cartridge is economical and fits simple cavity. Allows quick, easy field service - reduces down time. Interchangeable with pilot check valve of a similar size.

Pilot ratio

4:1 Best suited for applications where the load remains relatively constant.

Other ratios available on request.

Performance data

Ratings and specifications

Figures based on: Oil Temp = 40°C Viscosity = 32 cSt (150 SUS)	
Rated flow	90 L/min (23 USgpm)
Max relief setting	350 bar (5000 psi)
Max load induced pressure	270 bar (4000 psi
Cartridge material	Working parts hardened and ground steel. External steel surfaces zinc plated.
Mounting position	Unrestricted
Cavity number	A20092-T2A
Torque cartridge into cavity	60 Nm (44 lbs ft)
Weight	0.42 kg (0.92 lbs)
Seal kit number	SK1096 (Nitrile) SK1096V (Viton)
Recommended filtration level	BS5540/4 Class 18/13 (25 micron nominal)
Operating temperature	-30°C to +90°C (-22° to +194°F)
Leakage	0.3 milliliters/min nominal (5 dpm)
Nominal viscosity range	5 to 500 cSt

Viton is a registered trademark of E.I. DuPont.

Pressure drop

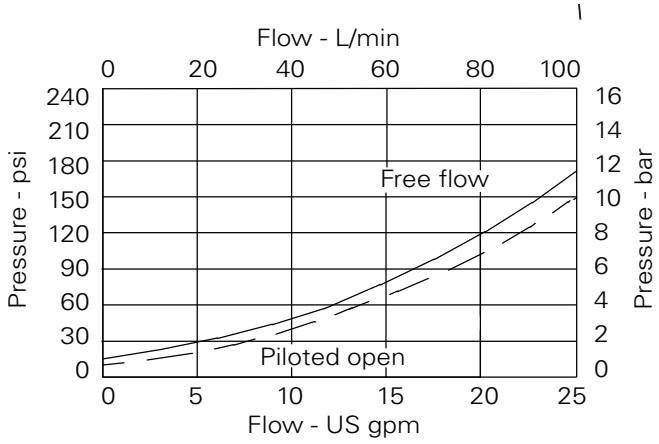

Where measurements are critical request certified drawings. We reserve the right to change specifications without notice.

Fully balanced, pilot assisted relief with check
90 L/min (23 USgpm) • 270 bar (4000 psi)

Model code

1SEB90 – F – 35 S 4

1 2 3 4 5

1 Basic code
1SEB90

2 Adjustment means
F - Screw Adjustment

N -Fixed - State pressure setting required

For fixed versions add setting in 10 bar increments to end of part number. Subject to a ±10% tolerance.

3 Pressure range
Note: Code based on pressure in bar.

20 - 70-225 bar.
Std setting 100 bar

35 - 75-350 bar.
Std setting 210 bar
Std setting made at 4.8 L/min

4 Seals
S - Nitrile (For use with most industrial hydraulic oils)

SV - Viton (For high temperature and most special fluid applications)

5 Pilot ratio
4 - 4:1

Other ratios available upon request

Dimensions
mm (inch)

Cartridge only
Basic Code
1SEB90

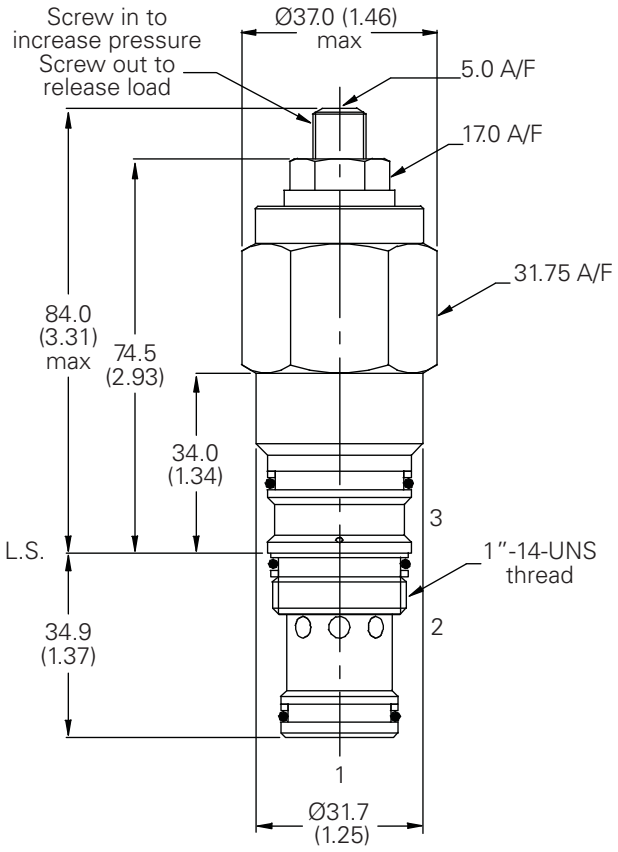

Cavity

Model	A20092-T2A
Form Drill	TD-2A
Form Reamer	TR-2A

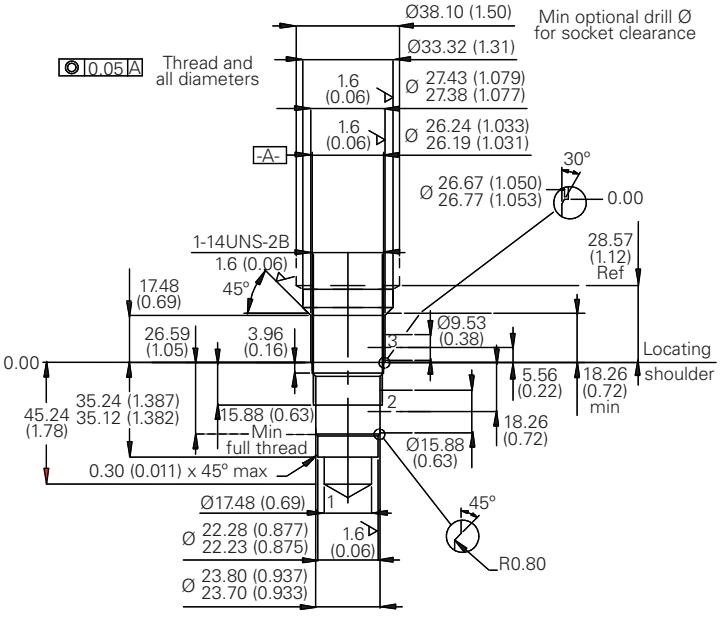

Note: Tightening torque of "F" adjuster locknut - 20 to 25 Nm.

Where measurements are critical request certified drawings. We reserve the right to change specifications without notice.

F

1SEL90 - Overcenter valve

Counterbalance, pilot assisted relief with check
90 L/min (23 USgpm) • 380 bar (5510 psi)

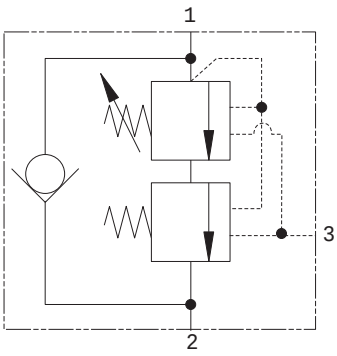

Operation

The check section allows free flow and then locks the load against movement. The pilot assisted relief valve section will give controlled movement when pilot pressure is applied, maintaining a counterbalance pressure to prevent initial pressure loss and therefore instability. The total pressure setting will normally be set at 1.3 times the load induced pressure. The counterbalance pressure reduces as the pilot pressure increases.

Features

Cartridge is economical and fits simple cavity. Allows quick, easy field service - reduces down time. Interchangeable with pilot check valve of a similar size.

Pilot ratio

Primary 5.6:1

Secondary 0.7:1

Sectional view

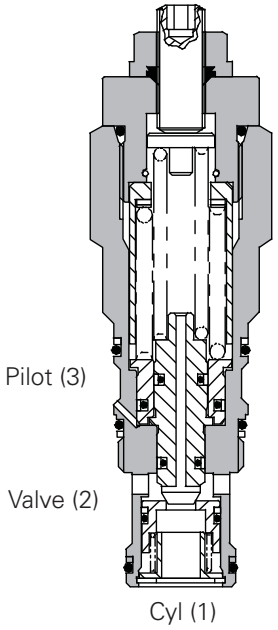

Performance data

Ratings and specifications

Figures based on: Oil Temp = 40°C Viscosity = 32 cSt (150 SUS)	
Rated flow	90 L/min (23 USgpm)
Max setting	380 bar (5510 psi)
Cartridge material	Working parts hardened and ground steel. External steel surfaces zinc plated.
Mounting position	Unrestricted
Cavity number	A20092-T2A
Torque cartridge into cavity	60 Nm (44 lbs ft)
Weight	0.42 kg (0.92 lbs)
Seal kit number	SK1093 (Nitrile) SK1093V (Viton®)
Recommended filtration level	BS5540/4 Class 18/13 (25 micron nominal)
Operation temperature	-30° to +90°C (-22° to +194°F)
Leakage	0.3 milliliters/min nominal (5 dpm)
Nominal viscosity range	5 to 500 cSt

Viton is a registered trademark of E.I. DuPont.

Description

The 1SEL overcenter valve performs all duties of a regular overcenter but maintains a counterbalance pressure to provide dampening of cylinders when there is a rapid loss in stored pressure. This counterbalance pressure reduces as the pilot pressure increases. Typical applications include extension cylinders on telescopic handlers where it is important to have a smooth operation when retracting from full extension.

Pressure drop

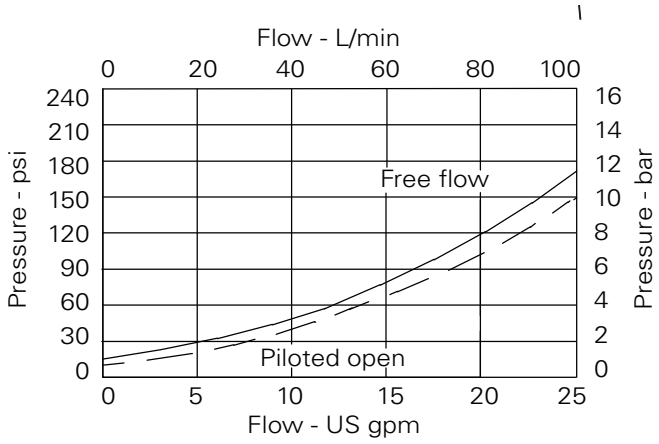

Note: This valve has been designed to eliminate instability from flexible boom applications or where the load induced pressure varies greatly. To get the best results, the settings should be adjusted for each application and then factory set for porduction quantities. Please contact Technical Department for more information.

Where measurements are critical request certified drawings. We reserve the right to change specifications without notice.

Model code

1SEL90	–	F	–	30	S	220	60
1		2		3	4	5	6

1 Function

1SEL90 -

2 Adjustment means counterbalance setting

F - Screw Adjustment

N - Fixed - State pressure setting required

For fixed versions add setting in 10 bar increments to end of part number. Subject to a ±10% tolerance.

3 Pressure range @ 4.8 L/min

Note: Code based on pressure in bar.

20 - 170-350 bar
Std setting 220 bar (160/60)

35 - 210-380 bar
Std setting 250 bar (220/60)

Std setting made at 4.8 L/min

4 Seals

S - Nitrile (For use with most industrial hydraulic oils)

SV - Viton (For high temperature and most special fluid applications)

5 High pressure setting bar

(10 bar increments).
150 to 650 bar (2175 to 3335 psi)

6 Counterbalance setting bar

(10 bar increments).
20 to 170 bar (100 to 250 psi)

Dimensions

mm (inch)

Cartridge only
Basic Code
1SEL90

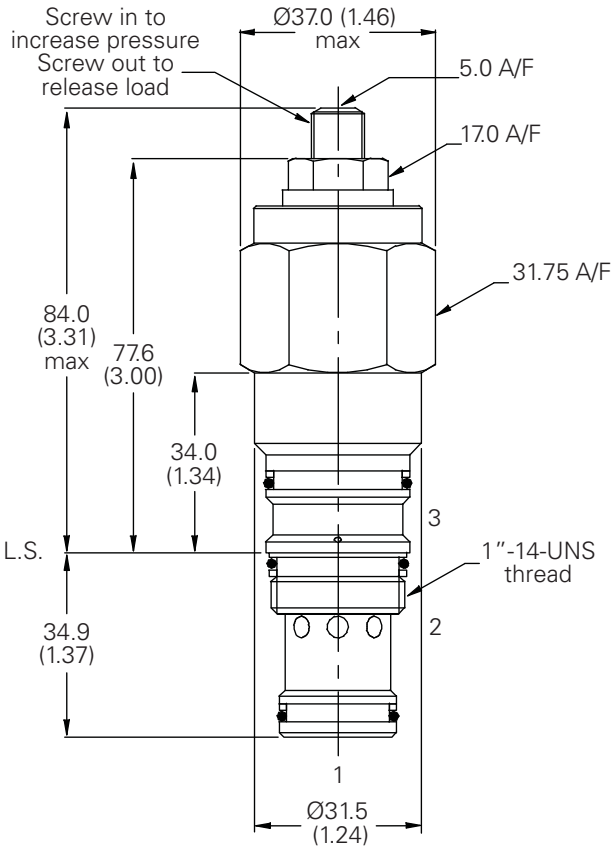

Note: Tightening torque of "F" adjuster locknut - 20 to 25 Nm

Cavity

Model	A20092-T2A
Form Drill	TD-2A
Form Reamer	TR-2A

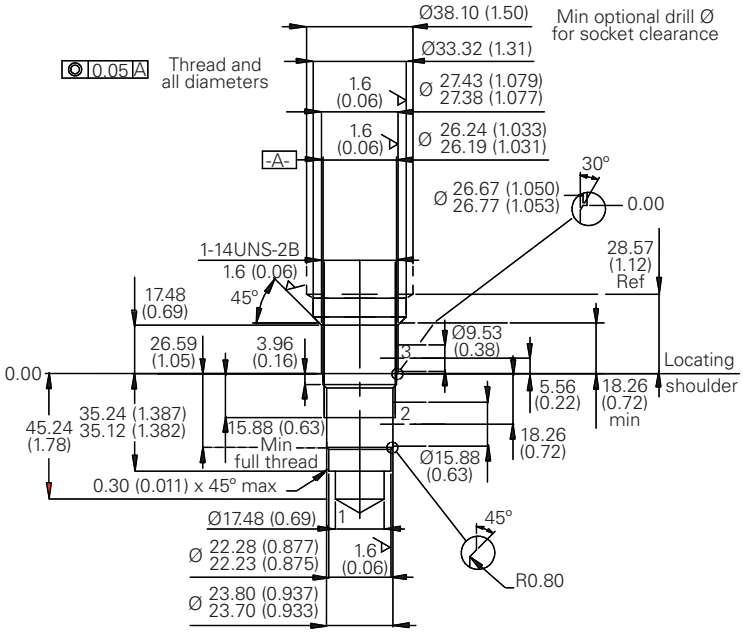

Where measurements are critical request certified drawings. We reserve the right to change specifications without notice.

1SE140 - Overcenter valve

Pilot assisted relief with check
140 L/min (37 USgpm) • 340 bar (4930 psi)

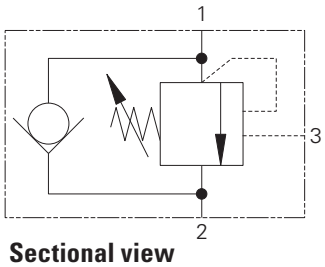

Sectional view

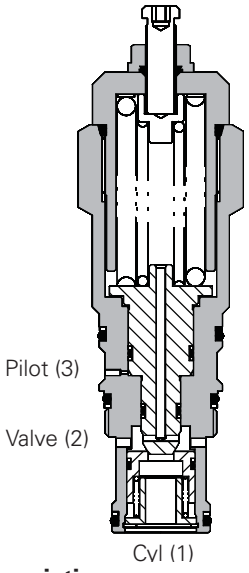

Description

Overcenter valves give static and dynamic control of loads by regulating the flow into and out of hydraulic actuators. When installed close to or within an actuator, the overcenter valve will stop runaway in the event of hose burst and if open center directional control valves are used, will allow thermal expansion relief of the hydraulic fluid.

The overcenter cartridge is ideal for mounting directly into a cavity machined in the body of the cylinder, motor or rotary actuator. The cartridge can also be mounted directly to the ports via a specifically machined body as part of a Hydraulic Integrated Circuit or single unit, or contained within one of our standard line bodies.

Single overcenter valves are normally used when the load is unidirectional, for example an aerial platform or crane and dual overcenter valves are used for controlling loads in both directional for motor applications or for cylinders going over center.

Operation

The check section allows free flow into the actuator then holds and locks the load against movement. The pilot assisted relief valve section will give controlled movement when pilot pressure is applied. The relief section is normally set to open at a pressure at least 1.3 times the maximum load induced pressure but the pressure required to open the valve and allow movement depends on the pilot ratio of the valve. For optimization of load control and energy usage, a choice of pilot ratios is available.

The pressure required to open the valve and start actuator movement can be calculated as follows:

$$\text{Pilot Pressure} = \frac{\text{(Relief Setting) - (Load Pressure)}}{\text{Pilot Ratio}}$$

Features

Cartridge is economical and fits simple cavity. Allows quick, easy field service - reduces down time. Interchangeable with pilot check valve of a similar size.

Pilot ratio

4:1 Best suited for applications where load varies and machine structure can induce instability.

6:1 Best suited for applications where the load remains relatively constant.

Other options available upon request.

Performance data

Ratings and specifications

Figures based on: Oil Temp = 40°C Viscosity = 32 cSt (150 SUS)	
Rated flow	140 L/min (37 USgpm)
Max relief setting	420 bar (6090 psi)
Max load induced pressure	340 bar (4930 psi)
Cartridge material	Working parts hardened and ground steel. External steel surfaces zinc plated.
Mounting position	Unrestricted
Cavity number	A20094-T17A
Torque cartridge into cavity	150 Nm (110 lbs ft)
Weight	1.2 kg (2.5 lbs)
Seal kit number	SK1116 (Nitrile) SK1116V (Viton®)
Recommended filtration level	BS5540/4 Class 18/13 (25 micron nominal)
Operation temperature	-30° to +90°C (-22° to +194°F)
Leakage	0.3 milliliters/min nominal (5 dpm)
Nominal viscosity range	5 to 500 cSt

Viton is a registered trademark of E.I. DuPont.

Pressure drop

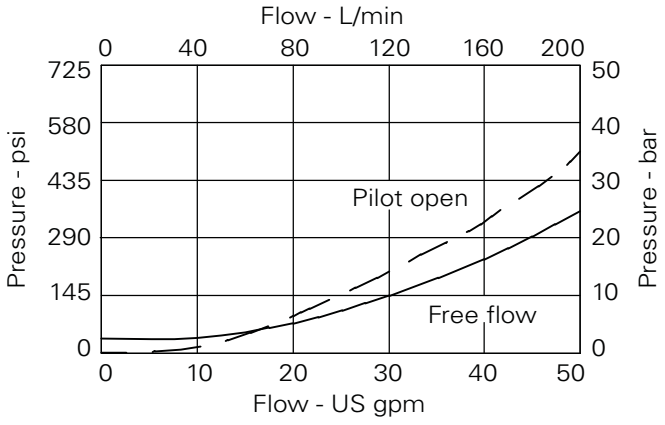

Where measurements are critical request certified drawings. We reserve the right to change specifications without notice.

Model code

1SE** – F – 40 S 4**

1 2 3 4 5

1 Basic code

1SE140

2 Adjustment means

F - Screw Adjustment

N - Fixed - State pressure setting required

For fixed versions add setting in 10 bar increments to end of part number. Subject to a ±10% tolerance.

3 Pressure range @ 4.8 L/min

Note: Code based on pressure in bar.

20 - 140-250 bar.
Std setting 190 bar

30 - 220-330 bar.
Std setting 270 bar

40 - 310-420 bar.
Std setting 370 bar

Std setting made at 4.8 L/min

4 Seals

S - Nitrile (For use with most industrial hydraulic oils)

SV - Viton (For high temperature and most special fluid applications)

5 Pilot ratio

4 - 4:1

6 - 6:1

Other ratios available upon request

Dimensions

mm (inch)

Cartridge only
Basic Code
1SE140

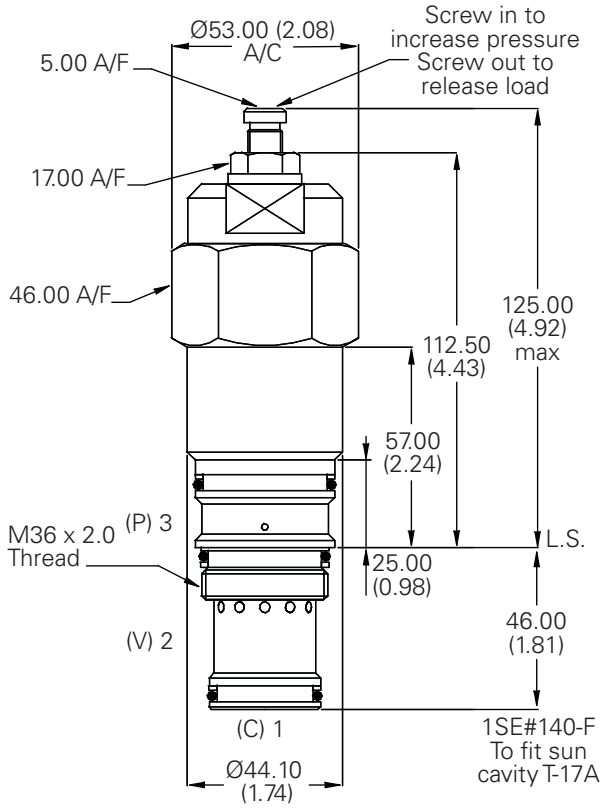

Note: Tightening torque of "F" adjuster locknut - 20 to 25 Nm.

Cavity

Model	A20094-T17A
Form Drill	TD-17A
Form Reamer	TR17A

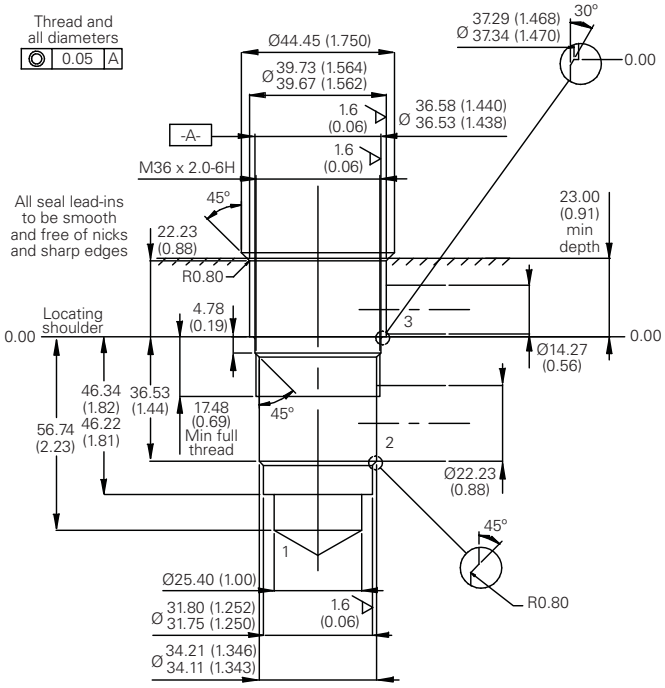

Where measurements are critical request certified drawings. We reserve the right to change specifications without notice.

1SER140 - Overcenter valve

Part balanced pilot assisted relief with check
140 L/min (37 USgpm) • 340 bar (4930 psi)

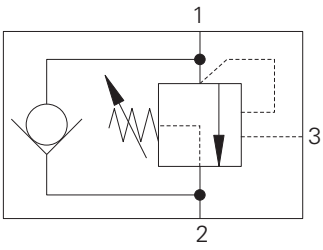

Sectional view

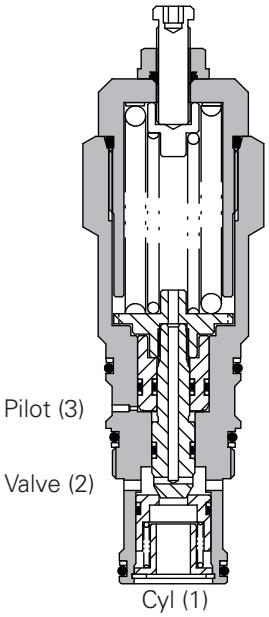

Description

The 1SER series overcenter valve performs all duties of a regular overcenter but is able to relieve and stay open irrespective of downstream pressure. This enables the valve to operate when used with a closed center directional valve which has service line reliefs. The poppet is pressure balanced, preventing relief setting increase due to back pressure.

Operation

The check section allows free flow into the actuator then holds and locks the load against movement. The pilot assisted relief valve section will give controlled movement when pilot pressure is applied. The relief section is normally set to open at a pressure at least 1.3 times the maximum load induced pressure but the pressure required to open the valve and allow movement depends on the pilot ratio of the valve. For optimization of load control and energy usage, a choice of pilot ratios is available.

The pressure required to open the valve and start actuator movement can be calculated as follows:

$$\text{Pilot Pressure} = \frac{\text{(Relief Setting) - (Load Pressure)}}{\text{Pilot Ratio}}$$

Features

Cartridge is economical and fits simple cavity. Allows quick, easy field service - reduces down time. Interchangeable with pilot check valve of a similar size.

Pilot ratio

4:1 Best suited for applications where load varies and machine structure can induce instability.

6:1 Best suited for applications where the load remains relatively constant.

Other options available upon request.

Performance data

Ratings and specifications

Figures based on: Oil Temp = 40°C Viscosity = 32 cSt (150 SUS)	
Rated flow	140 L/min (37 USgpm)
Max relief setting	420 bar (6090 psi)
Max Load Induced pressure:	340 bar (4930 psi
Cartridge material	Working parts hardened and ground steel. External steel surfaces zinc plated.
Mounting position	Unrestricted
Cavity number	A20094-T17A
Torque cartridge into cavity	150 Nm (110 lbs ft)
Weight	1.2 kg (2.5 lbs)
Seal kit number	SK1116 (Nitrile) SK1116V (Viton®)
Recommended filtration level	BS5540/4 Class 18/13 (25 micron nominal)
Operation temperature	-30°C to +90°C (-22° to +194°F)
Leakage	0.3 milliliters/min nominal (5 dpm)
Nominal viscosity range	5 to 500 cSt

Viton is a registered trademark of E.I. DuPont.

Pressure drop

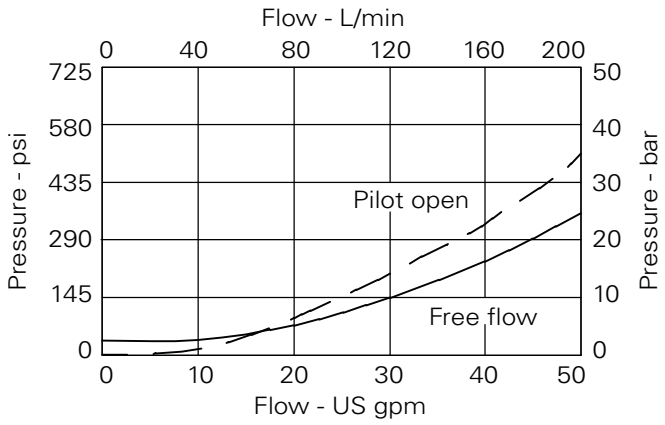

Where measurements are critical request certified drawings. We reserve the right to change specifications without notice.

Model code

1SER* – F – 40 S 4**

1 2 3 4 5

1 Function

1SER140

2 Adjustment means

F - Screw Adjustment

N - Fixed - State pressure setting required

For fixed versions add setting in 10 bar increments to end of part number. Subject to a ±10% tolerance.

3 Pressure range @ 4.8 L/min

Note: Code based on pressure in bar.

20 - 140-250 bar.
Std setting 190 bar

30 - 220-330 bar.
Std setting 270 bar

40 - 310-420 bar.
Std setting 370 bar

Std setting made at 4.8 L/min

4 Seals

S - Nitrile (For use with most industrial hydraulic oils)

SV - Viton (For high temperature and most special fluid applications)

5 Pilot ratio

4 - 4:1

6 - 6:1

Other ratios available upon request

Dimensions

mm (inch)

Cartridge only
Basic Code
1SER140

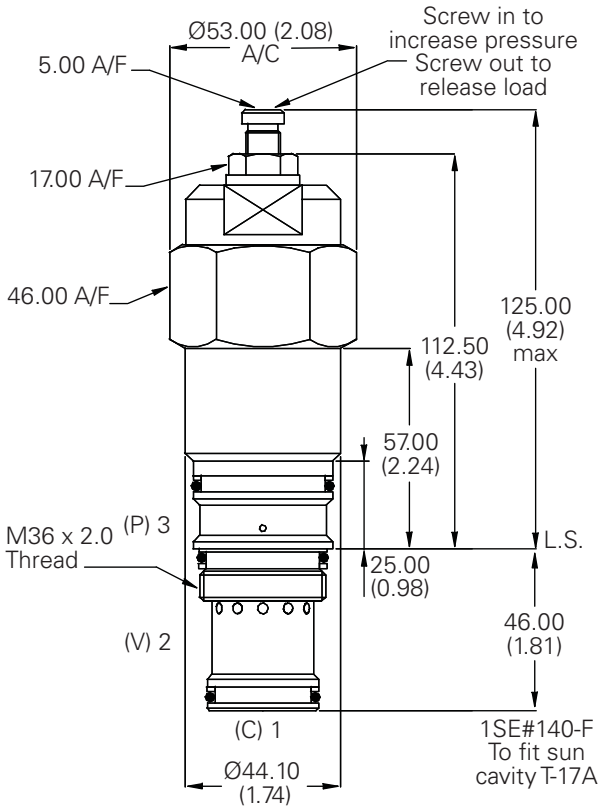

Note: Tightening torque of "F" adjuster locknut - 20 to 25 Nm.

Cavity

Model	A20094-T17A
Form Drill	TD-17A
Form Reamer	TR17A

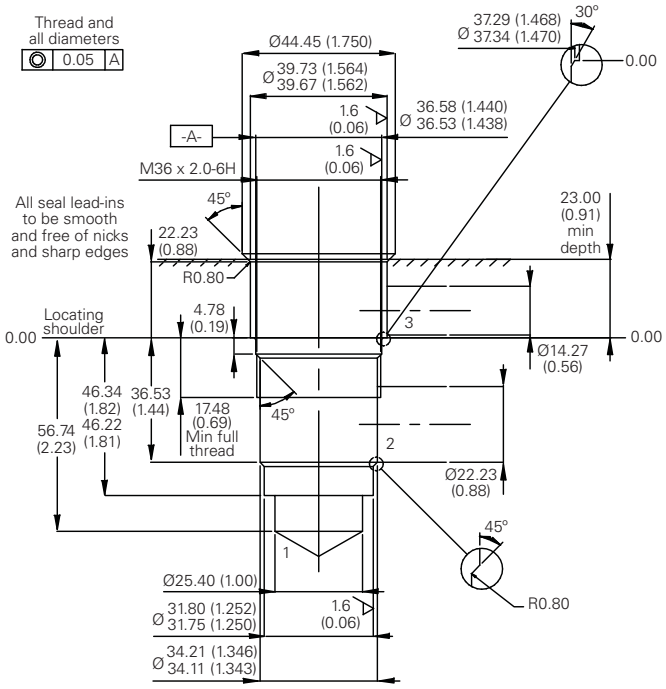

Where measurements are critical request certified drawings. We reserve the right to change specifications without notice.

1SEL140 - Overcenter valve

Counterbalanced pilot assisted relief with check
140 L/min (37 USgpm) • 380 bar (5310 psi)

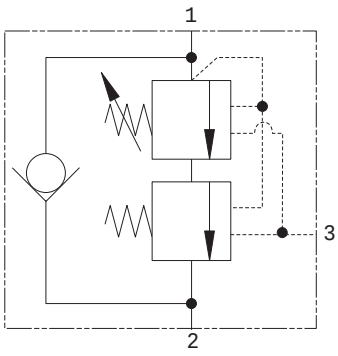

Operation

The check section allows free flow and then locks the load against movement. The pilot assisted relief valve section will give controlled movement when pilot pressure is applied, maintaining a counterbalance pressure to prevent initial pressure loss and therefore instability. The total pressure setting will normally be set at 1.3 times the load induced pressure. The counterbalance pressure reduces as the pilot pressure increases.

Features

Cartridge is economical and fits simple cavity. Allows quick, easy field service - reduces down time. Interchangeable with pilot check valve of a similar size.

Pilot ratio

Primary 6.1:1

Secondary 0.5:1

Sectional view

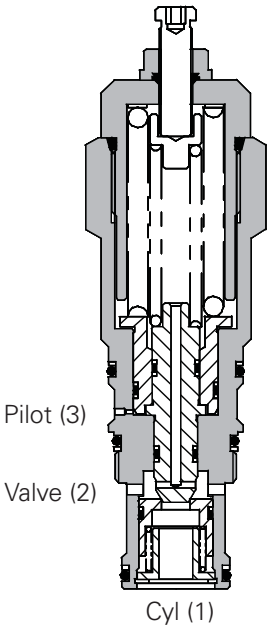

Performance data

Ratings and specifications

Figures based on: Oil Temp = 40°C Viscosity = 32 cSt (150 SUS)	
Rated flow	140 L/min (37 USgpm)
Max setting	380 bar (5310 psi)
Cartridge material	Working parts hardened and ground steel. External steel surfaces zinc plated.
Mounting position	Unrestricted
Cavity number	A20094-T17A
Torque cartridge into cavity	150 Nm (110 lbs ft)
Weight	1.2 kg (2.5 lbs)
Seal kit number	SK1116 (Nitrile) SK1116V (Viton®)
Recommended filtration level	BS5540/4 Class 18/13 (25 micron nominal)
Operation temperature	-30° to +90°C (-22° to +194°F)
Leakage	0.3 milliliters/min nominal (5 dpm)
Nominal viscosity range	5 to 500 cSt

Description

The 1SEL overcenter valve performs all duties of a regular overcenter but maintains a counterbalance pressure to provide dampening of cylinders when there is a rapid loss in stored pressure. This counterbalance pressure reduces as the pilot pressure increases. Typical applications include extension cylinders on telescopic handlers where it is important to have a smooth operation when retracting from full extension.

Pressure drop

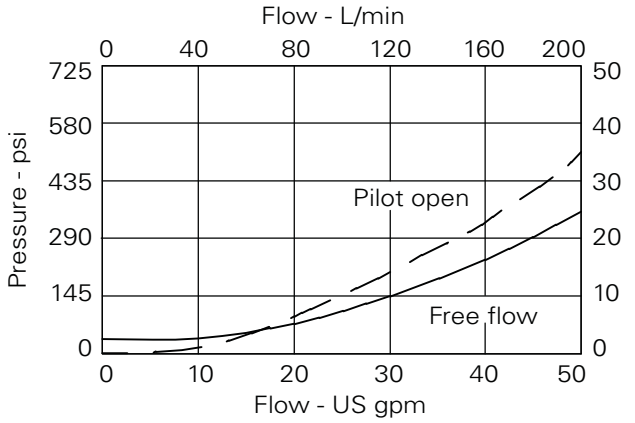

Note: This valve has been designed to eliminate instability from flexible boom applications or where the load induced pressure varies greatly. To get the best results, the settings should be adjusted for each application and then factory set for porduction quantities. Please contact our Technical Department for more information.

Where measurements are critical request certified drawings. We reserve the right to change specifications without notice.

Model code

1SEL140 – F – 30 S 220 / 60

1 2 3 4 5 6

1 Basic code

1SEL140 - Cartridge and body

2 Adjustment means counterbalance setting

F - Screw Adjustment

N - Fixed - State pressure setting required

For fixed versions add setting in 10 bar increments to end of part number. Subject to a ±10% tolerance.

3 Pressure range 4.8 L/min

Note: Code based on pressure in bar.

20 - 170-320 bar. Std setting 220 bar (160/60)

30 - 230-380 bar. Std setting 280 bar (220/60)

40 - 310-380 bar. Std setting 350 bar (290/60)

4 Seals

S - Nitrile (For use with most industrial hydraulic oils)

SV - Viton (For high temperature and most special fluid applications)

5 High pressure setting bar

(10 bar increments).
150 to 350 bar (2175 to 5000 psi)

6 Counter balance setting bar

(10 bar increments).
20 to 100 bar (300 to 1500 psi)

Dimensions

mm (inch)

Cartridge only
Basic Code
1SEL140

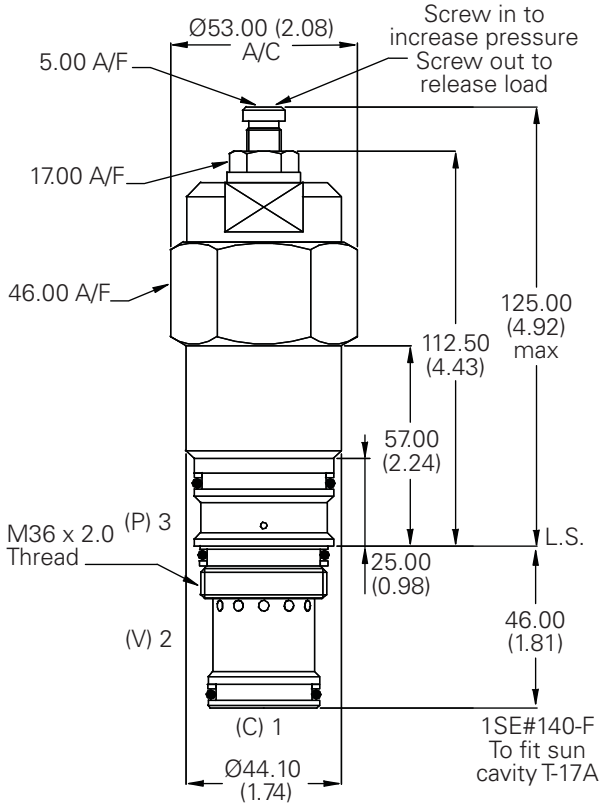

Cavity

Model	A20094-T17A
Form Drill	TD-17A
Form Reamer	TR17A

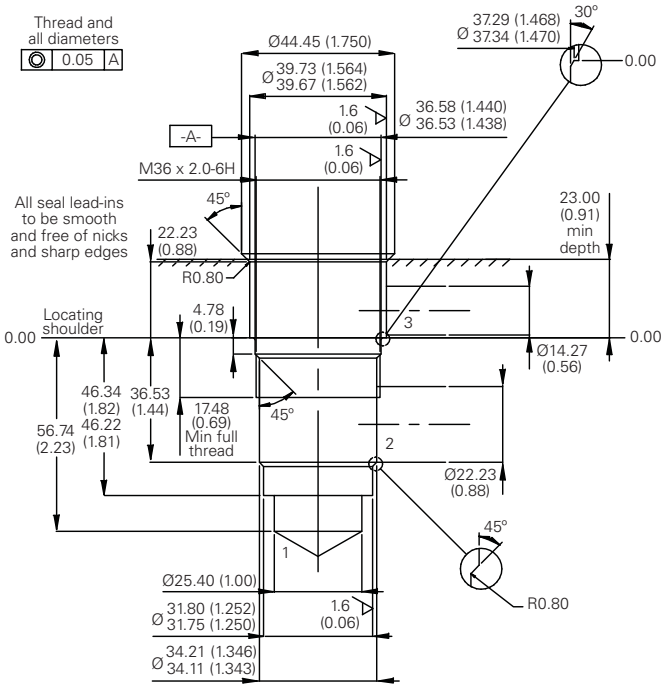

Note: Tightening torque of "F" adjuster locknut - 20 to 25 Nm.

Where measurements are critical request certified drawings. We reserve the right to change specifications without notice.

1CEESH35 - Dual overcenter valve

Pilot assisted relief with brake shuffle
30 L/min (8 USgpm) • 270 bar (4000 psi)

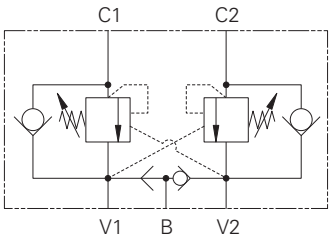

Operation

The check section allows free flow into the actuator then holds and locks the load against movement. The pilot assisted relief valve section will give controlled movement when pilot pressure is applied. The relief section is normally set to open at a pressure at least 1.3 times the maximum load induced pressure but the pressure required to open the valve and allow movement depends on the pilot ratio of the valve. For optimization of load control and energy usage, a choice of pilot ratios is available.

The pressure required to open the valve and start actuator movement can be calculated as follows:

$$\text{Pilot Pressure} = \frac{\text{(Relief Setting) - (Load Pressure)}}{\text{Pilot Ratio}}$$

Features

These valves have the excellent load control and safety features of the dual overcenter valve with the addition of a port for a brake release line. Smooth, safe performance.

Pilot ratio

2.5:1 Best suited for extremely unstable applications such as long booms or flexible frameworks.

5.1 (standard) Best suited for applications where load varies and machine structure can induce instability.

10:1 Best suited for applications where the load remains relatively constant.

Description

Overcenter Valves give static and dynamic control of loads by regulating the flow into and out of hydraulic actuators. When installed close to or within an actuator, the overcenter valve will stop runaway in the event of hose burst and if open centre directional control valves are used, will allow thermal expansion relief of the hydraulic fluid.

These dual overcenter valves also contain a brake release shuttle valve which ensures that pressure is applied to a brake release circuit regardless of whether pressure is applied to ports V1 or V2. These multifunction valves are normally used for the static and dynamic control of systems using motors or semi-rotary actuators.

Performance data

Ratings and specifications

Figures based on: Oil Temp = 40°C Viscosity = 32 cSt (150 SUS)	
Rated flow	30 L/min (8 USgpm)
Max relief pressure	350 bar (5000 psi)
Max load induced pressure	270 bar (4000 psi)
Cartridge material	Working parts hardened and ground steel. External surfaces electroless nickel plated.
Standard housing material	Steel
Mounting position	Line Mounted
Weight	2.20 kg (4.84 lbs)
Seal kit	SK816 (Nitrile) SK816V (Viton®)
Filtration	BS5540/4 Class 18/13 (25 micron nominal)
Temperature range	-30° to +90°C (-22° to +194°F)
Internal leakage	0.3 milliliters/min nominal (5 dpm)
Nominal viscosity range	5 to 500 cSt

Viton is a registered trademark of E.I. DuPont.

Pressure drop

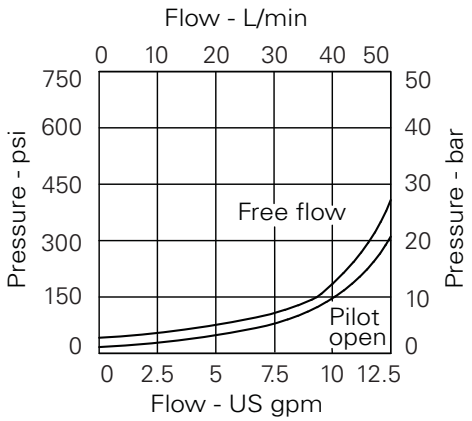

2:5:1 and 5:1 version

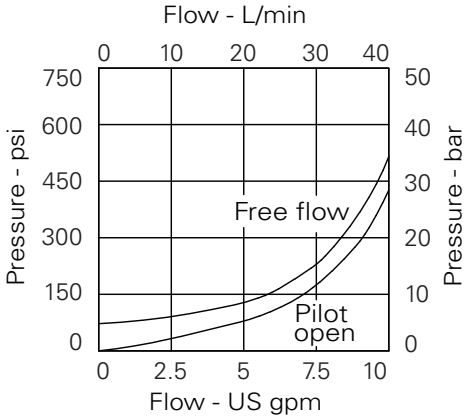

10:1 version

Where measurements are critical request certified drawings. We reserve the right to change specifications without notice.

1CEESH35 - Dual overcenter valve

Pilot assisted relief with brake shuffle
30 L/min (8 USgpm) • 270 bar (4000 psi)

Model code

1CEESH35 – F 3W – 35 S 3 – 377

1 2 3 4 5 6 7

1 Basic code

1CEESH35 - Cartridge and Body

2 Adjustment

F - Screw adjustment

N - Fixed - State pressure setting required

For fixed versions add setting in 10 bar increments to end of part number. Subject to a ±10% tolerance.

3 Port size

Code	Port size	Housing number - sub assembly
		Steel single
3W	3/4" BSP Valve & Cyl Port 1/4" BSP Brake Port	BXP15939-3W-S-377

4 Pressure range @ 4.8 L/min

Note: Code based on pressure in bar.

35 - (2.5:1 and 5:1) 100-350 bar. Std setting 210 bar (10:1) 120-350 bar.

Std setting made at 4.8 L/min

5 Seal material

S - Nitrile (For use with most industrial hydraulic oils)

SV - Viton (For high temperature and most special fluid applications)

6 Pilot ratio

2 - 2.5:1

5 - 5:1 (Standard)

10 - 10:1

7 Body material

377 - Steel

Dimensions

mm (inch)

Complete valve
3/8" Ports
Basic Code
1CEECSH35
Internally Cross Piloted

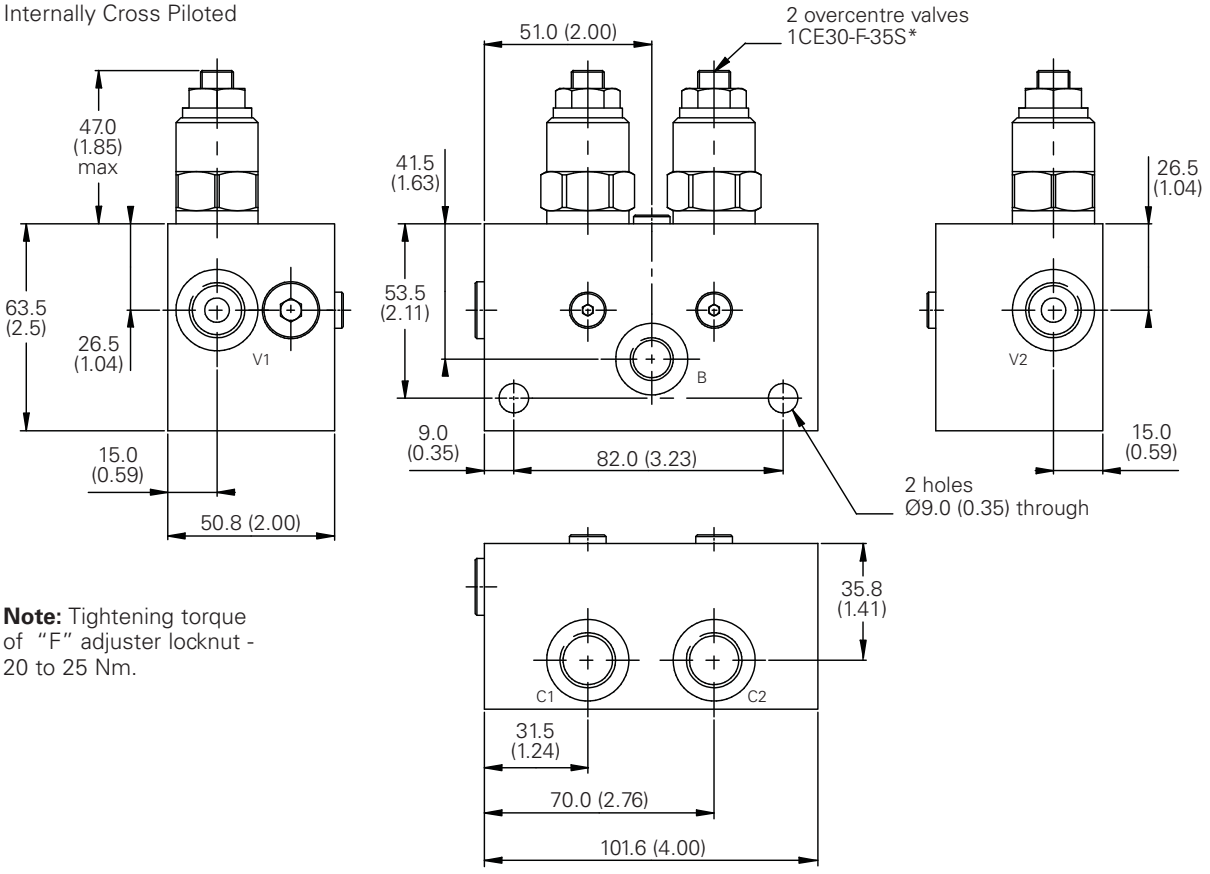

Note: Tightening torque of "F" adjuster locknut - 20 to 25 Nm.

Where measurements are critical request certified drawings. We reserve the right to change specifications without notice.

F

1CEESH95 - Dual overcenter valve

Pilot assisted relief with brake shuffle
90 L/min (23 USgpm) • 270 bar (4000 psi)

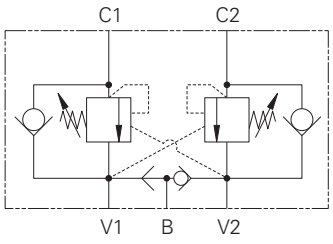

Operation

The check section allows free flow into the actuator then holds and locks the load against movement. The pilot assisted relief valve section will give controlled movement when pilot pressure is applied. The relief section is normally set to open at a pressure at least 1.3 times the maximum load induced pressure but the pressure required to open the valve and allow movement depends on the pilot ratio of the valve. For optimization of load control and energy usage, a choice of pilot ratios is available.

The pressure required to open the valve and start actuator movement can be calculated as follows:

$$\text{Pilot Pressure} = \frac{\text{(Relief Setting) - (Load Pressure)}}{\text{Pilot Ratio}}$$

Features

These valves have the excellent load control and safety features of the dual overcenter valve with the addition of a port for a brake release line. Smooth, safe performance.

Pilot ratio

4:1 Best suited for applications where load varies and machine structure can induce instability.

8.1 Best suited for applications where the load remains relatively constant.

Other ratios are available upon request.

Description

Overcenter Valves give static and dynamic control of loads by regulating the flow into and out of hydraulic actuators. When installed close to or within an actuator, the overcenter valve will stop runaway in the event of hose burst and if open center directional control valves are used, will allow thermal expansion relief of the hydraulic fluid.

These dual overcenter valves also contain a brake release shuttle valve which ensures that pressure is applied to a brake release circuit regardless of whether pressure is applied to ports V1 or V2. These multifunction valves are normally used for the static and dynamic control of systems using motors or semi-rotary actuators.

Performance data

Ratings and specifications

Figures based on: Oil Temp = 40°C Viscosity = 32 cSt (150 SUS)	
Rated flow	30 L/min (8 USgpm)
Max relief pressure	350 bar (5000 psi) **(35)**, 225 bar (3260 psi) **(20)**
Max load induced pressure	270 bar (4000 psi), 160 bar (2300 psi)
Cartridge material	Working parts hardened and ground steel. External surfaces electroless nickel plated.
Standard housing material	Steel
Mounting position	Line Mounted
Weight	2.20 kg (4.84 lbs)
Seal kit	SK817 (Nitrile) SK817V (Viton®)
Filtration	BS5540/4 Class 18/13 (25 micron nominal)
Temperature range	-30°C to +90°C (-22° to +194°F)
Internal leakage	0.3 milliliters/min nominal (5 dpm)
Nominal viscosity range	5 to 500 cSt

Viton is a registered trademark of E.I. DuPont.

Pressure drop

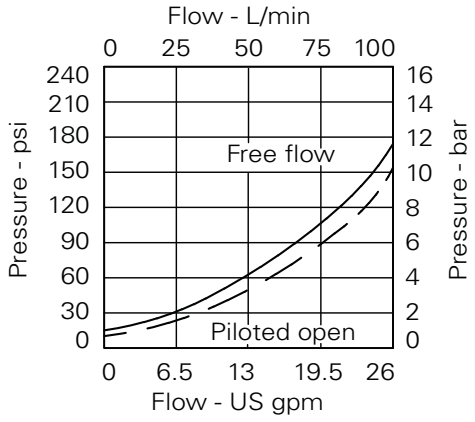

4:1 version

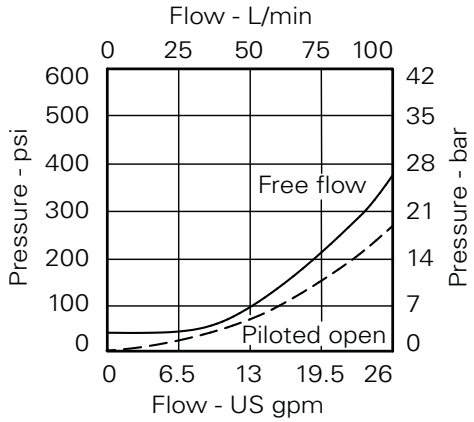

8:1 version

Where measurements are critical request certified drawings. We reserve the right to change specifications without notice.

1CEESH95 - Dual overcenter valve

Pilot assisted relief with brake shuffle
90 L/min (23 USgpm) • 270 bar (4000 psi)

Model code

1CEESH95	–	F	6W	–	35	S	4	377
1		2	3		4	5	6	7

1 Function

1CEESH95 - Cartridge and Body

2 Adjustment means

F - Screw adjustment

N - State pressure setting required

For fixed versions add setting in 10 bar increments to end of part number. Subject to a ±10% tolerance.

3 Port size

Code	Port size	Housing number - body only
		Steel
6W	3/4" BSP Valve & Cyl Port 1/4" BSP Brake Port	BXP17429-6W-S-377

4 Pressure range 4.8 L/min

Note: Code based on pressure in bar.

20 - 70-225 bar. Std setting 100 bar

35 - 200-350 bar. Std setting 210 bar

Std setting made at 4.8 L/min

5 Seals

S - Nitrile (For use with most industrial hydraulic oils.

SV - Viton (For high temperature and most special fluid applications

6 Pilot ratio

4 - 4:1

8 - 8:1

7 Body material

377 - Steel

Dimensions

mm (inch)

Complete valve
3/4" Ports
basic code
1CEESH95

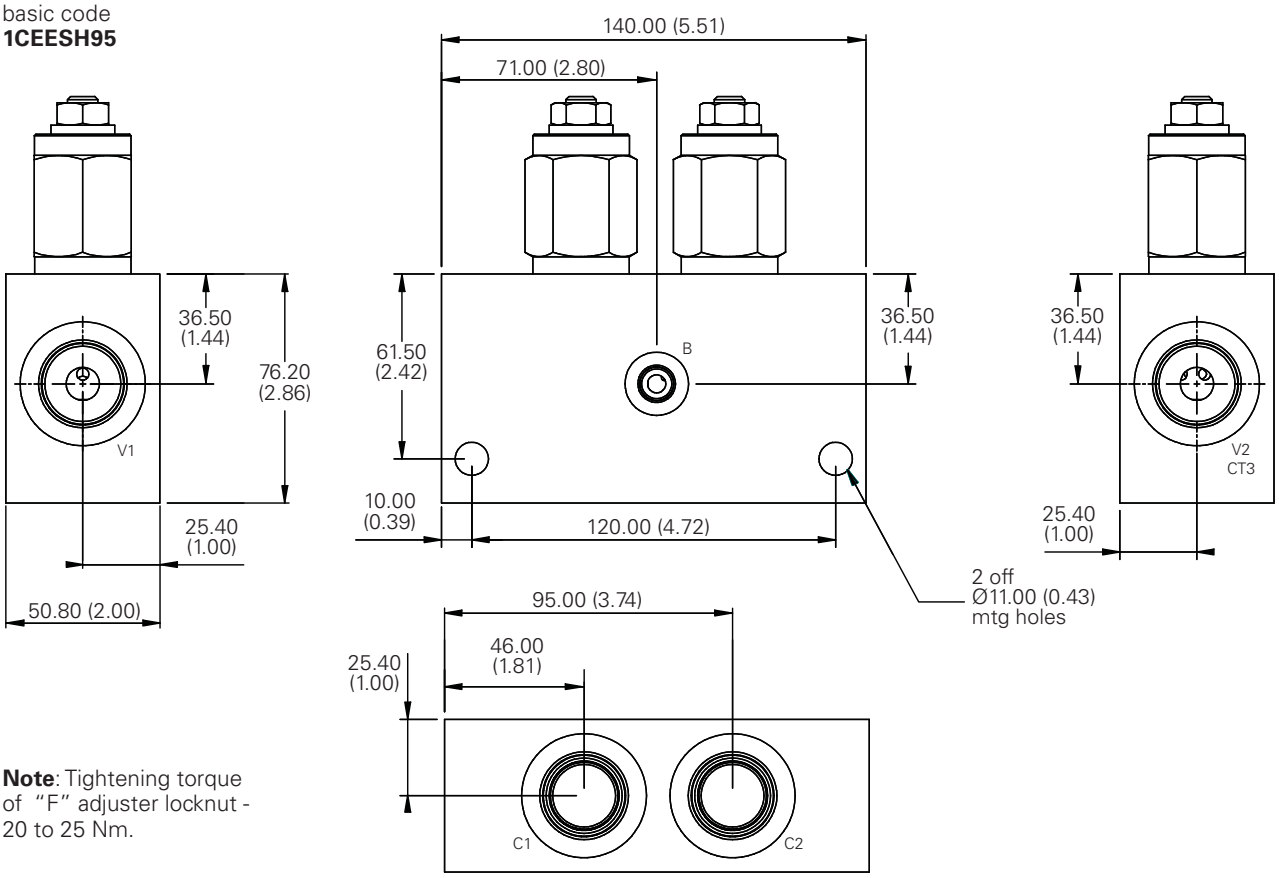

Note: Tightening torque of "F" adjuster locknut - 20 to 25 Nm.

Where measurements are critical request certified drawings. We reserve the right to change specifications without notice.

1CEESH150 - Dual overcenter valve

Pilot assisted relief with brake shuttle
150 L/min (40 USgpm) • 270 bar (4000 psi)

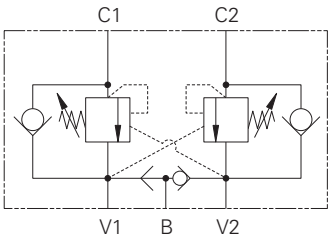

Operation

The check section allows free flow into the actuator then holds and locks the load against movement. The pilot assisted relief valve section will give controlled movement when pilot pressure is applied. The relief section is normally set to open at a pressure at least 1.3 times the maximum load induced pressure but the pressure required to open the valve and allow movement depends on the pilot ratio of the valve. For optimization of load control and energy usage, a choice of pilot ratios is available.

The pressure required to open the valve and start actuator movement can be calculated as follows:

$$\text{Pilot Pressure} = \frac{\text{(Relief Setting) - (Load Pressure)}}{\text{Pilot Ratio}}$$

Features

These valves have the excellent load control and safety features of the dual overcenter valve with the addition of a port for a brake release line. Smooth, safe performance.

Pilot ratio

3.5:1 Best suited for applications where load varies and machine structure can induce instability.

Description

Overcenter Valves give static and dynamic control of loads by regulating the flow into and out of hydraulic actuators. When installed close to or within an actuator, the overcenter valve will stop runaway in the event of hose burst and if open center directional control valves are used, will allow thermal expansion relief of the hydraulic fluid.

These dual overcenter valves also contain a brake release shuttle valve which ensures that pressure is applied to a brake release circuit regardless of whether pressure is applied to ports V1 or V2. These multifunction valves are normally used for the static and dynamic control of systems using motors or semi-rotary actuators.

Performance data

Ratings and specifications

Figures based on: Oil Temp = 40°C Viscosity = 32 cSt (150 SUS)	
Rated flow	150 L/min (40 USgpm)
Max relief pressure	350 bar (5000 psi)
Max load induced pressure	270 bar (4000 psi)
Cartridge material	Working parts hardened and ground steel. External surfaces electroless nickel plated.
Standard housing material	Steel
Mounting position	Line Mounted
Weight	3.50 kg (7.70 lbs)
Seal kit	SK818 (Nitrile) SK818V (Viton®)
Filtration	BS5540/4 Class 18/13 (25 micron nominal)
Temperature range	-30° to +90°C (-22° to +194°F)
Internal leakage	0.3 milliliters/min nominal (5 dpm)
Nominal viscosity range	5 to 500 cSt

Viton is a registered trademark of E.I. DuPont.

Pressure drop

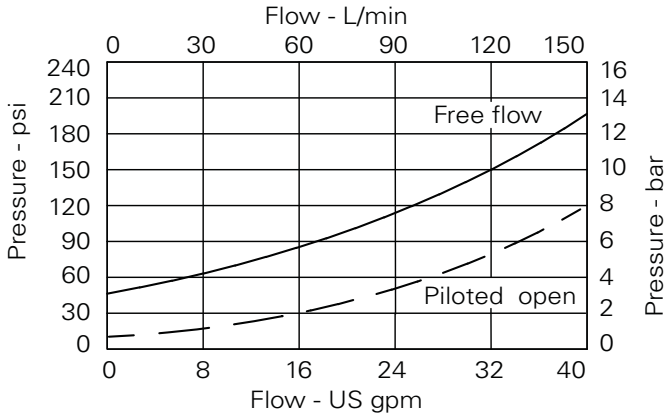

Where measurements are critical request certified drawings. We reserve the right to change specifications without notice.

Model code

1CEESH150 – F 8W – 35 S 3 377

1 2 3 4 5 6 7

1 Function

1CEESH150 - Cartridges and Body

2 Adjustment means

F - Screw adjustment

3 Port size

Code	Port size	Housing number - body only
		Steel
8W	1" BSP Valve & Cyl Port 1/4" BSP Pilot Port	CXP15933-8W-377

4 Pressure range @ 4.8 L/min

Note: Code based on pressure in bar.

35 - 70-350 bar. Std setting 210 bar

Std setting made at 4.8 L/min

5 Seal material

S - Nitrile (For use with most industrial hydraulic oils.

SV - Viton (For high temperature and most special fluid applications

6 Pilot ratio

3 - 3.5:1

7 Body material

377 - Steel

Dimensions

mm (inch)

Complete valve
1" Ports
Basic Code
1CEESH150
Internally Cross Piloted

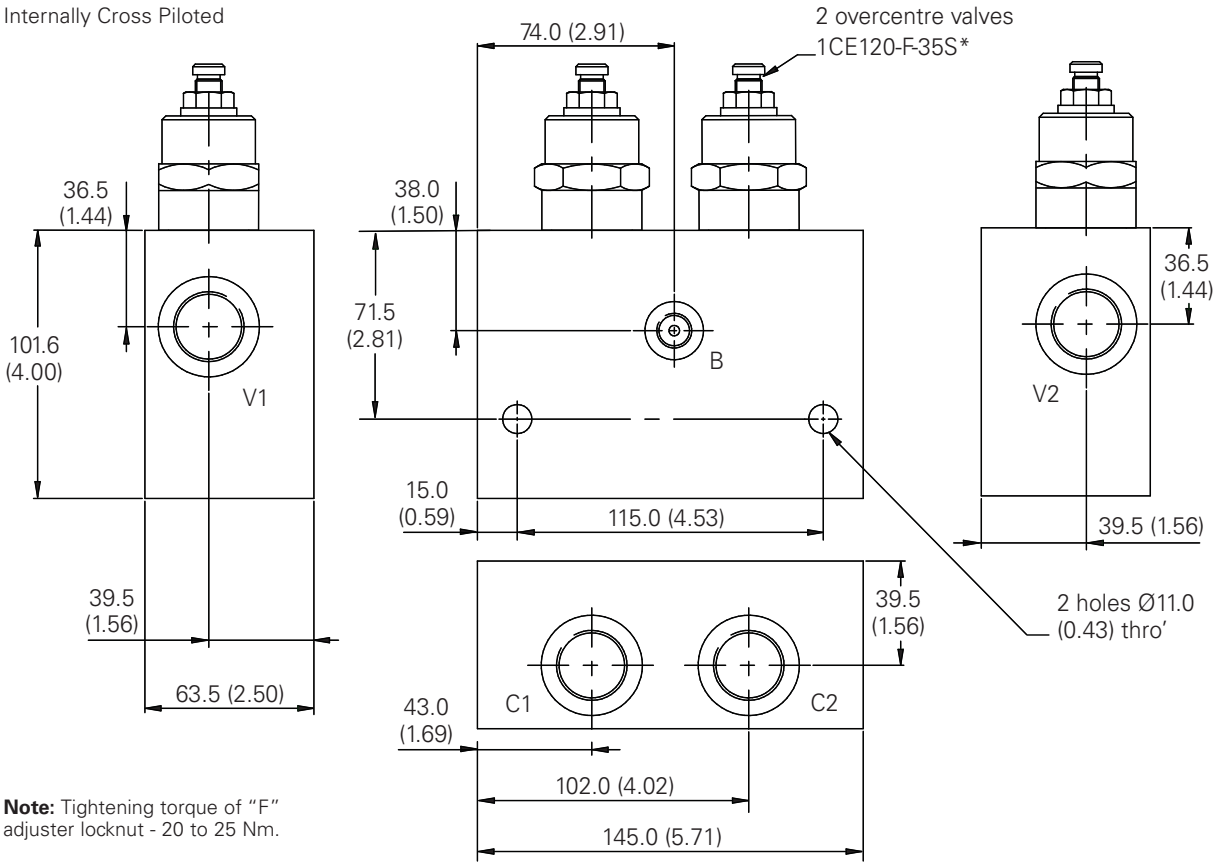

Note: Tightening torque of "F" adjuster locknut - 20 to 25 Nm.

F

1CEESH350 - Dual overcenter valve

Pilot assisted relief with brake shuttle
300 L/min (80 USgpm) • 270 bar (4000 psi)

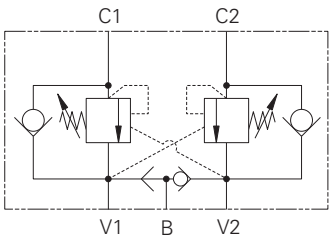

Operation

The check section allows free flow into the actuator then holds and locks the load against movement. The pilot assisted relief valve section will give controlled movement when pilot pressure is applied. The relief section is normally set to open at a pressure at least 1.3 times the maximum load induced pressure but the pressure required to open the valve and allow movement depends on the pilot ratio of the valve. For optimization of load control and energy usage, a choice of pilot ratios is available.

The pressure required to open the valve and start actuator movement can be calculated as follows:

$$\text{Pilot Pressure} = \frac{\text{(Relief Setting) - (Load Pressure)}}{\text{Pilot Ratio}}$$

Features

These valves have the excellent load control and safety features of the dual overcenter valve with the addition of a port for a brake release line. Smooth, safe performance.

Pilot ratio

3:1 Best suited for applications where load varies and machine structure can induce instability.

8:1 Best suited for applications where the load remains relatively constant.

Description

Overcenter Valves give static and dynamic control of loads by regulating the flow into and out of hydraulic actuators. When installed close to or within an actuator, the overcenter valve will stop runaway in the event of hose burst and if open center directional control valves are used, will allow thermal expansion relief of the hydraulic fluid.

These dual overcenter valves also contain a brake release shuttle valve which ensures that pressure is applied to a brake release circuit regardless of whether pressure is applied to ports V1 or V2. These multifunction valves are normally used for the static and dynamic control of systems using motors or semi-rotary actuators.

Performance data

Ratings and specifications

Figures based on: Oil Temp = 40°C Viscosity = 32 cSt (150 SUS)	
Rated flow	300 L/min (80 USgpm)
Max relief pressure	350 bar (5000 psi)
Max load induced pressure	270 bar (4000 psi)
Cartridge material	Working parts hardened and ground steel. External surfaces electroless nickel plated.
Standard housing material	Steel
Mounting position	Line mounted
Weight	5.42 kg (11.94 lbs)
Seal kit	SK688 (Nitrile) SK688V (Viton®)
Filtration	BS5540/4 Class 18/13 (25 micron nominal)
Temperature range	-30°C to +90°C (-22° to +194°F)
Internal leakage	4 milliliters/min nominal (60 dpm)
Nominal viscosity range	5 to 500 cSt

Viton is a registered trademark of E.I. DuPont.

Pressure drop

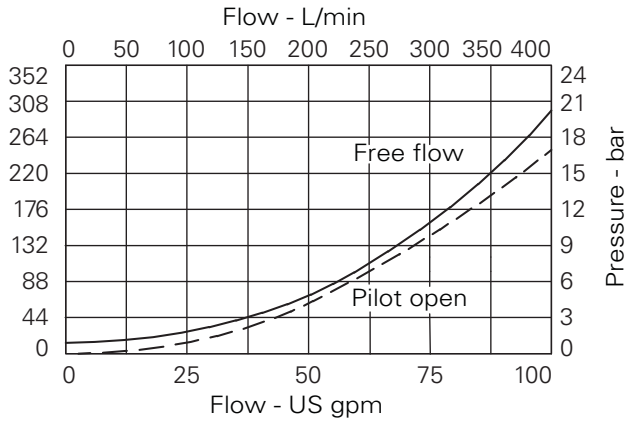

Where measurements are critical request certified drawings. We reserve the right to change specifications without notice.

1CEESH350 - Dual overcenter valve

Pilot assisted relief with brake shuttle
300 L/min (80 USgpm) • 270 bar (4000 psi)

Model code

1CEESH350 – F 10W – 35 S 3 377

1 2 3 4 5 6 7

1 Basic code

1CEESH350 - Cartridges and Body

2 Adjustment means

F - Screw adjustment

3 Port size

Code	Port size	Housing number - body only
		Steel
10W	1 1/4" BSP Valve & Cyl Port 1/4" BSP Pilot Port	CXP22297-10W-S-377

4 Pressure range @4.8 L/min

Note: Code based on pressure in bar.

35 - 70-350 bar.
Std setting 210 bar

Std setting made at 4.8 L/min

5 Seals

S - Nitrile (For use with most industrial hydraulic oils.

SV - Viton (For high temperature and most special fluid applications

6 Pilot ratio

3 - 3:1
8 - 8:1

7 Body material

377 - Steel

Dimensions

mm (inch)

Complete valve
1 1/4" Ports
Basic Code
1CEESH350
Internally Cross Piloted

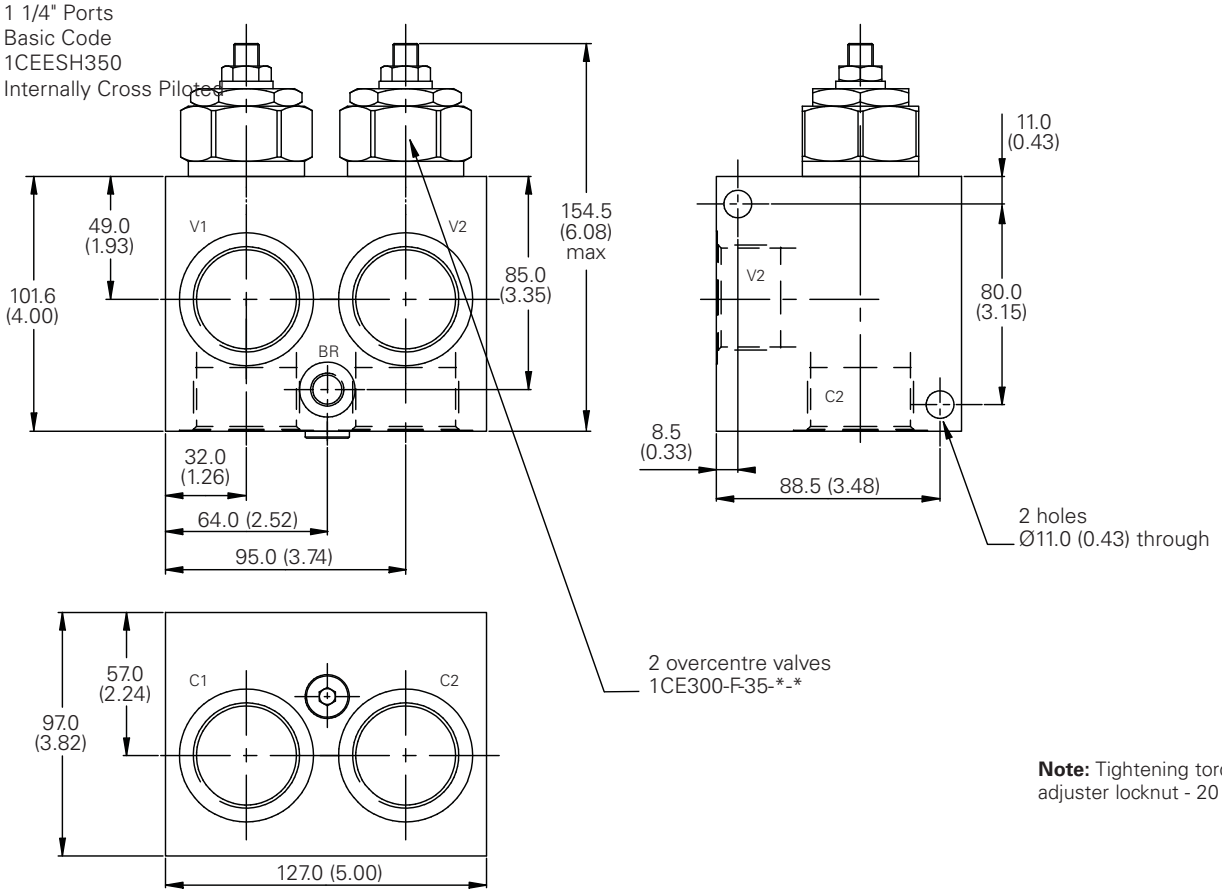

Note: Tightening torque of "F" adjuster locknut - 20 to 25 Nm.

F

Where measurements are critical request certified drawings. We reserve the right to change specifications without notice.

1CEEC35 - Motion control and lock valve

Pilot assisted relief
30 L/min (8 USgpm) • 270 bar (4000 psi)

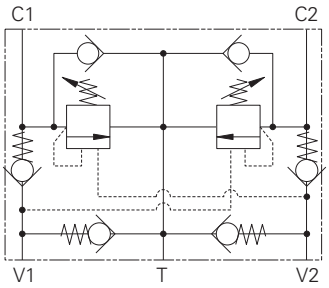

Operation

The check section allows free flow into the actuator then holds and locks the load against movement. The pilot assisted relief valve section will give controlled movement when pilot pressure is applied. The relief section is normally set to open at a pressure at least 1.3 times the maximum load induced pressure but the pressure required to open the valve and allow movement depends on the pilot ratio of the valve. For optimization of load control and energy usage, a choice of pilot ratios is available.

The pressure required to open the valve and start actuator movement can be calculated as follows:

$$\text{Pilot Pressure} = \frac{\text{(Relief Setting) - (Load Pressure)}}{\text{Pilot Ratio}}$$

A system of check valves allows crossline relief for dynamic applications with the optional make up facility to compensate for any change in system volume.

Features

These valves provide complete circuit control and protection in a single valve body, reducing installation time and cost. Smooth, safe performance of dual direction actuators.

Pilot ratio

2.5:1 Best suited for extremely unstable applications such as long booms or flexible frameworks.

5:1 (standard) Best suited for applications where the load varies and machine structure can induce instability.

10:1 Best suited for applications where the load remains relatively constant.

Description

Motion control and lock valves give static and dynamic control by regulating the flow into and out of hydraulic actuators. When installed close to an actuator, the valve can stop runaway in the event of hose burst. The valves also give dual thermal and overload relief protection.

A low pressure tank or charge line may be connected to the T port to provide a make-up flow to either actuator port.

F

Performance data

Ratings and specifications

Figures based on: Oil Temp = 40°C Viscosity = 32 cSt (150 SUS)	
Rated flow	30 L/min (8 USgpm)
Max relief pressure	350 bar (5000 psi) **(35)**, 225 bar (3260 psi) **(20)**
Max load induced pressure	270 bar (4000 psi) **(35)**, 160 bar (2300 psi) **(20)**
Cartridge material	Working parts hardened and ground steel. External surfaces electroless nickel plated.
Standard housing material	Steel
Mounting position	Line mounted
Weight	2.03 kg (4.50 lbs)
Seal kit	SK815 (Nitrile) SK815V (Viton®)
Filtration	BS5540/4 Class 18/13 (25 micron nominal)
Temperature range	-30° to +90°C (-22° to +194°F)
Internal leakage	0.3 milliliters/min nominal (5 dpm)
Nominal viscosity range	5 to 500 cSt

Viton is a registered trademark of E.I. DuPont.

Pressure drop

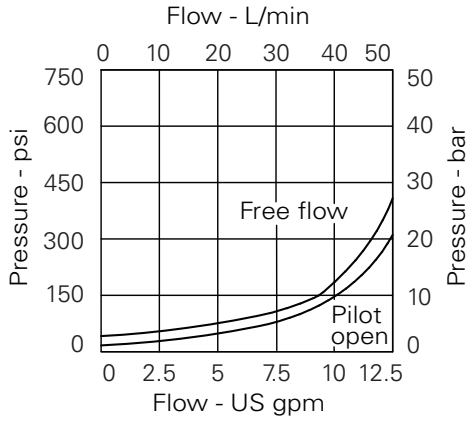

2:5:1 and 5:1 version

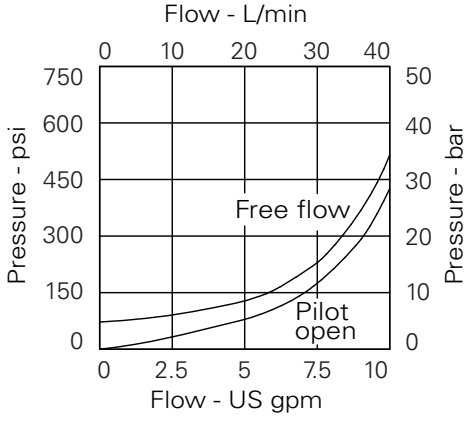

10:1 version

Where measurements are critical request certified drawings. We reserve the right to change specifications without notice.

Model code

1CEEC35	–	F	3W	–	35	S	5	377
1		2	3		4	5	6	7

1 Basic code

1CEEC35 - Cartridge and Body

2 Adjustment means

F - Screw adjustment
N - Fixed - State pressure setting required

For fixed versions add setting in 10 bar increments to end of part number. Subject to a ±10% tolerance.

3 Port size - bodied valves only

Code	Port size	Housing number
		Steel
3W	**3/8"** BSP	BXP16247-3W-S-377

4 Pressure range @ 4.8 L/min

Note: Code based on pressure in bar.

20	-	(2.5:1 and 5:1)	70-210 bar	Std setting 100 bar
		(10:1)	100-210 bar	Std setting 100 bar
35	-	(2.5:1 and 5:1)	100-350 bar	Std setting 210 bar
		(10:1)	120-350 bar	Std setting 210 bar

Std setting made a 4.8 L/min made at 4.8 L/min

5 Seals

S - Nitrile (For use with most industrial hydraulic oils.

SV - Viton (For high temperature and most special fluid applications

6 Pilot ratio

2 - 2.5:1
5 - 5:1
10 - 10:1

Other ratios available upon request

7 Body material

377 - Steel

F

Dimensions

mm (inch)

Complete valve
3/8" Ports Ports
Basic Code
1CEEC35

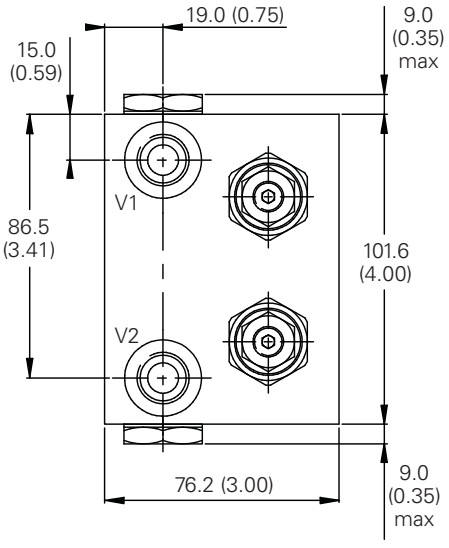

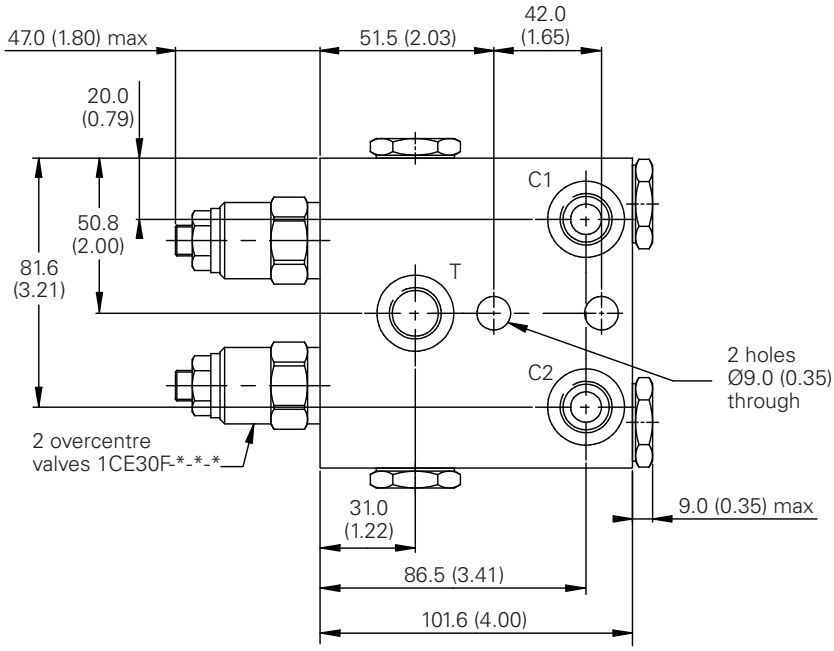

Note: Tightening torque of "F" adjuster locknut - 20 to 25 Nm.

Where measurements are critical request certified drawings. We reserve the right to change specifications without notice.

1CEEC95 - Motion control & lock valve

Pilot assisted relief
95 L/min (25 USgpm) • 270 bar (4000 psi)

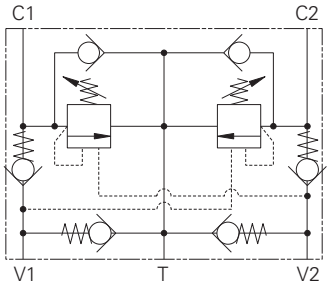

Operation

The check section allows free flow into the actuator then holds and locks the load against movement. The pilot assisted relief valve section will give controlled movement when pilot pressure is applied. The relief section is normally set to open at a pressure at least 1.3 times the maximum load induced pressure but the pressure required to open the valve and allow movement depends on the pilot ratio of the valve. For optimization of load control and energy usage, a choice of pilot ratios is available.

The pressure required to open the valve and start actuator movement can be calculated as follow

$$\text{Pilot Pressure} = \frac{\text{(Relief Setting) - (Load Pressure)}}{\text{Pilot Ratio}}$$

A system of check valves allows crossline relief for dynamic applications with the optional make up facility to compensate for any change in system volume.

Features

These valves provide complete circuit control and protection in a single valve body, reducing installation time and cost. Smooth, safe performance of dual direction actuators.

Pilot ratio

4:1 Best suited for applications where the load varies and machine structure can induce instability.

8:1 Best suited for applications where the load remains relatively constant.

Description

Motion control and lock valves give static and dynamic control by regulating the flow into and out of hydraulic actuators. When installed close to an actuator, the valve can stop runaway in the event of hose burst. The valves also give dual thermal and overload relief protection.

A low pressure tank or charge line may be connected to the T port to provide a make-up flow to either actuator port.

Performance data

Ratings and specifications

Figures based on: Oil Temp = 40°C Viscosity = 32 cSt (150 SUS)	
Rated flow	1CEEC95 95 L/min (25 USgpm)
Max relief pressure	350 bar (5000 psi) **(35)**, 225 bar (3260 psi) **(20)**
Max load induced pressure	270 bar (4000 psi) **(35)**, 160 bar (2300 psi) **(20)**
Cartridge material	Working parts hardened and ground steel. External surfaces electroless nickel plated.
Standard housing material	Steel
Mounting position	Line mounted
Weight	3.70 kg (8.20 lbs)
Seal kit	SK814 (Nitrile) SK814V (Viton®)
Filtration	BS5540/4 Class 18/13 (25 micron nominal)
Temperature range	-30° to +90°C (-22° to +194°F)
Internal leakage	0.3 milliliters/min nominal (5 dpm)
Nominal viscosity range	5 to 500 cSt

Viton is a registered trademark of E.I. DuPont.

Pressure drop

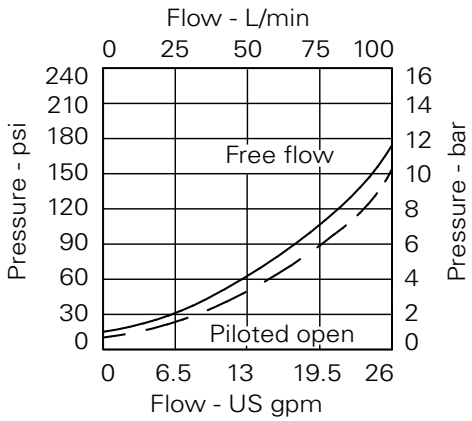

4:1 version

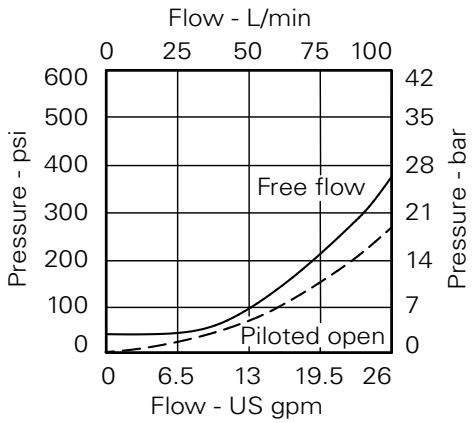

8:1 version

Where measurements are critical request certified drawings. We reserve the right to change specifications without notice.

1CEEC95 - Motion control & lock valve

Pilot assisted relief
95 L/min (25 USgpm) • 270 bar (4000 psi)

Model code

1CEEC95	–	F	3W	–	35	S	5	377
1		2	3		4	5	6	7

1 Basic code

1CEEC95 - Cartridge and Body

2 Adjustment means

F - Screw adjustment
N - Fixed - State pressure setting required

For fixed versions add setting in 10 bar increments to end of part number. Subject to a ±10% tolerance.

3 Port size

Code	Port size	Housing number- body only
		Steel
6W	**3/4"** BSP	BXP16248-6W-S-377

4 Pressure range @ 4.8 L/min

Note: Code based on pressure in bar.

35 - (4:1 and 8:1)
200-350 bar
Std setting 210 bar

Std setting made at 4.8 L/min

5 Seals

S - Nitrile (For use with most industrial hydraulic oils.
SV - Viton (For high temperature and most special fluid applications made at 4.8 L/min

6 Pilot ratio

4 - 4:1
8 - 8:1

Other ratios available upon request

7 Body material

377 - Steel

Dimensions

mm (inch)

Complete valve
3/4" Ports
Basic Code
1CEEC95
Internally Cross Piloted

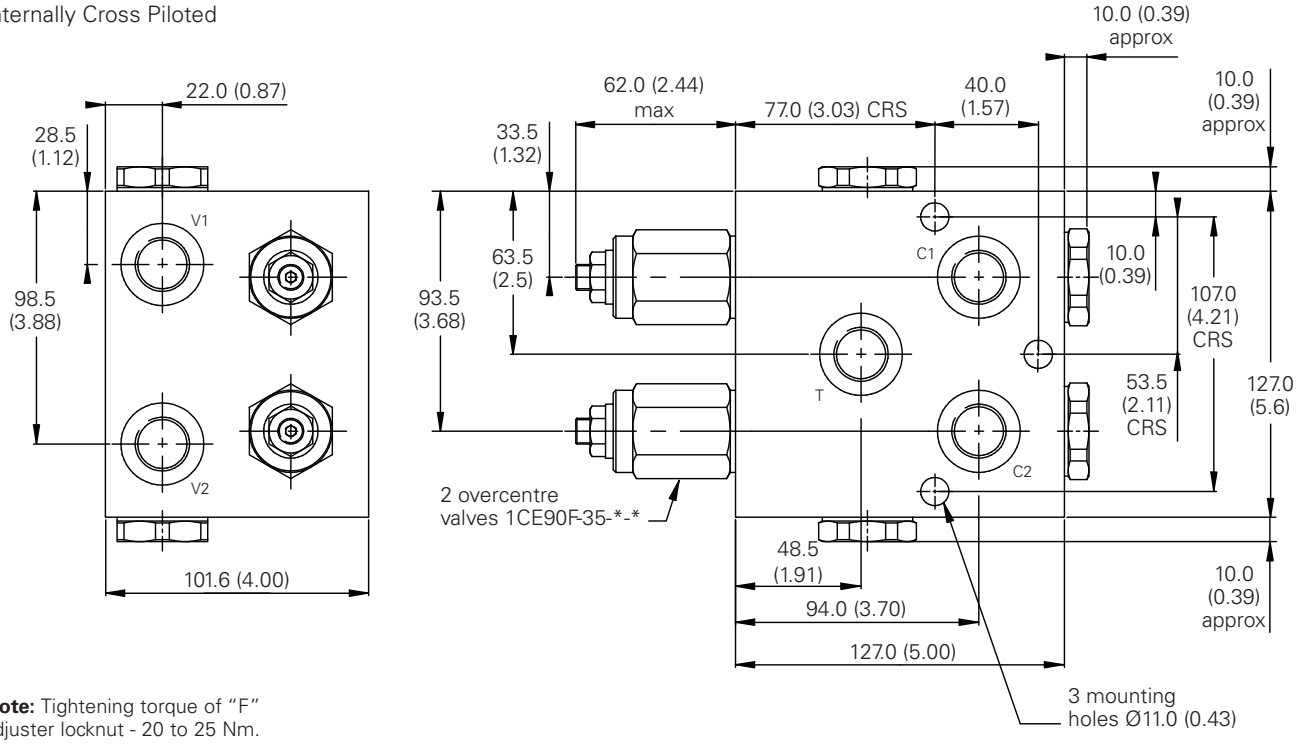

Note: Tightening torque of "F" adjuster locknut - 20 to 25 Nm.

Where measurements are critical request certified drawings. We reserve the right to change specifications without notice.

F

1CEEC150 - Motion control & lock valve

Pilot assisted relief
150 L/min (40 USgpm) • 270 bar (4000 psi)

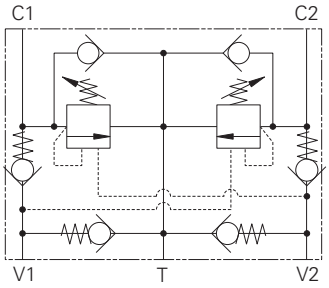

Operation

The check section allows free flow into the actuator then holds and locks the load against movement. The pilot assisted relief valve section will give controlled movement when pilot pressure is applied. The relief section is normally set to open at a pressure at least 1.3 times the maximum load induced pressure but the pressure required to open the valve and allow movement depends on the pilot ratio of the valve. For optimization of load control and energy usage, a choice of pilot ratios is available.

The pressure required to open the valve and start actuator movement can be calculated as follows:

$$\text{Pilot Pressure} = \frac{\text{(Relief Setting) - (Load Pressure)}}{\text{Pilot Ratio}}$$

A system of check valves allows crossline relief for dynamic applications with the optional make up facility to compensate for any change in system volume.

Features

These valves provide complete circuit control and protection in a single valve body, reducing installation time and cost. Smooth, safe performance of dual direction actuators.

Pilot ratio

3.5:1 Best suited for applications where the load varies and machine structure can induce instability.

Description

Motion control and lock valves give static and dynamic control by regulating the flow into and out of hydraulic actuators. When installed close to an actuator, the valve can stop runaway in the event of hose burst. The valves also give dual thermal and overload relief protection.

A low pressure tank or charge line may be connected to the T port to provide a make-up flow to either actuator port.

Performance data

Ratings and specifications

Figures based on: Oil Temp = 40°C Viscosity = 32 cSt (150 SUS)	
Rated flow	150 L/min (40 USgpm)
Max relief pressure	350 bar (5000 psi)
Max load induced pressure	270 bar (4000 psi)
Cartridge material	Working parts hardened and ground steel. External surfaces zinc plated.
Standard housing materials	Steel
Mounting position	Line mounted
Weight	3.7 kg (8.2 lbs)
Seal kit	SK813 (Nitrile) SK813V (Viton®)
Filtration	BS5540/4 Class 18/13 (25 micron nominal)
Temperature range	-30° to +90°C (-22° to +194°F)
Internal leakage	0.3 ml/min (5 dpm)
Nominal viscosity range	5 to 500 cSt

Viton is a registered trademark of E.I. DuPont.

Pressure drop

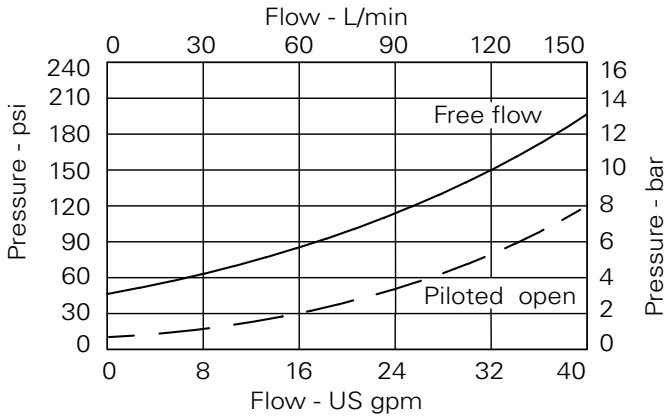

Where measurements are critical request certified drawings. We reserve the right to change specifications without notice.

Model code

1CEEC150 – F 8W – 35 S 3 377

1 2 3 4 5 6 7

1 Basic code

1CEEC150 - Cartridges and body

2 Adjustment means

F - Screw adjustment

For fixed versions add setting in 10 bar increments to end of part number. Subject to a ±10% tolerance.

3 Port size

Code	Port size	Housing number- body only
		Steel
8W	1" BSP Valve & Cyl Port. 1/4" BSP Brake Port	BXP15687-8W-S-377

4 Pressure range @ 4.8 L/min

Note: Code based on pressure in bar.

35 - 70-35 bar
Std setting 210 bar

Std setting made at 4.8 L/min

5 Seal material

S - Nitrile (For use with most industrial hydraulic oils.

SV - Viton (For high temperature and most special fluid applications made at 4.8 L/min

6 Pilot ratio

3 - 3.5:1

7 Body material

377 - Steel

F

Dimensions

mm (inch)

Complete valve
1" Ports
Basic Code
1CEEC150

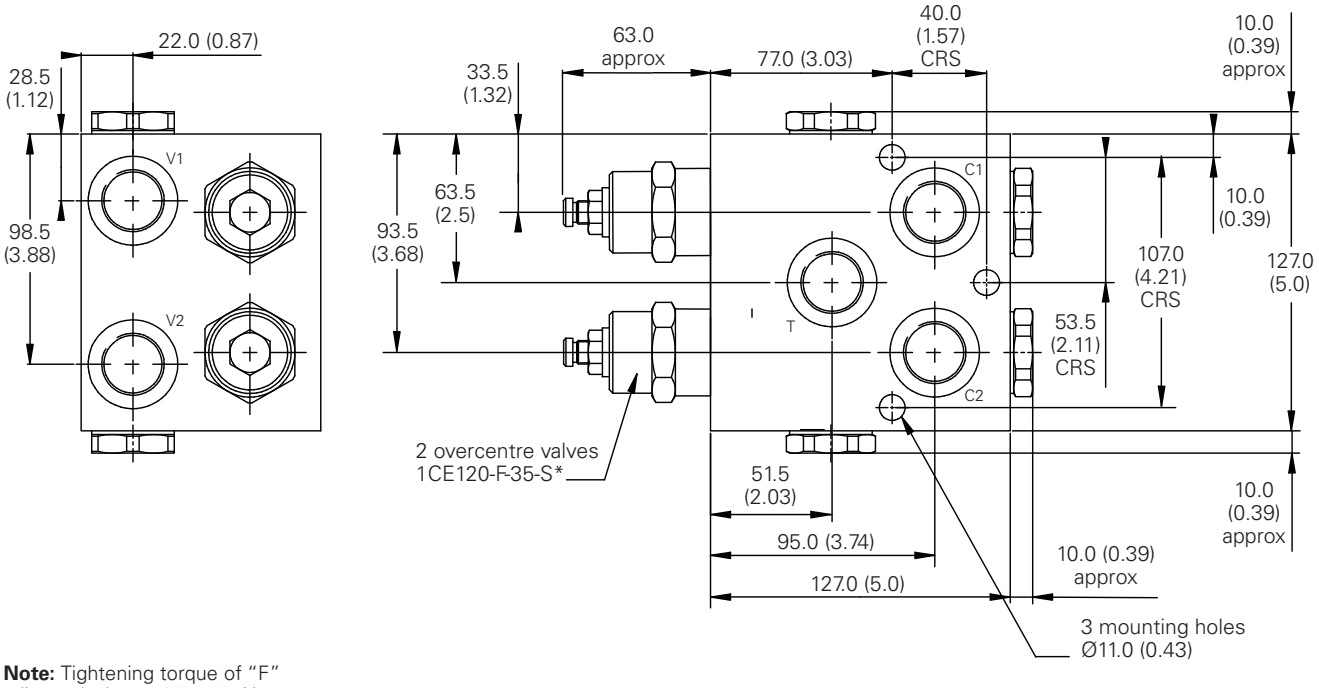

Note: Tightening torque of "F" adjuster locknut - 20 to 25 Nm.

Where measurements are critical request certified drawings. We reserve the right to change specifications without notice.

1CEEC350 - Motion control & lock valve

Pilot assisted relief
300 L/min (80 USgpm) • 270 bar (4000 psi)

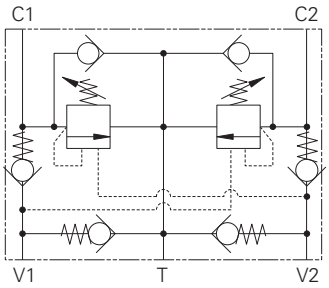

Operation

The check section allows free flow into the actuator then holds and locks the load against movement. The pilot assisted relief valve section will give controlled movement when pilot pressure is applied. The relief section is normally set to open at a pressure at least 1.3 times the maximum load induced pressure but the pressure required to open the valve and allow movement depends on the pilot ratio of the valve. For optimization of load control and energy usage, a choice of pilot ratios is available.

The pressure required to open the valve and start actuator movement can be calculated as follows:

$$\text{Pilot Pressure} = \frac{\text{(Relief Setting) - (Load Pressure)}}{\text{Pilot Ratio}}$$

A system of check valves allows crossline relief for dynamic applications with the optional make up facility to compensate for any change in system volume.

Features

These valves provide complete circuit control and protection in a single valve body, reducing installation time and cost. Smooth, safe performance of dual direction actuators.

Pilot ratio

3:1 Best suited for applications where the load varies and machine structure can induce instability.

8:1 Best suited for applications where the load remains relatively constant.

Description

Motion control and lock valves give static and dynamic control by regulating the flow into and out of hydraulic actuators. When installed close to an actuator, the valve can stop runaway in the event of hose burst. The valves also give dual thermal and overload relief protection.

A low pressure tank or charge line may be connected to the T port to provide a make-up flow to either actuator port.

Performance data

Ratings and specifications

Figures based on: Oil Temp = 40°C Viscosity = 32 cSt (150 SUS)	
Rated flow	300 L/min (80 USgpm)
Max relief pressure	350 bar (5000 psi)
Max load induced pressure	270 bar (4000 psi)
Cartridge material	Working parts hardened and ground steel. External surfaces zinc plated.
Standard housing materials	Steel
Mounting position	Line mounted
Weight	8.2 kg (18.0 lbs)
Seal kit	SK635 (Nitrile) SK635V (Viton®)
Filtration	BS5540/4 Class 18/13 (25 micron nominal)
Temperature range	-30° to +90°C (-22° to +194°F)
Internal leakage	4 ml/min (60 dpm)
Nominal viscosity range	5 to 500 cSt

Viton is a registered trademark of E.I. DuPont.

Pressure drop

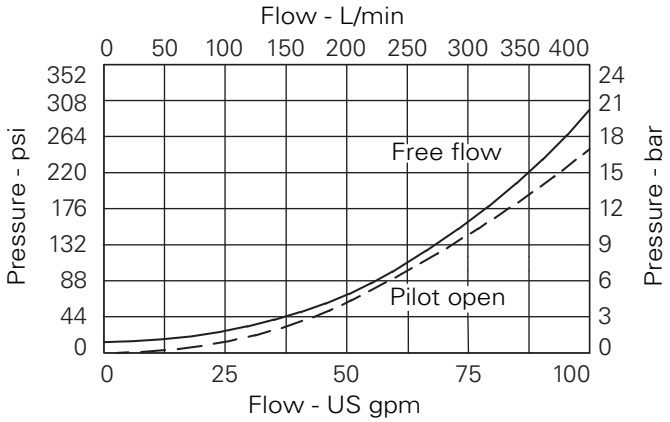

Where measurements are critical request certified drawings. We reserve the right to change specifications without notice.

1CEEC350 - Motion control & lock valve

Pilot assisted relief
300 L/min (80 USgpm) • 270 bar (4000 psi)

Model code

1CEEC350 – F 10W – 35 S 3 377

1 2 3 4 5 6 7

1 Basic code

1CEEC350 - Cartridges and body

2 Adjustment means

F - Screw adjustment

For fixed versions add setting in 10 bar increments to end of part number. Subject to a ±10% tolerance.

3 Port sizes - bodied valves only

Code	Port size	Housing number
		Steel Single
10W	1 1/4" BSP valve & cyl port. 1/4" BSP brake port	DXP16844-10W-S-377

4 Pressure range @ 4.8 L/min

Note: Code based on pressure in bar.

35 - 70-35 bar
Std setting 210 bar

Std setting made at 4.8 L/min

5 Seals

S - Nitrile (For use with most industrial hydraulic oils.

SV - Viton (For high temperature and most special fluid applications made at 4.8 L/min

6 Pilot ratio

3 - 3:1
8 - 8:1

7 Housing material

377 - Steel

F

Dimensions

mm (inch)

Complete valve
1 1/4" Ports
Basic Code
1CEEC350

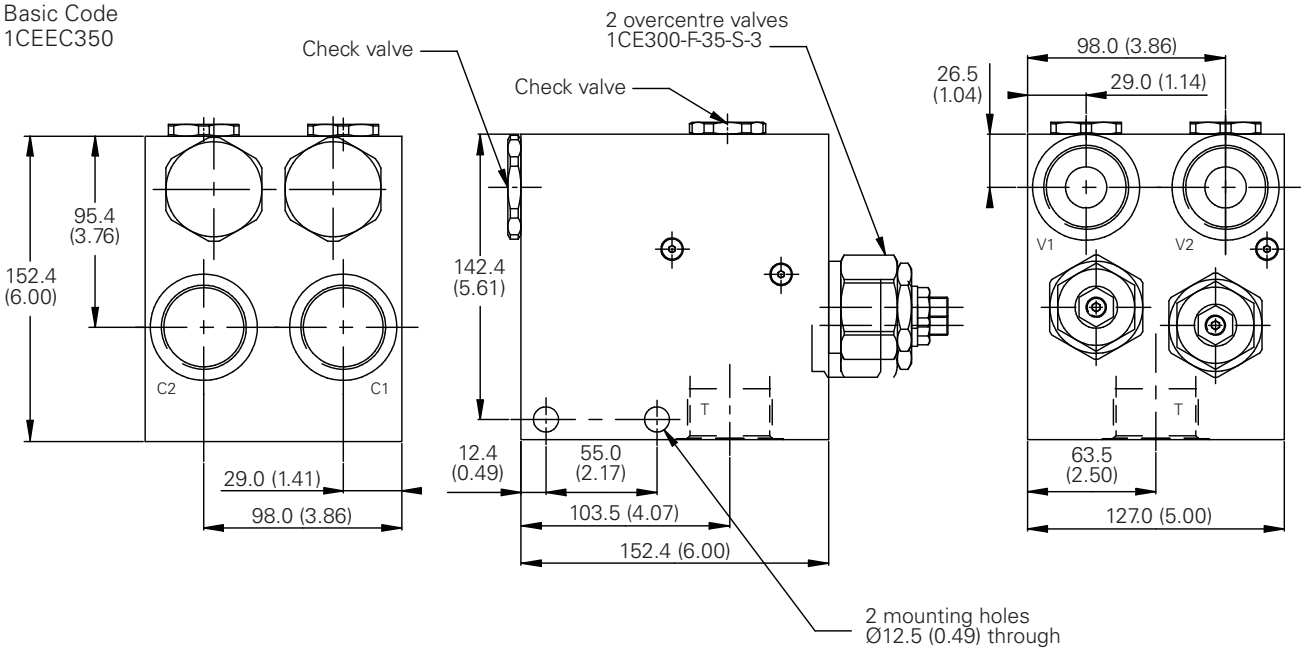

Note: Tightening torque of "F" adjuster locknut - 20 to 25 Nm.

Where measurements are critical request certified drawings. We reserve the right to change specifications without notice.

1CEECSH35 - Motion control & lock valve

Pilot assisted relief with brake shuttle
30 L/min (8 USgpm) • 270 bar (4000 psi)

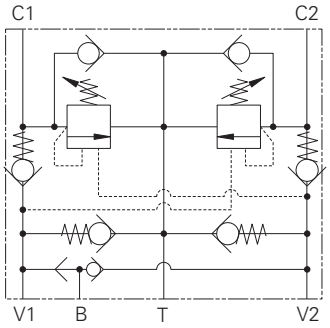

Operation

The check section allows free flow into the actuator then holds and locks the load against movement. The pilot assisted relief valve section will give controlled movement when pilot pressure is applied. The relief section is normally set to open at a pressure at least 1.3 times the maximum load induced pressure but the pressure required to open the valve and allow movement depends on the pilot ratio of the valve. For optimization of load control and energy usage, a choice of pilot ratios is available.

The pressure required to open the valve and start actuator movement can be calculated as follows:

$$\text{Pilot Pressure} = \frac{\text{(Relief Setting) - (Load Pressure)}}{\text{Pilot Ratio}}$$

A system of check valves allows crossline relief for dynamic applications with the optional make up facility to compensate for any change in system volume.

Feature

This valve provides complete circuit control and protection as with the standard motion control valve but has the addition of a brake release shuttle and brake port contained in a single body.

Pilot ratio

2.5:1 Best suited for extremely unstable applications such as long booms or flexible frameworks.

5:1 (standard) Best suited for applications where load varies and machine structure can induce instability.

10:1 Best suited for applications where the load remains relatively constant.

Description

Motion control and lock valves give static and dynamic control by regulating the flow into and out of hydraulic actuators. When installed close to an actuator, the valve can stop runaway in the event of hose burst. The valves also give dual thermal and overload relief protection.

A low pressure tank or charge line may be connected to the T port to provide a make-up flow to either actuator port.

The shuttle valve provides a signal from the high pressure side of the actuator to release sprung applied brakes.

Performance data

Ratings and specifications

Figures based on: Oil Temp = 40°C Viscosity = 32 cSt (150 SUS)	
Rated flow	30 L/min (8 USgpm)
Max relief pressure	350 bar (5000 psi)
Max load induced pressure	270 bar (4000 psi)
Cartridge material	Working parts hardened and ground steel. External surfaces electroless nickel plated.
Standard housing materials	Steel
Mounting position	Line mounted
Weight	2.03 kg (4.5 lbs)
Seal kit	SK815 (Nitrile) SK815V (Viton®)
Filtration	BS5540/4 Class 18/13 (25 micron nominal)
Temperature range	-30° to +90°C (-22° to +194°F)
Internal leakage	0.3 ml/min (5 dpm)
Nominal viscosity range	5 to 500 cSt

Viton is a registered trademark of E.I. DuPont.

Pressure drop

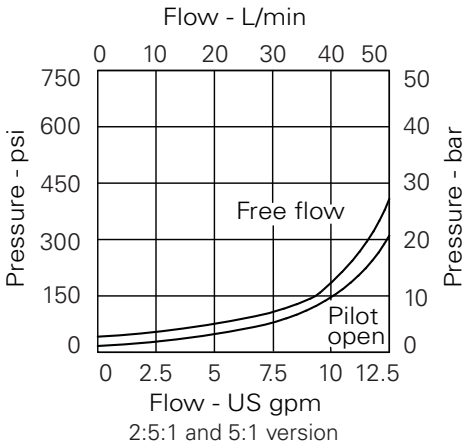

2:5:1 and 5:1 version

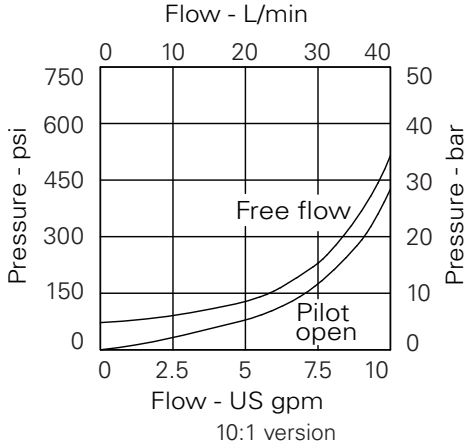

10:1 version

Where measurements are critical request certified drawings. We reserve the right to change specifications without notice.

1CEECSH35 - Motion control & lock valve

Pilot assisted relief with brake shuttle
30 L/min (8 USgpm) • 270 bar (4000 psi)

Model code

1CEECSH35 – F 3W – 35 S 5 377

1 2 3 4 5 6 7

1 Function

1CEECSH35 - Cartridges and body

2 Adjustment means

F - Screw adjustment
N - Fixed - State pressure setting required

For fixed versions add setting in 10 bar increments to end of part number. Subject to a ±10% tolerance.

3 Port sizes - bodied valves only

Code	Port size	Housing number - sub assembly
		Steel
3W	3/8" BSP Valve & Cyl Port. 1/4" BSP Brake Port	CXP15947-3W-S-377

4 Pressure range @ 4.8 L/min

Note: Code based on pressure in bar.
35 - (2.5:1 and 5:1) 100-350 bar Std setting 210 bar (10:1) 120-350 bar Std setting 210 bar

Std setting made at 4.8 L/min

5 Seals

S - Nitrile (For use with most industrial hydraulic oils.
SV - Viton (For high temperature and most special fluid applications made at 4.8 L/min

6 Pilot ratios

2 - 2.5:1
5 - 5:1 (Standard)
10 - 10:1

7 Body material

377 - Steel

F

Dimensions

mm (inch)

Complete valve
3/8" Ports
Basic Code
1CEECSH35
Internally Cross Piloted

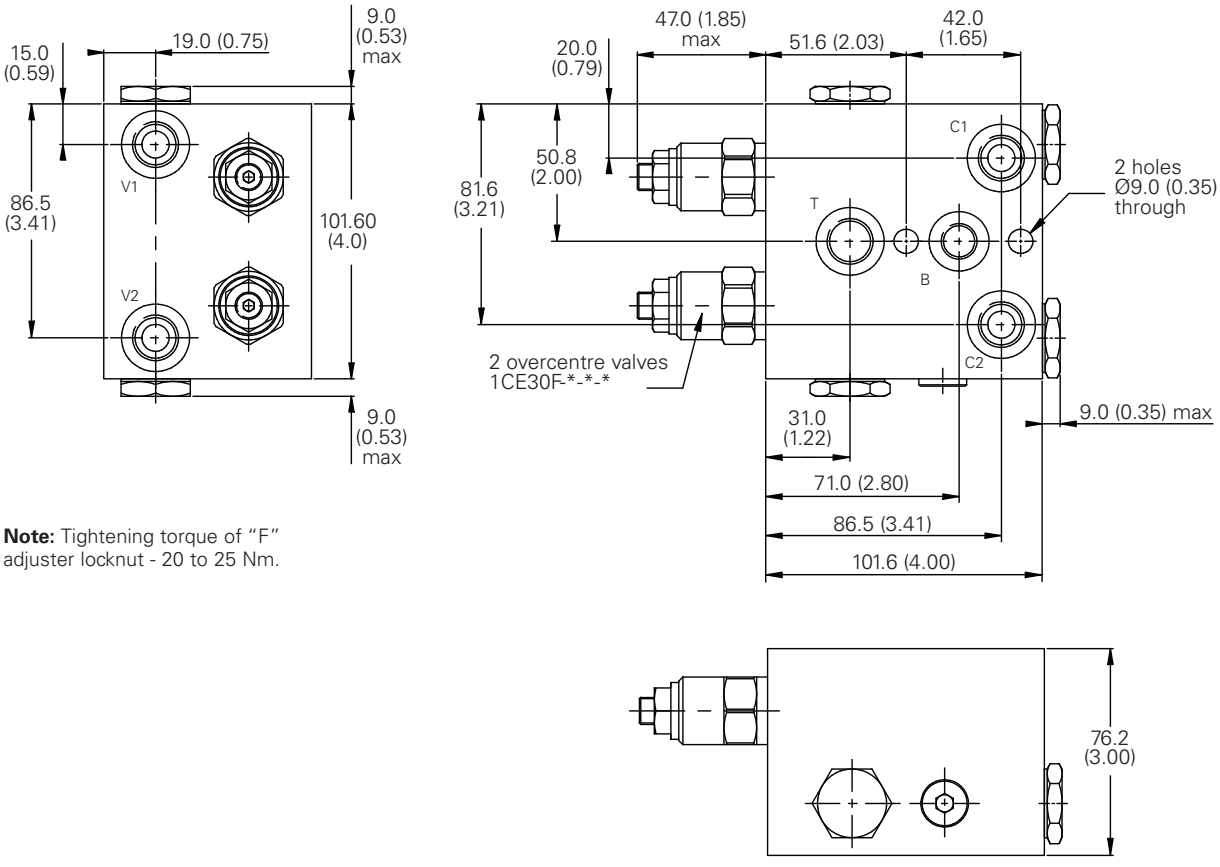

Note: Tightening torque of "F" adjuster locknut - 20 to 25 Nm.

Where measurements are critical request certified drawings. We reserve the right to change specifications without notice.

1CEECSH95 - Motion control & lock valve

Pilot assisted relief with brake shuttle
95 L/min (25 USgpm) • 270 bar (4000 psi)

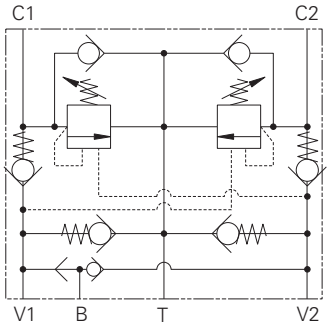

Operation

The check section allows free flow into the actuator then holds and locks the load against movement. The pilot assisted relief valve section will give controlled movement when pilot pressure is applied. The relief section is normally set to open at a pressure at least 1.3 times the maximum load induced pressure but the pressure required to open the valve and allow movement depends on the pilot ratio of the valve. For optimization of load control and energy usage, a choice of pilot ratios is available.

The pressure required to open the valve and start actuator movement can be calculated as follows:

$$\text{Pilot Pressure} = \frac{\text{(Relief Setting) - (Load Pressure)}}{\text{Pilot Ratio}}$$

A system of check valves allows crossline relief for dynamic applications with the optional make up facility to compensate for any change in system volume.

Features

This valve provides complete circuit control and protection as with the standard motion control valve but has the addition of a brake release shuttle and brake port contained in a single body.

Pilot ratio

4:1 Best suited for applications where load varies and machine structure can induce instability.

8:1 Best suited for applications where the load remains relatively constant.

Description

Motion control and lock valves give static and dynamic control by regulating the flow into and out of hydraulic actuators. When installed close to an actuator, the valve can stop runaway in the event of hose burst. The valves also give dual thermal and overload relief protection.

A low pressure tank or charge line may be connected to the T port to provide a make-up flow to either actuator port.

The shuttle valve provides a signal from the high pressure side of the actuator to release sprung applied brakes.

Performance data

Ratings and specifications

Figures based on: Oil Temp = 40°C Viscosity = 32 cSt (150 SUS)	
Rated flow	95 L/min (25 USgpm)
Max relief pressure	350 bar (5000 psi) **(35)**, 225 bar (3260 psi) **(20)**
Max load induced pressure	270 bar (4000 psi) **(35)**,160 bar (2300 psi) **(20)**
Cartridge material	Working parts hardened and ground steel. External surfaces electroless nickel plated.
Standard housing materials	Steel
Mounting position	Line mounted
Weight	3.70 kg (8.20 lbs)
Seal kit	SK814 (Nitrile) SK814V (Viton®)
Filtration	BS5540/4 Class 18/13 (25 micron nominal)
Temperature range	-30° to 90°C(-22° to +194°F)
Internal leakage	0.3 ml/min (5 dpm)
Nominal viscosity range	5 to 500 cSt

Viton is a registered trademark of E.I. DuPont.

Pressure drop

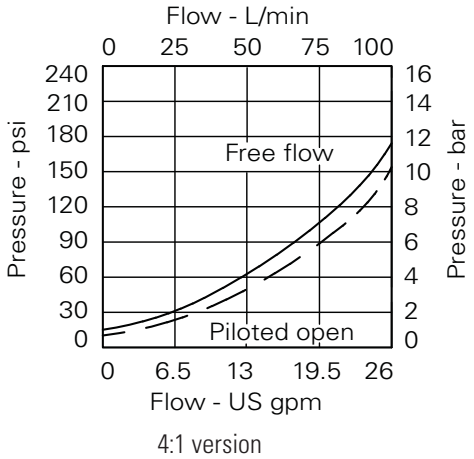

4:1 version

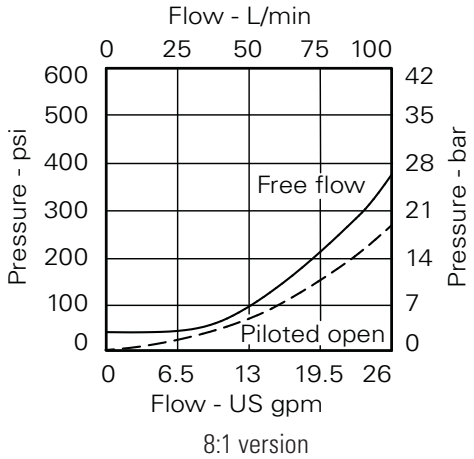

8:1 version

Where measurements are critical request certified drawings. We reserve the right to change specifications without notice.

1CEECSH95 - Motion control & lock valve

Pilot assisted relief with brake shuttle
95 L/min (25 USgpm) • 270 bar (4000 psi)

Model code

1CEECSH95 – F 6W – 35 S 4 377

1 2 3 4 5 6 7

1 Basic code

1CEECSH95 - Cartridges and body

2 Adjustment means

F - Screw adjustment
N - Fixed - state pressure setting required.

For fixed versions add setting in 10 bar increments to end of part number. Subject to a ±10% tolerance.

3 Port size

Code	Port size	Housing number - body only
		Steel
6W	3/4" BSP Valve & Cyl Port. 1/4" BSP Brake Port	BXP15936-6W-S-377

4 Pressure range @ 4.8 L/min

Note: Code based on pressure in bar.
20 - 70-225 bar
Std setting 100 bar.
35 - 200-350 bar
Std setting 210 bar.

Std setting made at 4.8 L/min

5 Seals

S - Nitrile (For use with most industrial hydraulic oils.
SV - Viton (For high temperature and most special fluid applications made at 4.8 L/min

6 Pilot ratio

4 - 4:1 (Standard)
8 - 8:1

7 Body material

377 - Steel

Dimensions

mm (inch)

Complete valve
3/4" Ports
Basic Code
1CEECSH95
Internally Cross Piloted

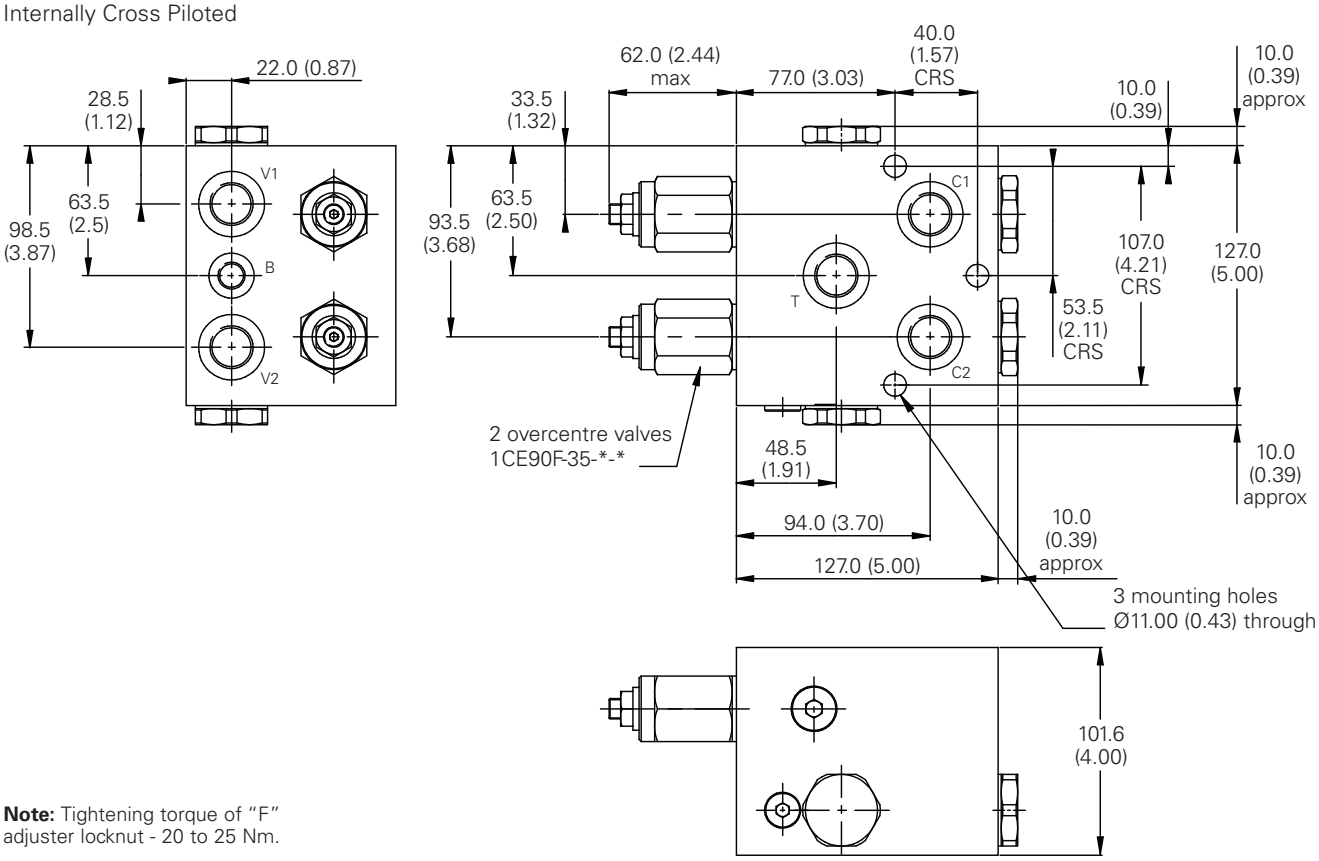

Note: Tightening torque of "F" adjuster locknut - 20 to 25 Nm.

Where measurements are critical request certified drawings. We reserve the right to change specifications without notice.

F

1CEECSH150 - Motion control & lock valve

Pilot assisted relief with brake shuttle
150 L/min (40 USgpm) • 270 bar (4000 psi)

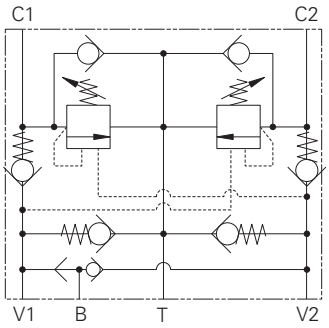

Operation

The check section allows free flow into the actuator then holds and locks the load against movement. The pilot assisted relief valve section will give controlled movement when pilot pressure is applied. The relief section is normally set to open at a pressure at least 1.3 times the maximum load induced pressure but the pressure required to open the valve and allow movement depends on the pilot ratio of the valve. For optimization of load control and energy usage, a choice of pilot ratios is available.

The pressure required to open the valve and start actuator movement can be calculated as follows:

$$\text{Pilot Pressure} = \frac{\text{(Relief Setting) - (Load Pressure)}}{\text{Pilot Ratio}}$$

A system of check valves allows crossline relief for dynamic applications with the optional make up facility to compensate for any change in system volume.

Features

This valve provides complete circuit control and protection as with the standard motion control valve but has the addition of a brake release shuttle and brake port contained in a single body.

Pilot ratio

3.5:1 Best suited for applications where load varies and machine structure can induce instability.

Description

Motion control and lock valves give static and dynamic control by regulating the flow into and out of hydraulic actuators. When installed close to an actuator, the valve can stop runaway in the event of hose burst. The valves also give dual thermal and overload relief protection.

A low pressure tank or charge line may be connected to the T port to provide a make-up flow to either actuator port.

The shuttle valve provides a signal from the high pressure side of the actuator to release sprung applied brakes.

Performance data

Ratings and specifications

Performance data is typical with fluid at 32 cST (150 SUS)	
Rated flow	150 L/min (40 USgpm)
Max relief pressure	350 bar (5000 psi)
Max load induced pressure	270 bar (4000 psi)
Cartridge material	Working parts hardened and ground steel External surfaces electroless nickel plated
Standard housing materials	Steel
Mounting position	Line mounted
Weight	3.7 kg (8.2 lbs)
Seal kit	SK813 (Nitrile) SK813V (Viton®)
Filtration	BS5540/4 Class 18/13 (25 micron nominal)
Temperature range	-30° to +90°C (-22° to +194°F)
Internal leakage	0.3 ml/min (5 dpm)
Nominal viscosity range	5 to 500 cSt

Viton is a registered trademark of E.I. DuPont.

Pressure drop

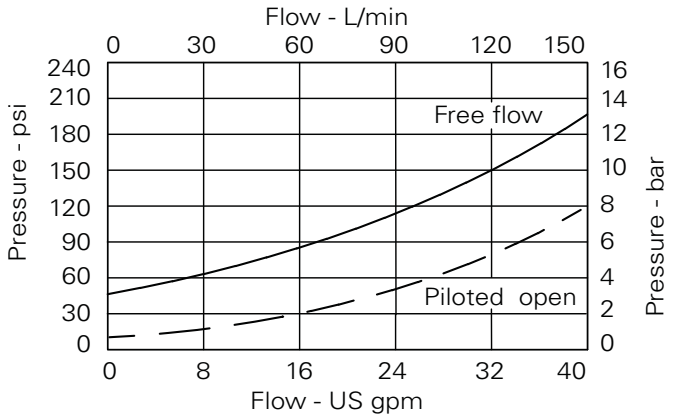

Where measurements are critical request certified drawings. We reserve the right to change specifications without notice.

1CEECSH150 - Motion control & lock valve

Pilot assisted relief with brake shuttle
150 L/min (40 USgpm) • 270 bar (4000 psi)

Model code

1CEECSH150 – F 8W – 35 S 3 377

1 2 3 4 5 6 7

1 Basic code

1CEECSH150 - Cartridges and body

2 Adjustment means

F - Screw adjustment

3 Port size

Code	Port size	Housing number - body only
		Steel
8W	1" BSP valve & cyl port. 1/4" BSP brake port	BXP15930-8W-S-377

4 Pressure range @ 4.8 L/min

Note: Code based on pressure in bar.

35 - 70-35 bar
Std setting 210 bar

Std setting made at 4.8 L/min

5 Seals

S - Nitrile (For use with most industrial hydraulic oils.

SV - Viton (For high temperature and most special fluid applications made at 4.8 L/min

6 Pilot ratio

3 - 3.5:1

7 Body material

377 - Steel

Dimensions

mm (inch)

Complete valve
1 Port
Basic Code
1CEECSH150
Internally Cross Piloted

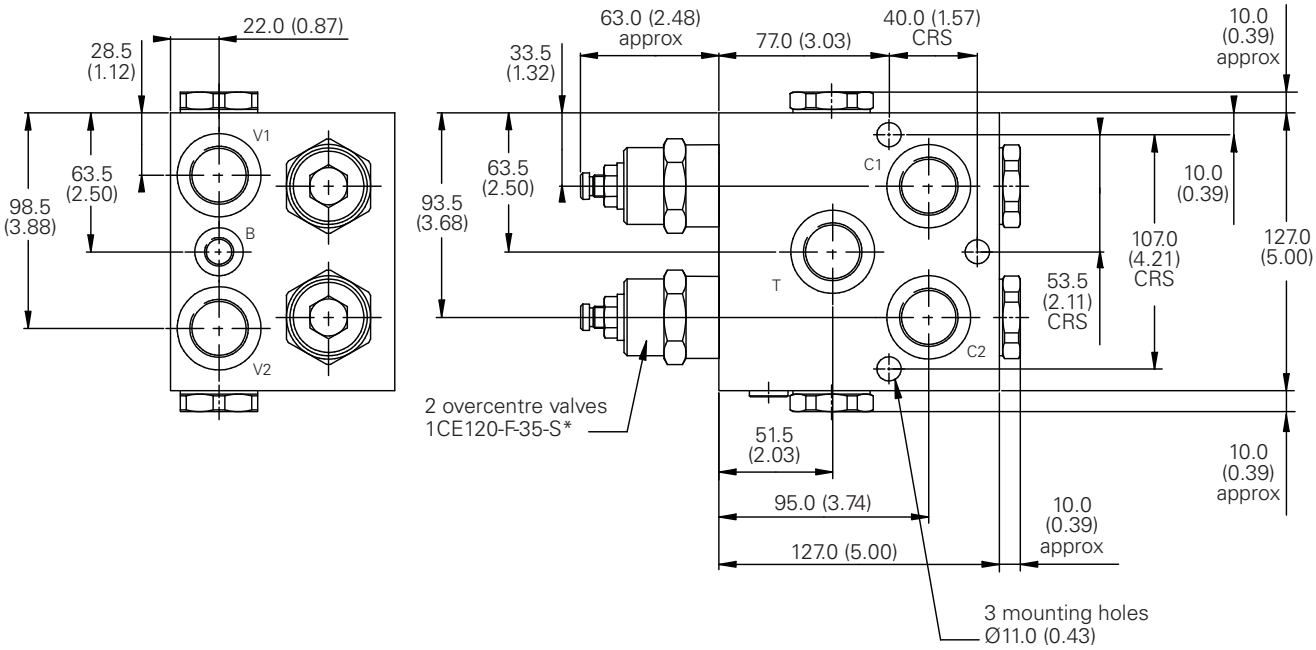

Note: Tightening torque of "F" adjuster locknut - 20 to 25 Nm.

Where measurements are critical request certified drawings. We reserve the right to change specifications without notice.

F

1CEECSH350 - Motion control & lock valve

Pilot assisted relief with brake shuttle
350 L/min (80 USgpm) • 270 bar (4000 psi)

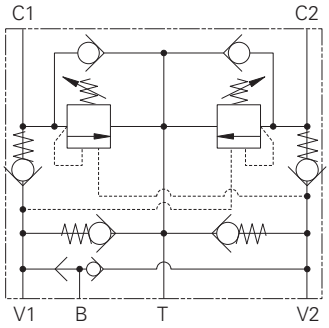

Operation

The check section allows free flow into the actuator then holds and locks the load against movement. The pilot assisted relief valve section will give controlled movement when pilot pressure is applied. The relief section is normally set to open at a pressure at least 1.3 times the maximum load induced pressure but the pressure required to open the valve and allow movement depends on the pilot ratio of the valve. For optimization of load control and energy usage, a choice of pilot ratios is available.

The pressure required to open the valve and start actuator movement can be calculated as ollows:

$$\text{Pilot Pressure} = \frac{\text{(Relief Setting) - (Load Pressure)}}{\text{Pilot Ratio}}$$

A system of check valves allows crossline relief for dynamic applications with the optional make up facility to compensate for any change in system volume.

Features

This valve provides complete circuit control and protection as with the standard motion control valve but has the addition of a brake release shuttle and brake port contained in a single body.

Pilot ratio

3:1 (standard) Best suited for applications where load varies and machine structure can induce instability.

8:1 Best suited for applications where the load remains relatively constant.

F

Performance data

Ratings and specifications

Figures based on: Oil Temp = 40°C Viscosity = 32 cSt (150 SUS)	
Rated flow	350 L/min (80 USgpm)
Max relief pressure	350 bar (5000 psi)
Max load induced pressure	270 bar (4000 psi)
Cartridge material	Working parts hardened and ground steel. External surfaces electroless nickel plated.
Standard housing materials	Steel
Mounting position	Line mounted
Weight	8.2 kg (18.0 lbs)
Seal kit	SK635 (Nitrile) SK635V (Viton®)
Filtration	BS5540/4 Class 18/13 (25 micron nominal)
Temperature range	-30° to +90°C (-22° to +194°F)
Internal leakage	4 ml/min (60 dpm)
Nominal viscosity range	5 to 500 cSt

Viton is a registered trademark of E.I. DuPont.

Pressure drop

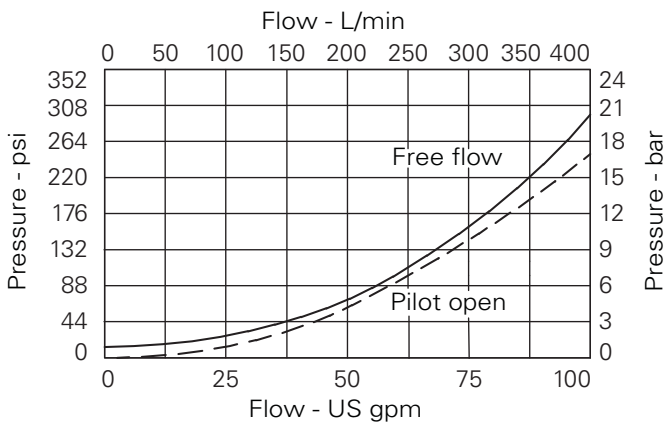

Description

Motion control and lock valves give static and dynamic control by regulating the flow into and out of hydraulic actuators. When installed close to an actuator, the valve can stop runaway in the event of hose burst. The valves also give dual thermal and overload relief protection.

A low pressure tank or charge line may be connected to the T port to provide a make-up flow to either actuator port.

The shuttle valve provides a signal from the high pressure side of the actuator to release sprung applied brakes.

Where measurements are critical request certified drawings. We reserve the right to change specifications without notice.

1CEECSH350 - Motion control & lock valve

Pilot assisted relief with brake shuttle
350 L/min (80 USgpm) • 270 bar (4000 psi)

Model code

1CEECSH350 – F 10W – 35 S 3 377

1 2 3 4 5 6 7

1 Basic code

1CEECSH350 - Cartridges and body

2 Adjustment means

F - Screw adjustment

3 Port size

Code	Port size	Housing number - body only
		Steel
10W	1 1/4" BSP valve & cyl port. 1/4" BSP brake port	DXP22047-10W-S-377

4 Pressure range

Note: Code based on pressure in bar.
35 - 70-350 bar
Std setting 210 bar

Std setting made at 4.8 L/min

5 Seals

S - Nitrile (For use with most industrial hydraulic oils.
SV - Viton (For high temperature and most special fluid applications made at 4.8 L/min

6 Pilot ratio

3 - 3:1 Standard
8 - 8:1

7 Body material

377 - Steel

Dimensions

mm (inch)

Complete valve
1 1/4" Ports
Basic Code
1CEECSH350
Internally Cross Piloted

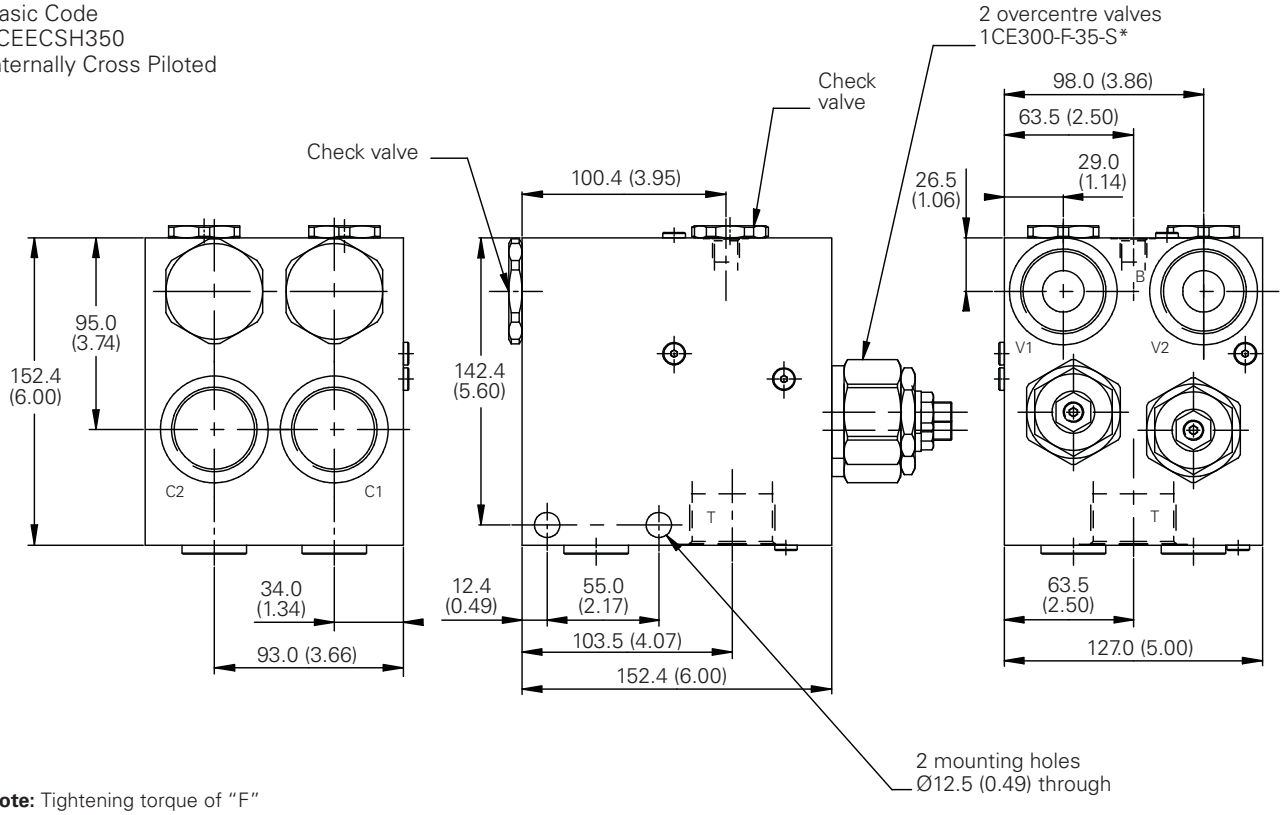

Note: Tightening torque of "F" adjuster locknut - 20 to 25 Nm.

Where measurements are critical request certified drawings. We reserve the right to change specifications without notice.

F

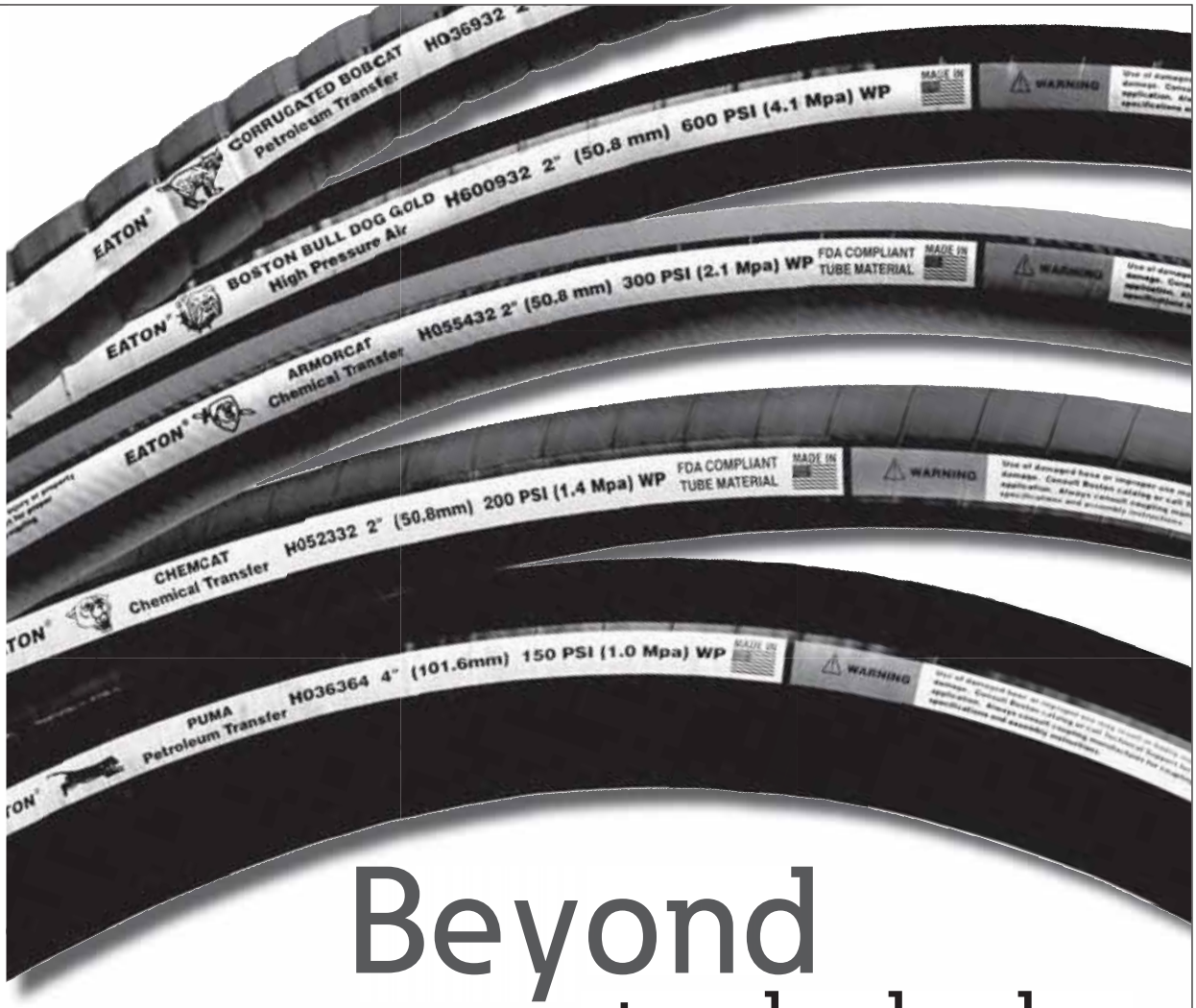

Beyond standard value

Industrial hose styles include:

- Armorcat®
- Bobcat®
- Boston® Bulldog Gold
- Chemcat®
- Concord® Steam
- Contractors Water
- Easy Couple
- Puma®
- Royalflex®
- Ultraforce®

New Bio-Diesel hose style:

- GH100 ESP™

New CARB/EPA/IMCI approved fuel products:

- EH049 ESP™ Tubing
- EH089 ESP™ Hose

Industrial Hose Solutions

Eaton has the breadth and depth of products readily available to meet specific chemical and industrial hose needs—all at a reasonable price. Eaton and our vast distribution network are focused on providing sustainable products and solutions designed to conserve resources and protect the environment. From low-pressure air and water to hazardous chemical transfer, look to Eaton's Industrial Hose Solutions.

EATON
Powering Business Worldwide

Check the Distributor Locator link at the following site for the local Eaton industrial hose distributor closest to you to get an update on "Industrial Hose Solutions"

http://www.eaton.com/hydraulics/industrialhose

An Eaton Green Solution

Where measurements are critical request certified drawings. We reserve the right to change specifications without notice.

The valves function is to prevent uncontrolled lowering of the boom in the event of hose rupture.

These valves comply with International Standard ISO8643 for hydraulic excavators and backhoe loaders incorporating servo pilot systems. The valves' function is to prevent uncontrolled towering of the boom in the event of hose rupture. Closure of the valve is activated by bringing the main control valve lever to the neutral position.
By separating the relief and pilot function into two individual cartridges, the pilot cartridge has no relieving function, hence any load on the valve does not affect its opening characteristics. Consequently, the valve will always open at the same pilot pressure/joystick position, regardless of load. This feature enables the valve to be tuned to open in harmony with the machine's own main control valve, giving better control.

The pilot cartridge is generally set to dwell 1 to 2 bar behind the main control valve, therefore the Integrated Hydraulics valve takes control in the event of hose failure.

When fitted to the arm/dipper cylinder, this dwell behind the main control valve prevents acceleration when 'arm down' is selected.

Fig. 1 and 2 show typical circuits utilizing these components.

Line mountings or SAE flange mountings are available for direct fitment to the actuator. Where line mounted models are used it is essential that steel pipes are used between the valve and the actuator.

All components are manufactured in steel and are electroplated for corrosion protection.

Typical circuit

Compact machinery

(see page F-640 to F-650)
For flows up to 30 and 40 L/min
Fig. 1

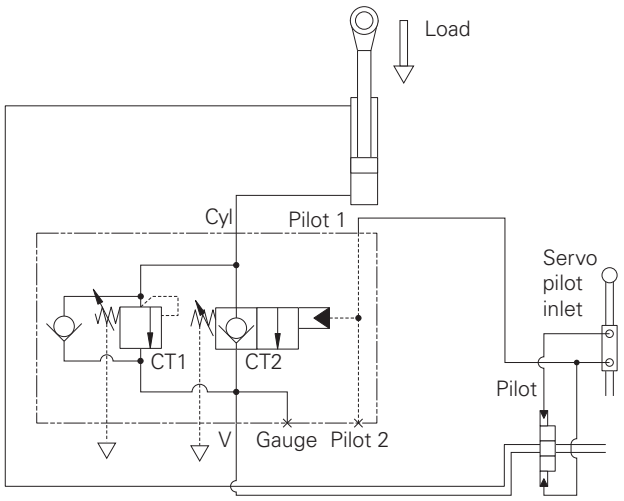

Heavy machinery

(see page F-600 to F-630)
For flows up to 250, 350 and 550 L/min
Fig. 2

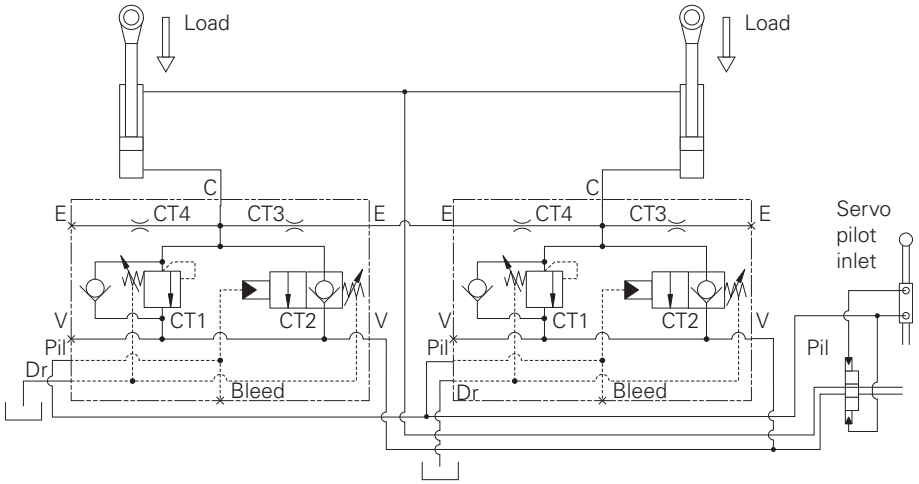

Where measurements are critical request certified drawings. We reserve the right to change specifications without notice.

1CEBL256 - BoomLoc valve

Hose burst protection, flange mounted with independent pilot control (Ref. ISO 8643)
250 L/min (66 USgpm) • 350 bar (5000 psi)

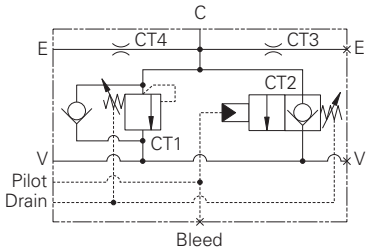

Operation

By connecting the hose rupture valve pilot in parallel with the directional spool valve pilot, and adjusting the opening characteristics of the hose rupture valve to suit that of the spool valve "BoomLoc" may be set so as not to interfere with the normal operation of the machine.

Fine adjustment of the pilot pressure permits the optimum setting to be made in differing operating systems.

Both the pilot and the relief sections are unaffected by back pressure, enabling the service line relief's to operate normally. In the event of hose failure, the control will be passed from the main spool to the "BoomLoc" valve, maintaining control of the cylinder.

Regardless of the load the pilot pressure requirement remains constant as the valve is unaffected by load induced pressure, the poppet being fully balanced with zero differential area.

Features

This is a compact design with good dirt tolerance. Hardened poppets and seats provide excellent load holding characteristics with all the advantages of the cartridge insert.

Typical circuit

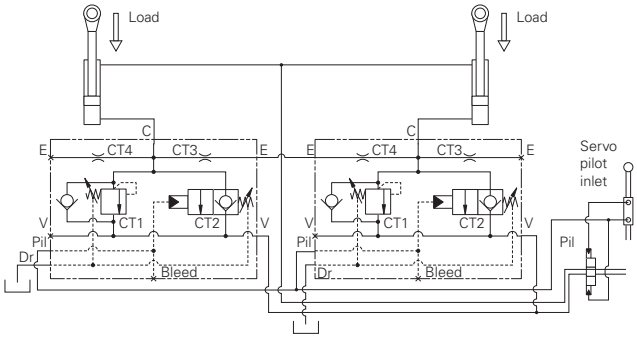

Description

These overcenter valves are suitable for use on the boom and dipper cylinders of an excavator to help the manufacturer or user comply with standard ISO8643.

They were designed to give relief, load holding and hose failure protection to systems where a pilot system controls the directional valves.

Performance data

Ratings and specifications

Figures based on: Oil Temp = 40°C Viscosity = 32 cSt (150 SUS)	
Rated flow	250 L/min (66 USgpm)
Max setting	350 bar (5000 psi)
Cartridge material	Working parts hardened and ground steel. External surfaces electroless nickel plated and passivated.
Standard housing materials	Bright drawn mild steel bar. Zinc plated and passivated.
Mounting position	Flange mounted
Weight	7.5 kg (16.5 lbs)
Seal kit	SK1162P (Polyurethane/Nitrile)
Filtration	BS5540/4 Class 18/13 (25 micron nominal)
Temperature range	-30° to +90°C (-22° to +194°F)
Internal leakage	0.6 ml/min (10 dpm)
Nominal viscosity range	5 to 500 cSt

Where measurements are critical request certified drawings. We reserve the right to change specifications without notice.

1CEBL256 - BoomLoc valve

Hose burst protection, flange mounted with independent pilot control (Ref. ISO 8643)
250 L/min (66 USgpm) • 350 bar (5000 psi)

Model code

1CEBL256 – F 3/4 6 – 35 P

1 2 3 4 5 6

1 Basic code

1CEBL256 - Cartridges and body

2 Adjustment means

F - Screw adjustment

For fixed versions add setting in 10 bar increments to end of part number. Subject to a ±10% tolerance.

3 Port size

3/4 - 3/4" SAE flange cylinder port slotted for 3000 & 6000)
3/4" SAE Flange valve port (thread G1/2)
1/8" BSP bleed port
1/4" BSP all other ports

4 SAE port type

6 - SAE 6000 (Valve port)

5 Pressure range @ 4.8 L/min

Note: Code based on pressure in bar.
35 - 70-350 bar.
Std setting 350 bar

Std setting made at 4.8 L/min

6 Seals

P - Contains polyurethane and standard seal.

Dimensions

mm (inch)

Flange mounted
Basic Code
1CEBL256

Note: Cylinder port bolt holes are slotted for fitment to both SAE 3000 & SAE 6000 mounting faces.

Note: Tightening torque of "F" adjuster locknut - 20 to 25 Nm.

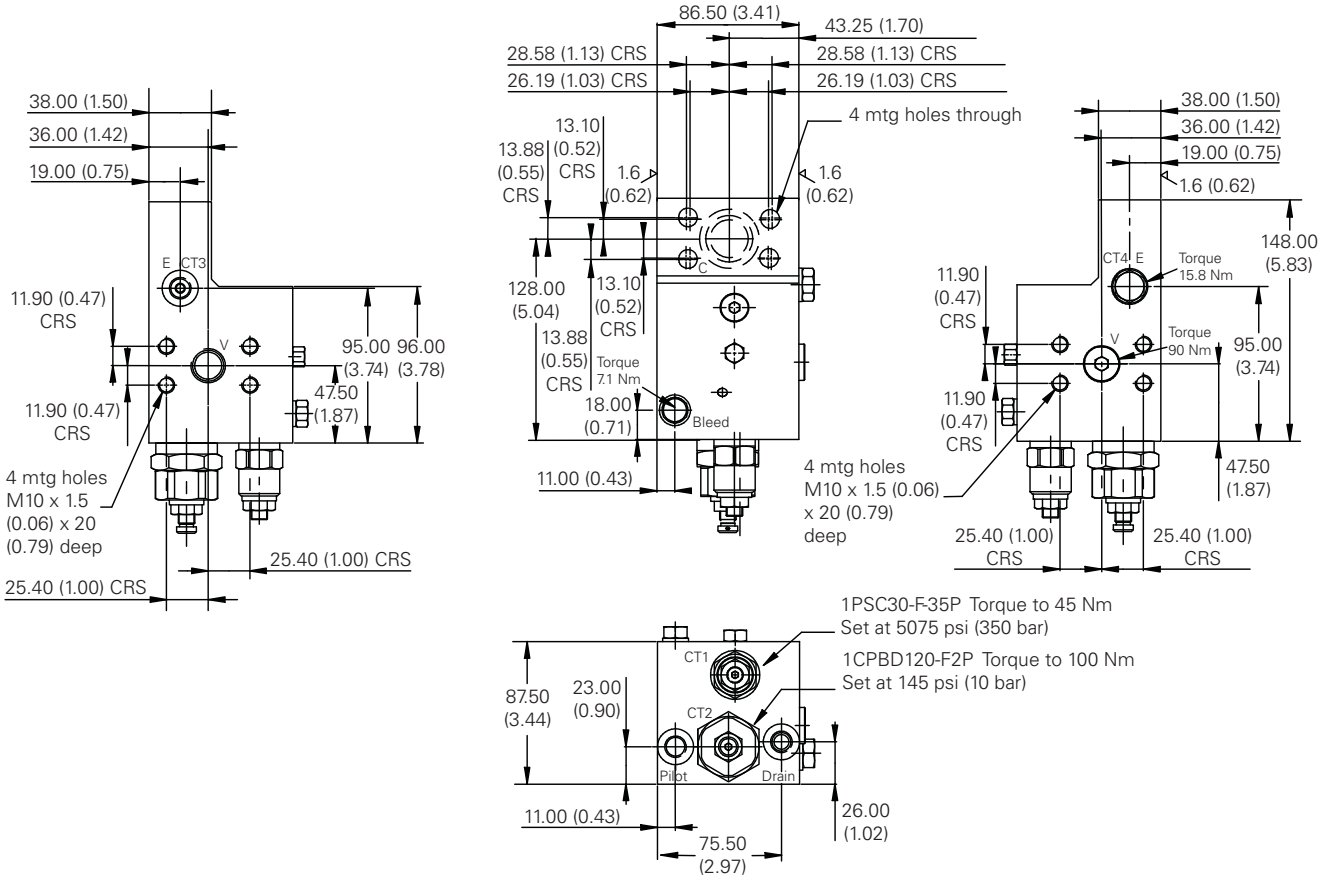

Where measurements are critical request certified drawings. We reserve the right to change specifications without notice.

F

1CEBL356 - BoomLoc valve

Hose burst protection, flange mounted with independent pilot control (Ref. ISO 8643)
350 L/min (92 USgpm) • 350 bar (5000 psi)

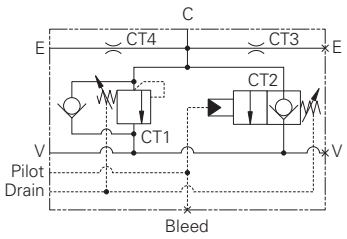

Operation

By connecting the hose rupture valve pilot in parallel with the directional spool valve pilot, and adjusting the opening characteristics of the hose rupture valve to suit that of the spool valve "BoomLoc" may be set so as not to interfere with the normal operation of the machine.

Fine adjustment of the pilot pressure permits the optimum setting to be made in differing operating systems.

Both the pilot and the relief sections are unaffected by backpressure, enabling the service line relief's to operate normally. In the event of hose failure, the control will be passed from the main spool to the "BoomLoc" valve, maintaining control of the cylinder.

Regardless of the load the pilot pressure requirement remains constant as the valve is unaffected by load induced pressure, the poppet being fully balanced with zero differential area.

Features

This is a compact design with good dirt tolerance. Hardened poppets and seats provide excellent load holding characteristics with all the advantages of the cartridge insert.

Typical circuit

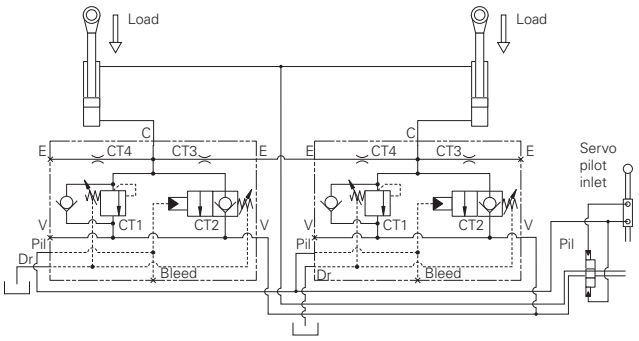

F

Description

These overcenter valves are suitable for use on the boom and dipper cylinders of an excavator to help the manufacturer or user comply with standard ISO8643.

They were designed to give relief, load holding and hose failure protection to systems where a pilot system controls the directional valves.

Performance data

Ratings and specifications

Figures based on: Oil Temp = 40°C Viscosity = 32 cSt (150 SUS)	
Rated flow	350 L/min (92 USgpm)
Max setting	350 bar (5000 psi)
Cartridge material	Working parts hardened and ground steel. External surfaces electroless nickel plated and passivated.
Standard housing materials	Bright drawn M.S. bar zinc plated and passivated
Mounting position	Flange mounted
Weight	7.5 kg (16.5 lbs)
Seal kit	SK1161P (Polyurethane/Nitrile)
Filtration	BS5540/4 Class 18/13 (25 micron nominal)
Temperature range	-30° to 90°C (-22° to +194°F)
Internal leakage	0.6 ml/min (10 dpm)
Nominal viscosity range	5 to 500 cSt

Where measurements are critical request certified drawings. We reserve the right to change specifications without notice.

1CEBL356 - BoomLoc valve

Hose burst protection, flange mounted with independent pilot control (Ref. ISO 8643)
350 L/min (92 USgpm) • 350 bar (5000 psi)

Model code

1CEBL356 – F 1 6 – 35 P

1 2 3 4 5 6

1 Basic code

1CEBL356 - Cartridges and body

2 Adjustment means

F - Screw adjustment

For fixed versions add setting in 10 bar increments to end of part number. Subject to a ±10% tolerance.

3 Port size

1 - 1" SAE Flange cylinder port (slotted for 3000 & 6000)
1" SAE Flange valve port (thread G3/4)
1/8" BSP bleed port
1/4" BSP all other ports

4 SAE port type

6 - SAE 6000 (valve port)

5 Pressure range @ 4.8 L/min

Note: Code based on pressure in bar.

35 - 70-350 bar.
Std setting 350 bar

Std setting made at 4.8 L/min

6 Seals

P - Contains polyurethane and standard seal.

Dimensions

mm (inch)

Complete valve
Flange Mounted
Basic Code
1CEBL356

Note: Cylinder port bolt holes are slotted for fitment to both SAE 3000 & SAE 6000 mounting faces.

Note: Tightening torque of "F" adjuster locknut - 20 to 25 Nm.

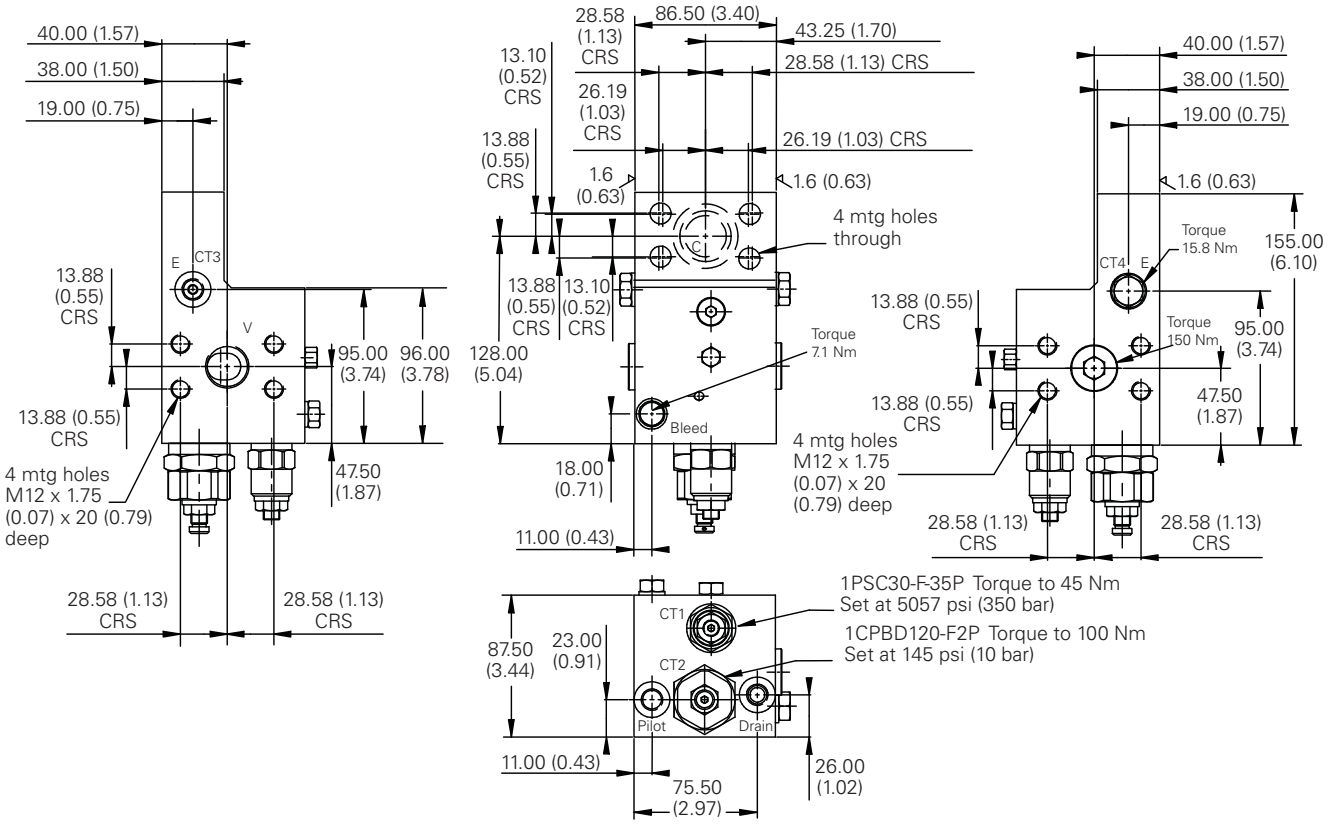

Where measurements are critical request certified drawings. We reserve the right to change specifications without notice.

F

1CEBL556 - BoomLoc valve

Hose burst protection, flange mounted with independent pilot control (Ref. ISO 8643)
550 L/min (145 USgpm) • 400 bar (5800 psi)

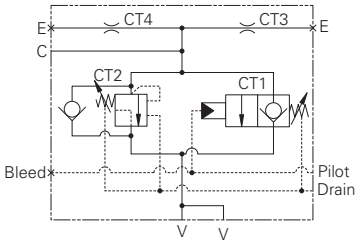

Operation

By connecting the hose rupture valve pilot in parallel with the directional spool valve pilot, and adjusting the opening characteristics of the hose rupture valve to suit that of the spool valve "BoomLoc" may be set so as not to interfere with the normal operation of the machine. Fine adjustment of the pilot pressure permits the optimum setting to be made in differing operating systems.

Both the pilot and the relief sections are unaffected by backpressure, enabling the service line relief's to operate normally. In the event of hose failure, the control will be passed from the main spool to the "BoomLoc" valve, maintaining control of the cylinder.

Regardless of the load the pilot pressure requirement remains constant as the valve is unaffected by load induced pressure, the poppet being fully balanced with zero differential area.

Features

This is a compact design with good dirt tolerance. Hardened poppets and seats provide excellent load holding characteristics with all the advantages of the cartridge insert.

Typical circuit

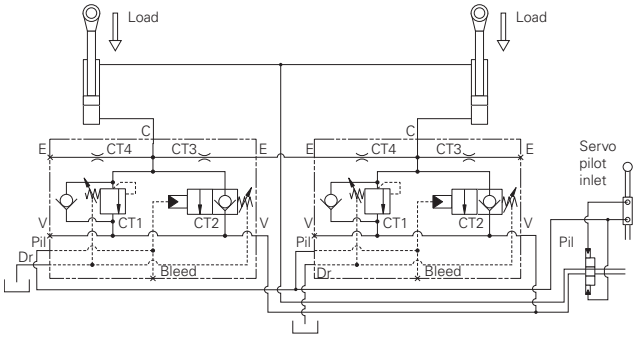

Description

These overcenter valves are suitable for use on the boom and dipper cylinders of an excavator to help the manufacturer or user comply with standard ISO8643.

They were designed to give relief, load holding and hose failure protection to systems where a pilot system controls the directional valves.

Performance data

Ratings and specifications

Figures based on: Oil Temp = 40°C Viscosity = 32 cSt (150 SUS)	
Rated flow	550 L/min (145 USgpm)
Max setting	400 bar (5800 psi)
Cartridge material	Working parts hardened and ground steel. External surfaces electroless nickel plated and passivated.
Standard housing materials	Bright drawn M.S. bar zinc plated and passivated
Mounting position	Flange mounted
Weight	21 kg (46.2 lbs)
Seal kit	SK1163P (Polyurethane/Nitrile)
Filtration	BS5540/4 Class 18/13 (25 micron nominal)
Temperature range	-30° to +90°C (-22° to +194°F)
Internal leakage	4.3 ml/min (70 dpm)
Nominal viscosity range	5 to 500 cSt

Where measurements are critical request certified drawings. We reserve the right to change specifications without notice.

1CEBL556 - BoomLoc valve

Hose burst protection, flange mounted with independent pilot control (Ref. ISO 8643)
550 L/min (145 USgpm) • 400 bar (5800 psi)

Model code

1CEBL556 – F 5/4 6 – 40 P

1 2 3 4 5 6

1 Basic code

ICEBL556 - Cartridges and body

2 Adjustment means

F - Screw adjustment

For fixed versions add setting in 10 bar increments to end of part number. Subject to a +/-10% tolerance.

3 Port size

5/4 - 1 1/4" SAE Flange cylinder port
1 1/4" SAE Flange valve port
1/4" BSP all other ports

4 SAE port type

6 - SAE 6000

5 Pressure range @ 4.8 L/min

Note: Code based on pressure in bar.
40 - 70-400 bar.
Std setting 350 bar

Std setting made at 4.8 L/min

6 Seals

P - Contains polyurethane and standard seal.

Dimensions

mm (inch)

Complete valve
Flange Mounted
Basic Code
1CEBL356

Note: Cylinder port bolt holes are slotted for fitment to both SAE 3000 & SAE 6000 mounting faces.

Note: Tightening torque of "F" adjuster locknut - 20 to 25 Nm.

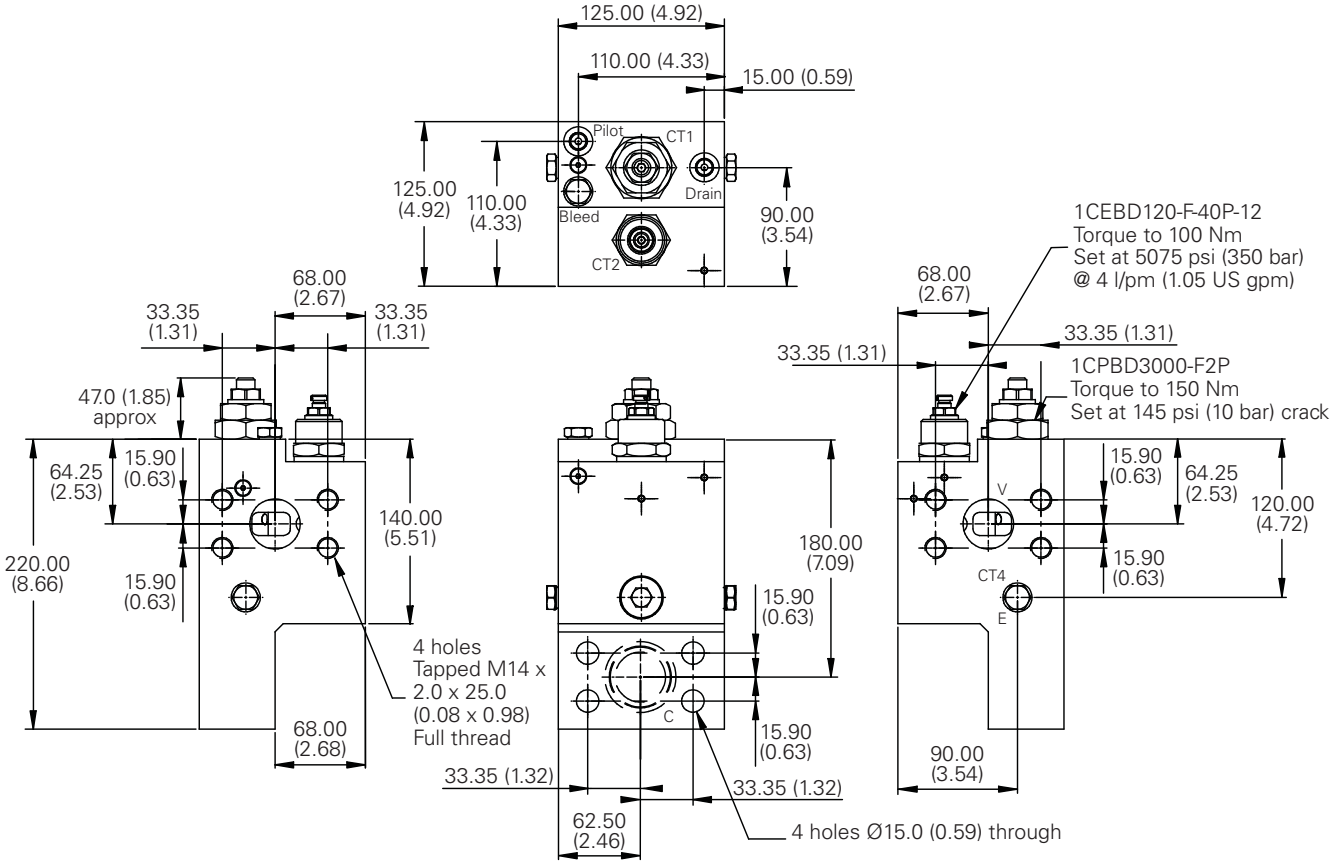

Where measurements are critical request certified drawings. We reserve the right to change specifications without notice.

F

1CEBL31 - BoomLoc valve

Hose burst protection, line mounted with independent pilot control (Ref. ISO 8643)
30 L/min (8 USgpm) • 350 bar (5000 psi)

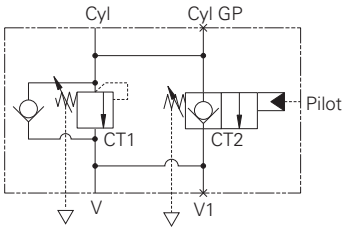

Operation

By connecting the hose rupture valve pilot in parallel with the directional spool valve pilot, and adjusting the opening characteristics of the hose rupture valve to suit that of the spool valve "BoomLoc" may be set so as not to interfere with the normal operation of the machine. Fine adjustment of the pilot pressure permits the optimum setting to be made in differing operating systems.

Both the pilot and the relief sections are unaffected by backpressure, enabling the service line relief's to operate normally. In the event of hose failure, the control will be passed from the main spool to the "BoomLoc" valve, maintaining control of the cylinder.

Regardless of the load the pilot pressure requirement remains constant as the valve is unaffected by load induced pressure, the poppet being fully balanced with zero differential area.

Features

This is a compact design with good dirt tolerance. Hardened poppets and seats provide excellent load holding characteristics with all the advantages of the cartridge insert.

Typical circuit

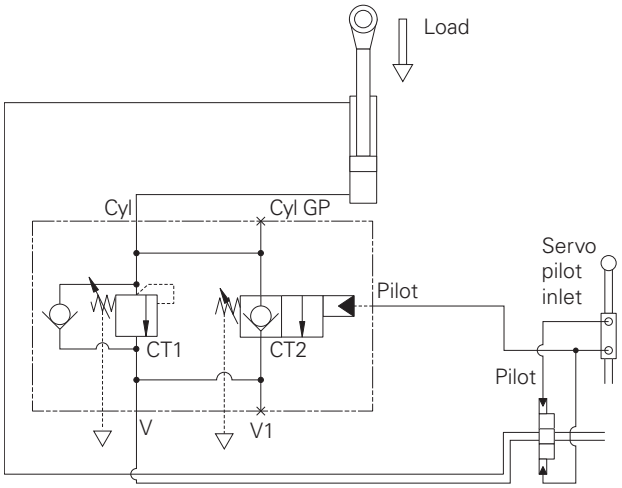

Description

These overcenter valves are suitable for use on the boom and dipper cylinders of an excavator to help the manufacturer or user comply with standard ISO8643.

They were designed to give relief, load holding and hose failure protection to systems where a pilot system controls the directional valves.

Performance data

Ratings and specifications

Figures based on: Oil Temp = 40°C Viscosity = 32 cSt (150 SUS)	
Rated flow	30 L/min (8 USgpm)
Max setting	350 bar (5000 psi)
Cartridge material	Working parts hardened and ground steel. External surfaces electroless nickel plated and passivated.
Standard housing materials	Bright drawn M.S. bar zinc plated and passivated
Mounting position	Line mounted
Weight	2 kg (4.4 lbs)
Seal kit	SK1164P (Polyurethane/Nitrile)
Filtration	BS5540/4 Class 18/13 (25 micron nominal)
Temperature range	-30° to 90°C (-22° to +194°F)
Internal leakage	0.6 ml/min (10 dpm)
Nominal viscosity range	5 to 500 cSt

Where measurements are critical request certified drawings. We reserve the right to change specifications without notice.

1CEBL31 - BoomLoc valve

Hose burst protection, line mounted with independent pilot control (Ref. ISO 8643)
30 L/min (8 USgpm) • 350 bar (5000 psi)

Model code

1CEBL31 – F 3W – 35 P

1 2 3 4 5

1 Basic code
1CEBL31 - Cartridges and body

2 Adjustment means
F - Screw adjustment

For fixed versions add setting in 10 bar increments to end of part number. Subject to a +/-10% tolerance.

3 Port size
3W - 3/8" BSP cylinder port
3/8" BSP valve port
1/4" BSP all other ports

4 Pressure range @ 4.8 L/min
Note: Code based on pressure in bar.
35 - 70-350 bar.
Std setting 240 bar

5 Seals
P - Contains polyurethane and standard seal.

Dimensions
mm (inch)

Complete valve
Line Mounted (Ref ISO 8643)
Basic Code
1CEBL31

Note: Tightening torque of "F" adjuster locknut - 20 to 25 Nm.

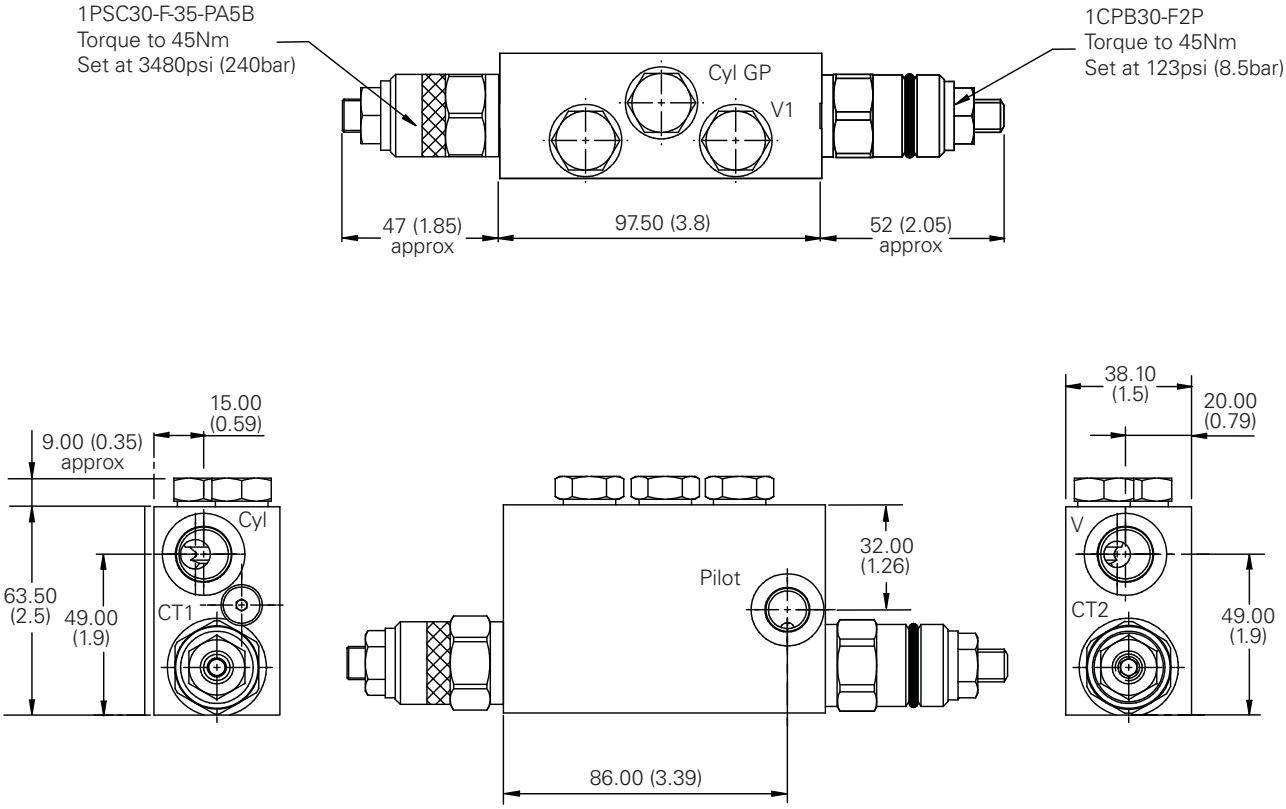

Where measurements are critical request certified drawings. We reserve the right to change specifications without notice.

F

1CEBL31 - BoomLoc valve

Hose burst protection, flange mounted with independent pilot control (Ref. ISO 8643)
30 L/min (8 USgpm) • 350 bar (5000 psi)

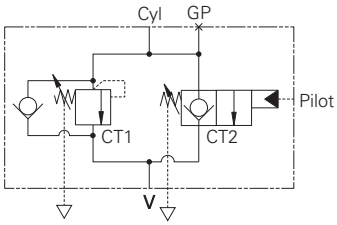

Operation

By connecting the hose rupture valve pilot in parallel with the directional spool valve pilot, and adjusting the opening characteristics of the hose rupture valve to suit that of the spool valve "BoomLoc" may be set so as not to interfere with the normal operation of the machine. Fine adjustment of the pilot pressure permits the optimum setting to be made in differing operating systems.

Both the pilot and the relief sections are unaffected by backpressure, enabling the service line relief's to operate normally. In the event of hose failure, the control will be passed from the main spool to the "BoomLoc" valve, maintaining control of the cylinder.

Regardless of the load the pilot pressure requirement remains constant as the valve is unaffected by load induced pressure, the poppet being fully balanced with zero differential area.

Features

This is a compact design with good dirt tolerance. Hardened poppets and seats provide excellent load holding characteristics with all the advantages of the cartridge insert.

Typical circuits

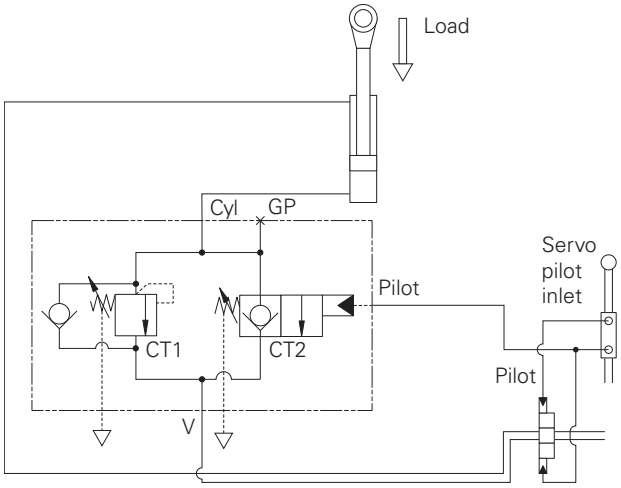

Description

These overcenter valves are suitable for use on the boom and dipper cylinders of an excavator to help the manufacturer or user comply with standard ISO8643.

They were designed to give relief, load holding and hose failure protection to systems where a pilot system controls the directional valves.

Performance data

Ratings and specifications

Figures based on: Oil Temp = 40°C Viscosity = 32 cSt (150 SUS)	
Rated flow	30 L/min (8 USgpm)
Max setting	350 bar (5000 psi)
Cartridge material	Working parts hardened and ground steel. External surfaces electroless nickel plated and passivated.
Standard housing materials	Bright drawn M.S. bar zinc plated and passivated
Mounting position	Flange mounted
Weight	2 kg (4.4 lbs)
Seal kit	SK1165P (Polyurethane/Nitrile)
Filtration	BS5540/4 Class 18/13 (25 micron nominal)
Temperature range	-30° to +90°C (-22° to +194°F)
Internal leakage	0.6 ml/min (10 dpm)
Nominal viscosity range	5 to 500 cSt

Where measurements are critical request certified drawings. We reserve the right to change specifications without notice.

1CEBL31 - BoomLoc valve

Hose burst protection, flange mounted with independent pilot control (Ref. ISO 8643)
30 L/min (8 USgpm) • 350 bar (5000 psi)

Model code

1CEBL31 – F 1/2 – 6 – 35 P

1 2 3 4 5 6

1 Basic code
1CEBL31 - Cartridges and body

2 Adjustment means
F - Screw adjustment
For fixed versions add setting in 10 bar increments to end of part number. Subject to a ±10% tolerance.

3 Port size
1/2 - 1/2" SAE flange
3/8" BSP valve port
1/4" BSP all other ports

4 SAE port type
6 - SAE 6000

5 Pressure range @ 4.8 L/min
Note: Code based on pressure in bar.
35 - 70-350 bar.
Std setting 240 bar
Std setting made at 4.8 L/min

6 Seals
P - Contains polyurethane and standard seal.

F

Dimensions

mm (inch)

Complete valve
Flange Mounted
Basic Code
1CEBL31

Note: Tightening torque of "F" adjuster locknut - 20 to 25 Nm.

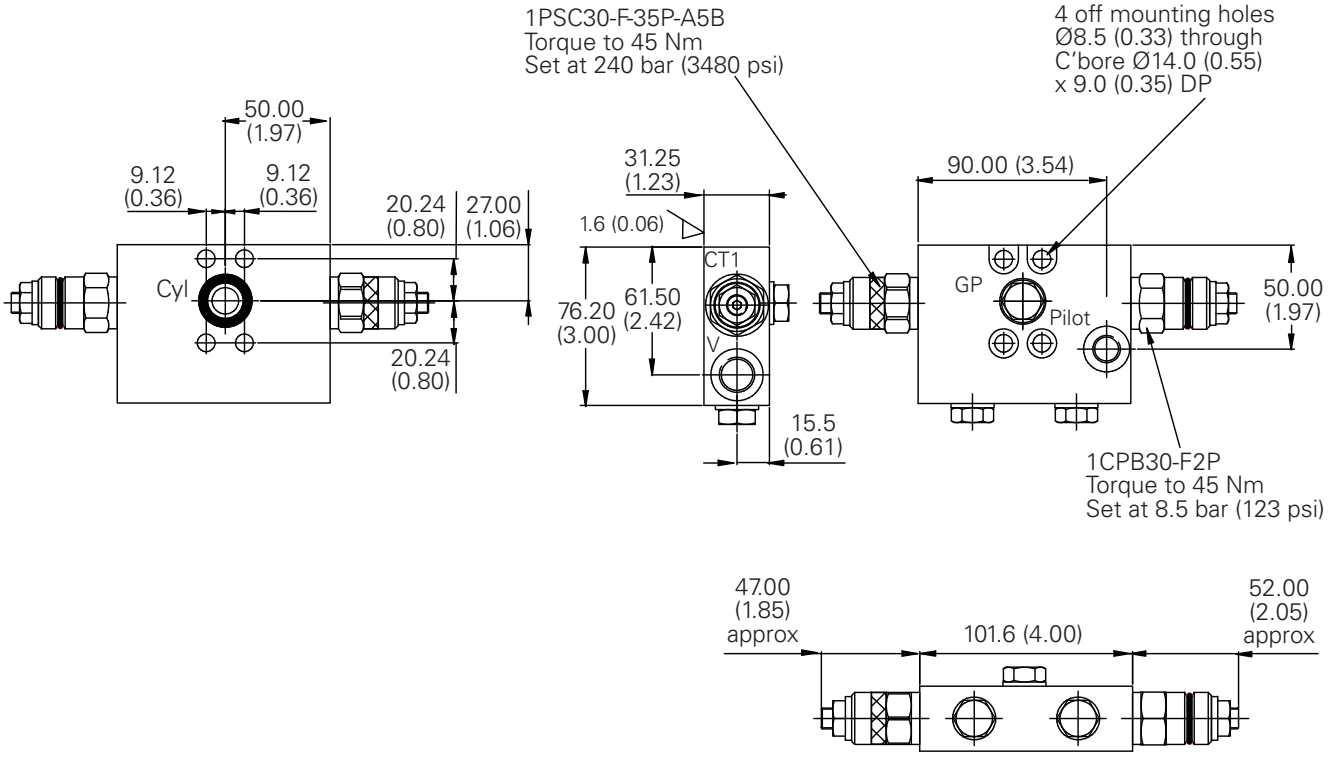

Where measurements are critical request certified drawings. We reserve the right to change specifications without notice.

1CEBL31 - BoomLoc valve

Hose burst protection, line mounted with independent pilot control (Ref. ISO 8643)
30 L/min (8 USgpm) • 350 bar (5000 psi)

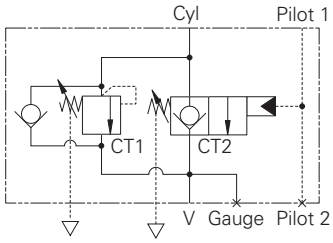

Operation

By connecting the hose rupture valve pilot in parallel with the directional spool valve pilot, and adjusting the opening characteristics of the hose rupture valve to suit that of the spool valve "BoomLoc" may be set so as not to interfere with the normal operation of the machine. Fine adjustment of the pilot pressure permits the optimum setting to be made in differing operating systems.

Both the pilot and the relief sections are unaffected by backpressure, enabling the service line relief's to operate normally. In the event of hose failure, the control will be passed from the main spool to the "BoomLoc" valve, maintaining control of the cylinder.

Regardless of the load the pilot pressure requirement remains constant as the valve is unaffected by load induced pressure, the poppet being fully balanced with zero differential area.

Features

This is a compact design with good dirt tolerance. Hardened poppets and seats provide excellent load holding characteristics with all the advantages of the cartridge insert.

Typical circuit

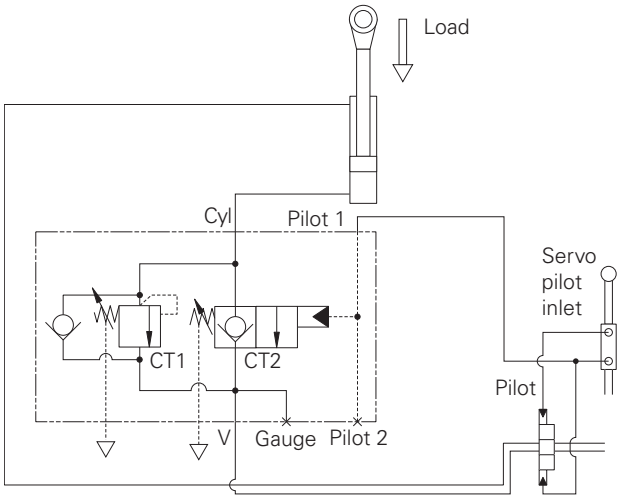

Description

These overcenter valves are suitable for use on the boom and dipper cylinders of an excavator to help the manufacturer or user comply with standard ISO8643.

They were designed to give relief, load holding and hose failure protection to systems where a pilot system controls the directional valves.

Performance data

Ratings and specifications

Figures based on: Oil Temp = 40°C Viscosity = 32 cSt (150 SUS)	
Rated flow	30 L/min (8 USgpm)
Max setting	350 bar (5000 psi)
Cartridge material	Working parts hardened and ground steel. External surfaces electroless nickel plated and passivated.
Standard housing materials	Bright drawn M.S. bar zinc plated and passivated
Mounting position	Line mounted
Weight	2 kg (4.4 lbs)
Seal kit	SK1164P (Polyurethane/Nitrile)
Filtration	BS5540/4 Class 18/13 (25 micron nominal)
Temperature range	-30° to 90°C (-22° to +194°F)
Internal leakage	0.6 ml/min (10 dpm)
Nominal viscosity range	5 to 500 cSt

Where measurements are critical request certified drawings. We reserve the right to change specifications without notice.

1CEBL31 - BoomLoc valve

Hose burst protection, line mounted with independent pilot control (Ref. ISO 8643)
30 L/min (8 USgpm) • 350 bar (5000 psi)

Model code

1CEBL31 – F 4W – 35 P

1 2 3 4 5

1 Basic code

1CEBL31 - Cartridges and body

2 Adjustment means

F - Screw adjustment

For fixed versions add setting in 10 bar increments to end of part number. Subject to a ±10% tolerance.

3 Port size

4W - 1/2" BSP cylinder port
1/2" BSP valve port
1/4" BSP all other ports

4 Pressure range @ 4.8 L/min

Note: Code based on pressure in bar.

35 - 70-350 bar.
Std setting 280 bar

Std setting made at 4.8 L/min

5 Seals

P - Contains polyurethane and standard seal.

Dimensions

mm (inch)

Complete valve
Line Mounted
Basic Code
1CEBL31

Note: Tightening torque of "F" adjuster locknut - 20 to 25 Nm.

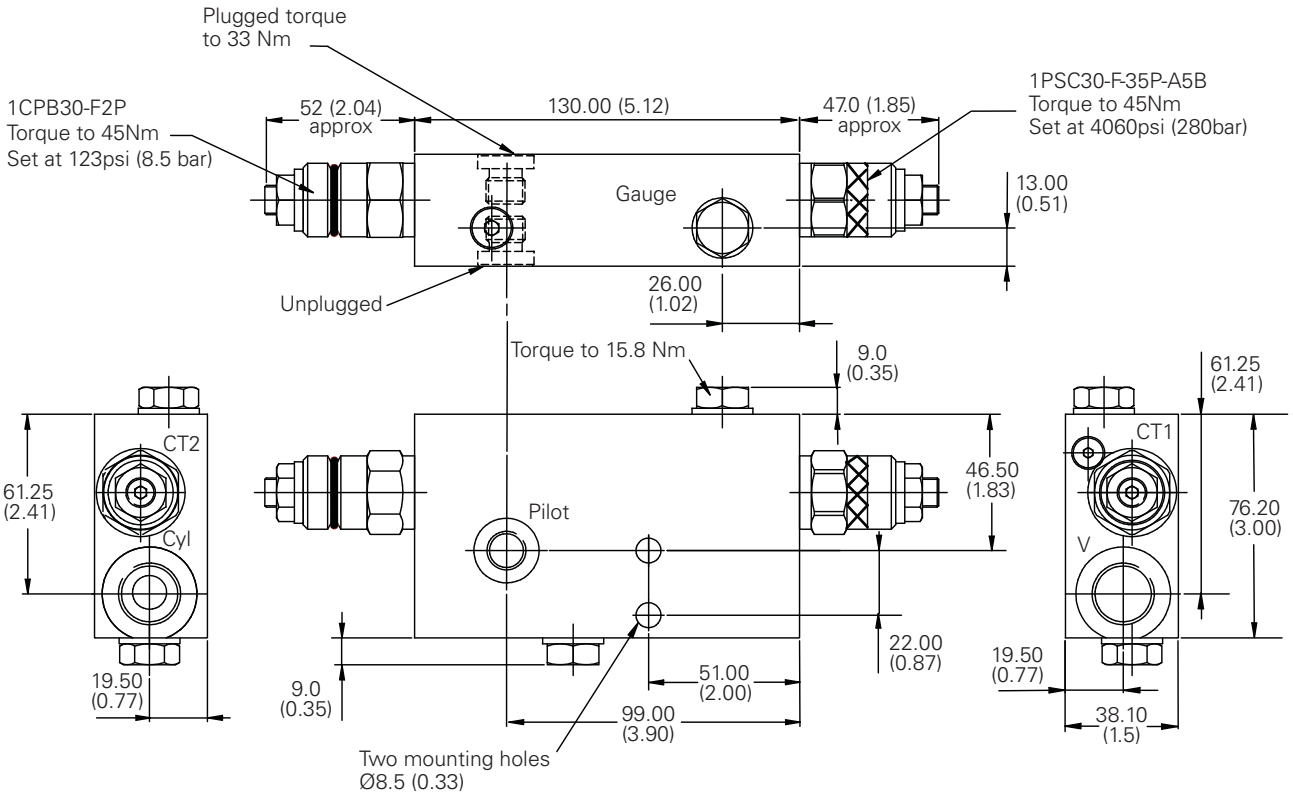

Where measurements are critical request certified drawings. We reserve the right to change specifications without notice.

F

1CEBL91 - BoomLoc valve

Hose burst protection, line mounted with independent pilot control (Ref. ISO 8643)
90 L/min (24 USgpm) • 350 bar (5000 psi)

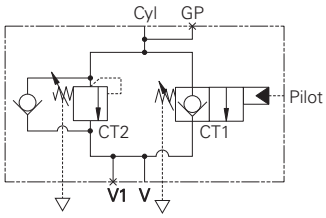

Operation

By connecting the hose rupture valve pilot in parallel with the directional spool valve pilot, and adjusting the opening characteristics of the hose rupture valve to suit that of the spool valve "BoomLoc" may be set so as not to interfere with the normal operation of the machine. Fine adjustment of the pilot pressure permits the optimum setting to be made in differing operating systems.

Both the pilot and the relief sections are unaffected by backpressure, enabling the service line relief's to operate normally. In the event of hose failure, the control will be passed from the main spool to the "BoomLoc" valve, maintaining control of the cylinder.

Regardless of the load the pilot pressure requirement remains constant as the valve is unaffected by load induced pressure, the poppet being fully balanced with zero differential area.

Features

This is a compact design with good dirt tolerance. Hardened poppets and seats provide excellent load holding characteristics with all the advantages of the cartridge insert.

Typical circuit

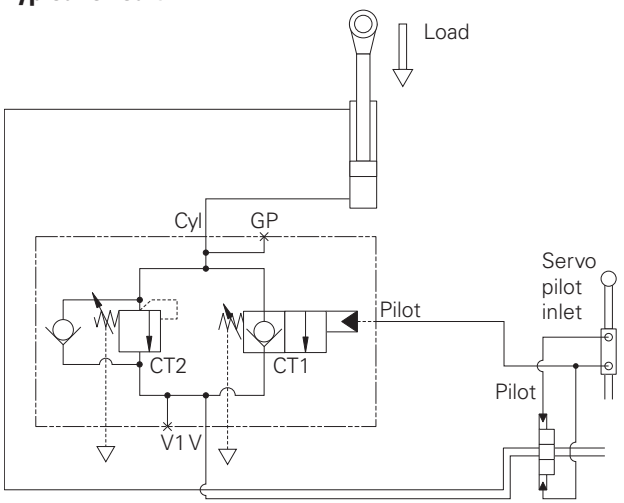

Description

These overcenter valves are suitable for use on the boom and dipper cylinders of an excavator to help the manufacturer or user comply with standard ISO8643.

They were designed to give relief, load holding and hose failure protection to systems where a pilot system controls the directional valves.

Performance data

Ratings and specifications

Figures based on: Oil Temp = 40°C Viscosity = 32 cSt (150 SUS)	
Rated flow	90 L/min (24 USgpm)
Max setting	350 bar (5000 psi)
Cartridge material	Working parts hardened and ground steel. External surfaces electroless nickel plated and passivated.
Standard housing materials	Bright drawn M.S. bar zinc plated and passivated
Mounting position	Line mounted
Weight	3.5 kg (7.7 lbs)
Seal kit	SK1166P (Polyurethane/Nitrile)
Filtration	BS5540/4 Class 18/13 (25 micron nominal)
Temperature range	-30° to 90°C (-22° to +194°F)
Internal leakage	0.6 ml/min (10 dpm)
Nominal viscosity range	5 to 500 cSt

Where measurements are critical request certified drawings. We reserve the right to change specifications without notice.

1CEBL91 - BoomLoc valve

Hose burst protection, line mounted with independent pilot control (Ref. ISO 8643)
90 L/min (24 USgpm) • 350 bar (5000 psi)

Model code

1CEBL91 – F 4W – 35 P

1 2 3 4 5

1 Basic code

1CEBL91 - Cartridges and body

2 Adjustment means

F - Screw adjustment
For fixed versions add setting in 10 bar increments to end of part number. Subject to a ±10% tolerance.

3 Port size

4W - 1/2" BSP cylinder port
1/2" BSP valve port "V"
1/4" BSP "V1" & all other ports

4 Pressure range @ 4.8 L/min

Note: Code based on pressure in bar.
35 - 70-350 bar.
Std setting 280 bar

Std setting made at 4.8 L/min

5 Seals

P - Contains polyurethane and standard seal.

Dimensions

mm (inch)

Complete valve
Line Mounted
Basic Code
1CEBL91

Note: Tightening torque of "F" adjuster locknut - 20 to 25 Nm.

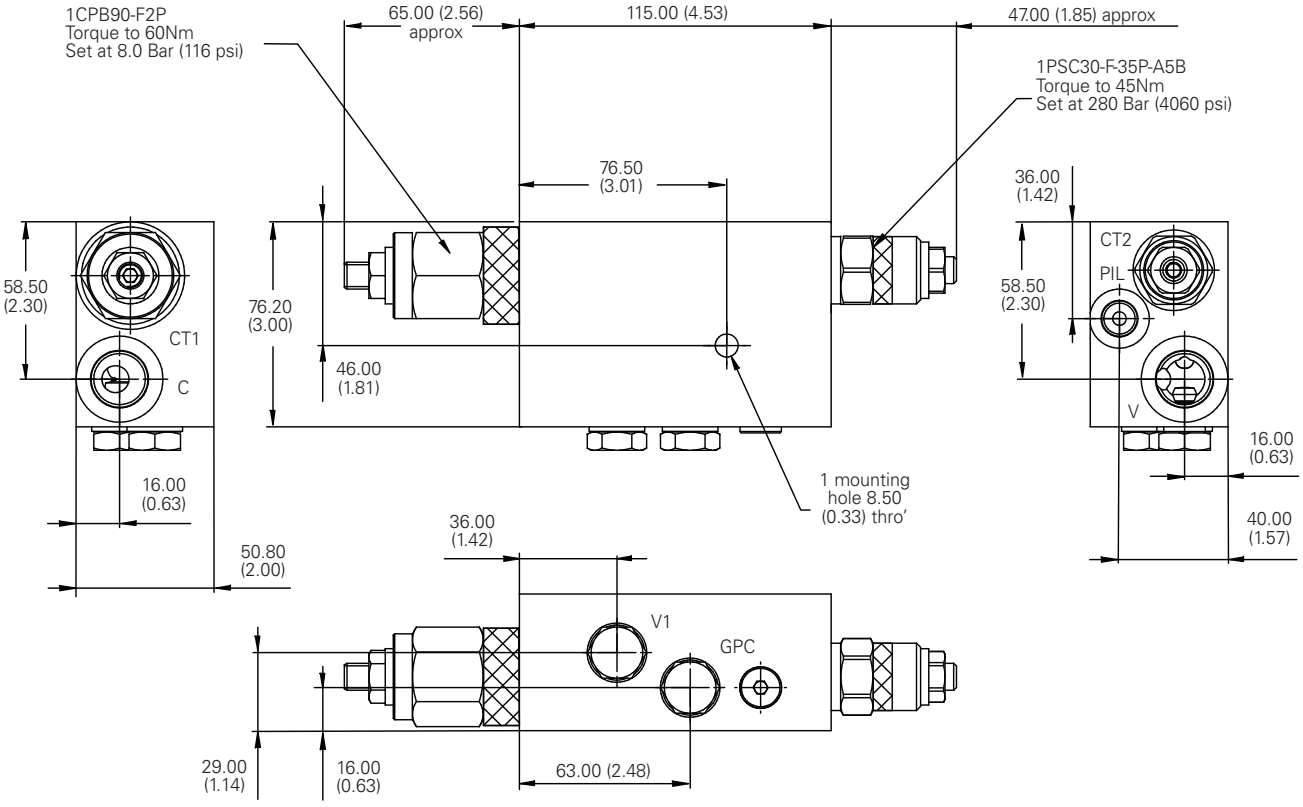

Where measurements are critical request certified drawings. We reserve the right to change specifications without notice.

F

1CEBL151 - BoomLoc valve

Hose burst protection, line mounted with independent pilot control (Ref. ISO 8643)
150 L/min (40 USgpm) • 350 bar (5000 psi)

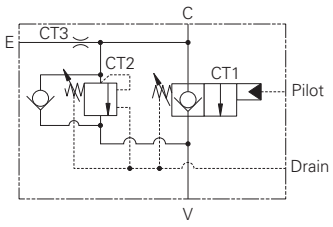

Operation

By connecting the hose rupture valve pilot in parallel with the directional spool valve pilot, and adjusting the opening characteristics of the hose rupture valve to suit that of the spool valve "BoomLoc" may be set so as not to interfere with the normal operation of the machine. Fine adjustment of the pilot pressure permits the optimum setting to be made in differing operating systems.

Both the pilot and the relief sections are unaffected by backpressure, enabling the service line relief's to operate normally. In the event of hose failure, the control will be passed from the main spool to the "BoomLoc" valve, maintaining control of the cylinder.

Regardless of the load the pilot pressure requirement remains constant as the valve is unaffected by load induced pressure, the poppet being fully balanced with zero differential area.

Features

This is a compact design with good dirt tolerance. Hardened poppets and seats provide excellent load holding characteristics with all the advantages of the cartridge insert.

Typical circuit

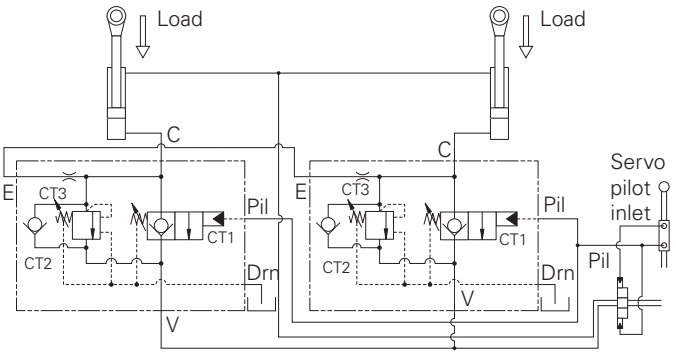

Description

These overcenter valves are suitable for use on the boom and dipper cylinders of an excavator to help the manufacturer or user comply with standard ISO8643.

They were designed to give relief, load holding and hose failure protection to systems where a pilot system controls the directional valves.

Performance data

Ratings and specifications

Figures based on: Oil Temp = 40°C Viscosity = 32 cSt (150 SUS)	
Rated flow	150 L/min (40 USgpm)
Max setting	350 bar (5000 psi)
Cartridge material	Working parts hardened and ground steel. External surfaces electroless nickel plated and passivated.
Standard housing materials	Bright drawn M.S. bar zinc plated and passivated
Mounting position	Line mounted
Weight	3 kg (6.6 lbs)
Seal kit	SK947P (Polyurethane/Nitrile)
Filtration	BS5540/4 Class 18/13 (25 micron nominal)
Temperature range	-30° to +90°C (-22° to +194°F)
Internal leakage	0.6 ml/min (10 dpm)
Nominal viscosity range	5 to 500 cSt

Where measurements are critical request certified drawings. We reserve the right to change specifications without notice.

1CEBL151 - BoomLoc Valve

Hose burst protection, line mounted with independent pilot control (Ref. ISO 8643)
150 L/min (40 USgpm) • 350 bar (5000 psi)

Model code

1CEBL151 – F 4W – 35 P

1 2 3 4 5

1 Basic code

1CEBL151 - Cartridges and body

2 Adjustment means

F - Screw adjustment
For fixed versions add setting in 10 bar increments to end of part number. Subject to a ±10% tolerance.

3 Port size

4W - 1/2" BSP cylinder port
1/2" BSP valve port
G1/8" all other ports

4 Pressure range @ 4.8 L/min

Note: Code based on pressure in bar.
35 - 70-350 bar.
Std setting 260 bar
Std setting made at 4.8 L/min

5 Seals

P - Contains polyurethane and standard seal.

Dimensions

mm (inch)

Complete valve
Line Mounted
Basic Code
1CEBL151

Note: Tightening torque of "F" adjuster locknut - 20 to 25 Nm.

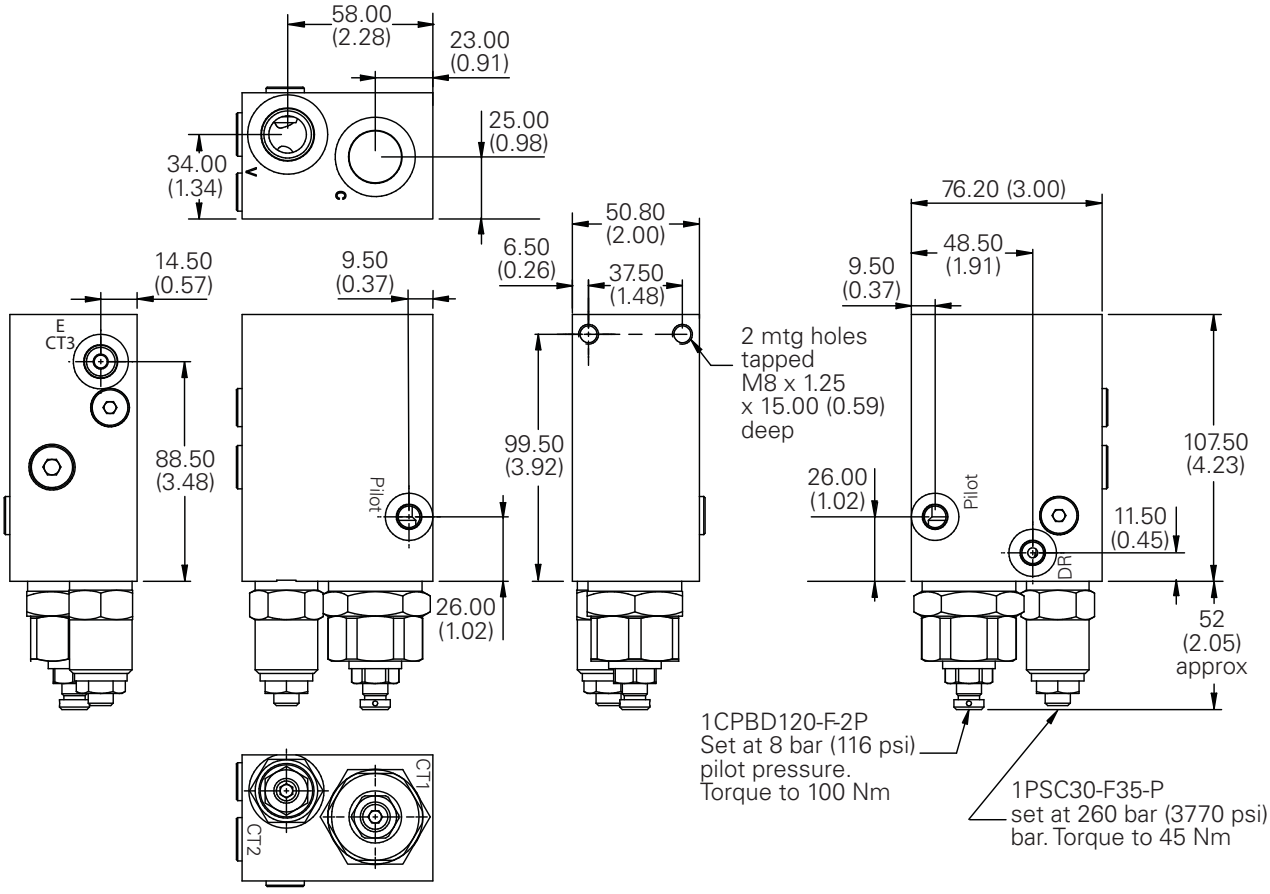

Where measurements are critical request certified drawings. We reserve the right to change specifications without notice.

F

1CEBL153 - BoomLoc valve

Hose burst protection, line mounted with independent pilot control (Ref. ISO 8643)
150 L/min (40 USgpm) • 350 bar (5000 psi)

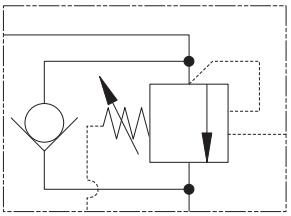

Operation

By connecting the pilot line in parallel with the spool valve pilot, the high pilot ratio allows the valve to open just prior to the spool valve, ensuring that the valve does not interfere with the normal operation of the machine. Both the pilot and the relief sections are unaffected by back pressure, enabling the service line reliefs to operate normally, without interfering with the spool valve control as it meters the return flow. In the event of hose failure, the control will be passed from the main spool to the overcenter valve, maintaining control of the cylinder.

The pressure required to open the valve and start actuator movement can be calculated as follows:

$$\text{Pilot Pressure} = \frac{\text{(Relief Setting) - (Load Pressure)}}{\text{Pilot Ratio}}$$

Features

This is a compact design with good dirt tolerance. Hardened poppets and seats provide excellent load holding characteristics with all the advantages of the cartridge insert.

Typical circuit

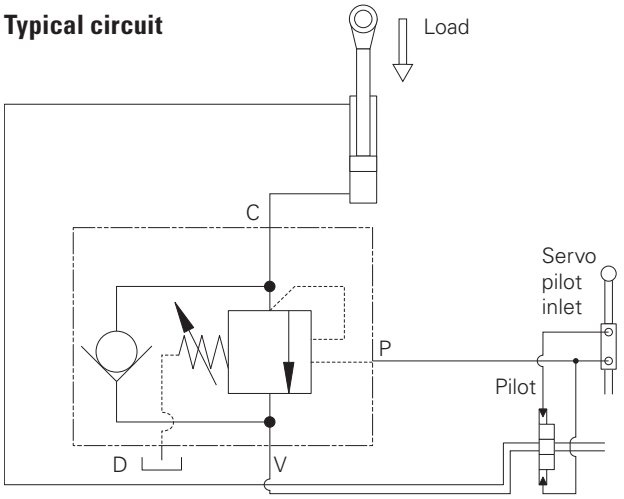

Description

These overcenter valves are suitable for use on the boom and dipper cylinders of an excavator to help the manufacturer or user comply with standard ISO8643.

They were designed to give relief, load holding and hose failure protection to systems where a pilot system controls the directional valves.

Performance data

Ratings and specifications

Figures based on: Oil Temp = 40˚C Viscosity = 32 cSt (150 SUS)	
Rated flow	150 L/min (40 USgpm)
Max setting	350 bar (5000 psi)
Cartridge material	Working parts hardened and ground steel. External surfaces electroless nickel plated and passivated.
Standard housing materials	Bright drawn M.S. bar zinc plated and passivated
Mounting position	Mount directly to cylinder using steel pipe
Weight	1.5 kg (3.3 lbs)
Seal kit	SK924P
Filtration	BS5540/4 Class 18/13 (25 micron nominal)
Temperature range	-30° to +90°C (-22° to +194°F)
Internal leakage	1.5 ml/min
Nominal viscosity range	5 to 500 cSt

Where measurements are critical request certified drawings. We reserve the right to change specifications without notice.

1CEBL153 - BoomLoc valve

Hose burst protection, line mounted with independent pilot control (Ref. ISO 8643)
150 L/min (40 USgpm) • 350 bar (5000 psi)

Model code

1CEBL153 – F 4W – 35 P

1 2 3 4 5

1 Basic code

1CEBL153 - Cartridges and body

2 Adjustment means

F - Screw adjustment
For fixed versions add setting in 10 bar increments to end of part number. Subject to a ±10% tolerance.

3 Port size

4W - 1/2" BSP cylinder port
1/2" BSP valve port
1/4" BSP pilot port/drain port

4 Pressure range @ 4.8 L/min

Note: Code based on pressure in bar.
35 - 70-350 bar.
Std setting 350 bar

Std setting made at 4.8 L/min

5 Seals

P - Contains polyurethane and standard seal.

Dimensions

mm (inch)

Complete valve
Line Mounted
Basic Code
1CEBL153

Note: Tightening torque of "F" adjuster locknut - 20 to 25 Nm.

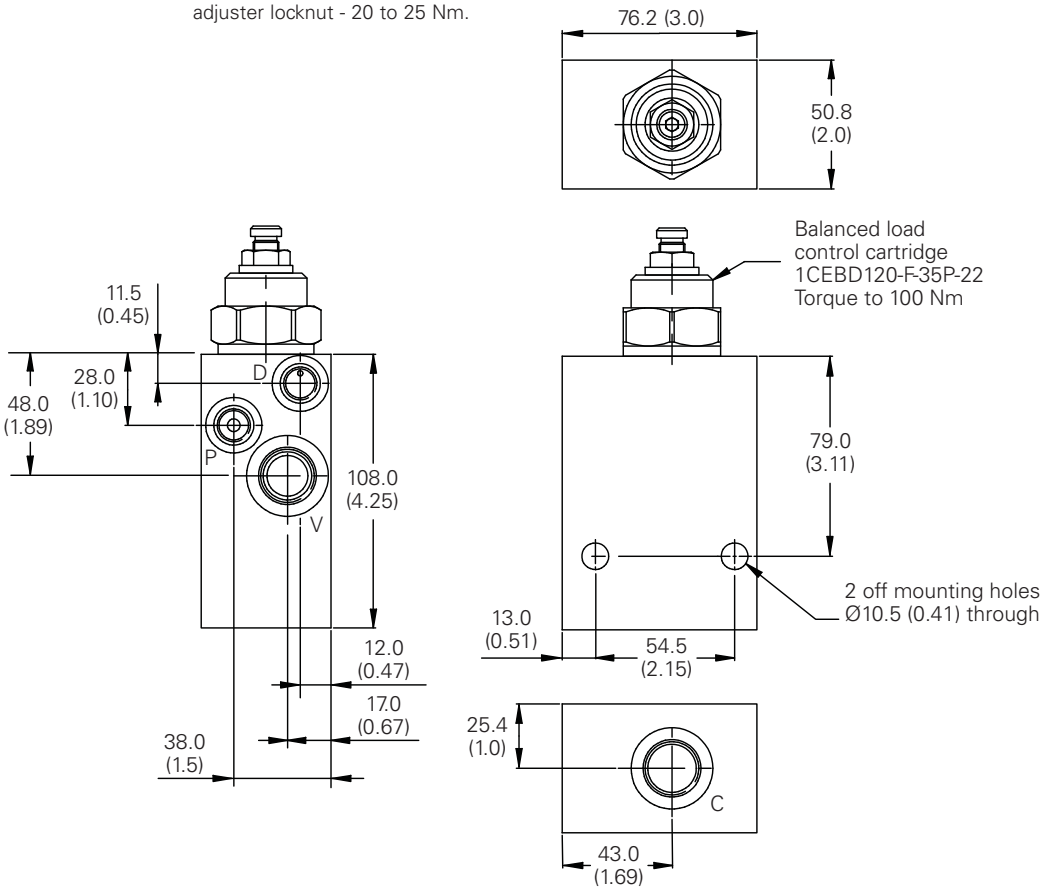

Where measurements are critical request certified drawings. We reserve the right to change specifications without notice.

Problem:
White-Knuckled About Motor Performance?

Solution:
Get Eaton's Char-Lynn® Hydraulic Motors!



EATON
Powering Business Worldwide

For power when you need it.

Warehouse and logistics applications require continuous operation. Your job depends on it. This is no place for downtime. Get Eaton's Char-Lynn® proven hydraulic motors to keep your business running.

- Top Quality
- Robust design
- Efficient performance
- Wide range of fluid capabilities
- Displacements up to 950cm³/r (58in³/r)

© 2009 Eaton Corporation

Problem:
Need More Power?

Solution:
Get Eaton's 760 Series Pumps and Motors!



EATON
Powering Business Worldwide

For power when you need it.

Mining and aggregate applications require continuous operation in demanding, power-hungry jobs. You need power and performance. Get both with Eaton's 760 Series pumps and motors.

- Robust design
- Multiple, fast-acting controls
- Wide range of fluid capabilities, including water-glycol
- 130-160cm³/r (8-10in³/r)

© 2009 Eaton Corporation

Check valves

Direct and pilot operated check valve functions for applications up to 350 bar (5000 psi) and 227 L/min (60 USgpm)

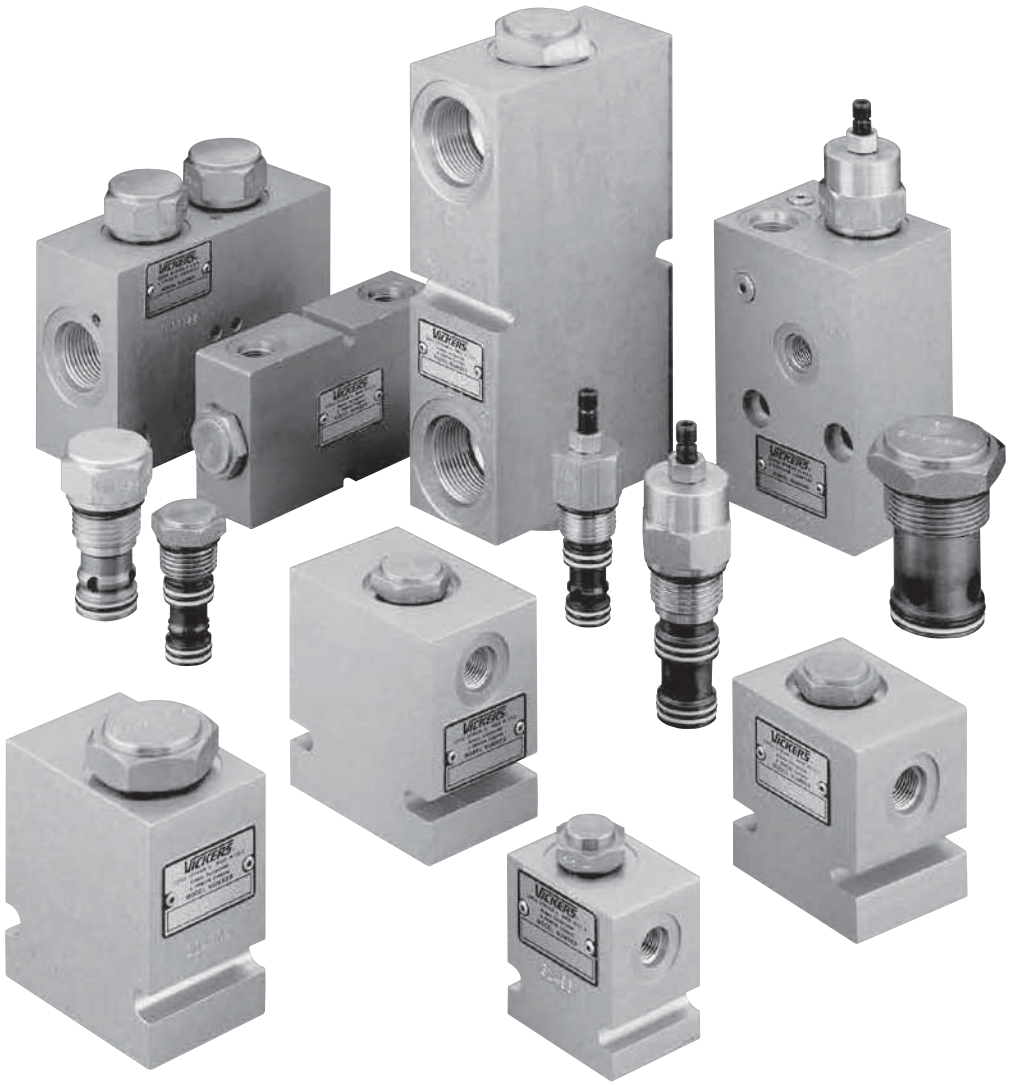

Powering Business Worldwide

Check valves

CHECK VALVES G-4
FPR - CHECK VALVE G-8
3CA20 - CHECK VALVE G-10
CV3-4 - CHECK VALVE G-12
CV3-8 - CHECK VALVE G-14
CV3-10/CV13-10 - CHECK VALVE G-16
CV16-10 - CHECK VALVE G-18
CV11-12 - CHECK VALVE G-20
CV1-16/CV11-16 - CHECK VALVE G-22
CV2-20 - CHECK VALVE G-24
3CA300 - CHECK VALVE G-26
CV6-4 - CHECK VALVE G-28
CV6-10 - CHECK VALVE G-30
RCV3-10 - CHECK VALVE G-32
CV6-16 - CHECK VALVE G-34
RCV3-10 - CHECK VALVE G-36
SPC2-8 - CHECK VALVE G-38
SPC2-10 - CHECK VALVE G-40
4CK30 - CHECK VALVE G-42
4CK90 - CHECK VALVE G-44
4CKD90 - CHECK VALVE G-46
4CK1 20 - CHECK VALVE G-48
4CK300 - CHECK VALVE G-50
4CK SERIES - CHECK VALVE G-52
4SK30 - CHECK VALVE G-54
4SK90 - CHECK VALVE G-56
4SK1 40 SERIES - CHECK VALVE G-58
DPC2-8 - CHECK VALVE G-60
4CKKT - CHECK VALVE G-62
4KD25 - CHECK VALVE G-64
5CK30 - CHECK VALVE G-66
5CK1 20 - CHECK VALVE G-68
5CK300 - CHECK VALVE G-70
1SH10 - SHUTTLE VALVE G-72
1SH60 - SHUTTLE VALVE G-74
DSV1-10 - SHUTTLE VALVE G-76
DSV2-4 - SHUTTLE VALVE G-78
DSV2-8 - SHUTTLE VALVE G-80
DSV3 ** B - SHUTTLE VALVE G-82

Check valves

Valve locator

Functional symbol

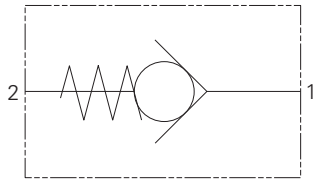

Model	Cavity	Flow rating	Typical pressure	Page
Check valve, direct		**L/min (USgpm)**	**bar (psi)**	
FPR1/4	Inline	12 (3)	350 (5000)	G-8
FPR3/8	Inline	30 (8)	350 (5000)	G-8
FPR1/2	Inline	45 (12)	350 (5000)	G-8
FPR3/4	Inline	85 (22)	300 (4300)	G-8
FPR1	Inline	140 (37)	250 (3600)	G-8
FPR11/4	Inline	220 (58)	250 (3600)	G-8
FPR11/2	Inline	310 (82)	210 (3000)	G-8
3CA20	A879	40 (10)	350 (5000)	G-10
CV3-4	C-4-2	7.6 (2)	350 (5000)	G-12
CV3-8	C-8-2	30 (8)	350 (5000)	G-14
CV3-10	C-10-2	76 (20)	210 (3000)	G-16
CV13-10	C-10-2	76 (20)	350 (5000)	G-16
CV11-12	C-12-2 (u)	114 (30)	350 (5000)	G-20
CV1-16	C-16-2	151 (40)	210 (3000)	G-22
CV11-16	C-16-2	151 (40)	350 (5000)	G-22
CV2-20	C-20-2	227 (60)	210 (3000)	G-24
3CA300	C-20-2	300 (80)	350 (5000)	G-26

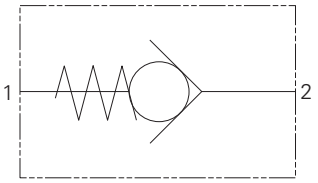

Model	Cavity	Flow rating	Typical pressure	Page
Check valve, direct		**L/min (USgpm)**	**bar (psi)**	
CV16-10	C-10-2	76 (20)	350 (5000)	G-30

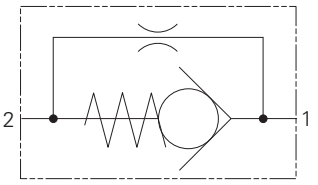

Model	Cavity	Flow rating	Typical pressure	Page
Check valve, with bypass orifice		**L/min (USgpm)**	**bar (psi)**	
CV6-4	C-4-2	7.5 (2)	350 (5000)	G-28
CV6-10	C-10-2	76 (20)	350 (5000)	G-30
CV6-16	C-16-2	151 (40)	210 (3000)	G-34

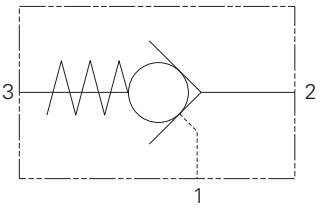

Model	Cavity	Flow rating	Typical pressure	Page
Check valve, pilot-to-open		**L/min (USgpm)**	**bar (psi)**	
SPC2-8	C-8-3	19 (5)	240 (3500)	G-38
SPC2-10	C-10-3	23 (6)	240 (3500)	G-40

Where measurements are critical request certified drawings. We reserve the right to change specifications without notice.

Functional symbol

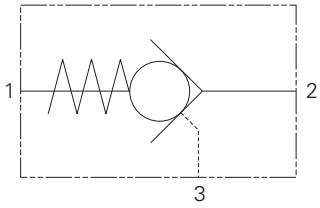

Model	Cavity	Flow rating	Typical pressure	Page
Check valve, pilot-to-open		**L/min (USgpm)**	**bar (psi)**	
4CK30	A6610	30 (8)	350 (5000)	G-42
4CK90	A12336	90 (24)	350 (5000)	G-44
4CKD90	A12336	90 (24)	420 (6000)	G-46
4CK120	A877	120 (32)	350 (5000)	G-48
4CK300	A6935	300 (80)	350 (5000)	G-50
4SK30	A20090-T11A	30 (8)	350 (5000)	G-54
4SK90	A20092-T2A	90 (24)	350 (5000)	G-56
4SK140	A20094-T17A	140 (37)	350 (5000)	G-58
4KD25	Inline	25 (6)	700 (10000)	G-64

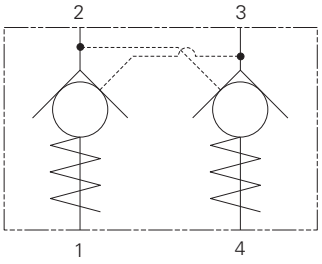

Model	Cavity	Flow rating	Typical pressure	Page
Dual pilot checks		**L/min (USgpm)**	**bar (psi)**	
DPC2-8	C-8-4	19 (5)	240 (3500)	G-60

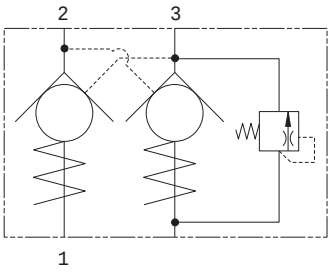

Model	Cavity	Flow rating	Typical pressure	Page
Dual pilot checks with thermal relief		**L/min (USgpm)**	**bar (psi)**	
4CKKT50	A12744	25 (6.6)	300 (4350)	G-62

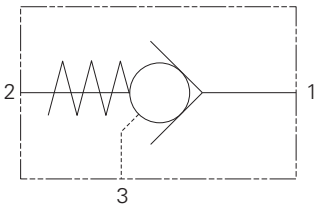

Model	Cavity	Flow rating	Typical pressure	Page
Check valve, pilot-to-close		**L/min (USgpm)**	**bar (psi)**	
5CK30	A6610	30 (8)	350 (5000)	G-66
5CK120	A877	120 (32)	350 (5000)	G-68
5CK300	A6935	250 (65)	350 (5000)	G-70

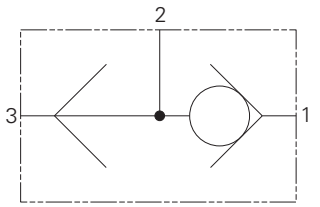

Model	Cavity	Flow rating	Typical pressure	Page
Shuttle		**L/min (USgpm)**	**bar (psi)**	
1SH10	A16927	20 (5)	350 (5000)	G-72
1SH60	C-I-M18-3	50 (13)	350 (5000)	G-74
DSV1-10	C-10-3	23 (6)	210 (3000)	G-76
DSV2-4	C-4-3	3 (.75)	240 (3500)	G-78
DSV2-8	C-8-3	23 (6)	240 (3500)	G-80
DSV3-XX-B	Inline	170 (45)	350 (5000)	G-82

Where measurements are critical request certified drawings. We reserve the right to change specifications without notice.

Check valves

Section overview

This section gives basic specifications for the full line of Eaton screw-in cartridge check valves. Its purpose is to provide a quick, convenient reference tool when choosing Vickers cartridge valves or designing a system using these components.

Eaton's Integrated Hydraulics range of direct and pilot operated check valves provides the hydraulic circuit designer with a wide selection of cartridge and in-line products.

Two pressure ratings are shown for all products featured in this catalog. The typical application pressure rating is the maximum recommended operating pressure for the valve in a given system. The fatigue pressure rating is the pressure for the valve to be free for infinite life from metal fatigue.

All poppet type check valve cartridges have hardened and ground poppets and sharp-edged ground steel seats. This provides an excellent product that is dirt-tolerant, has reliable seating, and is suitable for fast cycling with long life.

Direct operated check valves

Cartridges fit into industry standard cavities and may be supplied for installation in manifolds, or be provided in standard housings having SAE or BSPP ports suitable for in-line mounting.

A wide selection of cracking pressures is available from 0,21 to 20,7 bar (3 to 300 psi). Thus the opportunity exists to use the valves not only as conventional check but also as low pressure relief valves.

Pilot operated check valves

These valves are used for:

- Position load locking
- As an alternative to

counterbalance valves where neither the overrunning loads or release speed are factors in the application.

The high pressure 4CK** series pilot-to-open check valves complement the 1CE series counterbalance cartridges and are physically interchangeable with them.

The 4CK**s provide a low cost Alternative to load control when the dynamics of neither overrunning loads nor load release speed are factors to be considered in the design of the hydraulic circuit for the load to be controlled.

The pilot-to-open valves positively lock a load from port 1 to port 2 until pilot pressure applied to port 3 is sufficient to unseat the valve. This then permits flow from port 1 to port 2.

The 4CK** covers flow up to 300 L/min (80USgpm). These POC valves are suitable for use in a broad range of load control applications with typical system operating pressures up to 350 bar (5000 psi).

Features and benefits

- Products in this catalog have been fatigue tested for one million cycles at 132% of rated pressure.
- Simple load holding device. Low cost alternative to more complex solutions when overrunning loads are not present and / or control of load release speed is not required.
- Provides high operational efficiency and low spring settings.
- Valves are offered with a wide variety of standard housings with SAE and BSPP port options in the following configurations:
  - In-line single
  - In-line dual
  - SAE, 4-bolt, code 61
  - Close coupled, nipple mounted
  - Gasket mounted single
  - Gasket mounted dual

The Eaton range of direct and pilot operated check valves provides the hydraulic circuit designer with a wide selection of cartridge and in-line products.

- Unique design provides compact package and low pressure drops that match or exceed current market expectations and provide for excellent repeatability and stability.
- 3:1 pilot ratio satisfies simple load holding application requirements, while providing smooth operation and longer operating life.

Single pilot check

Also offered are SPC2-8 and SPC2-10 single pilot check valves with pressures to 240 bar (3500 psi) and flows to 23 L/min (6 USgpm). These valves operate similar to the 4CK** Series product but offer an opposite flow path which offers the designer a choice of pilot operated check valve when laying out a custom manifold for ease of design and fit the C10-2 cavity.

Supporting products

Integrated Hydraulics screw in cartridge valves are available in a wide range of mounting configurations and porting options to provide flexibility in developing circuits. Housings are available in either aluminum 210 bar (3000 psi) or steel 350 bar (5000 psi) configurations. All are available with a choice of BSPP (ISO–0228/1) or SAE style ports.

G

Where measurements are critical request certified drawings. We reserve the right to change specifications without notice.





EATON
Powering Business Worldwide

Industry leading vane, piston, gear and geroter pumps and motors from Vickers®, Eaton®, Char-Lynn® and Hydrokraft® offer you hydraulic power components that are built tough for demanding industrial applications – because uptime is critical in your busy world.

For more information,
visit http://www.eaton.com/hydraulics/ait

Where measurements are critical request certified drawings. We reserve the right to change specifications without notice.

FPR - Check valve

Guided poppet line mounted
Up to 310 L/min (82 USgpm) • 350 bar (5000 psi)

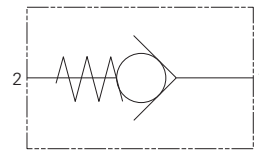

Operation

These are in line check valves. Free flow is allowed from port 1 to port 2 when the inlet pressure rises higher than the crack pressure.

Flow is prevented between port 2 and port 1 by the poppet resting on the seat within the body.

Features

All steel construction with hardened and precision ground poppet gives excellent flow capability and shut-off characteristics with good tolerance to particle (dirt) contaminated fluid.

Sectional view

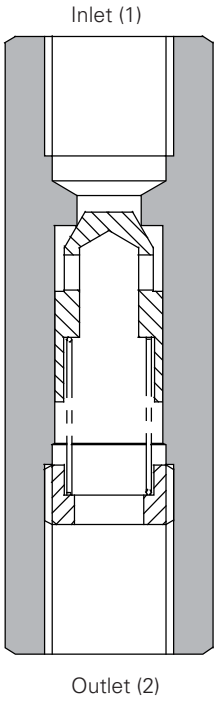

Description

A range of line mounted valves for convenient installation into hydraulic circuits. Valves allow flow at a low pressure drop (from 0.5 bar, 7 psi) in the free flow direction and prevent flow in the reverse direction. The range extends from 1/4" BSP to 1 1/2" BSP (12 liters/min 3 US GPM to 310 min/min, 82 US GPM) nominal flow with cracking pressures from 0.5 to 5 bar (7 to 72.5 psi).

Performance data

Ratings and specifications

Figures based on: Oil Temp = 40° C Viscosity = 32 cSt (150 SUS)				
Rated flow				310 L/min (82 USgpm)
Valve material				Working parts hardened and ground steel. External surfaces zinc plated.
Mounting position				Line mounted
Weight	FPR 1/4" FPR 3/8" FPR 1/2" FPR 3/4"	0.11 kg (0.24 lbs) 0.19 kg (0.42 lbs) 0.25 kg (0.55 lbs) 0.50 kg (1.10 lbs)	FPR 1" FPR 1 1/4" FPR 1 1/2"	0.89 kg (1.95 lbs) 1.75 kg (3.85 lbs) 2.10 kg (4.63 lbs)
Recommended filtration level				BS5540/4 Class 18/13 (25 micron nominal)
Operating temp				-30°C to +90°C (-22°C to +194°F)
Nominal viscosity range				5 to 500 cSt

Pressure drop

FPR 1/4"

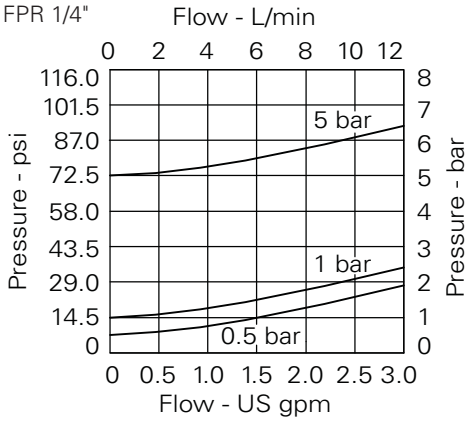

FPR 3/8"

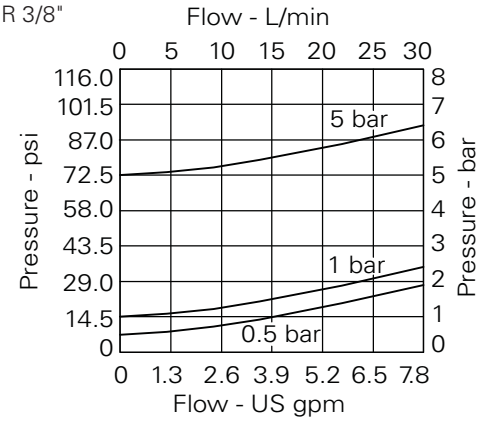

FPR 1/2"

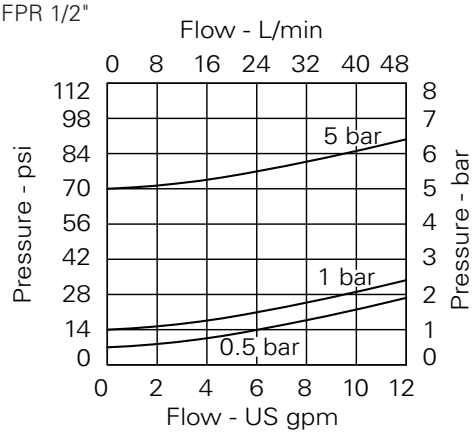

FPR 3/4"

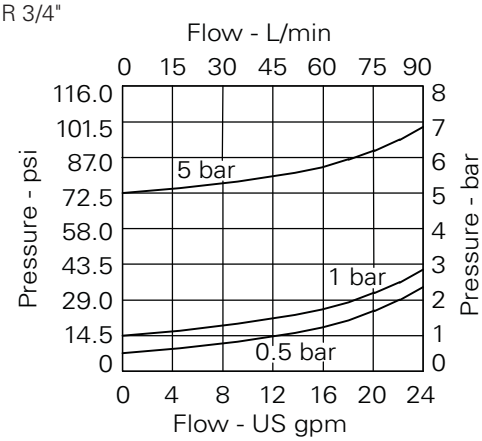

Where measurements are critical request certified drawings. We reserve the right to change specifications without notice.

Model code

FPR ** – 0.5

1 2

1 Basic code

FPR1/4 - Inline valve
FPR3/8 - Inline valve
FPR1/2 - Inline valve
FPR3/4 - Inline valve
FPR1 - Inline valve
FPR11/4 - Inline valve
FPR11/2 - Inline valve

2 Cracking pressure

0.5 - 0.5 bar (standard)
1.0 - 1.0 bar (FPR1/4, 3/8, 1/2, 3/4 Only)
2.5 - 2.5 bar
5.0 - 5.0 bar
10.0 - 10.0 bar

Pressure drop

FPR 1"

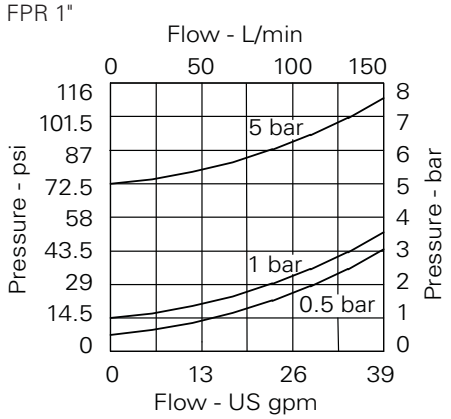

FPR 1 1/4"

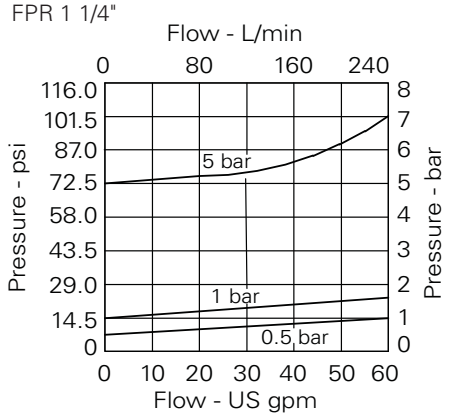

FPR 1 1/2"

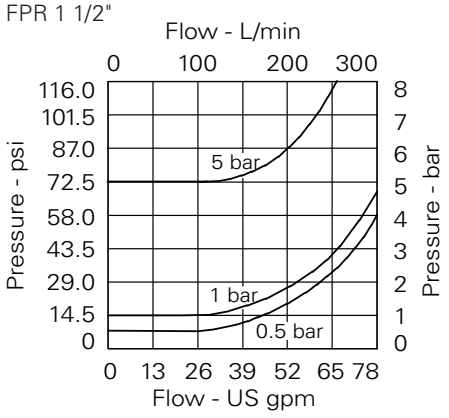

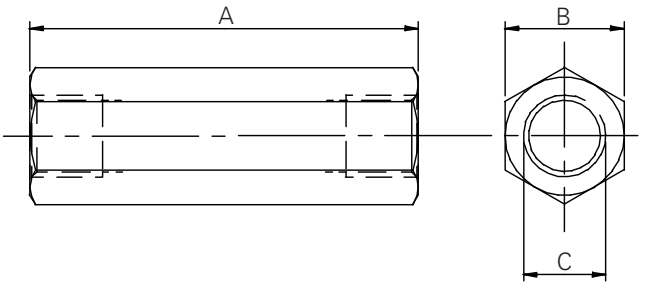

Basic code	Flow rate	Pressure	A	B	C
FPR 1/4	12 L/min (3 USgpm)	350 bar (5000 psi)	62	19	1/4" BSP
FPR 3/8	30 L/min (8 USgpm)	350 bar (5000 psi)	68	24	3/8" BSP
FPR 1/2	45 L/min (12 USgpm)	350 bar (5000 psi)	78	27	1/2" BSP
FPR 3/4	85 L/min (22 USgpm)	300 bar (4300 psi)	88	36	3/4" BSP
FPR 1	140 L/min (37 USgpm)	250 bar (3600 psi)	112	46	1" BSP
FPR 1 1/4	220 L/min (58 USgpm)	250 bar (3600 psi)	142	55	1 1/4" BSP
FPR 1 1/2	310 L/min (82 USgpm)	210 bar (3000 psi)	155	60	1 1/2" BSP

Where measurements are critical request certified drawings. We reserve the right to change specifications without notice.

3CA20 - Check valve

Direct acting, ball type
40 L/min (10 USgpm) • 350 bar (5000 psi)

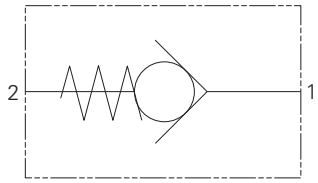

Operation

The valve remains closed until the spring bias is reached at port 1 at which time the poppet lifts of the seat and allows flow from port 1 to port 2. in the other direction the valve is closed.

Features

Cartridge design with machined seats and precision ground balls gives excellent flow reseat characteristics. Installation into the 2-port 7/8" UNF cavity gives easy fitment and serviceability.

Sectional view

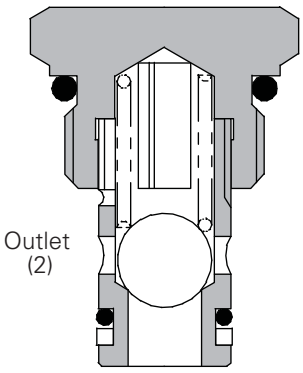

Description

These cartridge check valves allow flow at a low pressure drop, with cracking pressure from 0.5 to 7 bar (7 to 100 psi) in the free flow direction and close to prevent flow in the reverse direction.

They fit into simply machined cavities and are therefore ideal for installation into custom designed Hydraulic Integrated Circuits, manifold blocks and other hydraulic equipment.

Performance data

Ratings and specifications

Figures based on oil temperature of 40° C and viscosity of 32 cSt (150 SUS)	
Rated flow	40 L/min (10 USgpm
Maximum pressure	350 bar (5000 psi)
Cracking pressures	0.5 bar (7 psi) 1.5 bar (22 psi) 3.5 bar (50 psi) 7.0 bar (100 psi)
Cartridge material	All steel construction. External parts electroless zinc plated.
Standard housing material	Standard aluminum (up to 210 bar). Add suffix "377" for steel option.
Mounting position	Unrestricted
Cavity number	A879 (See Section M)
Torque cartridge into cavity	45 Nm (33 lbs. ft.)
Weight	0.05 kg (0.11 lbs.)
Seal kit number	SK396 (Nitrile), SK396V (Viton®)
Recommended filtration level	BS5540/4 Class 18/3 (25 micron nominal)
Operating temperature	-30°C to +90°C (-22°C to +194°F)
Leakage	0.2 ml/min nominal
Nominal viscosity range	5 to 500 cSt

Viton is a registered trademark of E. I. DuPont

Pressure drop curves

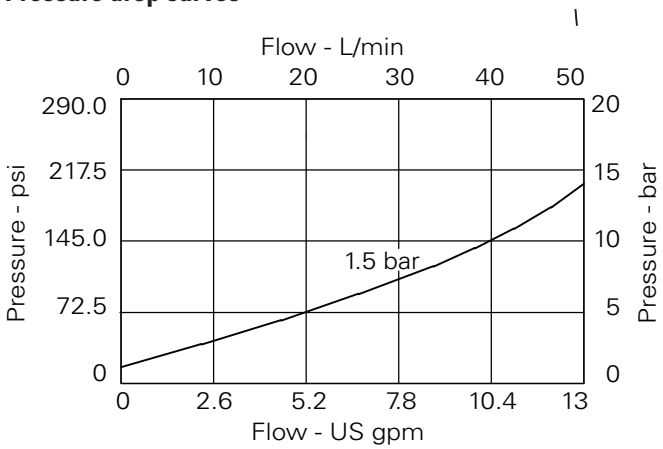

Where measurements are critical request certified drawings. We reserve the right to change specifications without notice.

3CA20 - Check valve

Direct acting, ball type
40 L/min (10 USgpm) • 350 bar (5000 psi)

Model code

3CA – 3W – 1.5 S**

1 2 3 4

1 Basic code

3CA20 - Cartridge only
3CA25 - Cartridge and body

2 Port size

Code	Port size	Housing number - body only	
		Aluminium	Steel
2W	1/4" BSP	A1485	
3W	3/8" BSP	A1043	A14175
6T	3/8" SAE	A15676	A14843

3 Cracking pressure

0.5 - 0.5 bar (7 psi)
1.5 - 1.5 bar (22 psi)
3.5 - 3.5 bar (50 psi)
7.0 - 7.0 bar (100 psi)

4 Seals

S - Nitrile (For use with most industrial hydraulic oils)
SV - Viton (for high temperature and most special fluid applications)

Dimensions

mm (inch)

Cartridge only

Basic code
3CA20

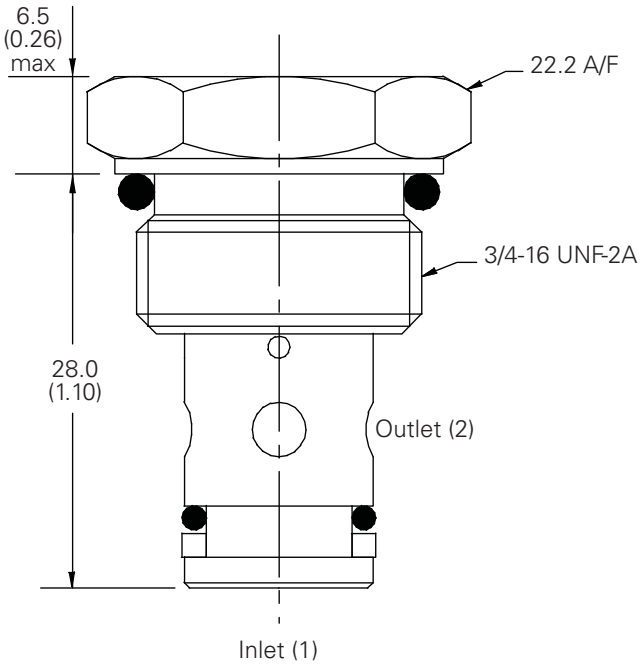

Single valve

1/4", 3/8" Ports
Basic code
3CA25

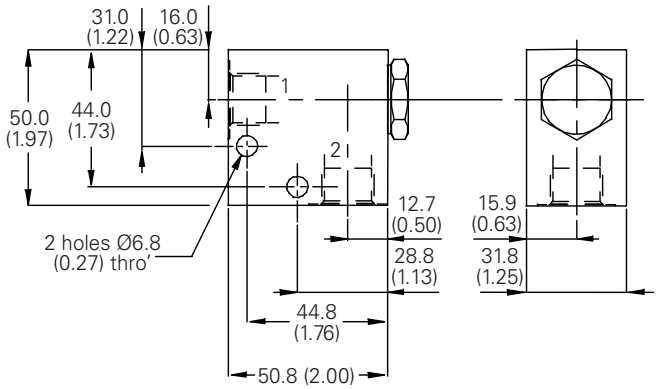

Note: For applications above 210 please consult our technical department or use the steel body option.

G

Where measurements are critical request certified drawings. We reserve the right to change specifications without notice.

CV3-4 - Check valve

Direct acting, poppet type
7.6 L/min (2 USgpm) • 350 bar (5000 psi)

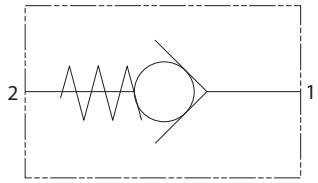

Operation

The valve remains closed until the spring bias is reached at port 1 at which time the poppet lifts of the seat and allows flow from port 1 to port 2. in the other direction the valve is closed.

Features

Compact screw in cartridge design. Hardened and ground working parts to limit leakage and extend service life.

Sectional view

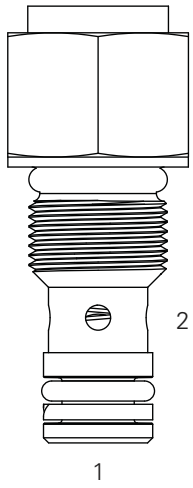

Descriptions

This is a compact Poppet Type check valve ideal for use in manifolds for load sense or low flow applications.

Performance data

Ratings and specifications

Performance data is typical with fluid at 21,8 cST (105 SUS) and 49°C (120°F)	
Typical application pressure (all ports)	350 bar (5000 psi)
Cartridge fatigue pressure (infinite life)	350 bar (5000 psi)
Rated flow	7.6 L/min (2 USgpm)
Free flow cracking pressure @ 1 L/min (0.25 USgpm)	5-0.34 bar (5 psi) 60 - 4.1 bar (60 psi)
Internal leakage, port 2 to 1	5 drops/min maximum @ 210 bar (3000 psi)
Temperature range	–40° to 120°C (–40° to 248° F)
Cavity	C-4-2
Fluids	All general purpose hydraulic fluids such as MIL -H-5606, SAE 10, SAE 20, etc.
Filtration	Cleanliness code 18/**16/13**
Weight: cartridge only	0.04 kg (0.09 lbs.)
Seal kit	9900174-000 (Buna-N) 9900175-000 (Viton®)

Viton is a registered trademark of E. I. DuPont

Pressure drop

CV3-4-P-000-05

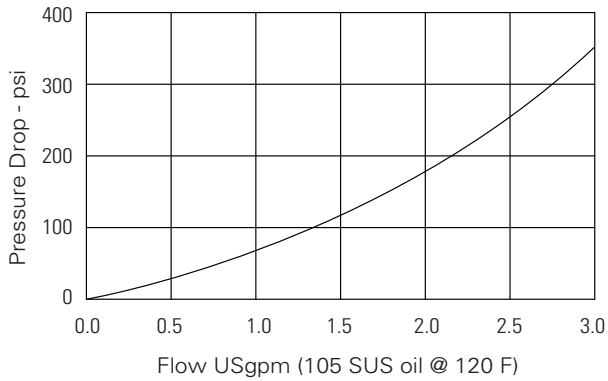

CV3-4-P-000-60

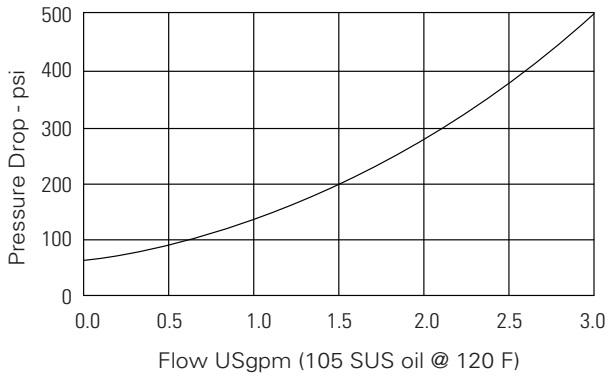

Where measurements are critical request certified drawings. We reserve the right to change specifications without notice.

CV3-4 - Check valve

Direct acting, poppet type
7.6 L/min (2 USgpm) • 350 bar (5000 psi)

Model code

CV3 – 4 (V) – P – * – ** – 00**

1 2 3 4 5 6 7

1 Function
CV3 - Check valve

2 Size
4 - 4 size

3 Seal material
Blank - Buna-N
V - Viton

4 Style
P - Poppet Type

5 Port size
000 - Cartridge only

6 Free flow cracking pressure
05 - 0,34 bar (5 psi)
60 - 4.1 bar (60 psi)

7 Special features
00 - None
(Only required if valve has special features, omitted if "00")

Dimensions
mm (inch)

Cartridge only
Basic code
CV3-4

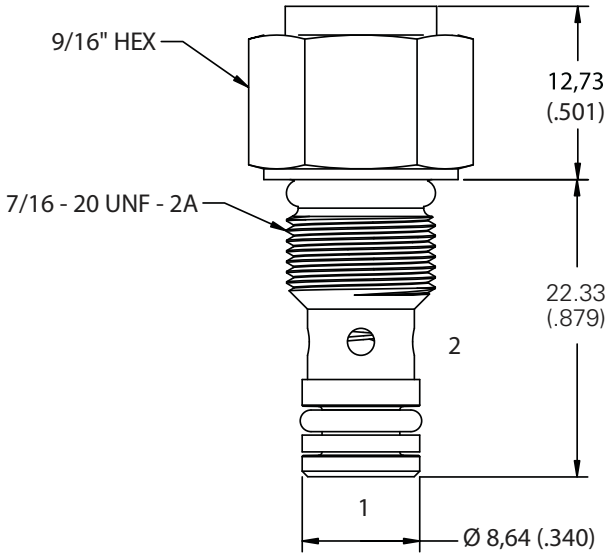

Note: Torque cartridge in aluminum or steel housing to 8.1-13.6 Nm (6-10 ft. lbs).

⚠ Warning
Aluminum housings can be used for pressures up to 210 bar (3000 psi). Steel housings must be used for operating pressures above 210 bar (3000 psi).

Where measurements are critical request certified drawings. We reserve the right to change specifications without notice.

CV3-8 - Check valve

Direct acting, poppet type
30 L/min (8 USgpm) • 350 bar (5000 psi)

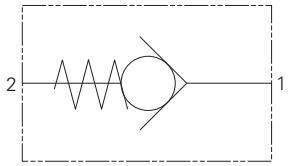

Operation

The valve remains closed until the spring bias is reached at port 1 at which time the poppet lifts of the seat and allows flow from port 1 to port 2. in the other direction the valve is closed.

Features

Compact screw in cartridge design. Hardened steel ball to limit leakage and extend service life.

Sectional view

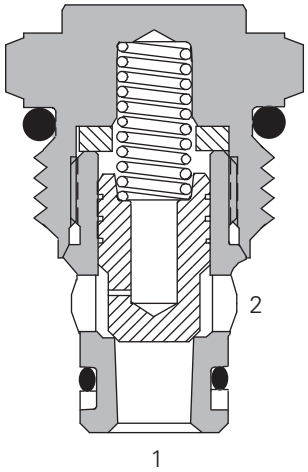

Description

This is a compact poppet type check valve ideal for use in manifolds for load sense or low flow applications.

Performance data

Ratings and specifications

Performance data is typical with fluid at 21,8 cST (105 SUS) and 49°C (120°F)	
Typical application pressure (all ports)	350 bar (5000 psi)
Cartridge fatigue pressure (infinite life)	280 bar (4000 psi)
Rated flow	30 L/min (8 USgpm)
Cracking pressures @ 1.0 L/min (0.25 USgpm)	4 - 0.28 bar (4 psi) 10 - 0.70 bar (10 psi) 15 - 1.03 bar (15 psi) 25 - 1.70 bar (25 psi) 30 - 2.07 bar (30 psi) 60 - 4.00 bar (60 psi)
Internal leakage	5 drops/min. maximum @ 350 bar (5000 psi)
Temperature range	–40° to 120°C (–40° to 248° F)
Cavity	C-8-2
Fluids	All general purpose hydraulic fluids such as: MIL - H-5606, SAE 10, SAE 20, etc.
Filtration	Cleanliness code 18/**16/13**
Standard housing materials	Aluminum or steel
Weight: cartridge only	0.04 kg (0.09 lbs.)
Seal kit	02-165875 (Buna-N) 02-165877 (Viton®)

Viton is a registered trademark of E.I. DuPont

Pressure drop

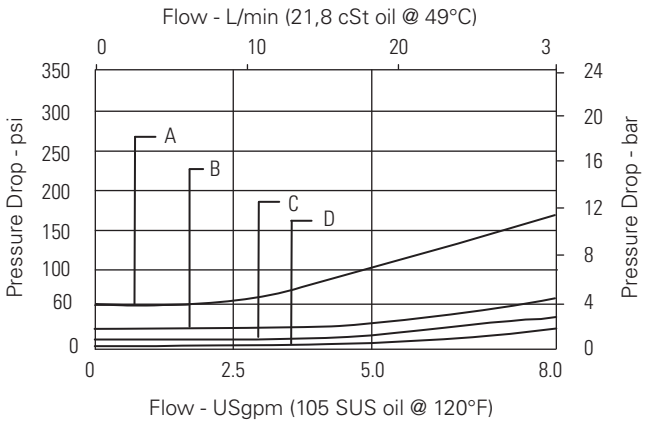

A – CV3-8-P-O-60
B – CV3-8-P-O-25
C – CV3-8-P-O-10
D – CV3-8-P-O-4

Where measurements are critical request certified drawings. We reserve the right to change specifications without notice.

CV3-8 - Check valve

Direct acting, poppet type
30 L/min (8 USgpm) • 350 bar (5000 psi)

Model code

CV3 – 8 (V) – P – (*) ** – * – 00**

1 2 3 4 5 6 7 8

1 Function
CV3 - Check valve

2 Size
8 - 8 size

3 Seal material
Blank - Buna-N
V - Viton

4 Style
P - Poppet

5 Valve housing material
Omit for cartridge only
A - Aluminum
S - Steel

6 Port size

Code	Port size	Housing number	
		Aluminum Fatigue rated	Steel Fatigue rated
0	Cartridge only		
4T	SAE 4	02-160730	02-160736
6T	SAE 6	02-160731	02-160737
8T	SAE 8	02-160732	02-160738
2G	1/4" BSPP	02-160727	02-160733
3G	3/8" BSPP	02-160728	02-160734

See section J for housing details.

7 Cracking pressure
004 - 0.28 bar (4 psi)
010 - 0.70 bar (10 psi)
015 - 1.03 bar (15 psi)
025 - 1.70 bar (10 psi)
030 - 2.07 bar (30 psi)
060 - 4.00 bar (60 psi)

8 Special features
00 - None
(Only required if valve has special features, omitted if "00")
SS - 316 Stainless Steel external components

Dimensions
mm (inch)

Cartridge only
Basic code
CV3-8

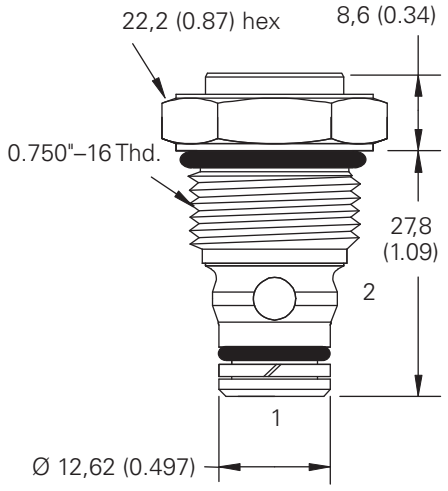

Installation drawing (Steel)

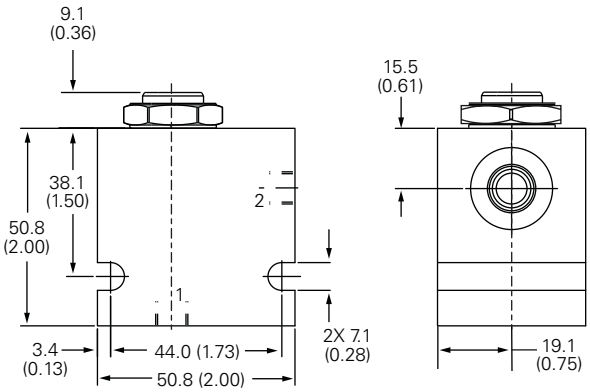

Note: Torque cartridge in aluminum or steel housing to 34-41 Nm (25-30 ft. lbs).

⚠ Warning
Aluminum housings can be used for pressures up to 210 bar (3000 psi). Steel housings must be used for operating pressures above 210 bar (3000 psi).

Where measurements are critical request certified drawings. We reserve the right to change specifications without notice.

CV3-10/CV13-10 - Check valve

Direct acting, poppet type
Up to 76 L/min (20 USgpm) • 350 bar (5000 psi)

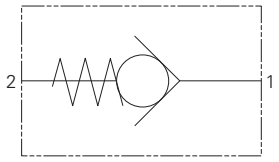

Operation

The valve remains closed until the spring bias is reached at port 1 at which time the poppet lifts of the seat and allows flow from port 1 to port 2. in the other direction the valve is closed.

Features

Hardened and ground working parts to limit leakage and extend service life.

Sectional view

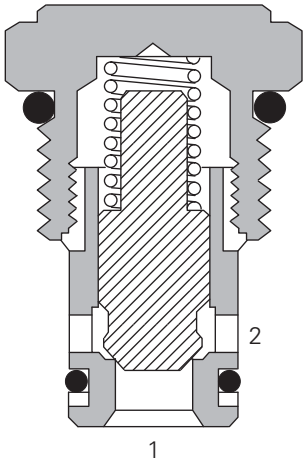

Description

This is a compact poppet type check valve ideal for use in manifolds for load sense or low flow applications.

Performance data

Ratings and specifications

Performance data is typical with fluid at 21,8 cST (105 SUS) and 49°C (120°F)	
Typical application pressure (all ports) CV3/CV13	210 bar (3000 psi)/350 bar (5000 psi)
Cartridge fatigue pressure (infinite life) CV3/CV13	210 bar (3000 psi)/350 bar (5000 psi)
Rated flow	76 L/min (20 USgpm)
Free flow cracking pressures @ 1.0 L/min (0.25 USgpm)	003 - 0.21 bar (3 psi) 010 - 0.69 bar (10 psi) 020 - 1.38 bar (20 psi) 035 - 2.41 bar (35 psi) 040 - 2.76 bar (40 psi) 065 - 4.48 bar (65 psi) 100 - 6.90 bar (100 psi) 180 - 12.40 bar (180 psi) 210 - 14.50 bar (210 psi)
Internal leakage, Port 2 to 1	5 drops/min. maximum @ 350 bar (5000 psi)
Temperature range	–40° to 120°C (–40° to 248° F)
Cavity	C-10-2
Fluids	All general purpose hydraulic fluids such as MIL - H-5606, SAE 10, SAE 20, etc.
Filtration	Cleanliness code 18/**16/13**
Standard housing material	Aluminum or steel
Weight: cartridge only	0.08 kg (0.17 lbs.)
Seal kit	565803 (Buna-N) 566086 (Viton®)

Viton is a registered trademark of E.I. DuPont

Pressure drop

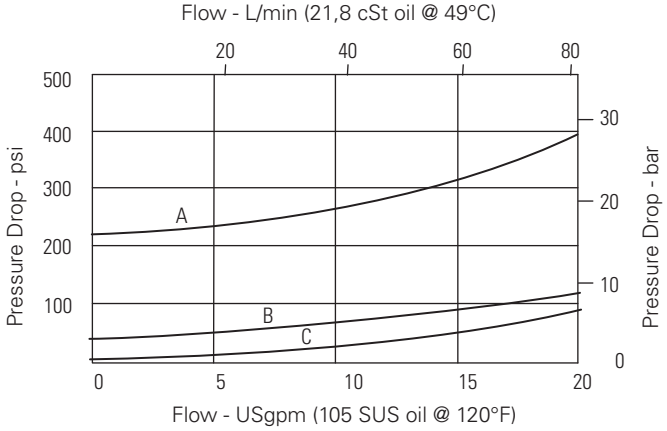

A – CV(*)3 10*P 000 210 00
B – CV(*)3 10*P 000 040 00
C – CV(*)3 10*P 000 003 00

Where measurements are critical request certified drawings. We reserve the right to change specifications without notice.

CV3-10/CV13-10 - Check valve

Direct acting, poppet type
Up to 76 L/min (20 USgpm) • 350 bar (5000 psi)

Model code

CV(*)3 – 10 * – P – * ** – * – 00**

1 2 3 4 5 6 7 8

1 Function

CV3 - Check valve 210 bar (3000 psi)
CV13 - Check valve 350 bar (5000 psi)

2 Size

10 - 10 size

3 Seal material

N - Buna-N
V - Viton

4 Style

P - Poppet

5 Valve housing material

0 - None
A - Aluminum
S - Steel

6 Port size

Code	Port size	Housing number		
		Aluminum light duty	Aluminum fatigue rated	Steel fatigue rated
00	Cartridge only			
3B	3/8" BSPP	02-175462	–	–
6T	SAE 6	566151	–	02-175100
8T	SAE 8	–	–	02-175101
2G	1/4" BSPP	–	876702	02-175102
3G	3/8" BSPP	–	876703	02-175103
6H	SAE 6	–	876700	–
8H	SAE 8	–	876701	–

See section J for housing details.

7 Free flow cracking pressure

003 - 0.21 bar (3 psi) (anticavitation)
010 - 0.69 bar (10 psi) (anticavitation)
020 - 1,38 bar (20 psi)
035 - 2,41 bar (35 psi)
040 - 2,76 bar (40 psi)
065 - 4,48 bar (65 psi)
100 - 6,90 bar (100 psi)
180 - 12,4 bar (180 psi)
210 - 14.5 bar (210 psi)

8 Special features

00 - None
(Only required if valve has special features, omitted if "00")
SS - 316 Stainless Steel external components

Dimensions

mm (inch)

Torque cartridge in aluminum housing 47-54 Nm (35-40 lbf ft).
Torque cartridge in steel housing 68-70 Nm (50-55 lbf ft)
A - 47-54 Nm (35 - 40 lbf. ft.)
S - 68-70 Nm (50-55 lbf ft.)

Cartridge only

Basic code
CV3-10

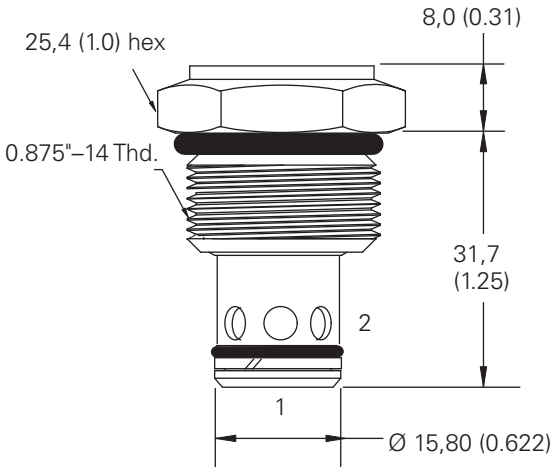

Installation drawing (Steel)

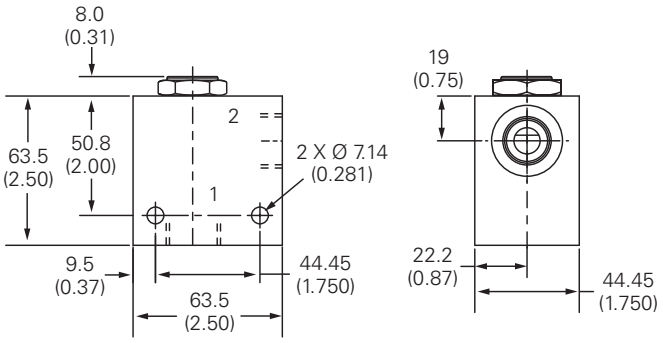

⚠ Warning

Aluminum housings can be used for pressures up to 210 bar (3000 psi). Steel housings must be used for operating pressures above 210 bar (3000 psi).

Where measurements are critical request certified drawings. We reserve the right to change specifications without notice.

CV16-10 - Check valve

Direct acting, poppet types, side in, nose out
76 L/min (20 USgpm) • 350 bar (5000 psi)

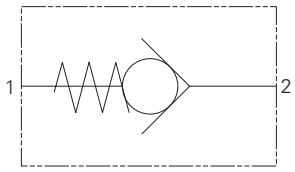

Operation

The valve remains closed until the spring bias is reached at port 2 at which time the poppet lifts of the seat and allows flow from port 2 to port 1. in the other direction the valve is closed.

Features

Hardened and ground working parts to limit leakage and extend service life. Robust design with a 350 bar max pressure rating.

Sectional view

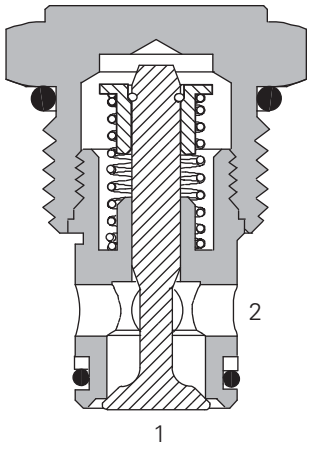

Description

This is a poppet type screw-in cartridge valve allowing free flow from port 2 to 1. This gives flexibility to the manifold designer allowing the production of the most compact solution.

Performance data

Ratings and specifications

Performance data is typical with fluid at 21,8 cST (105 SUS) and 49°C (120°F)	
Typical application pressure (all ports)	350 bar (5000 psi)
Cartridge fatigue pressure (infinite life)	310 bar (4500 psi)
Rated flow	76 L/min (20 USgpm)
Free flow cracking pressures @ 1.0 L/min (0.25 USgpm)	**05** - 0.34 bar (5 psi) **15** - 1.03 bar (15 psi) **25** - 1.70 bar (25 psi) **50** - 3.40 bar (50 psi)
Internal leakage, Port 2 to 1	5 drops/min. maximum @ 350 bar (5000 psi)
Temperature range	–40° to 120°C (–40° to 248°F)
Cavity	C-10-2
Fluids	All general purpose hydraulic fluids such as MIL - H-5606, SAE 10, SAE 20, etc.
Filtration	Cleanliness code 18/**16/13**
Standard housing materials	Aluminum or steel
Weight, cartridge only	0.08 kg (0.17 lbs.)
Seal kit	565803 (Buna-N) 566086 (Viton®)

Viton is a registered trademark of E.I. DuPont

Pressure drop

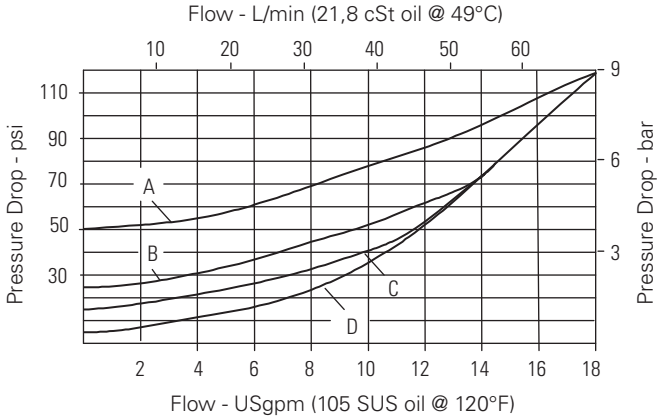

A – CV16-10-P-O-50
B – CV16-10-P-O-25
C – CV16-10-P-O-15
D – CV16-10-P-O-5

Where measurements are critical request certified drawings. We reserve the right to change specifications without notice.

CV16-10 - Check valve

Direct acting, poppet types, side in, nose out
76 L/min (20 USgpm) • 350 bar (5000 psi)

Model code

CV16 – 10 (*) – P – (*) ** – * – 00**

1 2 3 4 5 6 7 8

1 Function

CV16 - Check valve

2 Size

10 - 10 size

3 Seal material

Blank - Buna-N
V - Viton

4 Style

P - Poppet

5 Valve housing material

Omit for cartridge only
A - Aluminum
S - Steel

6 Port size

Code	Port size	Housing number		
		Aluminum light duty	Aluminum fatigue rated	Steel fatigue rated
0	Cartridge only			
3B	3/8" BSPP	02-175462	–	–
6T	SAE 6	566151	–	02-175100
8T	SAE 8	–	–	02-175101
2G	1/4" BSPP	–	876702	02-175102
3G	3/8" BSPP	–	876703	02-175103
6H	SAE 6	–	876700	–
8H	SAE 8	–	876701	–

See section J for housing details.

7 Free flow cracking pressure

5 - 0.34 bar (5 psi) (Anti-cavitation)
15 - 1.03 bar (15 psi)
25 - 1.70 bar (25 psi)
50 - 3.40 bar (50 psi)

8 Special features

00 - None (Only required if valve has special features, omitted if "00")
SS - 316 Stainless Steel external components

Dimensions

mm (inch)

Note: Torque cartridge in aluminum housing 47-54 Nm (35-40 ft. lbs). Torque cartridge in steel housing 68-70 Nm (50-55 ft. lbs).

Cartridge only

Basic code
CV3-10

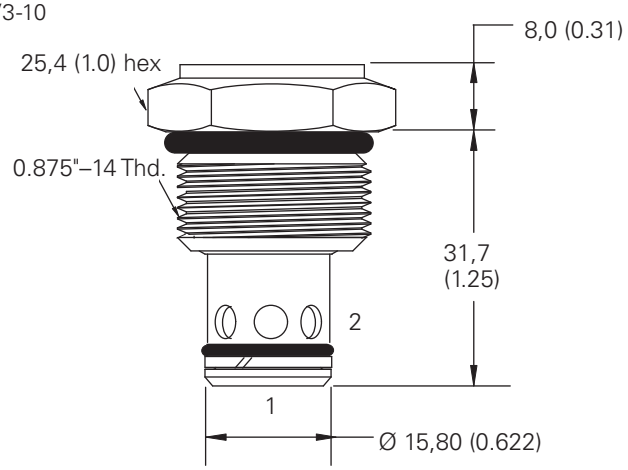

Installation drawing (Steel)

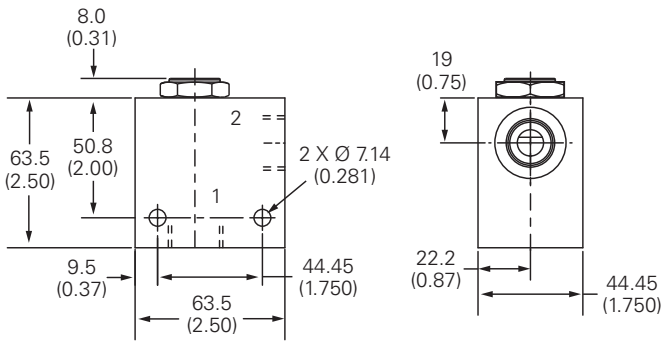

⚠ Warning

The cavity should be machined to 14,29 (0.562) maximum diameter and 36,00 (1.417) maximum depth (see cavity detail, page M-12).

⚠ Warning

Aluminum housings can be used for pressures up to 210 bar (3000 psi). Steel housings must be used for operating pressures above 210 bar (3000 psi).

Where measurements are critical request certified drawings. We reserve the right to change specifications without notice.

CV11-12 - Check valve

Direct acting, poppet type
114 L/min (30 USgpm) • 350 bar (5000 psi)

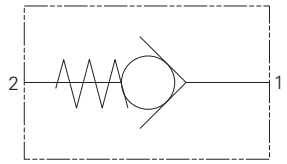

Operation

The valve remains closed until the spring bias is reached at port 1 at which time the poppet lifts of the seat and allows flow from port 1 to port 2. in the other direction the valve is closed.

Pilot operation

Hardened and ground working parts to limit leakage and extend service life. Robust design with a 350 bar max pressure rating.

Sectional view

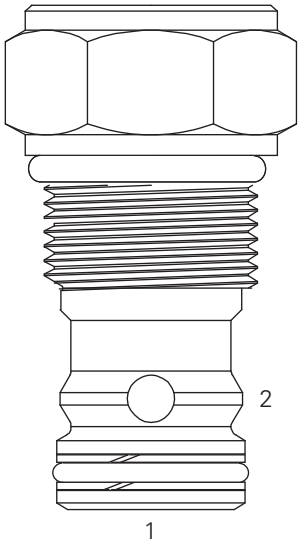

Performance data

Ratings and specifications

Performance data is typical with fluid at 21,8 cST (105 SUS) and 49°C (120°F)	
Typical application pressure (all ports)	350 bar (5000 psi)
Cartridge fatigue pressure (infinite life)	350 bar (5000 psi)
Rated flow	114 L/min (30 USgpm)
Free flow cracking pressures @ 1.0 L/min (0.25 USgpm)	**2.5** - 0.17 bar (2.5 psi) **5.0** - 0.35 bar (5 psi) **10.0** - 0.69 bar (10 psi) **20.0** - 1.38 bar (20 psi) **40.0** - 2,76 bar (40 psi) **80.0** - 5,50 bar (80 psi) **160.0** - 11,0 bar (160 psi)
Internal leakage, Port 2 to 1	5 drops/min. maximum @ 350 bar (5000 psi)
Hysteresis	Less than 0,35 bar (5 psi)
Temperature range	–40° to 120°C (–40° to 248°F)
Cavity	C-12-2 or C-12-2U
Fluids	All general purpose hydraulic fluids such as MIL - H-5606, SAE 10, SAE 20, etc.
Filtration	Cleanliness code 18/**16/13**
Standard housing materials	Aluminum or steel
Weight, cartridge only	0,24 kg (0.54 lbs.)
Seal kit	02-165889 (Buna-N) 02-165888 (Viton®)

Viton is a registered trademark of E.I. DuPont

Description

This is a poppet type, direct acting screw-in cartridge check valve allowing free flow from port 1 to 2.

Pressure drop

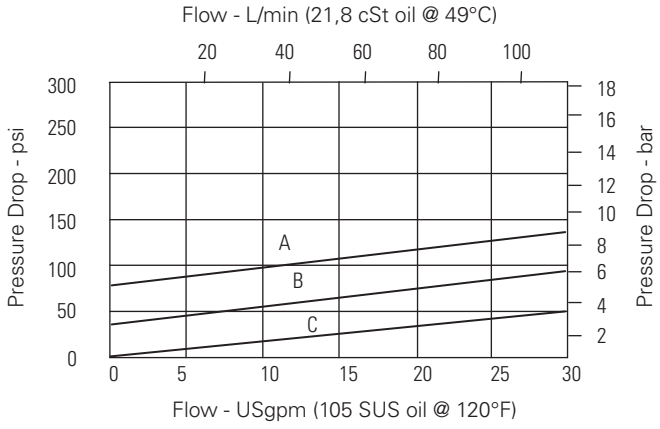

A – CV11-12-P-O-80
B – CV11-12-P-O-20
C – CV11-12-P-O-2.5

Where measurements are critical request certified drawings. We reserve the right to change specifications without notice.

CV11-12 - Check valve

Direct acting, poppet type
114 L/min (30 USgpm) • 350 bar (5000 psi)

Model code

CV11 – 12 (V) – P – (*) * (U) – ** – 00**

1 2 3 4 5 6 7 8 9

1 Function
CV11 - Check valve

2 Size
12 - 12 size

3 Seal material
Blank - Buna-N
V - Viton

4 Style
P - Poppet

5 Valve housing material
Omit for cartridge only
A - Aluminum
S - Steel

6 Port size

Code	Port size	Housing number			
		C-12-2U Aluminum light duty	C-12-2 Aluminum fatigue rated	C-12-2U Steel fatigue rated	C-12-2 Steel fatigued rated
0	Cartridge only				
10T	SAE 10	02-160641	02-160640	02-169817	02-169744
12T	SAE 12	02-160645	02-160644	02-168790	02-169782
4G	1/2" BSPP	02-161116	02-161118	02-172512	02-172062
6G	3/4" BSPP	02-161115	02-161117	02-162922	02-169665

See section J for housing details.

7 Cavity
Blank - Cavity without undercut
U - Cavity with undercut

8 Cracking pressure
2.5 - 0,17 bar (2.55 psi)
5.0 - 0,35 bar 5 psi)
10 - 0,69 bar (10 psi)
20 - 1,38 bar (20 psi)
40 - 2,75 bar (40 psi)
80 - 5,50 bar (80 psi)
160 - 11,0 bar (160 psi)

9 Special features
00 - None
(Only required if valve has special features, omitted if "00")

Dimensions
mm (inch)

Torque cartridge in housing
A - 81-95 Nm (60-70 ft. lbs).
S - 102-115 Nm (75-85 ft. lbs).

Cartridge only
Basic code
CV11

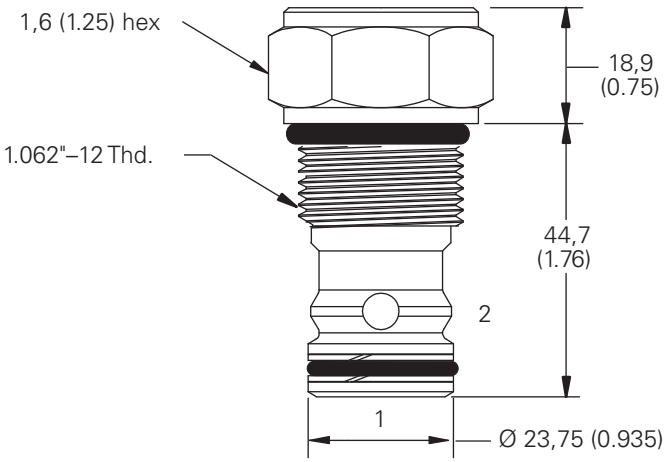

Installation drawing (Steel)

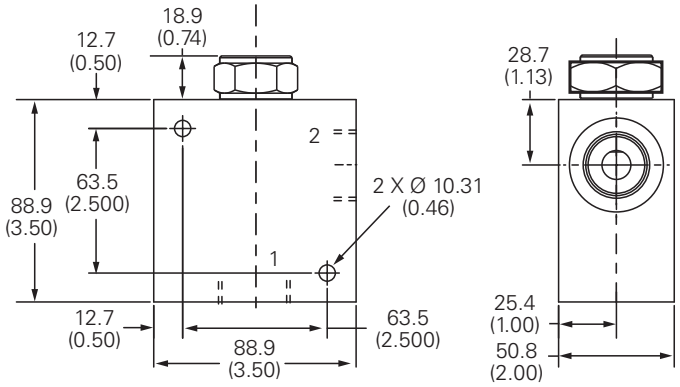

⚠ Warning
Aluminum housings can be used for pressures up to 210 bar (3000 psi). Steel housings must be used for operating pressures above 210 bar (3000 psi).

Where measurements are critical request certified drawings. We reserve the right to change specifications without notice.

CV1-16/CV11-16 - Check valve

Direct acting, poppet type
151 L/min (40 USgpm) • 350 bar (5000 psi)

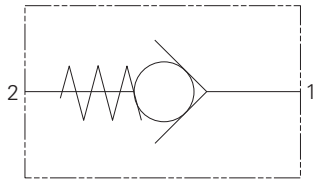

Operation

The valve remains closed until the spring bias is reached at port 1 at which time the poppet lifts of the seat and allows flow from port 1 to port 2. In the other direction the valve is closed.

Features

Hardened and ground working parts to limit leakage and extend service life.

Sectional view

CV1-16

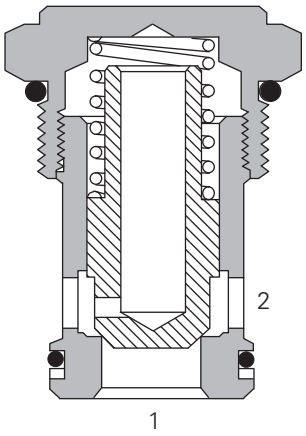

Performance data

Ratings and specifications

Performance data is typical with fluid at 21,8 cST (105 SUS) and 49°C (120°F)	
Typical application pressure (all ports)	CV1-16 210 bar (3000 psi)/CV11 350 bar (5000 psi)
Cartridge fatigue pressure (infinite life)	CV1-16 210 bar (3000 psi)/CV11-16 350 bar (5000 psi)
Rated flow	151 L/min (40 USgpm)
Free flow cracking pressures @ 1 L/min (0.25 USgpm) **Note:** Only the 5 psi option is available for CV11-16	**5** - 0,34 bar (5 psi) **20** - 1,34 bar (20 psi) **30** - 2,07 bar (30 psi) **40** - 2,67 bar (40 psi) **50** - 3,45 bar (50 psi) **100** - 6,90 bar (100 psi)
Internal leakage, Port 2 to 1	5 drops/min. maximum @ 210 bar (3000 psi)
Temperature range	–40° to 120°C (–40° to 248°F)
Cavity	C-16-2
Fluids	All general purpose hydraulic fluids such as: MIL - H-5606, SAE 10, SAE 20, etc.
Filtration	Cleanliness code 18/**16/13**
Standard housing materials	Aluminum or steel
Weight, cartridge only	0,26 kg (0.58 lbs.)
Seal kit	565810 (Buna-N) 889609 (Viton®)

Viton is a registered trademark of E.I. DuPont

Description

This is a poppet type, direct acting screw-in cartridge check valve allowing free flow from port 1 to 2.

Pressure drop

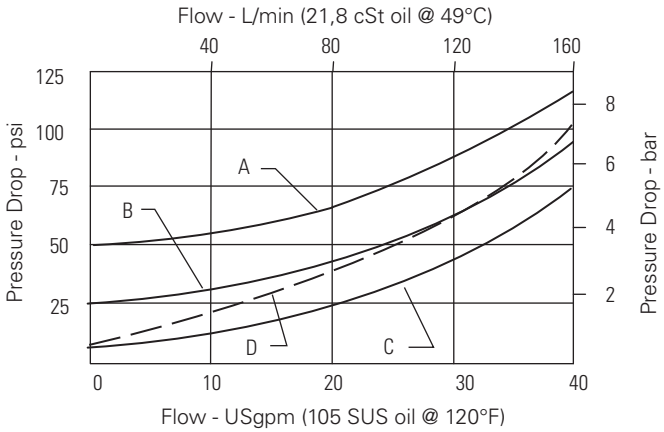

A – CV(*)1-16-P-O-50
B – CV(*)1-16-P-O-20
C – CV(*)1-16-P-O-15
D – CV(*)1-16-P-O-5

Where measurements are critical request certified drawings. We reserve the right to change specifications without notice.

CV1-16/CV11-16 - Check valve

Direct acting, poppet type
151 L/min (40 USgpm) • 350 bar (5000 psi)

Model code

CV(*)1 – 16 (V) – P * – ** – 00**

1 2 3 4 5 6 7

1 Function

CV1 - Check valve, 210 bar
CV11 - Check valve, 350 bar

2 Size

16 - 16 size

3 Seal material

Blank - Buna-N
V - Viton

4 Style

P - Poppet

5 Port size

Code	Port size	Housing number		
		Aluminum light duty	Aluminum fatigue rated	Steel fatigue rated
0	Cartridge only			
6B	3/4" BSPP	02-175463	–	
10T	SAE 10	–	–	02-175104
12T	SAE 12	566149	–	02-175105
4G	1/2" BSPP	–	876716	02-175106
6G	3/4" BSPP	–	876718	02-175107
10H	SAE 10	–	876717	
12H	SAE 12	–	566113	

See section J for housing details.

6 Cracking pressure

5 - 0,34 bar (5 psi) (Anti-cavitation)
20 - 1,34 bar (20 psi)
30 - 2.07 bar (30 psi)
40 - 2.67 bar (40 psi)
50 - 3.45 bar (50 psi)
100 - 6.90 bar (100 psi)

7 Special features

00 - None (Only required if valve has special features, omitted if "00")
SS - 316 Stainless Steel external components

Dimensions

mm (inch)

Torque cartridge in housing
A- 108-122 Nm (80-90 ft lbs)
S -136-149 Nm (100-110 ft lbs)

Cartridge only

Basic code
CV1, CV11

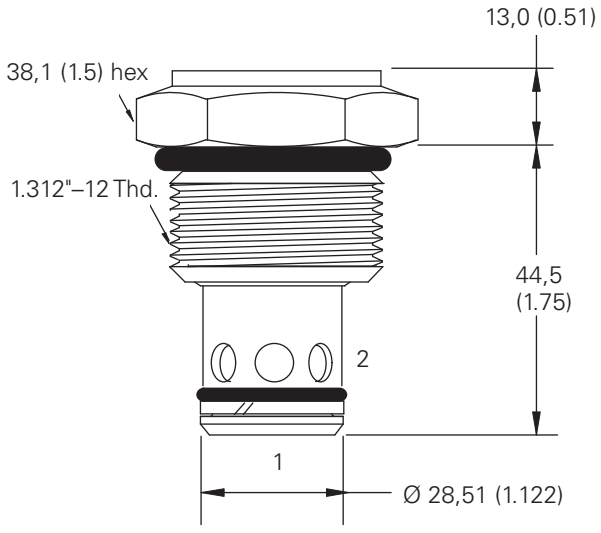

Installation drawing (Aluminum)

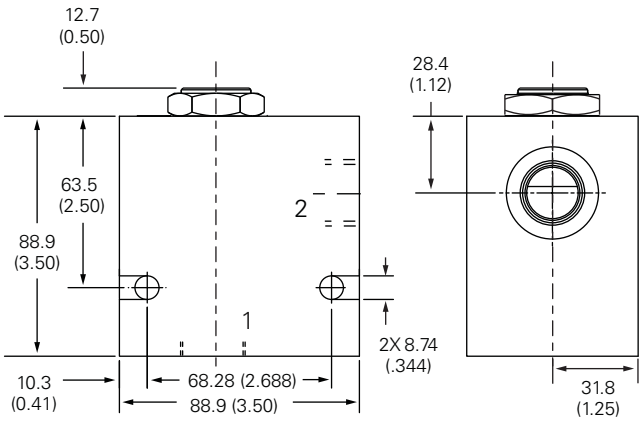

⚠ Warning

Aluminum housings can be used for pressures up to 210 bar (3000 psi). Steel housings must be used for operating pressures above 210 bar (3000 psi).

G

Where measurements are critical request certified drawings. We reserve the right to change specifications without notice.

CV2-20 - Check valve

Direct acting, poppet type
227 L/min (60 USgpm) • 210 bar (3000 psi)

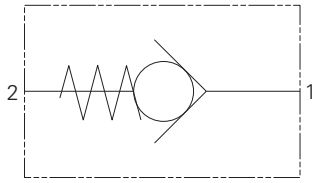

Operation

This is a poppet type, direct acting screw-in cartridge check valve allowing free flow from port 1 to 2.

Features

Hardened and ground working parts to limit leakage and extend service life. Robust design with a 210 bar (3000 psi) max pressure rating.

Sectional view

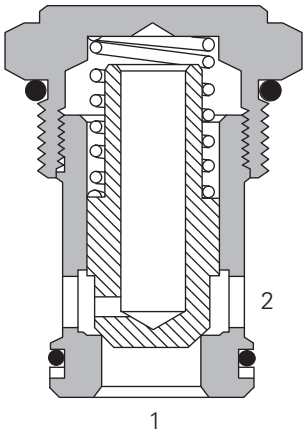

Performance data

Ratings and specifications

Performance data is typical with fluid at 21,8 cST (105 SUS) and 49°C (120°F)	
Typical application pressure (all ports)	210 bar (3000 psi)
Cartridge fatigue pressure (infinite life)	210 bar (3000 psi)
Rated flow	227 L/min (60 USgpm)
Free flow cracking pressures @ 1 L/min (0.25 USgpm)	**5** - 0,34 bar (5 psi) **15** - 1,03 bar (15 psi) **30** - 2,07 bar (30 psi) **60** - 4,14 bar (60 psi) **100** - 6,90 bar (100 psi)
Internal leakage, Port 2 to 1	5 drops/min. maximum @ 210 bar (3000 psi)
Temperature range	–40° to 120°C (–40° to 248°F)
Cavity	C-20-2
Fluids	All general purpose hydraulic fluids such as MIL - H-5606, SAE 10, SAE 20, etc.
Filtration	Cleanliness code 18**/16/13**
Standard housing material	Aluminum
Weight, cartridge only	0,49 kg (1.09 lbs.)
Seal kit	889615 (Buna-N) 889619 (Viton®)

Viton is a registered trademark of E.I. DuPont

Description

This is a poppet type, direct acting screw-in cartridge check valve allowing free flow from port 1 to 2.

Pressure drop

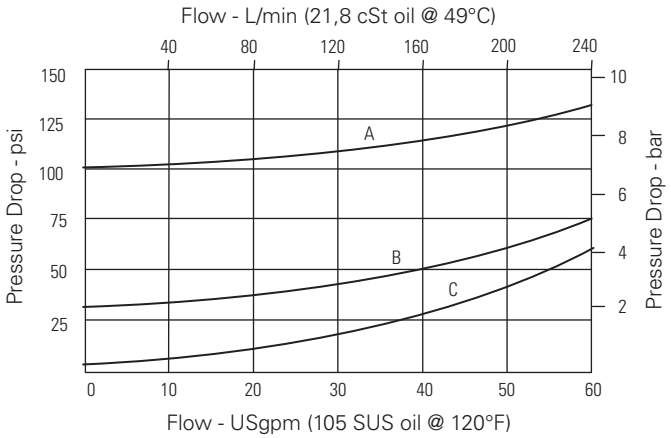

A – CV2-20-P-O-100
B – CV2-20-P-O-30
C – CV2-20-P-O-5

Where measurements are critical request certified drawings. We reserve the right to change specifications without notice.

CV2-20 - Check valve

Direct acting, poppet type
227 L/min (60 USgpm) • 210 bar (3000 psi)

Model code

CV2 _ 20 (V) _ P _ * _ *** _ 00**

1 2 3 4 5 6 7

1 Function
CV2 - Check valve

2 Size
20 - 20 size

3 Seal material
Blank - Buna-N
V - Viton

4 Style
P - Poppet

5 Port size

Code	Port size	Housing number	
		Aluminum light duty	Aluminum fatigue rated
0	Cartridge only		
8B	1" BSPP	02-175464	–
16T	SAE 16	566409	–
6G	3/4" BSPP	–	876732
8G	1" BSPP	–	876734
12H	SAE 12	–	876733
16H	SAE 16	–	876735

6 Free flow cracking pressure
5 - 0,34 bar (5 psi) Anti-cavitation
15 - 1,03 bar (15 psi)
30 - 2,07 bar (30 psi)
60 - 4,14 bar (60 psi)
100 - 6,90 bar (100 psi)

7 Special features
00 - None
(Only required if valve has special features, omitted if "00")

Dimensions
mm (inch)

Note: Torque cartridge in aluminum housing 128-155 Nm (95-115 ft lbs)

Cartridge only
Basic code
CV2

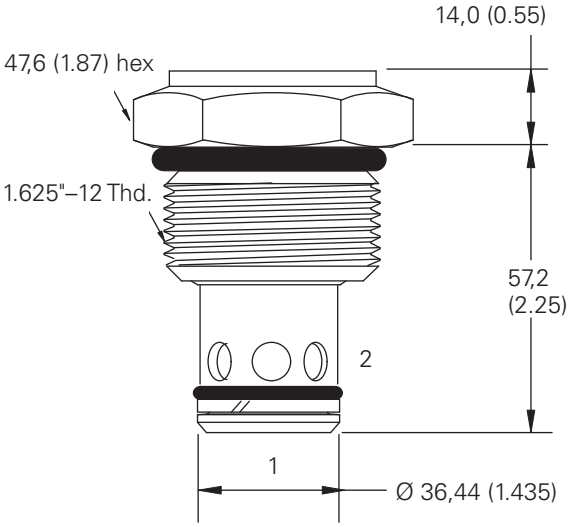

Installation drawing (Aluminum)

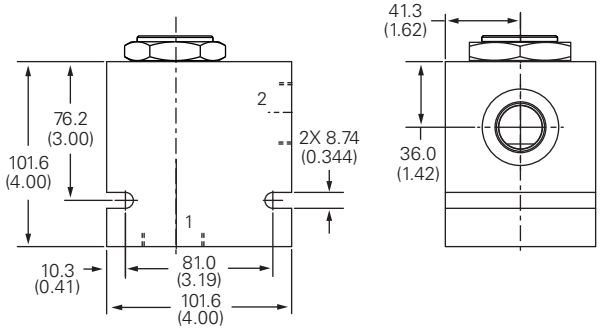

Where measurements are critical request certified drawings. We reserve the right to change specifications without notice.

G

3CA300 - Check valve

Direct acting, poppet style
300 L/min (80 USgpm) • 350 bar (5000 psi)

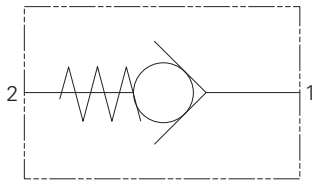

Operation

This is a poppet type, direct acting screw-in cartridge check valve allowing free flow from port 1 to 2.

Features

Hardened and ground working parts to limit leakage and extend service life. Rhobust design with a 350 bar (5000 psi) max pressure rating.

Sectional view

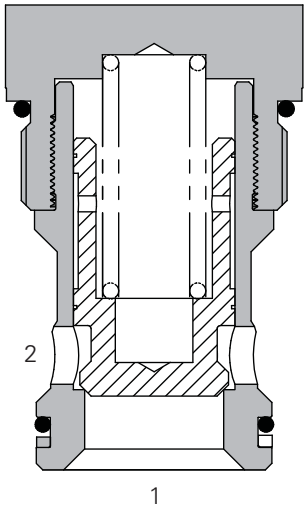

Performance data

Ratings and specifications

Figures based on: Oil Temp = 40°C Viscosity = 32 cSt (150 SUS)	
Typical application pressure (all ports)	350 bar (5000 psi)
Rated flow	300 L/min (80 USgpm)
Free flow cracking pressure	**0.3** -3 bar (4.4 psi) **1.0** - 1 bar (14.5 psi) **2.0** - 2 bar (29 psi) **4.0** - 4 bar (58 psi) **7.0** - 7 bar (100 psi)
Leakage	0.2 millilitres/min nominal
Temperature range	–30° to 90°C (–22° to 194°F)
Cavity	A13245 (C-20-2) See Section M)
Torque cartridge into cavity	150 Nm (110 lbs ft)
Filtration	BS5540/4 Class 18/13 (25 micron nominal)
Cartridge material	All steel construction. External parts electroless zinc plated.
Standard housing material	Aluminum (up to 210 bar) Add suffix '377' for steel option.
Norminal Viscosity Range	15 to 250 cSt
Weight	0.48 kg (1.06 lbs.)
Mounting position	Unrestricted
Seal kit	SK1341 (Nitrile) SK1341V (Viton®)

Viton is a registered trademark of E.I. DuPont

Descriptions

This is a poppet type, dirct acting screw-in cartridge check valve allowing free flow from port 1 to 2.

Pressure drop

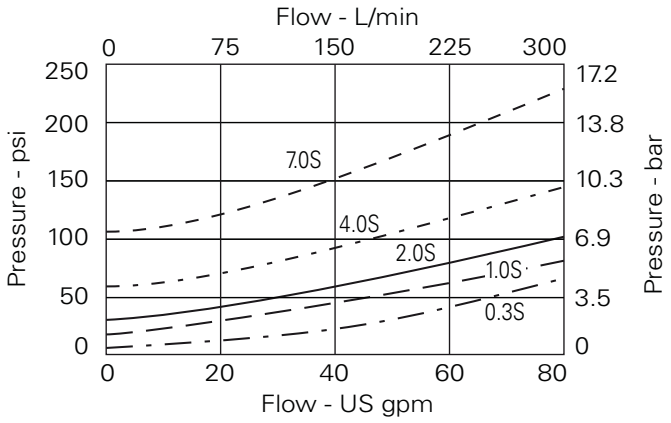

Where measurements are critical request certified drawings. We reserve the right to change specifications without notice.

3CA300 - Check valve

Direct acting, poppet style
300 L/min (80 USgpm) • 350 bar (5000 psi)

Model code

3CA*–10W – 1.0 – S**

1 2 3 4

1 Function

3CA300 - Cartridge only
3CA355 - Cartridge and body

2 Port size - bodied valves only

Code	Port size	Housing number	
		Aluminum	Steel
10W	1 1/4" BSP	C24005	C24006
20T	1 1/4" SAE	C24011	C24012

3 Cracking pressure

0.3 - 0.3 bar (4.4 psi)
1.0 - 1.0 bar (14.5 psi)
2.0 - 2.0 bar (29 psi)
4.0 - 4.0 bar (58 psi)
7.0 - 7.0 bar (100 psi)

4 Seals

S - Nitrile (For use with most industrial hydraulic oils)

SV - Viton (For high temperature and most special fluid applications)

Dimensions

mm (inch)

Note: For applications above 210 please consult our technical department or use the steel body option.

Cartridge only

Basic code
3CA300

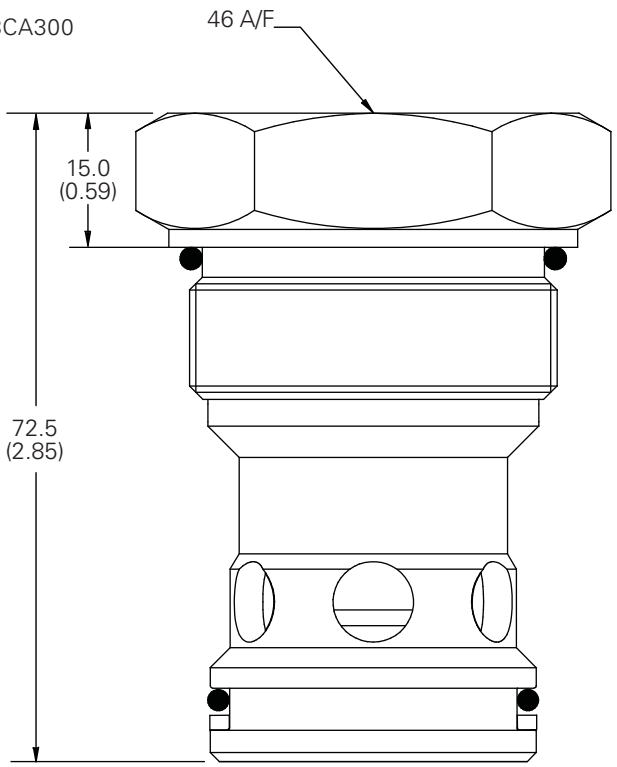

Single valve

1 1/4", 1 1/2" Ports
Basic code 3CA355

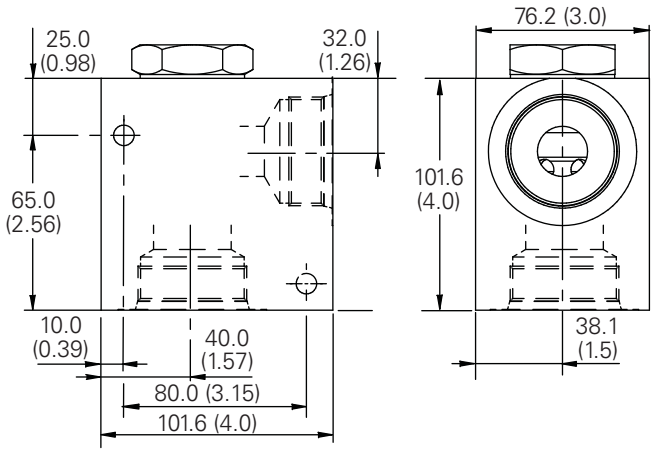

Where measurements are critical request certified drawings. We reserve the right to change specifications without notice.

CV6-4 - Check valve

Direct acting, poppet type with orifice
7.6 L/min (2 USgpm) • 350 bar (5000 psi)

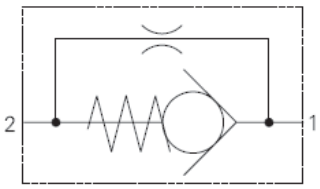

Operation

The poppet remains on its seat until the pressure drop across the orifice overcomes the spring force over the seat area. Full flow will then take place from port 1 to 2. Flow from port 2 to 1 will be restricted by the orifice.

Features

Hardened and ground working parts extend service life.
Robust design with a 350 bar (5000 psi) max pressure rating.
Compact simple solution in a single cartridge.

Sectional view

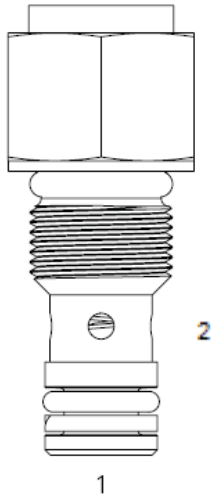

Performance data

Ratings and specifications

Performance data is typical with fluid at 21,8 cST (105 SUS) and 49°C (120°F)	
Typical application pressure (all ports)	350 bar (5000 psi)
Cartridge fatigue pressure (infinite life)	350 bar (5000 psi)
Rated Flow	7.6 L/min (2 US gpm)
Free flow cracking pressure @ 1 L/min (0.25 USgpm)	5 PSI – 0.34 Bar
Orifice size range	0.015" to 0.050" (0.381 mm – 1.270 mm)
Temperature range	–40° to 120°C (–40° to 248°F)
Cavity	C-4-2
Fluids	All general purpose hydraulic fluids such as: MIL-H-5606, SAE10, SAE20 etc
Filtration	Cleanliness code 18/16/13
Weight cartridge only	0.04 kg (.09 lbs)
Seal Kit	9900174-000 (Buna-N) 9900175-00 (Viton®)

Descriptions

This is a poppet type screw-in cartridge check valve with a by-pass orifice. This will allow free flow into an actuator while restricting the flow out of it.

Pressure drop

Cartridge with body

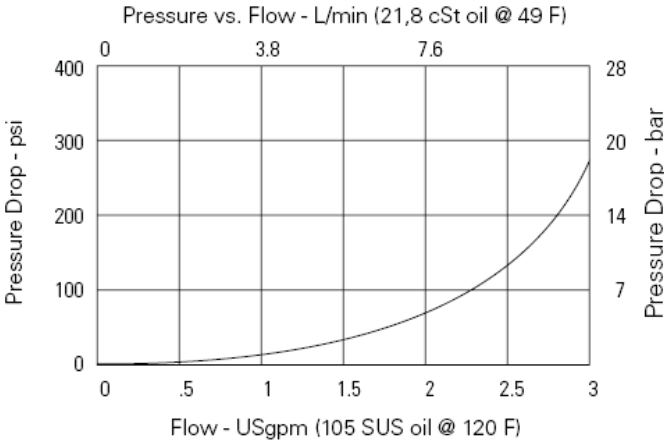

Where measurements are critical request certified drawings. We reserve the right to change specifications without notice.

CV6-4 - Check valve

Direct acting, poppet type with orifice
7.6 L/min (2 USgpm) • 350 bar (5000 psi)

Model code

CV6 – 4 – * – P – * – ** – *** – **

1 2 3 4 5 6 7 8

1 Function
CV6 - Check valve with bypass orifice

2 Size
4 - 4 size

3 Seal material
Blank - Buna-N
V - Viton

4 Style
P - Poppet

5 Port size
000 - Cartridge only

6 Free flow cracking pressure
05 - 0, 34 bar (5 psi)

7 Orifice size
Specify in thousandths of an inch
Ø - 0.050 max
Ø - 0.015 min

8 Special features
00 - None
(Only required if valve has special features, omitted if "00")

Dimensions
mm (inch)

Cartridge only
Basic code
CV6-4

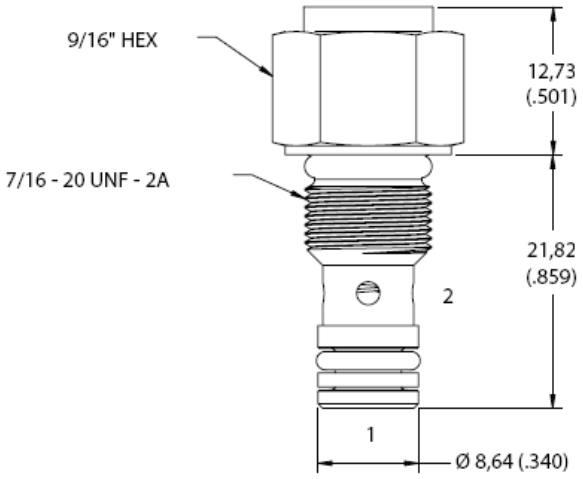

Note: Torque cartidge in aluminum or steel housing to 8.1-13.6 Nm (6-10 ft. lbs).

⚠ Warning
Aluminum housings can be used for pressures up to 210 bar (3000 psi) Steel housings must be used for operating pressures above 210 bar (3000 psi).

Where measurements are critical request certified drawings. We reserve the right to change specifications without notice.

CV6-10 - Check valve

Direct acting, poppet type with orifice
76 L/min (20 USgpm) • 350 bar (5000 psi)

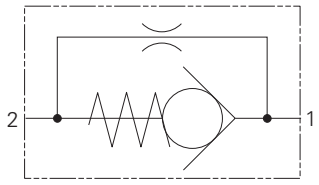

Operation

The poppet remains on its seat until the pressure drop across the orifice overcomes the spring force over the seat area. Full flow will then take place from port 1 to 2. Flow from port 2 to 1 will be restricted by the orifice.

Features

Hardened and ground working parts extend service life. Robust design with a 350 bar (5000 psi) max pressure rating. Compact simple solution in a single cartridge.

Sectional view

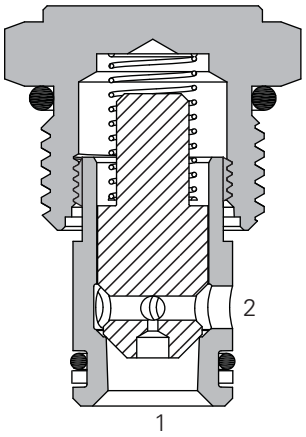

Performance data

Ratings and specifications

Performance data is typical with fluid at 21,8 cST (105 SUS) and 49°C (120°F)	
Typical application pressure (all ports)	350 bar (5000 psi)
Cartridge fatigue pressure (infinite life)	350 bar (5000 psi)
Rated flow	76 L/min (20 USgpm)
Free flow cracking pressures @ 1 L/min (0.25 USgpm)	**003** - 0,21 bar (3 psi) **010** - 0,69 bar (10 psi) **020** - 1,38 bar (20 psi) **035** - 2,41 bar (35 psi) **040** - 2,76 bar (40 psi) **065** - 4,48 bar (65 psi) **100** - 6,90 bar (100 psi) **180** - 12,40 bar (180 psi) **210** - 14,50 bar (210 psi)
Orifice size range	0.015 to 0.125" (0.381 - 3.175 mm)
Temperature range	–40° to 120°C (–40° to 248°F)
Cavity	C-10-2
Fluids	All general purpose hydraulic fluids such as MIL - H-5606, SAE 10, SAE 20, etc.
Filtration	Cleanliness code 18/**16/13**
Standard housing material	Aluminum or steel
Weight, cartridge only	0,49 kg (1.09 lbs.)
Seal kit	889615 (Buna-N) 889619 (Viton®)

Viton is a registered trademark of E.I. DuPont

Description

This is a poppet type screw-in cartridge check valve with a by-pass orifice. This will allow free flow into an actuator while restricting the flow out of it.

Pressure drop

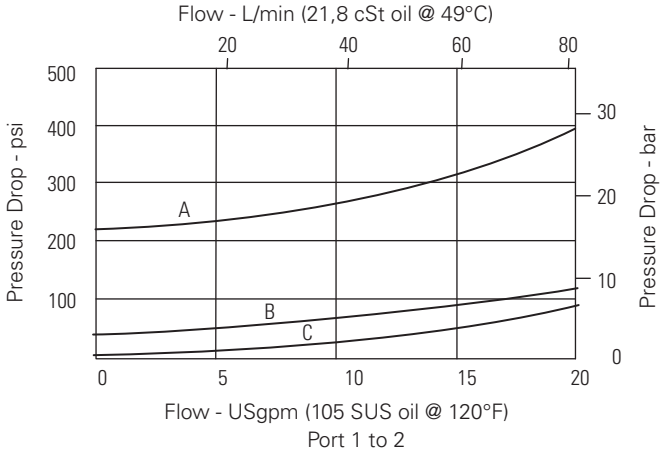

A – CV6 10*P 000 210 00
B – CV6 10*P 000 040 00
C – CV6 10*P 000 003 00

Where measurements are critical request certified drawings. We reserve the right to change specifications without notice.

CV6-10 - Check valve

Direct acting, poppet type with orifice
76 L/min (20 USgpm) • 350 bar (5000 psi)

Model code

CV6	–10	*	– P	– *	***	–***	–***	– 00
1	2	3	4	5	6	7	8	9

1 Function
CV6 - Check valve with bypass orifice

2 Size
10 - 10 size

3 Seal material
N - Buna-N
V - Viton

4 Style
P - Poppet

5 Valve housing material
0 - No housing
A - Aluminum
S - Steel

6 Free flow cracking pressure
003 - 0,21 bar (3 psi) (Anti-cavitation)
010 - 0,69 bar (10 psi) (Anti-cavitation)
020 - 1,38 bar (20 psi)
035 - 2,41 bar (35 psi)
040 - 2,76 bar (40 psi)
065 - 4,48 bar (65 psi)
100 - 6,90 bar (100 psi)
180 - 12,4 bar (180 psi)
210 - 14,5 bar (210 psi)

7 Port size

Code	Port size	Housing number		
		Aluminum light duty	Aluminum fatigue rated	Steel fatigue rated
3B	3/8" BSPP	02-175462	–	–
6T	SAE 6	566151	–	02-175100
8T	SAE 8	–	–	02-175101
2G	1/4" BSPP	–	876702	02-175102
3G	3/8" BSPP	–	876703	02-175103
6H	SAE 6	–	876700	–
8H	SAE 8	–	876701	–

8 Orifice size
Specify in thousandths of an inch
Ø - 0.125 max
Ø - 0.015 min

9 Special features
00 - None
(Only required if valve has special features, omitted if "00")
SS - 316 Stainless Steel external components

Dimensions
mm (inch)

Torque cartridge in housing
A - 47-54 Nm (35-40 ft lbs).
S - 68-70 Nm (50-55 ft lbs).

Cartridge drawing
Basic code
CV6-10

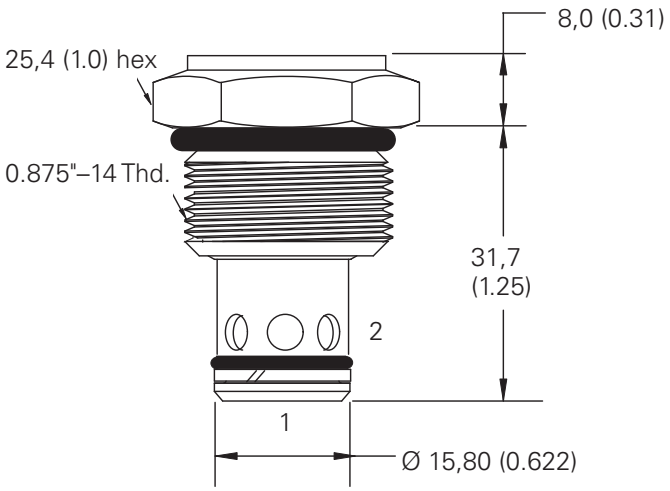

Installation drawing (Steel)

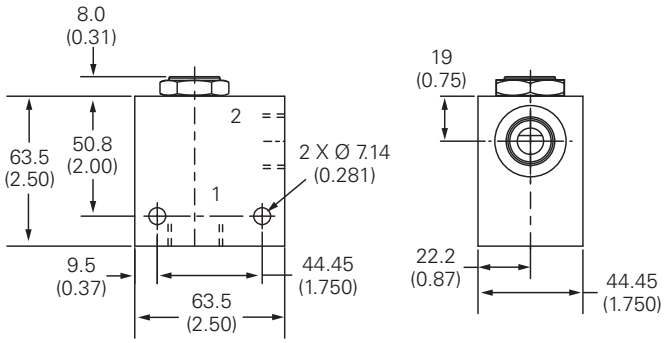

Where measurements are critical request certified drawings. We reserve the right to change specifications without notice.

RCV3-10 - Check valve

Restrictive check valve
76 L/min (20 USgpm) • 350 bar (5000 psi)

Description

The RCV3-10-P is a poppet type, screw-in cartridge check valve with stroke limiter.

Operation

This valve remains closed until the spring bias is reached at port 1 at which time the poppet lifts off the seat and allows flow from port 1 to port 2. The effective orifice in the free flow direction is adjustable.

Functional symbol



Sectional view

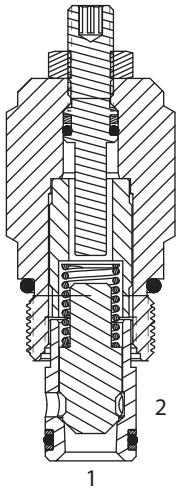

Ratings and specifications

Performance data is typical with fluid at 21,8 cSt (105 SUS) and 49°C (120°F)	
Typical application pressure (all ports)	350 bar (5000 psi)
Cartridge fatigue pressure (infinite life)	350 bar (5000 psi)
Rated flow	76 L/min (20 USgpm
Free flow cracking pressure @1 L/min (0.25 USgpm)	003 – 0,21 bar (3 psi) 010 – 0,69 bar (10 psi) 020 –1,38 bar (20 psi) 040 – 2,76 bar (40 psi) 065 – 4,48 bar (65 psi) 100 – 6,90 bar (100 psi) 180 –12,40 bar (180 psi) 210 –14,50 bar (210 psi)
Internal leakage, Port 2 to 1	5 drops/min maximum @ 210 bar (3000 psi)
Temperature range	-40° to 120°C (-40° to 248°F)
Cavity	C–10–2
Fluids	All general purpose hydraulic fluids such as MIL–H–5606, SAE 10, SAE 20, etc.
Filtration	Cleanliness code 18/16/13
Standard housing materials	Aluminum or steel
Weight cartridge only	0,22 kg (0.48 lbs)
Seal kit	565803 Buna–N 566086 Viton® Viton is a registered trademark of E.I. DuPont

Pressure drop curves

Cartridge only

A – RCV3 10* P 0 00 210
B – RCV3 10* P 0 00 040
C – RCV3 10* P 0 00 003

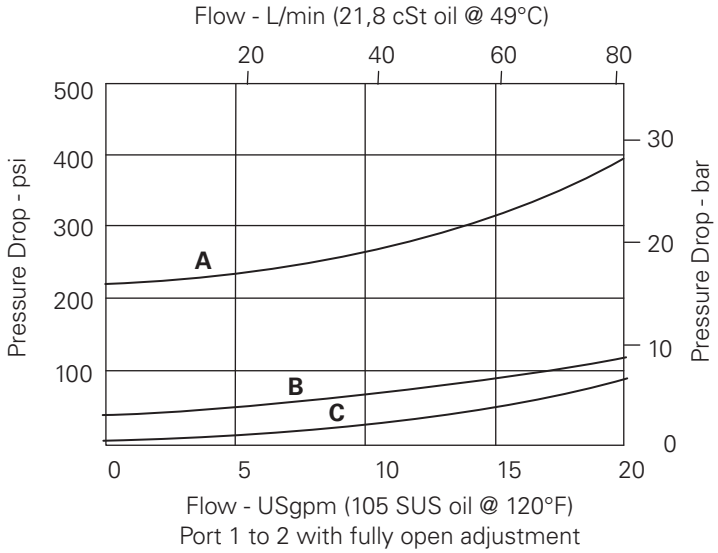

Where measurements are critical request certified drawings. We reserve the right to change specifications without notice.

RCV3-10 - Check valve

Restrictive check valve
76 L/min (20 USgpm) • 350 bar (5000 psi)

RCV3	10	*	P	*	**	***	00
1	2	3	4	5	6	7	8

1 Function

RCV3 - Check valve with stroke limiter (Restrictive check valve)

2 Size

10 - 10 size

3 Seal

N - Buna-N
V - Viton®

4 Style

P - Poppet

5 Block material

0 - No housing
A - Aluminum
S - Steel

7 Free flow cracking pressure

003 - 0,21 bar (3 psi) (Anti-cavitation)
010 - 0,69 bar (10 psi) (Anti-cavitation)
020 - 1,38 bar (20 psi)
040 - 2,76 bar (40 psi)
065 - 4,48 bar (65 psi)
100 - 6,90 bar (100 psi)
180 - 12,4 bar (180 psi)
210 - 14,5 bar (210 psi)

6 Port size

Code	Port size	Housing number		
		Aluminum light duty	Aluminum fatigue rated	Steel fatigue rated
3B	3/8" BSPP	02-175462	–	–
6T	SAE 6	566151	–	02-175100
8T	SAE 8	–	–	02-175101
2G	1/4" BSPP	–	876702	02-175102
3G	3/8" BSPP	–	876703	02-175103
6H	SAE 6	–	876700	–
8H	SAE 8	–	876701	–

See section J for housing details.

8 Special features

00 - None
(Only required if valve has special features - omitted if "00")

Dimensions

mm (inch)

Torque cartridge in housing

A - 47-54 Nm (35-40 ft. lbs)
S - 68-75 Nm (50-55 ft. lbs)

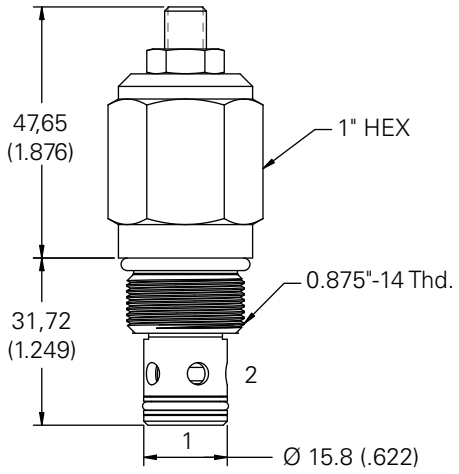

⚠ Aluminum housings can be used for pressures up to 210 bar (3000 psi) Steel housings must be used for operating pressures above 210 bar (3000 psi).

G

Where measurements are critical request certified drawings. We reserve the right to change specifications without notice.

CV6-16 - Check valve

Direct acting, poppet type with orifice
151 L/min (40 USgpm) • 210 bar (3000) psi

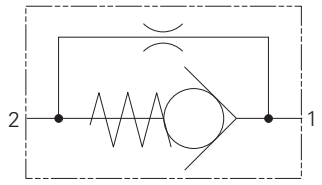

Operation

The poppet remains on its seat until the pressure drop across the orifice overcomes the spring force over the seat area. Full flow will then take place from port 1 to 2. Flow from port 2 to 1 will be restricted by the orifice.

Features

Hardened and ground working parts extend service life. Robust design with a 210 bar (3000 psi) max pressure rating. Compact simple solution in a single cartridge.

Sectional view

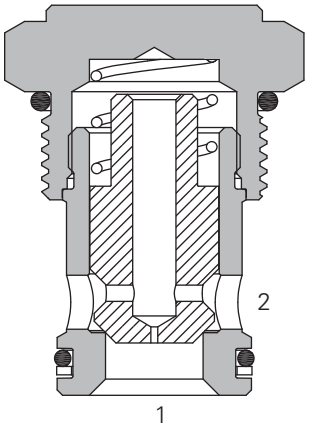

Performance data

Ratings and specifications

Performance data is typical with fluid at 21,8 cST (105 SUS) and 49°C (120°F)	
Typical application pressure (all ports)	210 bar (3000 psi)
Cartridge fatigue pressure (infinite life)	210 bar (3000 psi)
Rated flow	151 L/min (40 USgpm)
Free flow cracking pressure @ 1 L/min (0.25 USgpm)	**005** - 0,21 bar (3 psi) **020** - 1,34 bar (20 psi) **030** - 2,07 bar (30 psi) **040** - 2.76 bar (40 psi) **050** - 3,45 bar (50 psi) **100** - 6.9 bar (100 psi)
Orifice size range	0.015 to 0.125" (0.381 - 3.175 mm)
Temperature range	–40° to 120°C (–40° to 248°F)
Cavity	C-16-2
Fluids	All general purpose hydraulic fluids such as MIL - H-5606, SAE 10, SAE 20, etc.
Filtration	Cleanliness code 18/**16/13**
Standard housing material	Aluminum
Weight, cartridge only	0,26 kg (0.58 lbs.)
Seal kit	565810 (Buna-N) 889609 (Viton®)

Viton is a registered trademark of E.I. DuPont

Description

This is a poppet type screw-in cartridge check valve with a by-pass orifice. This will allow free flow into an actuator while restricting the flow out of it.

Pressure drop

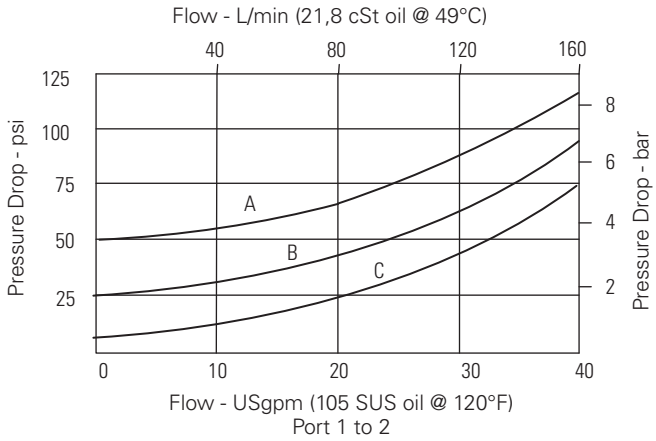

A – CV6 16*P 0000 050 00
B – CV6 16*P 0000 020 00
C – CV6 16*P 0000 005 00

Where measurements are critical request certified drawings. We reserve the right to change specifications without notice.

CV6-16 - Check valve

Direct acting, poppet type with orifice
151 L/min (40 USgpm) • 210 bar (3000) psi

Model code

CV6 – 16 * – P – * * – *** – *** – 00**

1 2 3 4 5 6 7 8 9

1 Function
CV6 - Check valve with bypass orifice

2 Size
16 - 16 size

3 Seal material
N - Buna-N
V - Viton

4 Style
P - Poppet

5 Valve housing material
0 - No housing
A - Aluminum

6 Port size
000 - Cartridge only

7 Free flow cracking pressure
005 - 0,21 bar (5 psi) (Anti-cavitation)
020 - 1,34 bar (20 psi) (Anti-cavitation)
030 - 2,07 bar (30 psi)
040 - 2,76 bar (40 psi)
050 - 3,45 bar (50 psi)
100 - 6,90 bar (100 psi)

Code	Port size	Housing number	
		Aluminum light duty	Aluminum fatigue rated
6B	3/4" BSPP	02-175463	–
12T	SAE 12	566149	–
4G	1/2" BSPP	–	876716
6G	3/4" BSPP	–	876718
10H	SAE 10	–	876717
12H	SAE 12	–	566113

8 Orifice size
Specify in thousandths of an inch
Ø - 0.125 max
Ø - 0.015 min

9 Special features
00 - None
(Only required if valve has special features, omitted if "00")

Dimensions

mm (inch)

Note: Torque cartridge in aluminum housing 108-122 Nm (80-90 ft. lbs).

Cartridge drawing

Basic code
CV6-16

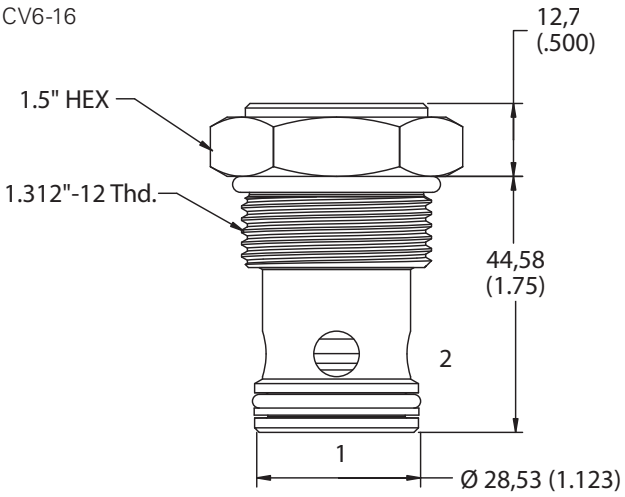

Installation drawing

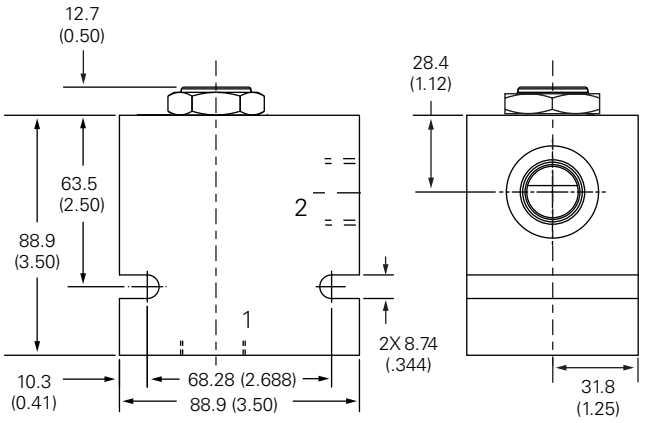

G

Where measurements are critical request certified drawings. We reserve the right to change specifications without notice.

RCV3-10 - Check valve

Restrictive check valve
76 L/min (20 USgpm) • 350 bar (5000) psi

Description

The RCV3-10-P is a poppet type, screw-in cartridge check valve with stroke limiter.

Operation

This valve remains closed until the spring bias is reached at port 1 at which time the poppet lifts off the seat and allows flow from port 1 to port 2. The effective orifice in the free flow direction is adjustable.

Functional symbol

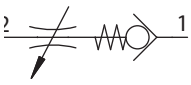

Sectional view

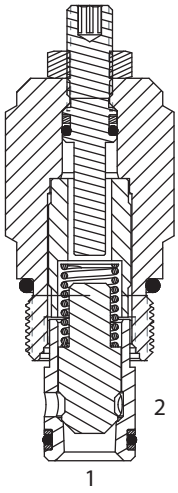

Ratings and specifications

Performance data is typical with fluid at 21,8 cSt (105 SUS) and 49°C (120°F)	
Typical application pressure (all ports)	350 bar (5000 psi)
Cartridge fatigue pressure (infinite life)	350 bar (5000 psi)
Rated flow	76 L/min (20 USgpm
Free flow cracking pressure @1 L/min (0.25 USgpm)	003 – 0,21 bar (3 psi) 010 – 0,69 bar (10 psi) 020 –1,38 bar (20 psi) 040 – 2,76 bar (40 psi) 065 – 4,48 bar (65 psi) 100 – 6,90 bar (100 psi) 180 –12,40 bar (180 psi) 210 –14,50 bar (210 psi)
Internal leakage, Port 2 to 1	5 drops/min maximum @ 210 bar (3000 psi)
Temperature range	-40° to 120°C (-40° to 248°F)
Cavity	C–10–2
Fluids	All general purpose hydraulic fluids such as MIL–H–5606, SAE 10, SAE 20, etc.
Filtration	Cleanliness code 18/16/13
Standard housing materials	Aluminum or steel
Weight cartridge only	0,22 kg (0.48 lbs)
Seal kit	565803 Buna–N 566086 Viton® Viton is a registered trademark of E.I. DuPont

Pressure drop curves

Cartridge only

A – RCV3 10* P 0 00 210
B – RCV3 10* P 0 00 040
C – RCV3 10* P 0 00 003

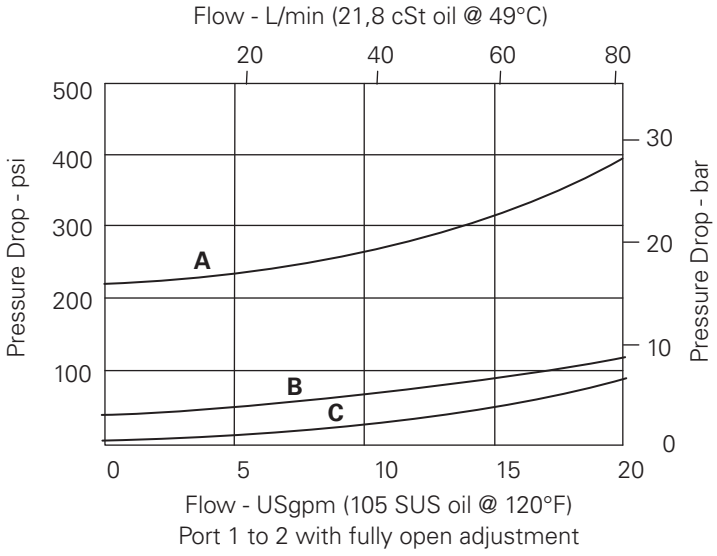

Where measurements are critical request certified drawings. We reserve the right to change specifications without notice.

RCV3-10 - Check valve

Restrictive check valve
76 L/min (20 USgpm) • 350 bar (5000) psi

RCV3	10	*	P	*	**	***	00
1	2	3	4	5	6	7	8

1 Function

RCV3 - Check valve with stroke limiter (Restrictive check valve)

2 Size

10 - 10 size

3 Seals

N - Buna-N
V - Viton®

4 Style

P - Poppet

5 Block material

0 - No housing
A - Aluminum
S - Steel

7 Free flow cracking pressure

003 - 0,21 bar (3 psi) (Anti-cavitation)
010 - 0,69 bar (10 psi) (Anti-cavitation)
020 - 1,38 bar (20 psi)
040 - 2,76 bar (40 psi)
065 - 4,48 bar (65 psi)
100 - 6,90 bar (100 psi)
180 - 12,4 bar (180 psi)
210 - 14,5 bar (210 psi)

6 Port size

Code	Port size	Housing number		
		Aluminum light duty	Aluminum fatigue rated	Steel fatigue rated
3B	3/8" BSPP	02-175462	–	–
6T	SAE 6	566151	–	02-175100
8T	SAE 8	–	–	02-175101
2G	1/4" BSPP	–	876702	02-175102
3G	3/8" BSPP	–	876703	02-175103
6H	SAE 6	–	876700	–
8H	SAE 8	–	876701	–

8 Special features

00 - None
(Only required if valve has special features - omitted if "00")

Dimensions

mm (inch)

Torque cartridge in housing

A - 47-54 Nm (35-40 ft. lbs)
S - 68-75 Nm (50-55 ft. lbs)

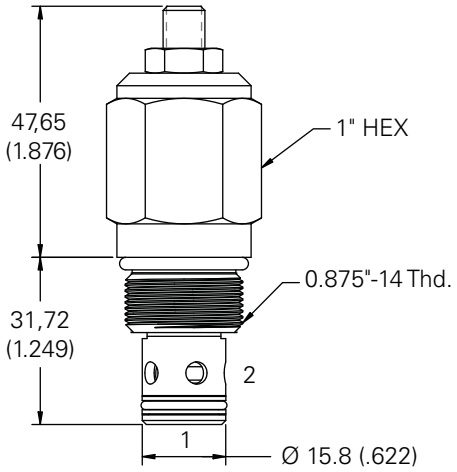

⚠ Aluminum housings can be used for pressures up to 210 bar (3000 psi) Steel housings must be used for operating pressures above 210 bar (3000 psi).

G

Where measurements are critical request certified drawings. We reserve the right to change specifications without notice.

SPC2-8 - Check valve

Pilot-to-open, poppet type
19 L/min (5 USgpm) • 240 bar (3500 psi)

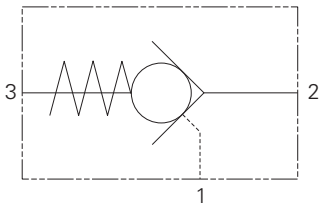

Operation

Pressure on the valve port 2 causes the poppet to lift against the spring force, allowing the flow to the cylinder port 3. Reverse flow is prevented by the poppet reseating.

Pressure applied to the pilot port 1 will overcome the cylinder port pressure and lift the poppet from its seat, allowing flow from the cylinder to valve port.

Features

Hardened and ground poppet gives excellent flow capability for valve size, positive sealing and long working life. Cartridge construction allows installation in actuators, manifold blocks and Hydraulic Integrated Circuits. Fits the same cavity as the overcenter valves of a similar size.

Sectional view

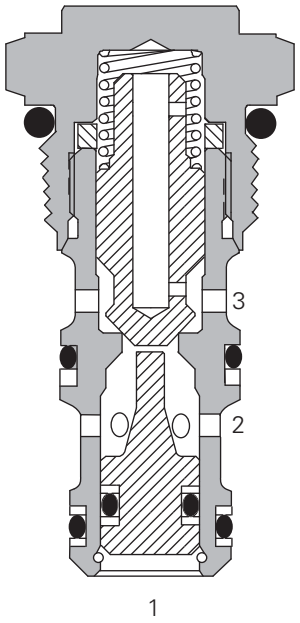

Performance data

Ratings and specifications

Performance data is typical with fluid at 21,8 cST (105 SUS) and 49°C (120°F)	
Typical application pressure (all ports)	240 bar (3500 psi)
Cartridge fatigue pressure (infinite life)	240 bar (3500 psi)
Rated flow	19 L/min (5 USgpm)
Pilot ratio	3:1
Cracking pressure	15 - 1,0 bar (15 psi) 35 - 2,4 bar (35 psi) 65 - 4,5 bar (65 psi)
Internal leakage (all leak rates @ 240 bar (3500 psi) Port 3 to 2 Port 2 to 1 unsealed piston* *Unsealed piston only supplied with 15 psi spring option	 5 drops/min. maximum at 240 bar (3500 psi) 140 cc/min. maximum, zero leakage with sealed piston
Temperature range	–40° to 120°C (–40° to 248°F)
Cavity	C-8-3
Fluids	All general purpose hydraulic fluids such as MIL - H-5606, SAE 10, SAE 20, etc
Recommended filtration	Cleanliness code 18/**16/13**
Standard housing materials	Aluminum or steel
Weight, cartridge only	0,07 kg (0.15 lbs.)
Seal kit	02-173326 (Buna-N) 02-173327 (Viton®)

Viton is a registered trademark of E.I. DuPont

Description

Pilot check valves allow flow to pass in one direction, with a low pressure drop, then prevent reverse flow until pilot pressure is applied. There are many applications for this valve type, the most common being to lock and hold a cylinder, or another hydraulic actuator, in position.

These valves are ideally suited for fitting directly into a cylinder, giving economy of installation, direct control of cylinder movement and ease of servicing.

Pressure drop

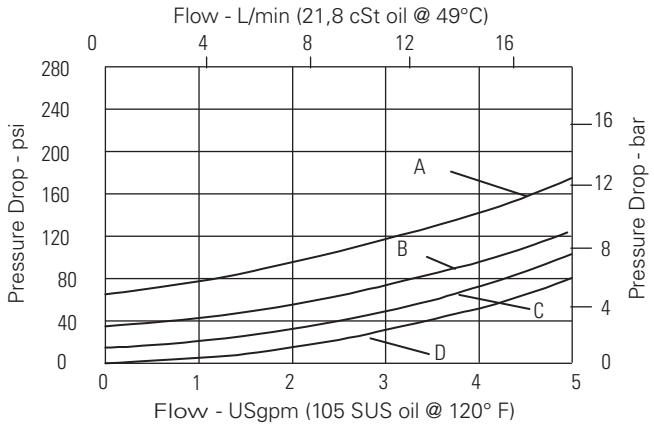

A – CV6 16*P 0000 050 00
B – CV6 16*P 0000 020 00
C – CV6 16*P 0000 005 00

Where measurements are critical request certified drawings. We reserve the right to change specifications without notice.

SPC2-8 - Check valve

Pilot-to-open, poppet type
19 L/min (5 USgpm) • 240 bar (3500 psi)

Model code

SPC2 – 8 (X) – P – (*) ** – ** – 00

1 2 3 4 5 6 7 8

1 Basic code
SPC2 - Single pilot check valve

2 Size
8 - 8 size

3 Seals
Blank - Buna-N
V - Viton
U - Buna-N with no piston seals
W - Viton with no piston seals

4 Style
P - Poppet

5 Valve body material
Omit for cartridge only
A - Aluminum
S - Steel

6 Port size

Code	Port size	Housing number	
		Aluminum fatigue rated	Steel fatigue rated
4T	SAE 4	02-160741	02-160745
6T	SAE 6	02-160742	02-160744
2G	1/4" BSPP	02-160739	02-160743
3G	3/8" BSPP	02-160740	02-160746

7 Cracking pressure
15 - 1,0 bar (15 psi)
35 - 2,4 bar (35 psi)
65 - 4,5 bar (65 psi)

8 Special features
00 - None
(Only required if valve has special features, omitted if "00")
SS - 316 Stainless Steel external components

Dimensions
mm (inch)

Note: Torque cartridge in aluminum or steel housing to 34-41 Nm (25-30 ft lbs).

Cartridge drawing
Basic code
SPC2-8

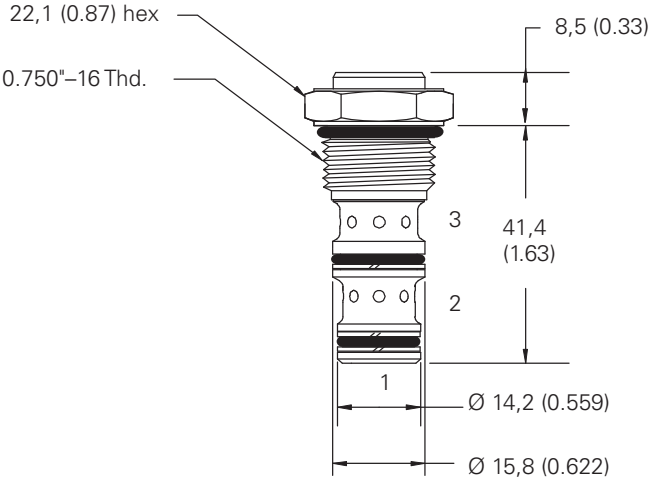

Installation drawing (Steel)

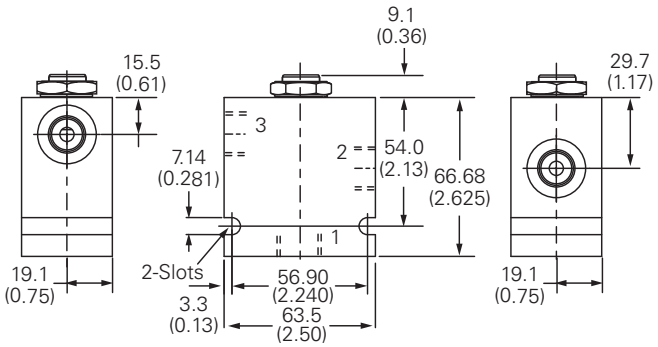

⚠ Warning
Aluminum housings can be used for pressures up to 210 bar (3000 psi). Steel housings must be used for operating pressures above 210 bar (3000 psi).

Where measurements are critical request certified drawings. We reserve the right to change specifications without notice.

SPC2-10 - Check valve

Pilot-to-open, poppet type
23 L/min (6 USgpm) • 210 bar (3000 psi)

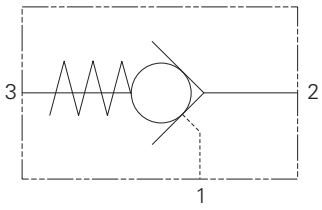

Operation

Pressure on the valve port 2 causes the poppet to lift against the spring force, allowing the flow to the cylinder port 3. Reverse flow is prevented by the poppet reseating.

Pressure applied to the pilot port 1 will overcome the cylinder port pressure and lift the poppet from its seat, allowing flow from the cylinder to valve port.

Features

Hardened and ground poppet gives excellent flow capability for valve size, positive sealing and long working life. Cartridge construction allows installation in actuators, manifold blocks and Hydraulic Integrated Circuits. Fits the same cavity as the overcenter valves of a similar size.

Sectional view

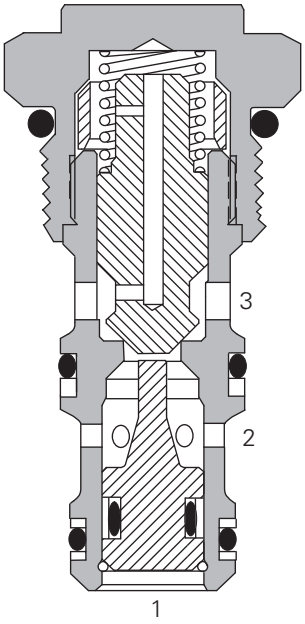

Description

Pilot check valves allow flow to pass in one direction, with a low pressure drop, then prevent reverse flow until pilot pressure is applied. There are many applications for this valve type, the most common being to lock and hold a cylinder, or another hydraulic actuator, in position.

These valves are ideally suited for fitting directly into a cylinder, giving economy of installation, direct control of cylinder movement and ease of servicing.

⚠ Warning

Do not use Single Pilot Check Valves in load holding applications where either overrunning loads are possible or load release speed is critical. Failure to observe these guidelines may result in bodily injury or damage to equipment.

Performance data

Ratings and specifications

Performance data is typical with fluid at 21,8 cST (105 SUS) and 49°C (120°F)		
Typical application pressure (all ports)		210 bar (3000 psi)
Cartridge fatigue pressure (infinite life)		210 bar (3000 psi)
Rated flow		23 L/min (6 USgpm)
Pilot ratio		4:1
Cracking pressure @ 1 L/min (0.25 USgpm)		025 - 1,72 bar (25 psi) 050 - 3,45 bar (35 psi) 100 - 6,90 bar (100 psi)
Internal leakage	Port 3 to 2	5 drops/min. maximum at 210 bar (3000 psi)
Temperature range		–40° to 120°C (–40° to 248°F)
Cavity		C-10-3
Fluids		All general purpose hydraulic fluids such as MIL - H-5606, SAE 10, SAE 20, etc.
Filtration		Cleanliness code 18/**16/13**
Standard housing material		Aluminum
Weight, cartridge only		0,08 kg (0.18 lbs.)
Seal kit (check valve)		02-153267 (Buna-N) 02-173666 (Viton®)

Viton is a registered trademark of E.I. DuPont

Pressure drop

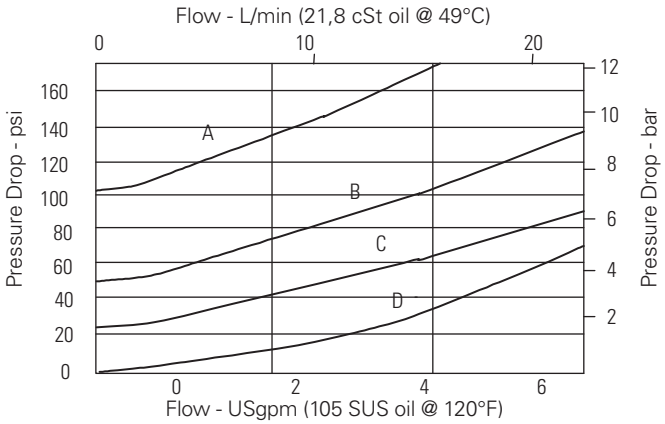

A – SPC2-10-P-0-100
B – SPC2-10-P-0-50
C – SPC2-10-P-0-25
D - Port 3 to 2 (piloted open)

Where measurements are critical request certified drawings. We reserve the right to change specifications without notice.

SPC2-10 - Check valve

Pilot-to-open, poppet type
23 L/min (6 USgpm) • 210 bar (3000 psi)

Model code

SPC2 – 10 (X) – P – ** – * – 00**

1 2 3 4 5 6 7

1 Function

SPC2 - Single pilot check valve

2 Size

10 - 10 size

3 Seal material

Blank - Buna-N
V - Viton
U - Buna-N with no piston seals
W - Viton with no piston seals

4 Style

P - Poppet

5 Port size

Code	Port size	Housing number	
		Aluminum light duty	Aluminum fatigue rated
0	Cartridge only		
3B	3/8" BSPP	02-173358	–
6T	SAE 6	566162	–
2G	1/4" BSPP	–	876705
3G	3/8" BSPP	–	876714
6H	SAE 6	–	876704
8H	SAE 8	–	876711

See section J for housing details.

6 Free flow cracking pressure

25 - 1,72 bar (25 psi)
50 - 3,45 bar (50 psi)
100 - 6,90 bar (100 psi)

7 Special features

00 - None
(Only required if valve has special features, omitted if "00")
SS - 316 Stainless Steel external components

Dimensions

mm (inch)

Torque cartridge housing

A - 47-54 Nm (35-40 ft. lbs).
B - 68-70 Nm (50-55 ft. lbs).

Cartridge drawing

Basic code
SPC2-10

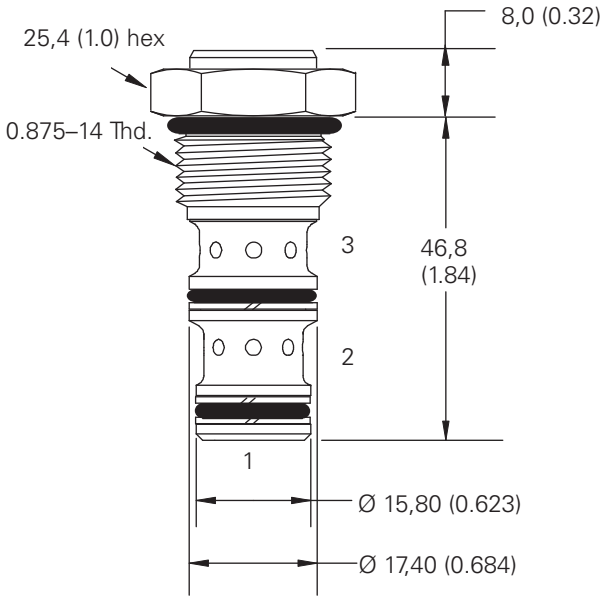

Installation drawing

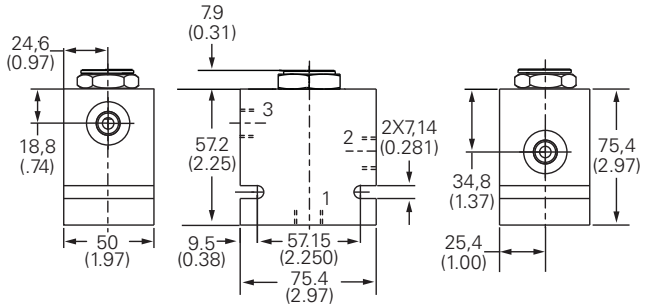

⚠ Warning

Aluminum housings can be used for pressures up to 210 bar (3000 psi). Steel housings must be used for operating pressures above 210 bar (3000 psi).

G

Where measurements are critical request certified drawings. We reserve the right to change specifications without notice.

4CK30 - Check valve

Pilot-to-open, poppet type
30 L/min (8 USgpm) • 350 Bar (5000 psi)

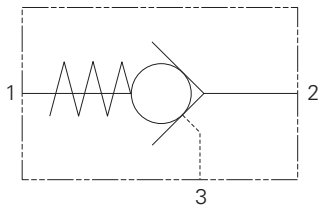

Operation

Pressure on the valve port 2 causes the poppet to lift against the spring force, allowing the flow to the cylinder port 1. Reverse flow is prevented by the poppet reseating. Pressure applied to the pilot port 3 will overcome the cylinder port pressure and lift the poppet from its seat, allowing flow from the cylinder to valve port.

Features

Hardened and ground poppet gives excellent flow capability for valve size, positive sealing and long working life. Cartridge construction allows installation in actuators, manifold blocks and Hydraulic Integrated Circuits. Fits the same cavity as the overcenter valves of a similar size.

Sectional view

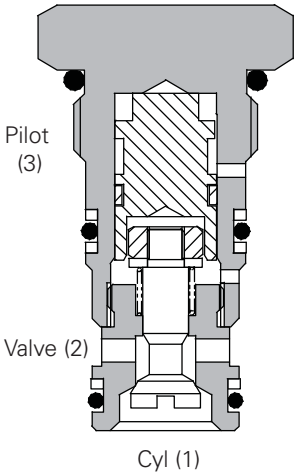

Description

Pilot check valves allow flow to pass in one direction, with a low pressure drop, then prevent reverse flow until pilot pressure is applied. There are many applications for this valve type, the most common being to lock and hold a cylinder, or another hydraulic actuator, in position.

These valves are ideally suited for fitting directly into a cylinder, giving economy of installation, direct control of cylinder movement and ease of servicing.

Performance data

Ratings and specifications

Figures based on: Oil Temp = 40°C Viscosity = 32 cSt (150 SUS)	
Rated flow	30 L/min (8 USgpm)
Max setting	350 bar (5000 psi)
Pilot ratio	3:1
Cartridge material	Working parts hardened & ground steel. Electroless zinc plated body.
Standard housing material	Standard aluminium (up to 210 bar) Add suffix "377" for steel option
Mounting position	Unrestricted
Cavity number	A6610 (See section M)
Torque cartridge into cavity	45 Nm (33 lbs ft)
Weight	4CK30 0.08 kg (0.18 lbs) 4CK35 0.34 kg (0.75 lbs) 4CKK35 0.76 kg (1.67 lbs)
Seal kit number	SK430 (Nitrile) SK430V (Viton®)
Recommended filtration level	BS5540/4 Class 18/13 (25 micron nominal)
Operating temperature	-30°C to +90°C (-22° to +194°F)
Leakage	0.3 milliliters/min nominal (5 dpm)
Nominal viscosity range	5 to 500 cSt

Viton is a registered trademark of E.I. DuPont

Pressure drop

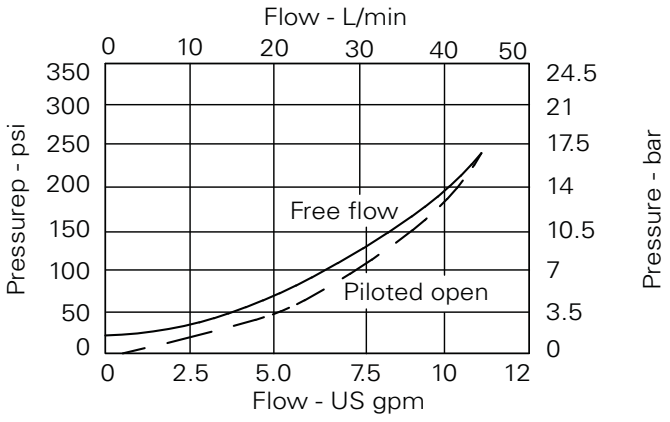

Where measurements are critical request certified drawings. We reserve the right to change specifications without notice.

4CK30 - Check valve

Pilot-to-open, poppet type
30 L/min (8 USgpm) • 350 Bar (5000 psi)

Model code

4CK** – 1 3W – S 3**

1 2 3 4 5

1 Basic code

4CK30 - Cartridge Only
4CK35 - Cartridge and Body
4CKK34 - Cartridges and Dual Body

2 Pilot port size

1 - Internal

3 Port sizes

Code	Port size	Housing number - body only			
		Aluminium single	Steel single	Aluminium double	Steel double
3W	3/8" BSP. 1/4" BSP Pilot Port	B6743	B12823	B6836	B13803
6T	3/8" SAE. 1/4" SAE Pilot Port	B10536		B10805	
8T	1/2" SAE. 1/4" SAE Pilot Port	B7884	84811	B30237	B11812

4 Seals

S -Nitrile (For use with most industrial hydraulic oils)
SV -Viton (For high temperature and most special fluid applications)

5 Optional pilot seal

Omit if not required

Dimensions

mm (inch)

Cartridge only

Basic code
4CK30

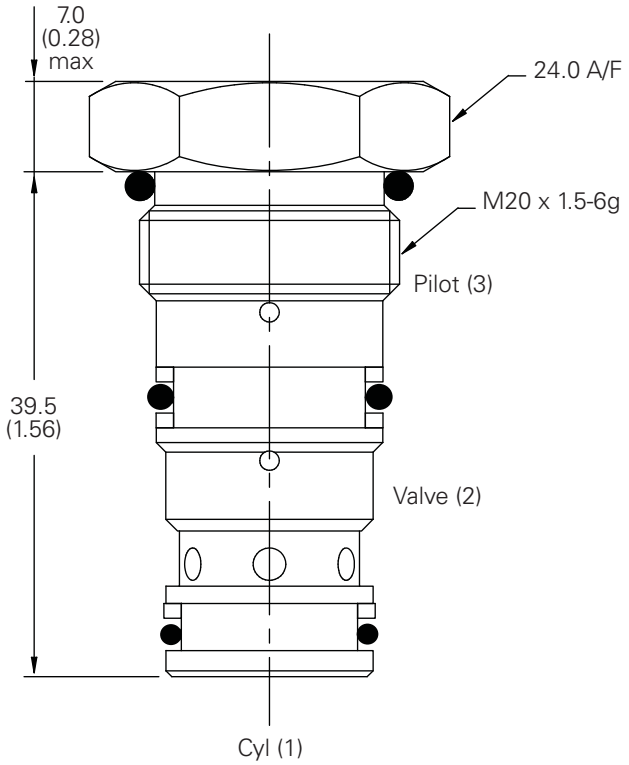

Note: For applications above 210 bar (3000 psi) please consult our technical department or use the steel body option.

Single valve

3/8", 1/2" Ports
Basic code 4CK35

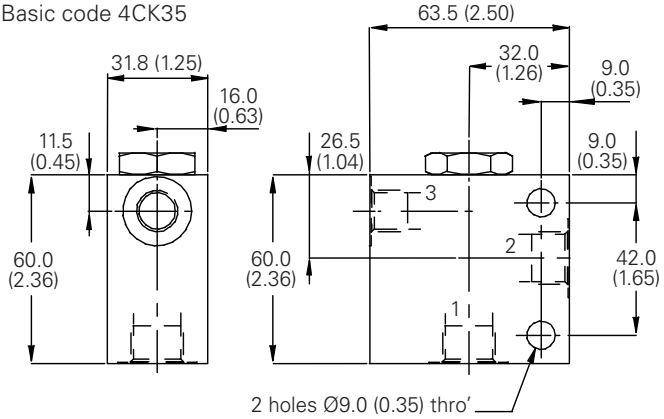

Dual valve

3/8", 1/2" Ports
Basic code 4CKK34
Internally cross piloted

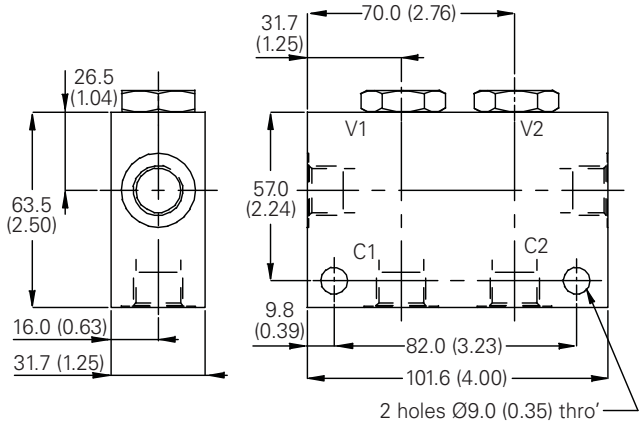

Where measurements are critical request certified drawings. We reserve the right to change specifications without notice.

4CK90 - Check valve

Pilot-to-open, poppet type
90 L/min (24 USgpm) • 350 bar (5000 psi)

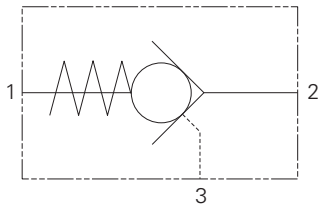

Operation

Pressure on the valve port 2 causes the poppet to lift against the spring force, allowing the flow to the cylinder port 1. Reverse flow is prevented by the poppet reseating. Pressure applied to the pilot port 3 will overcome the cylinder port pressure and lift the poppet from its seat, allowing flow from the cylinder to valve port.

Features

Hardened and ground poppet gives excellent flow capability for valve size, positive sealing and long working life. Cartridge construction allows installation in actuators, manifold blocks and Hydraulic Integrated Circuits. Fits the same cavity as the overcenter valves of a similar size.

Sectional view

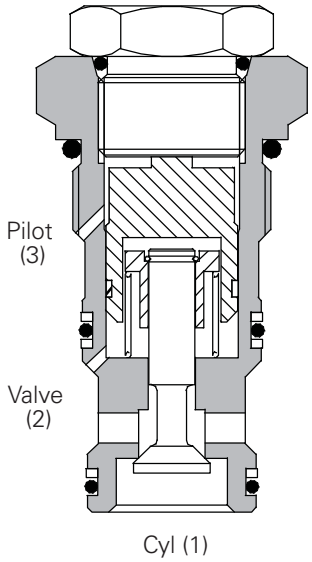

Performance data

Ratings and specifications

Figures based on: Oil Temp = 40° C Viscosity = 32 cSt (150 SUS)	
Rated flow	90 L/min (24 USgpm)
Max pressure	350 bar (5000 psi)
Pilot ratio	4:1
Cartridge material	Working parts hardened and ground steel. Electroless zinc plated body.
Standard housing material	Standard aluminium (up to 210 bar). Add suffix "377" for steel option.
Mounting position	Unrestricted
Cavity number	A12336 (See Section M)
Torque cartridge into cavity	90 Nm (66 lbs ft)
Weight	4CK90 0.27 kg (0.61 lbs) 4CK95 1.33 kg (2.90 lbs) 4CKK95 2.03 kg (4.51 lbs)
Seal kit number	SK832 (Nitrile) SK832V (Viton®)
Recommended filtration level	BS5540/4 Class 18/13 (25 micron nominal)
Operating temperature	-30°C to +90°C (-22° to +194°F)
Leakage	0.3 milliliters/min nominal (5 dpm)
Nominal viscosity range	5 to 500 cSt

Viton is a registered trademark of E.I. DuPont

Description

Pilot check valves allow flow to pass in one direction, with a low pressure drop, then prevent reverse flow until pilot pressure is applied. There are many applications for this valve type, the most common being to lock and hold a cylinder, or another hydraulic actuator, in position.

These valves are ideally suited for fitting directly into a cylinder, giving economy of installation, direct control of cylinder movement and ease of servicing.

Pressure drop

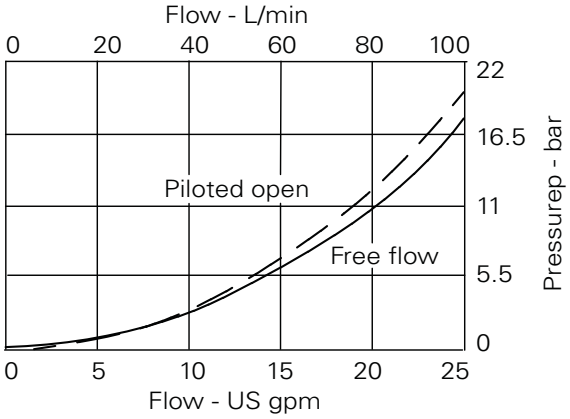

Where measurements are critical request certified drawings. We reserve the right to change specifications without notice.

4CK90 - Check valve

Pilot-to-open, poppet type
90 L/min (24 USgpm) • 350 bar (5000 psi)

Model code

4CK* – 1 4W – S 3**

1 2 3 4 5

1 Basic code

4CK90 - Cartridge Only
4CK95 - Cartridge and Body
4CKK95 - Cartridges and Dual Body

2 Pilot port sizes

1 - Internal

3 Port sizes

Code	Port size	Housing number - body valves only			
		Aluminium single	Steel single	Aluminium double	Steel double
4W	1/2" BSP 1/4" BSP Pilot Port	B13625	B13626	C13627	C13628
8T	1/2" SAE 1/4" SAE Pilot Port	B10806	B10922	C10807	C11561

4 Seals

S - Nitrile (For use with most industrial hydraulic oils)

SV - Viton (For high temperature and most special fluid applications)

5 Optional pilot seal

Omit if not required

Dimensions

mm (inch)

Cartridge only

Basic code
4CK90

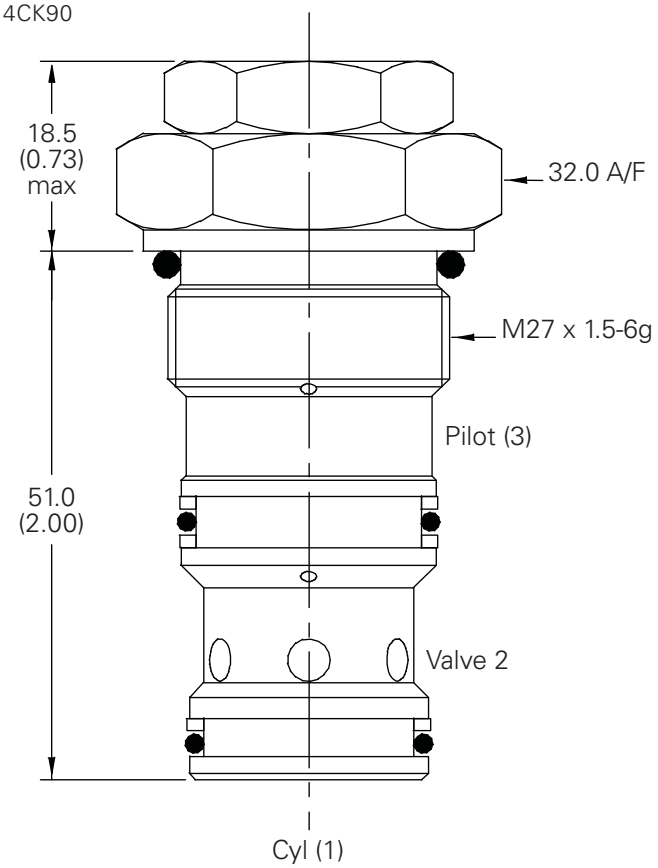

Complete valve

1/2" Ports
Basic code
4CK95

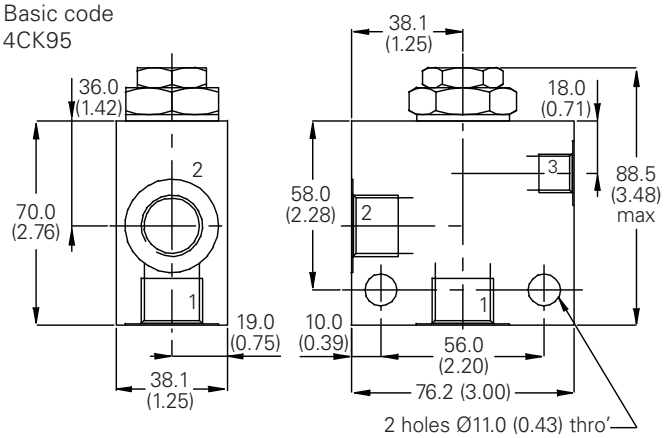

Dual valve

1/2" Ports
Basic code 4CKK95
Internally Cross Piloted

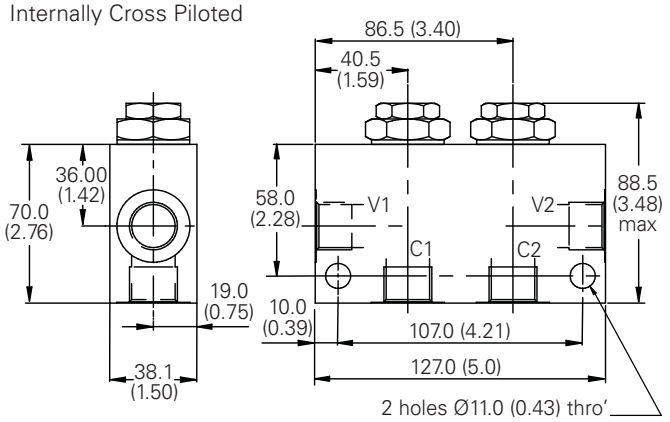

Note: For applications above 210 bar (3000 psi) please consult our technical department.

Where measurements are critical request certified drawings. We reserve the right to change specifications without notice.

4CKD90 - Check valve

Pilot-to-open, poppet type with decompression stage
90 L/min (24 USgpm) • 420 bar (6000 psi)

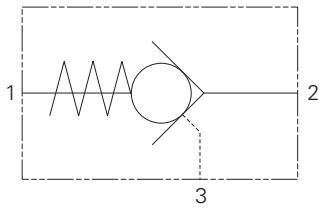

Sectional view

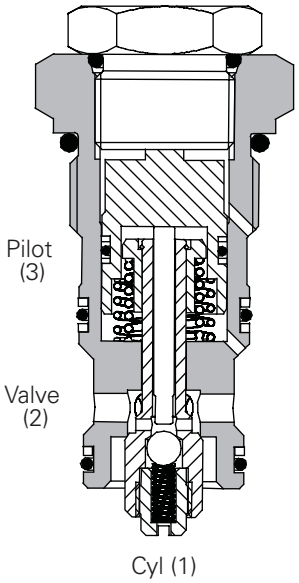

Description

A decompression pilot check can be used in most applications that use a standard pilot operated check. Free flow in one direction and load holding in the other. The decompression feature allows locked-in pressure to decay in a controlled fashion, reducing hydraulic noise and instability caused by the rapid loss of energy from the actuator. The valve is effective in clamping circuits and when used with intensifiers or when there are high load induced pressures.

Operation

The ball and poppet are held onto their respective seats by spring force, ensuring positive sealing as long as the pressure on port 1 is equal to or greater than the pressure on port 2. As soon as the pressure on port 2 exceeds the pressure on port 1 plus the spring force, the valve opens from 2 to 1. In order to pass flow in the reverse direction, pilot pressure must be applied to port 3. Once this reaches the required level, the pilot piston acting on the pin in the Center of the poppet lifts the ball off its seat, enabling the fluid to decompress and thus reducing the load pressure acting on port 1. As the load pressure decreases, the pilot pressure required to open the main stage also decreases and when the correct pilot pressure is reached, the main stage poppet is lifted off its seat by the advancing pilot piston, allowing full flow from 1 to 2.

When calculating the pilot pressure, it must be remembered that any back pressure on port 2 will cause this to increase on a 1:1 ratio.

Features

Decompression stage reduces hydraulic noise on rapid loss of pressure. Precision ground ball and hardened and ground poppet ensure positive sealing and long, trouble-free working life.

This valve is directly interchangeable with the 4CK90 check valve and 1CE*90 series overcenter valve.

Performance data

Ratings and specifications

Figures based on: Oil Temp = 40° C Viscosity = 32 cSt (150 SUS)	
Rated flow	90 L/min (24 USgpm)
Max pressure	Cylinder Port 1 420 bar (6000 psi) Ports 2 & 3 350 bar (5000 psi)
Pilot ratio	25:1 decompression stage 3: main stage
Cartridge material	Working parts hardened and ground steel. Electroless nickel plated body.
Standard Housing Material	Standard aluminium (up to 210 bar*). Add suffix "377" for steel option.
Mounting position	Unrestricted
Cavity number	A12336
Torque cartridge into cavity	90 Nm (66 lbs ft)
Weight	0.243 kg (0.54 lbs)
Seal kit number	SK986 (Nitrile) SK986V (Viton®)
Recommended filtration level	BS5540/4 Class 18/13 (25 micron nominal)
Operating temperature	-30°C to +90°C (-22° to +194°F)
Leakage	0.3 milliliters/min nominal (5 dpm)
Nominal viscosity range	5 to 500 cSt

Viton is a registered trademark of E.I. DuPont

Pressure drop

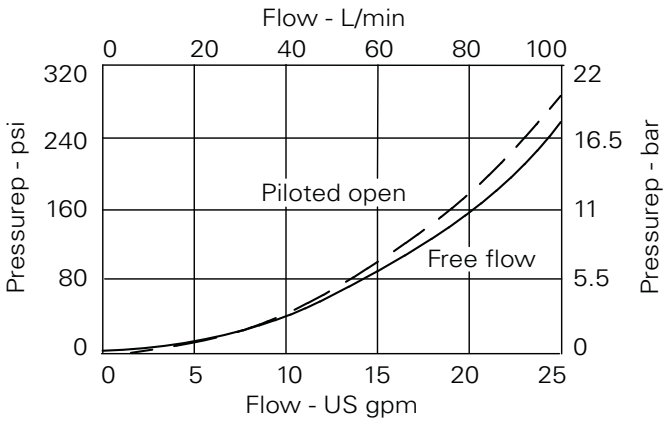

Where measurements are critical request certified drawings. We reserve the right to change specifications without notice.

4CKD90 - Check valve

Pilot-to-open, poppet type with decompression stage
90 L/min (24 USgpm) • 420 bar (6000 psi)

Model code

4CK* – 1 4W – S 3**

1 2 3 4 5

1 Basic code

4CKD90 - Cartridge only
4CKD95 - Cartridge and Body
4CKKD95 - Cartridges and Dual Body

2 Pilot port sizes

1 - Internal

3 Port sizes

Code	Port size	Housing number - body only			
		Aluminium single	Steel single	Aluminium double	Steel double
4W	1/2" BSP 1/4" BSP Pilot Port	B13625	B13626	C13627	C13628
8T	1/2" SAE 1/4" SAE Pilot Port	B10806	B10922	C10807	C11561

4 Seals

S - Nitrile (For use with most industrial hydraulic oils)

SV - Viton (For high temperature and most special fluid applications)

5 Optional pilot seal

Omit if not required

Dimensions

mm (inch)

Cartridge only

Basic code
4CKD90

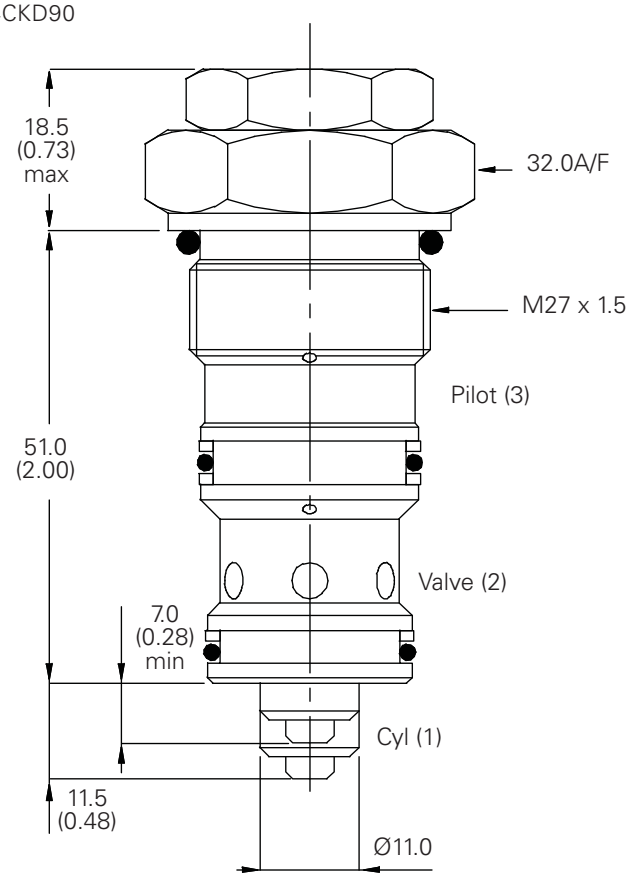

Note: For applications above 210 bar (3000 psi) please consult our technical department or use the steel body option.

Note: Ensure cavity clears nose end of cartridge.

Complete valve

1/2" Ports
Basic code 4CKD95

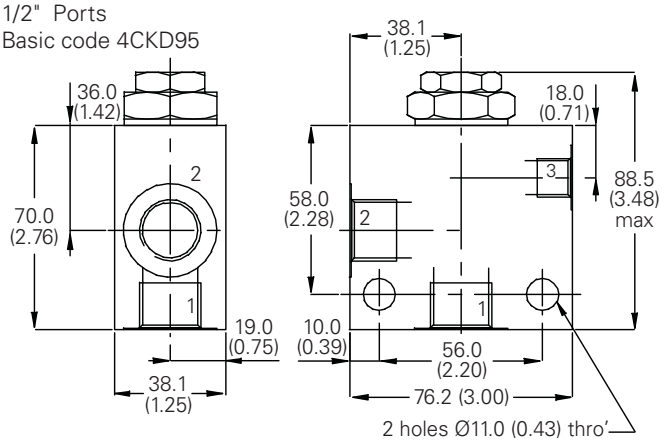

Complete valve

1/2" Ports
Basic code 4CKKD95
Internally cross piloted

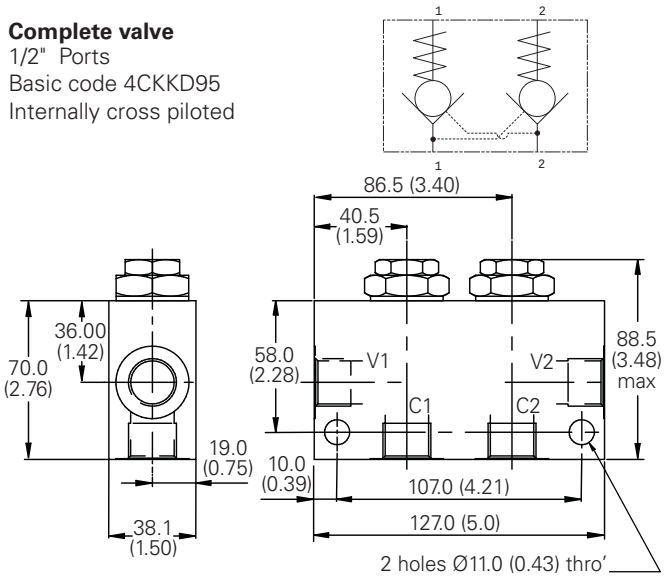

Where measurements are critical request certified drawings. We reserve the right to change specifications without notice.

4CK120 - Check valve

Pilot-to-open, poppet type
120 L/min (32 USgpm) • 350 bar (5000 psi)

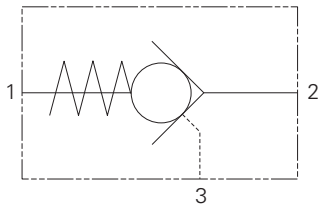

Operation

Pressure on the valve port 2 causes the poppet to lift against the spring force, allowing the flow to the cylinder port 1. Reverse flow is prevented by the poppet reseating. Pressure applied to the pilot port 3 will overcome the cylinder port pressure and lift the poppet from its seat, allowing flow from the cylinder to valve port.

Features

Hardened and ground poppet gives excellent flow capability for valve size, positive sealing and long working life. Cartridge construction allows installation in actuators, manifold blocks and Hydraulic Integrated Circuits. Fits the same cavity as the overcenter valves of a similar size.

Sectional view

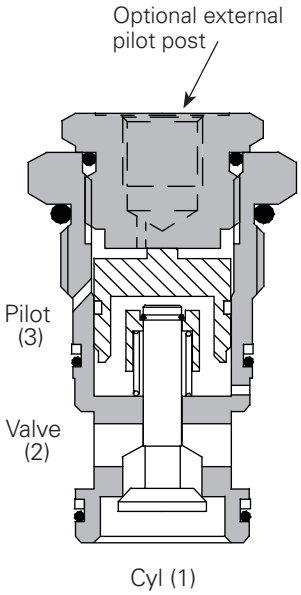

Performance data

Ratings and specifications

Figures based on: Oil Temp = 40° C Viscosity = 32 cSt (150 SUS)	
Rated flow	120 L/min (32 USgpm)
Max pressure	350 bar (5000 psi)
Pilot ratio	3:1
Cartridge material	Working parts hardened and ground steel. Zinc plated body.
Standard housing material	Standard aluminium (up to 210 bar). Add suffix "377" for steel option.
Mounting position	Unrestricted
Cavity number	A877 (See Section M)
Torque cartridge into cavity	100 Nm (74 lbs ft)
Weight	4CK120 0.28 kg (0.62 lbs) 4CK125 1.15 kg (2.54 lbs) 4CKK125 1.96 kg (4.32 lbs)
Seal kit number	SK381 (Nitrile) SK381V (Viton®)
Recommended filtration level	BS5540/4 Class 18/13 (25 micron nominal)
Operating temperature	-30°C to +90°C (-22° to +194°F)
Leakage	0.3 milliliters/min nominal (5 dpm)
Nominal viscosity range	5 to 500 cSt

Viton is a registered trademark of E.I. DuPont

Description

Pilot check valves allow flow to pass in one direction, with a low pressure drop, then prevent reverse flow until pilot pressure is applied. There are many applications for this valve type, the most common being to lock and hold a cylinder, or another hydraulic actuator, in position.

These valves are ideally suited for fitting directly into a cylinder, giving economy of installation, direct control of cylinder movement and ease of servicing.

Pressure drop

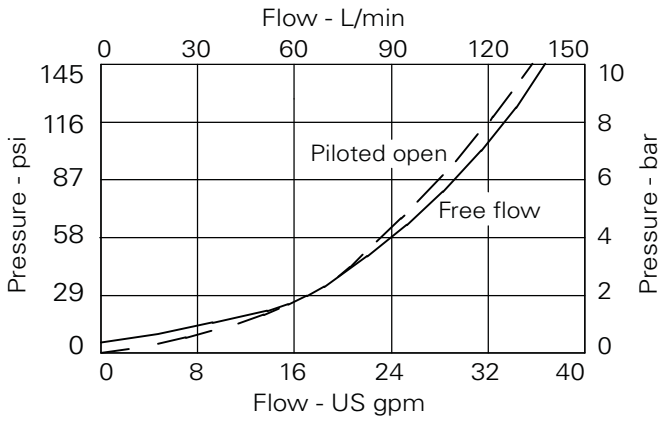

Where measurements are critical request certified drawings. We reserve the right to change specifications without notice.

4CK120 - Check valve

Pilot-to-open, poppet type
120 L/min (32 USgpm) • 350 bar (5000 psi)

Model code

4CK** – 1 6W – S 3**

1 2 3 4 5

1 Basic code

4CK120 - Cartridge Only
4CK125 - Cartridge and Body
4CKK125 - Cartridges and Dual Body

2 Pilot port sizes

Code	Port size
1	Internal
2W	1/4" BSP (External Pilot). Omit for bodied valves
4T	1/4" SAE (External Pilot). Omit for bodied valves

3 Port sizes - bodied valves only

Code	Port size	Housing number - body only			
		Aluminium single	**Steel single**	**Aluminium double**	**Steel double**
6W	3/4" BSP 1/4" BSP Pilot Port	B6898	B5544	C2543	C1200
12T	3/4" SAE 1/4" SAE Pilot Port	B8200		C10629	C16434
16T	1" SAE 1/4" SAE Pilot Port	B10708	B11814		

4 Seals

S - Nitrile (For use with most industrial hydraulic oils)
SV - Viton (For high temperature and mos special fluid applications)

5 Optional pilot seal

Omit if not required

Dimensions

mm (inch)

Cartridge only

Basic code
4CK120

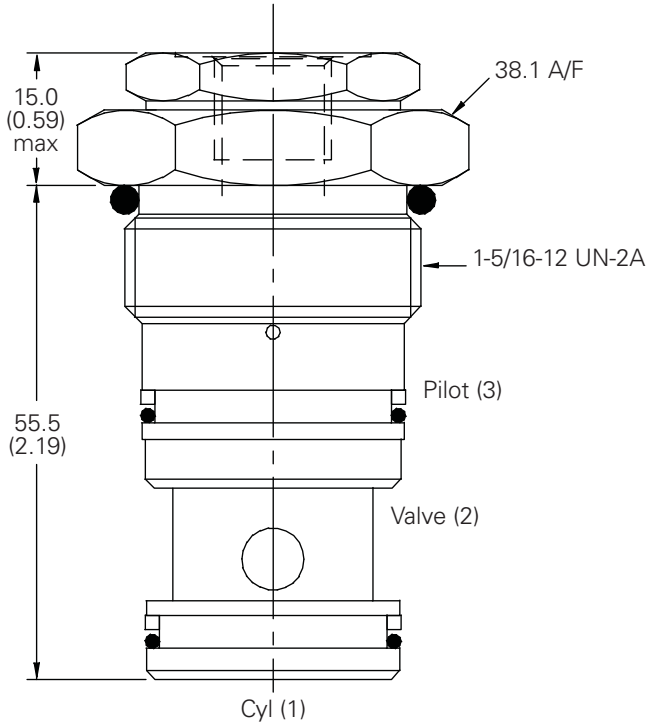

Note: For applications above 210 bar (3000 psi) please consult our technical department or use the steel body.

Complete valve

3/4", 1/2" Ports
Basic code 4CK125

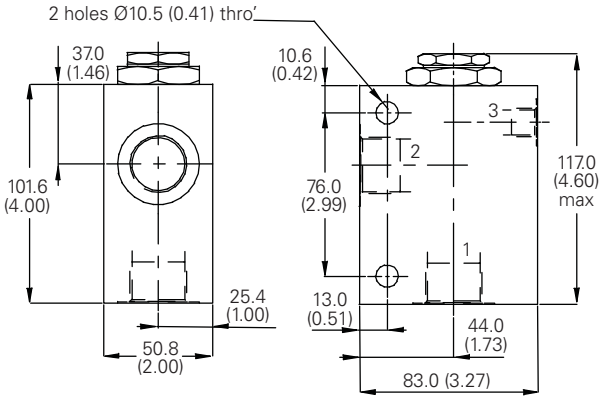

Complete valve

3/4" Ports
Basic code 4CKK125
Internally cross piloted

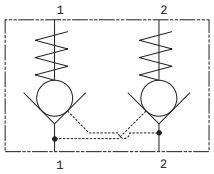

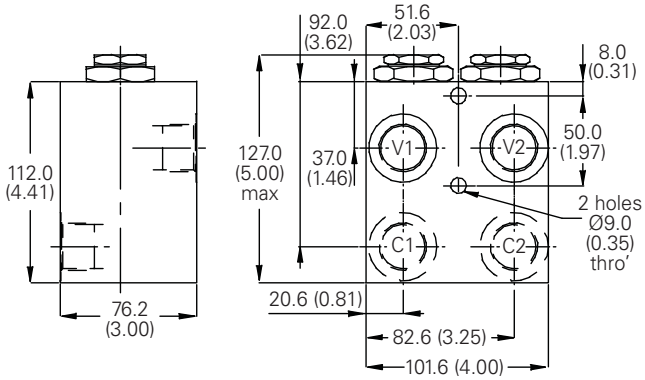

Where measurements are critical request certified drawings. We reserve the right to change specifications without notice.

4CK300 - Check valve

Pilot-to-open, poppet type
300 L/min (80 USgpm) • 350 bar (5000 psi)

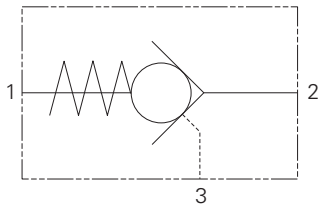

Operation

Pressure on the valve port 2 causes the poppet to lift against the spring force, allowing the flow to the cylinder port 1. Reverse flow is prevented by the poppet reseating. Pressure applied to the pilot port 3 will overcome the cylinder port pressure and lift the poppet from its seat, allowing flow from the cylinder to valve port.

Features

Hardened and ground poppet gives excellent flow capability for valve size, positive sealing and long working life. Cartridge construction allows installation in actuators, manifold blocks and Hydraulic Integrated Circuits. Fits the same cavity as the overcenter valves of a similar size.

Sectional view

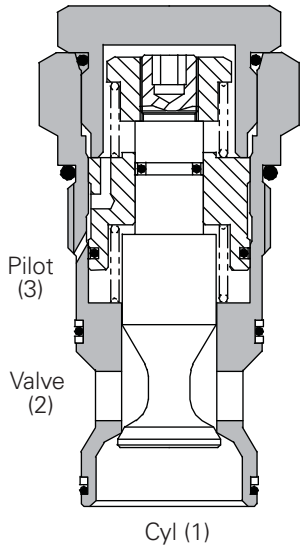

Performance data

Ratings and specifications

Figures based on oil temp of 40° C and viscosity of 32 cSt (150 SUS)	
Rated flow	300 L/min (80 USgpm)
Max pressure	350 bar (5000 psi)
Pilot ratio	3:1
Cartridge material	Working parts hardened and ground steel. Zinc nickel plated body.
Standard housing material	Standard aluminium (up to 210 bar). Add suffix "377" for steel option.
Mounting position	Unrestricted
Cavity number	A6935 (See Section M)
Torque cartridge into cavity	150 Nm (110 lbs ft)
Weight	4CK300 0.28 kg (0.62 lbs) 4CK350 1.15 kg (2.54 lbs) 4CKK350 1.96 kg (4.32 lbs)
Seal kit number	SK683 (Nitrile) SK683V (Viton®)
Recommended filtration level	BS5540/4 Class 18/13 (25 micron nominal)
Operating temperature	-30°C to +90°C (-22° to +194°F)
Leakage	0.5 milliliters/min nominal (5 dpm)
Nominal viscosity range	5 to 500 cSt

Viton is a registered trademark of E.I. DuPont

Description

Pilot check valves allow flow to pass in one direction, with a low pressure drop, then prevent reverse flow until pilot pressure is applied. There are many applications for this valve type, the most common being to lock and hold a cylinder, or another hydraulic actuator, in position.

These valves are ideally suited for fitting directly into a cylinder, giving economy of installation, direct control of cylinder movement and ease of servicing.

Pressure drop

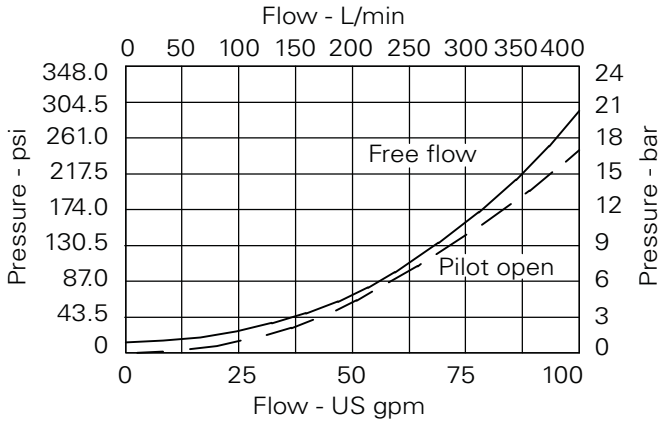

Where measurements are critical request certified drawings. We reserve the right to change specifications without notice.

4CK300 - Check valve

Pilot-to-open, poppet type
300 L/min (80 USgpm) • 350 bar (5000 psi)

Model code

4CK** – 1 10W – S 3**

1 2 3 4 5

1 Basic code

4CK300 - Cartridge Only
4CK350 - Cartridge and Body
4CKK350 - Cartridges and Dual Body

2 Pilot port size

1 - Internal

3 Port sizes

Code	Port size	Housing number - body only			
		Aluminium single	Steel single	Aluminium double	Steel double
10W	1 1/4" BSP 1/4" BSP Pilot Port	B6814	B8610	C8704	C8705
20T	1 1/4" SAE 1/4" SAE Pilot Port	B10630	B11474	C10811	C11564

4 Seals

S - Nitrile (For use with most industrial hydraulic oils)

SV - Viton (For high temperature and most special fluid applications)

5 Optional pilot seal

Omit if not required

Dimensions

mm (inch)

Cartridge only

Basic code
4CK300

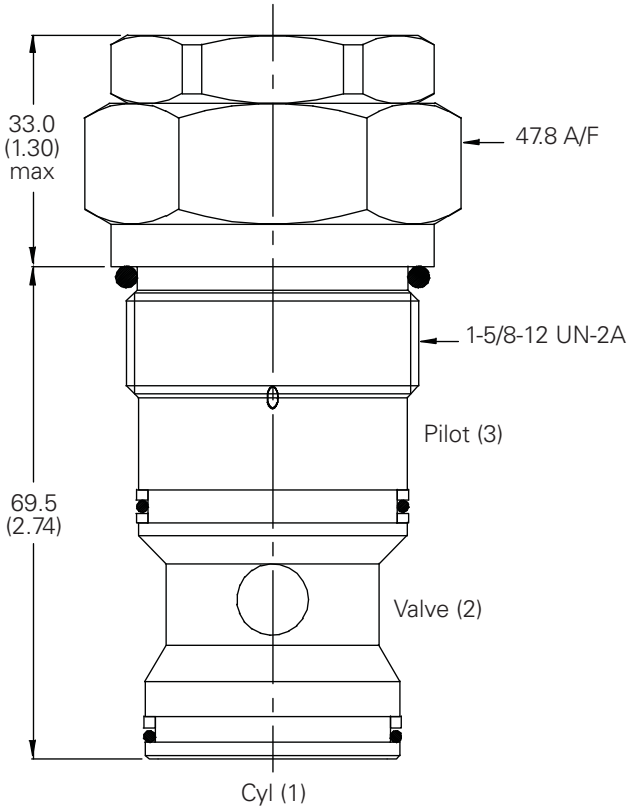

Note: For applications above 210 bar (3000 psi) please consult our technical department or use the steel body.

Single valve

1 1/4" Ports
Basic code
4CK350

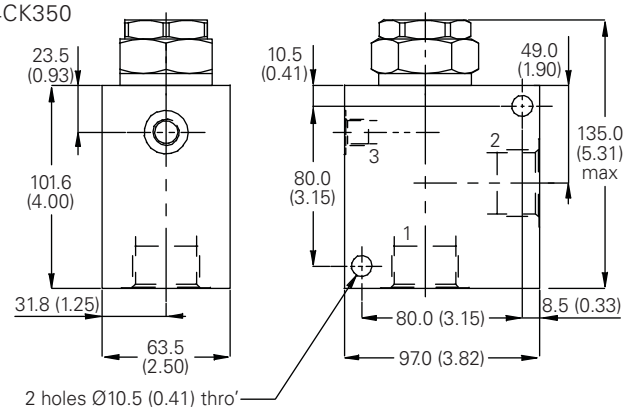

Dual valve

1 1/4" Ports
Basic code 4CKK350
Internally Cross Piloted

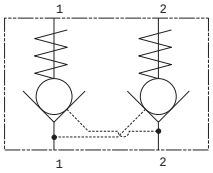

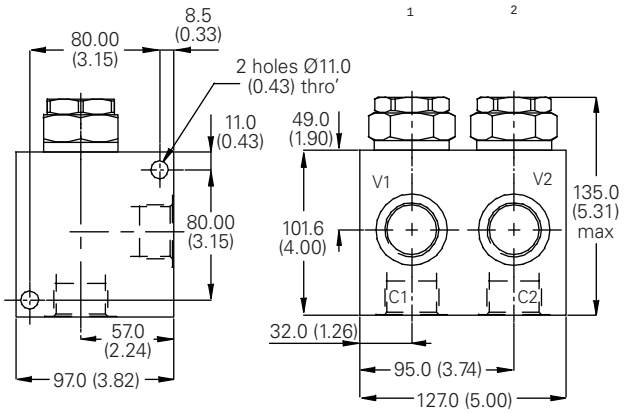

Where measurements are critical request certified drawings. We reserve the right to change specifications without notice.

G

4CK Series - Check valve

Alternative body arrangements for 30 to 300 liters/min valves

Model code

4CK** – 3W – S 3**

1 2 3 4

1 Basic code

4CK36 - Cartridge and Body Through Ported
4CBK35 - Cartridge and Body Banjo Mounted
4CKG35 - Cartridge and Body Gasket Mounted
4CKK35 - Cartridge and Dual Body
4CK156 - Cartridge and Body Through Ported
4CBK150 - Cartridge and Body Banjo Mounted
4CKG150 - Cartridge and Body Gasket Mounted
4CK356 - Cartridge and Body Through Ported
4CKG350 - Cartridge and Body Gasket Mounted

3 Seals

S - Nitrile (For use with most industrial hydraulic oils)
SV - Viton (For high temperature and most special fluid applications)

4 Optional pilot seal

3 - Required
Omit if not required

2 Port sizes

Code	Port size	Housing number						
		Aluminium	**Steel**	**Aluminium**	**Aluminum**	**Steel**	**Aluminum**	**Steel**
4CK30	Cartridge	Through Ported Body - Only	**Banjo Mounted**	Gasket Mounted Sub- Assembly	Sub-Assembly	Cross Piloted	Sub-Assembly	
3W	3/8" BSP	B13542	B13543	AXP13617-3W-S	BXP13621-3W-S	-	BXP24147-3W-S	BXP24147-3W-S-377
6T	3/8" SAE	-	-	-	-		BXP24147-6T-S-377	
4CK120	Cartridge							
6W	3/4" SAE	B13629	B13630	AXP13565-6W-S	BXP13634-6W-S	BXP13634-6W-S-377		
4CK300	Cartridge							
10W	1 1/4" BSP	C13637	C13638		CXP20647-10W-S	CXP20647-10W-S-377		

G

Complete valves - 4CK30 cartridge, 3/8" ports

Complete valve

Through ported • Basic code 4CK36

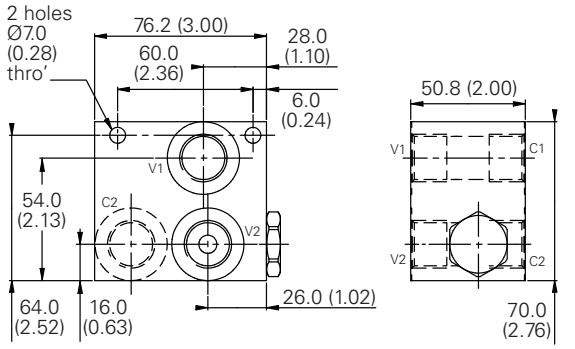

Complete valve

Banjo mounted • Basic code 4CBK35

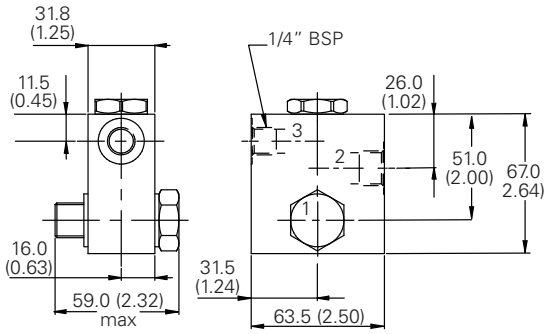

Complete valve

Gasket mounted • Basic code 4CKG35

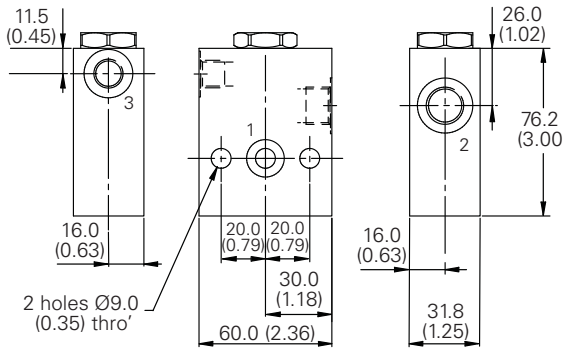

Complete valve

Internally cross piloted • Basic code 4CKK35

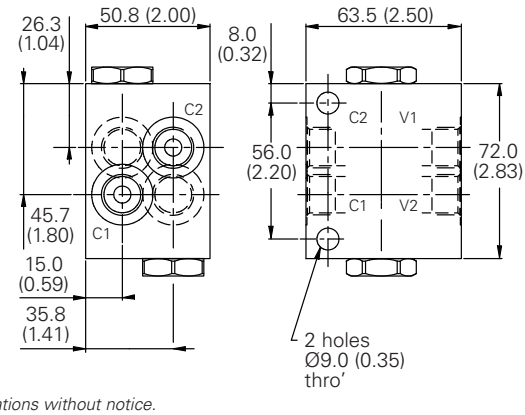

Where measurements are critical request certified drawings. We reserve the right to change specifications without notice.

Complete valves - 4CK120 cartridge, 3/4" ports

Complete valve

Through Ported
Basic code 4CK156

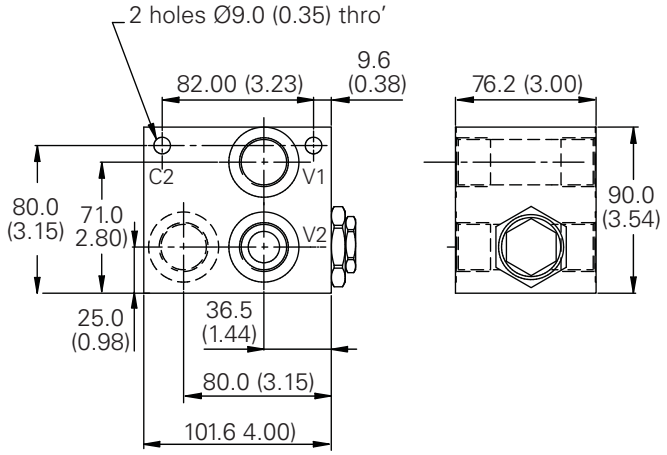

Note: For applications above 210 bar please consult our technical department or use the steel body

Complete valve

Banjo Mounted
Basic code 4CBK150

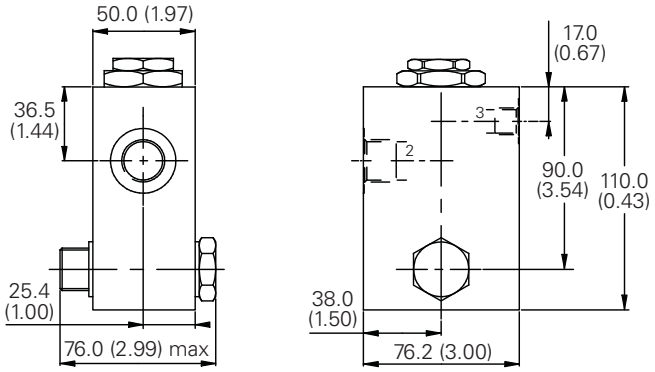

SAE 6000 PSI Flange ports - 4CK120 cartridge, 3/4" ports

Complete valve

Gasket Mounted
Basic code 4CKG150

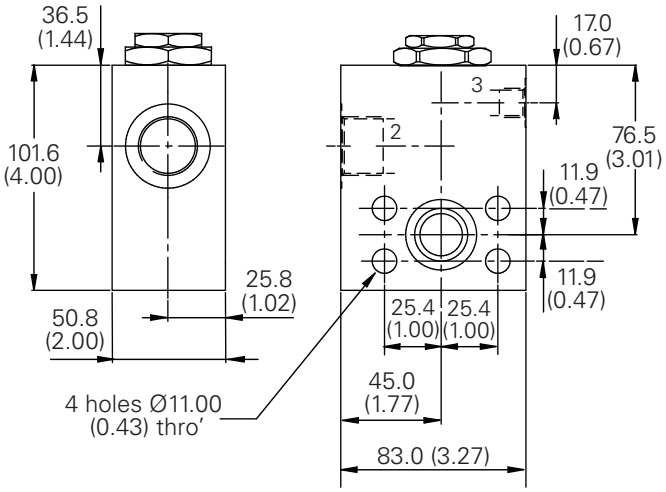

Complete valves - 4CK300 cartridge, 1 1/4" ports

Complete valve

Through ported
Basic code 4CK356

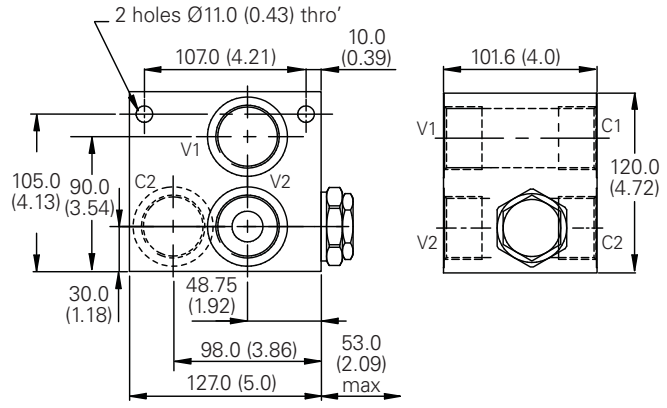

SAE 6000 PSI Flange ports - 4CK300 cartridge, 1 1/4" ports

Complete valve

Gasket Mounted
Basic code 4CKG350

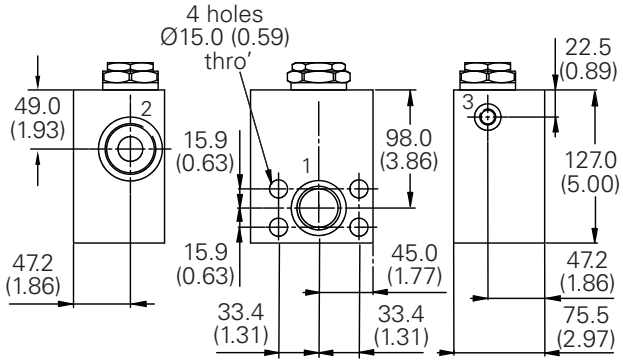

Where measurements are critical request certified drawings. We reserve the right to change specifications without notice.

4SK30 - Check valve

Pilot-to-open, poppet type
30 L/min (8 USgpm) • 350 bar (5000 psi)

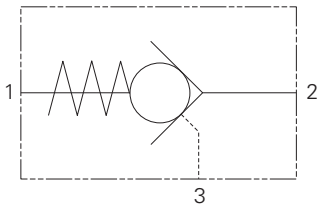

Operation

Pressure on the valve port 2 causes the poppet to lift against the spring force, allowing the flow to the cylinder port 1. Reverse flow is prevented by the poppet reseating. Pressure applied to the pilot port 3 will overcome the cylinder port pressure and lift the poppet from its seat, allowing flow from the cylinder to valve port.

Features

Hardened and ground poppet gives excellent flow capability for valve size, positive sealing and long working life. Cartridge construction allows installation in actuators, manifold blocks and Hydraulic Integrated Circuits. Fits the same cavity as the overcenter valves of a similar size.

Sectional view

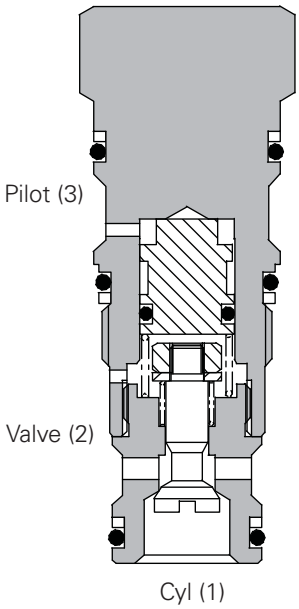

Performance data

Ratings and specifications

Figures based on oil temperature of 40° C and viscosity of 32 cSt (150 SUS)	
Rated flow	30 L/min (8 USgpm)
Maximum pressure	350 bar (5000 psi)
Pilot ratio	3:1 and 5:1
Cartridge material	Working parts hardened and ground steel. Zinc plated body.
Mounting position	Unrestricted
Cavity number	A20090-T11A
Torque cartridge into cavity	45 Nm (33 lbs ft.)
Weight	0.18 kg (0.39 lbs)
Seal kit number	SK1079 (Nitrile) SK1079V (Viton®)
Recommended Filtration level	BS5540/4 Class 18/13 (25 micron nominal)
Operating temperature	–30° to +90° C (-22° to +194°F)
Leakage	0.3 ml/min nominal
Nominal viscosity range	5 to 500 cSt

Viton is a registered trademark of E. I. DuPont

Description

Pilot check valves allow flow to pass in one direction, with a low pressure drop, then prevent reverse flow until pilot pressure is applied. There are many applications for this valve type, the most common being to lock and hold a cylinder, or another hydraulic actuator, in position.

These valves are ideally suited for fitting directly into a cylinder, giving economy of installation, direct control of cylinder movement and ease of servicing.

Pressure drop

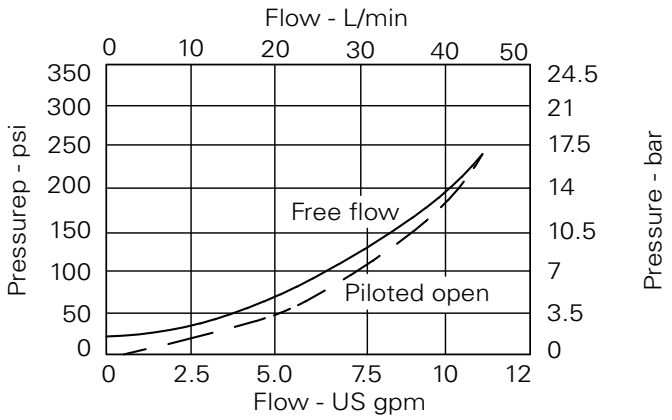

Where measurements are critical request certified drawings. We reserve the right to change specifications without notice.

4SK30 - Check valve

Pilot-to-open, poppet type
30 L/min (8 USgpm) • 350 bar (5000 psi)

Model code

4SK30 – 3 – S 3

1 2 3 4

1 Basic code
4SK30 - Complete valve

2 Pilot ratio
3 - 3:1
5 - 5:1

3 Seals
S - Nitrile (for use with most industrial hydraulic oils)
SV - Viton (for high temperature & most special fluid applications)

4 Optional pilot seal
Omit if not required

Dimensions

mm (inch)

Cartridge only

Basic code
4SK30

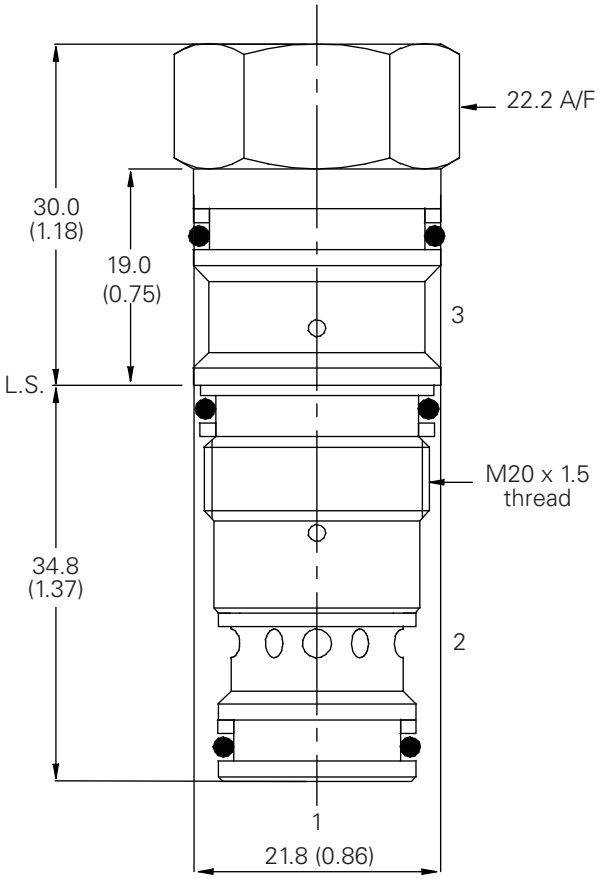

Cavity

Basic code	A20090-T11A
Form Drill	TD-11A
Form Reamer	TR11A

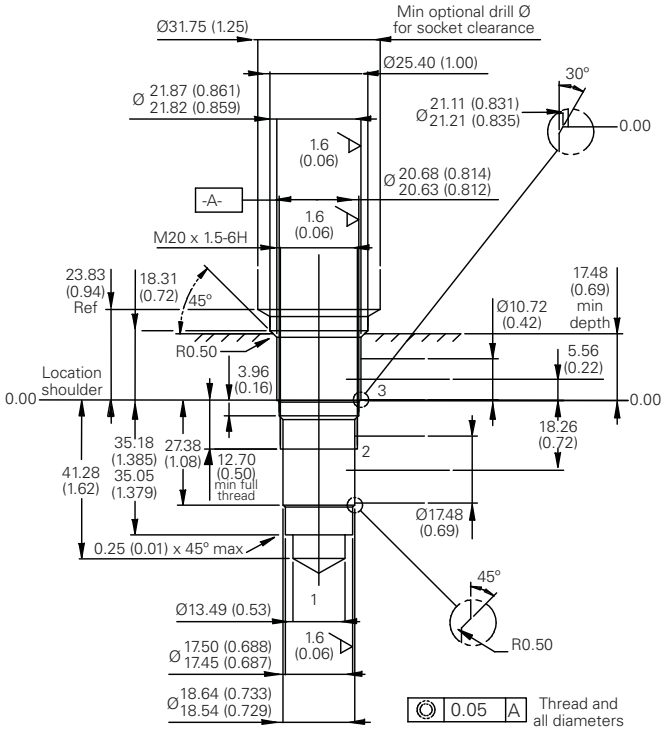

Where measurements are critical request certified drawings. We reserve the right to change specifications without notice.

G

4SK90 - Check valve

Pilot-to-open, poppet type
90 L/min (24 USgpm) • 350 Bar (5000 psi)

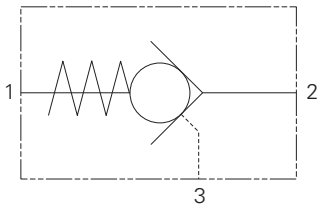

Operation

Pressure on the valve port 2 causes the poppet to lift against the spring force, allowing the flow to the cylinder port 1. Reverse flow is prevented by the poppet reseating. Pressure applied to the pilot port 3 will overcome the cylinder port pressure and lift the poppet from its seat, allowing flow from the cylinder to valve port.

Features

Hardened and ground poppet gives excellent flow capability for valve size, positive sealing and long working life. Cartridge construction allows installation in actuators, manifold blocks and Hydraulic Integrated Circuits. Fits the same cavity as the overcenter valves of a similar size.

Sectional view

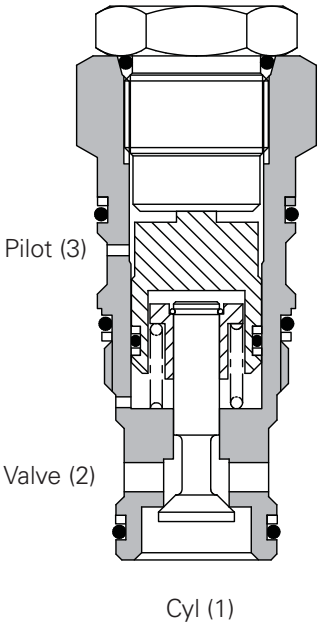

Performance data

Ratings and specifications

Figures based on oil temperature of 40° C and viscosity of 32 cSt (150 SUS)	
Rated flow	90 L/min (24 USgpm)
Maximum pressure	350 bar (5000 psi)
Pilot ratio	4:1
Cartridge material	Working parts hardened and ground steel. Zinc plated body
Mounting position	Unrestricted
Cavity number	A20092-T2A
Torque cartridge into cavity	60 Nm (44 lbs. ft.)
Weight	0.39 kg (0.86 lbs.)
Seal kit number	SK1093 (Nitrile) SK1093V (Viton®)
Recommended Filtration level	BS5540/4 Class 18/13 (25 micron nominal)
Operating temperature	–30°C to +90°C (-22° to +194°F)
Leakage	0.3 ml/min nominal (5 dpm)
Nominal viscosity range	5 to 500 cSt

Viton is a registered trademark of E. I. DuPont

Description

Pilot check valves allow flow to pass in one direction, with a low pressure drop, then prevent reverse flow until pilot pressure is applied. There are many applications for this valve type, the most common being to lock and hold a cylinder, or another hydraulic actuator, in position.

These valves are ideally suited for fitting directly into a cylinder, giving economy of installation, direct control of cylinder movement and ease of servicing.

Pressure drop

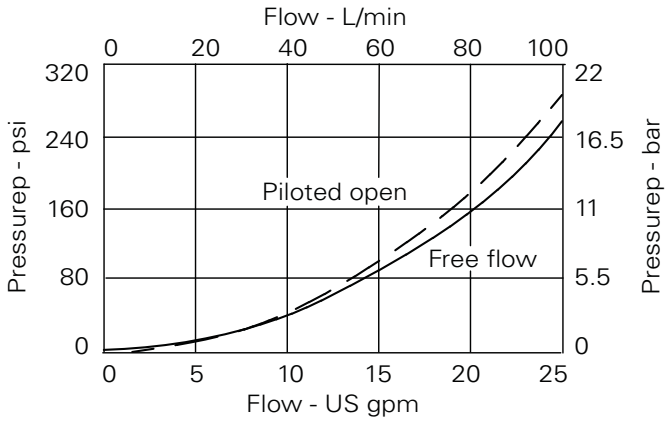

Where measurements are critical request certified drawings. We reserve the right to change specifications without notice.

4SK90 - Check valve

Pilot-to-open, poppet type
90 L/min (24 USgpm) • 350 Bar (5000 psi)

Model code

4SK90 – 4 – S 3

1 2 3 4

1 Basic code
4SK90 - Complete valve

2 Pilot ratio
4 - 4:1

3 Seals
S - Nitrile (for use with most industrial hydraulic oils)
SV - Viton (for high temperature & most special fluid applications)

4 Optional pilot seal
Omit if not required

Dimensions

mm (inch)

Cartridge only

Basic code
4SK90

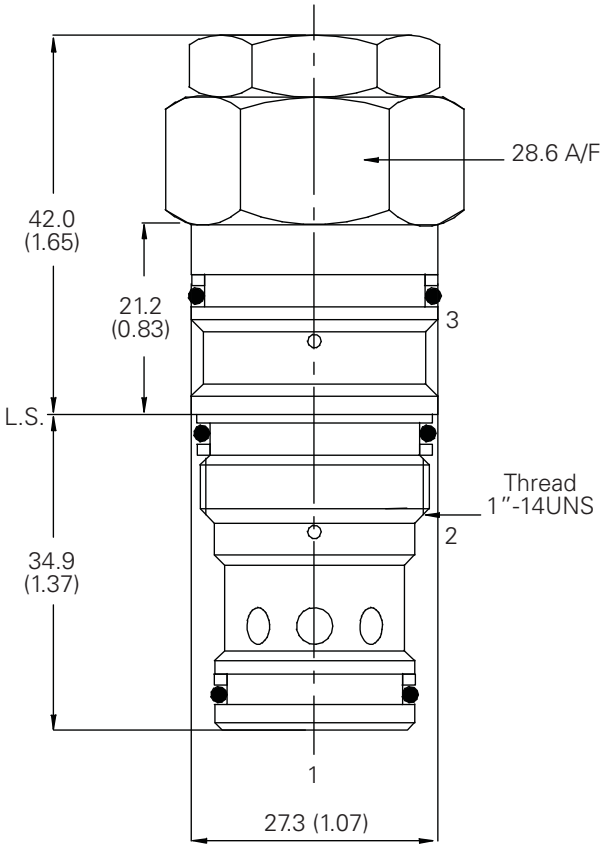

Cavity

Basic code	A20092-T2A
Form drill	TD-2A
Form reamer	TR-2A

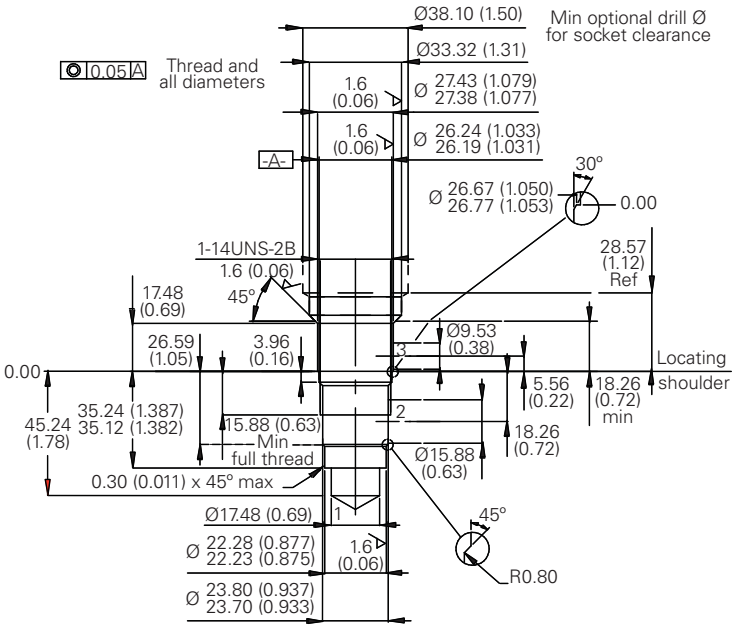

Note: For applications above 210 bar (3000 psi) please consult our technical department or use the steel body.

Where measurements are critical request certified drawings. We reserve the right to change specifications without notice.

4SK140 Series - Check valve

Pilot-to-open, poppet type
140 L/min (37 USgpm) • 350 bar (5000 psi)

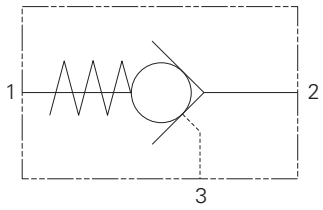

Operation

Pressure on the valve port 2 causes the poppet to lift against the spring force, allowing the flow to the cylinder port 1. Reverse flow is prevented by the poppet reseating.

Pressure applied to the pilot port 3 will overcome the cylinder port pressure and lift the poppet from its seat, allowing flow from the cylinder to valve port.

Features

Hardened and ground poppet gives excellent flow capability for valve size, positive sealing and long working life. Cartridge construction allows installation in actuators, manifold blocks and Hydraulic Integrated Circuits. Fits the same cavity as the overcenter valves of a similar size.

Sectional view

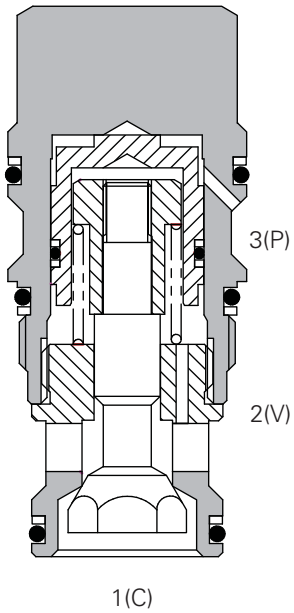

Performance data

Ratings and specifications

Figures based on oil temperature of 40˚ C and viscosity of 32 cSt (150 SUS)	
Rated flow	140 L/min (37 USgpm)
Maximum pressure	350 bar (5000 psi)
Pilot ratio	3:1
Cartridge material	Working parts hardened and ground steel. Zinc plated body.
Mounting position	Unrestricted
Cavity number	A20094-T17A
Torque cartridge into cavity	200 Nm (150 lbs. ft.)
Weight	0.44 kg (0.96 lbs.)
Seal kit number	SK1116 (Nitrile) SK1116V (Viton®)
Recommended filtration level	BS5540/4 Class 18/13 (25 micron nominal)
Operating temperature	–30°C to +90°C (-22° to +194°F)
Leakage	0.3 ml/min nominal (5 dpm)
Nominal viscosity range	5 to 500 cSt

Viton is a registered trademark of E. I. DuPont

Description

Pilot check valves allow flow to pass in one direction, with a low pressure drop, then prevent reverse flow until pilot pressure is applied. There are many applications for this valve type, the most common being to lock and hold a cylinder, or another hydraulic actuator, in position.

These valves are ideally suited for fitting directly into a cylinder, giving economy of installation, direct control of cylinder movement and ease of servicing.

Pressure drop

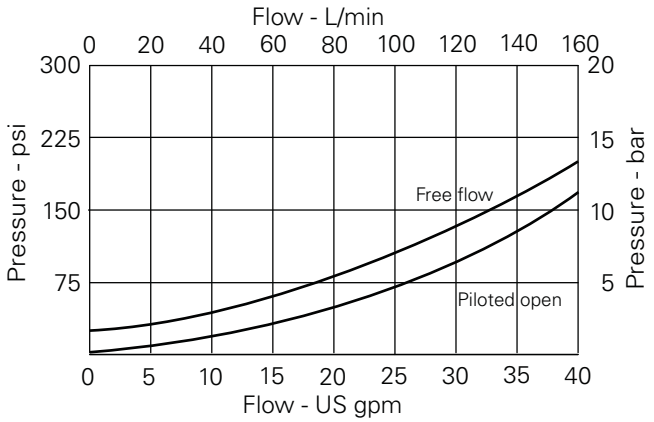

Where measurements are critical request certified drawings. We reserve the right to change specifications without notice.

4SK140 Series - Check valve

Pilot-to-open, poppet type
140 L/min (37 USgpm) • 350 bar (5000 psi)

Model code

4SK140 – 3 – S 3

1 2 3 4

1 Function
4SK140 - Complete valve

2 Pilot ratio
3 - 3:1

3 Seals
S - Nitrile (for use with most industrial hydraulic oils)
SV - Viton (for high temperature and most special fluid applications)

4 Optional pilot seal
Omit if not required

Dimensions

mm (inch)

Cartridge only

Basic code
4SK140

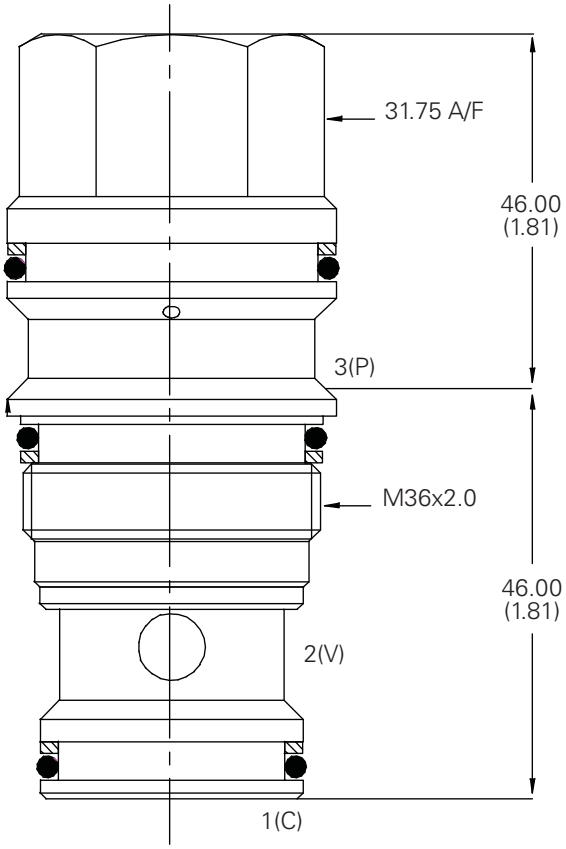

Cavity

Basic code	A20094-T17A
Form drill	TD-17A
Form reamer	TR-17A

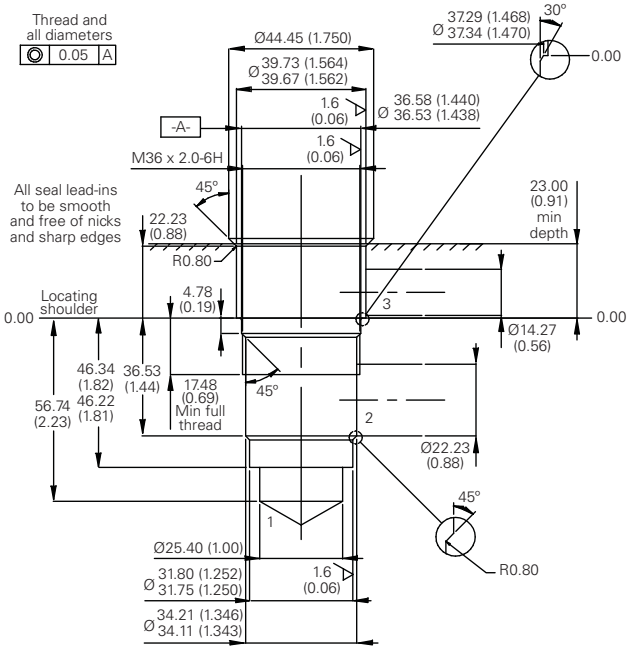

Where measurements are critical request certified drawings. We reserve the right to change specifications without notice.

G

DPC2-8 - Check valve

Dual, pilot-to-open, poppet type
19 L/min (5 USgpm) • 240 bar (3500 psi)

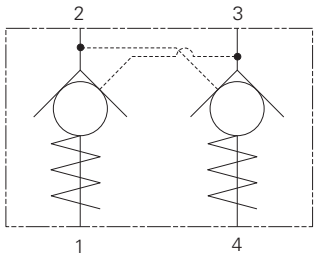

Operation

The valve allows flow from port 2 to port 1 or from port 3 to port 4 when the spring bias is overcome. Flow is blocked from ports 4 to 3 and from 1 to 2 until pilot pressure is applied to ports 2 and 3 respectively.

Features

Hardened and ground poppets to give minimal internal leakage and long life.

Sectional view

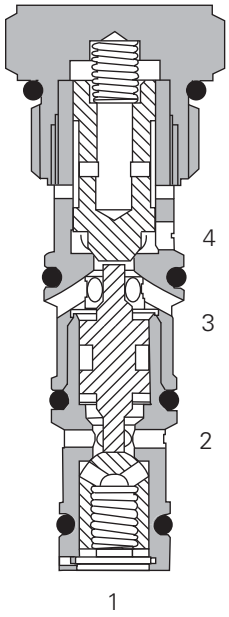

Performance data

Ratings and specifications

Performance data is typical with fluid at 21,8 cST (105 SUS) and 49°C (120°F)	
Typical application pressure (all ports)	240 bar (3500 psi)
Cartridge fatigue pressure (infinite life)	240 bar (3500 psi)
Rated inlet flow	19 L/min (5 USgpm)
Pilot ratio	3:1
Maximum internal leakage Ports 2 to 3 and 3 to 2: Ports 4 to 3 and 1 to 2:	 140 cc/min. (8.5 in³/min.) @ 240 bar (3500 psi) 5 drops/min. @ 240 bar (3500 psi)
Free flow cracking pressure @ 1 L/min (0.25 USgpm)	1,72 bar (25 psi)
Temperature range	–40° to 120° C (–40° to 248° F)
Cavity	C-8-4
Fluids	All general purpose hydraulic fluids such as MIL - H-5606, SAE 10, SAE 20, etc.
Filtration	Cleanliness code 18/**16/13**
Standard housing material	Aluminum or steel
Weight, cartridge only	0,08 kg (0.18 lbs.)
Seal kit	02-370387 Urethane

Description

This is a dual pilot-to-open check valve ideal for stabilizer cylinders fitting directly into the cylinder reducing pipework to a minimum.

Pressure drop

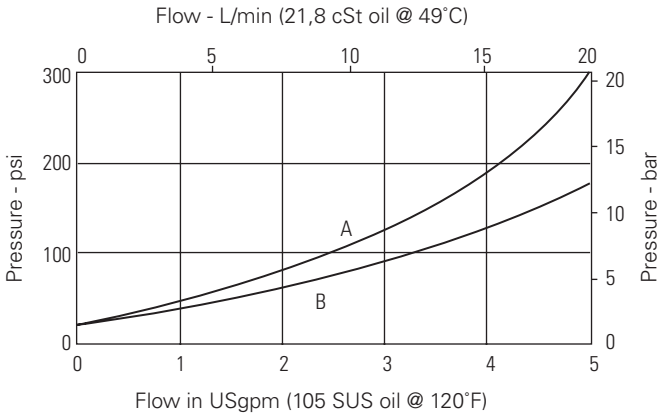

A – Port 2 to Port 1
B – Port 3 to Port 4

⚠ Warning

Do not use Pilot-to-Open Check Valves in load holding applications where either overrunning loads are possible or load release speed is critical. Failure to observe these guidelines may result in bodily injury or damage to equipment.

Where measurements are critical request certified drawings. We reserve the right to change specifications without notice.

DPC2-8 - Check valve

Dual, pilot-to-open, poppet type
19 L/min (5 USgpm) • 240 bar (3500 psi)

Model code

DPC2	–	8		U	–	A	–	25	–	*	–	**	–	00
1		2		3		4		5		6		7		8

1 Function
DPC2 - Dual pilot operated check

2 Size
8 - 8 size

3 Seal material
U - Urethane

4 Pilot leakage
A - Standard

5 Crack pressure
25 - 1,7 bar (25 psi)

6 Body
Omit for cartridge only
A - Aluminum
S - Steel

7 Port size

Code	Port size	Housing number	
		Aluminium fatigue rated	Steel fatigue rated
0	Cartridge only		
2G	1/4" BSPP	02-160747	02-160753
3G	3/8" BSPP	02-160748	02-160754
4T	SAE 4	02-160749	02-160751
6T	SAE 6	02-160750	02-160752

See section J for housing.

8 Special features
00 - None
(Only required if valve has special features, omitted if "00")

Dimensions

mm (inch)

Note: Torque cartridge in Aluminum or Steel housing to 34-41 Nm (25-30 ft. lbs).

Cartridge only

Basic code
4SK140

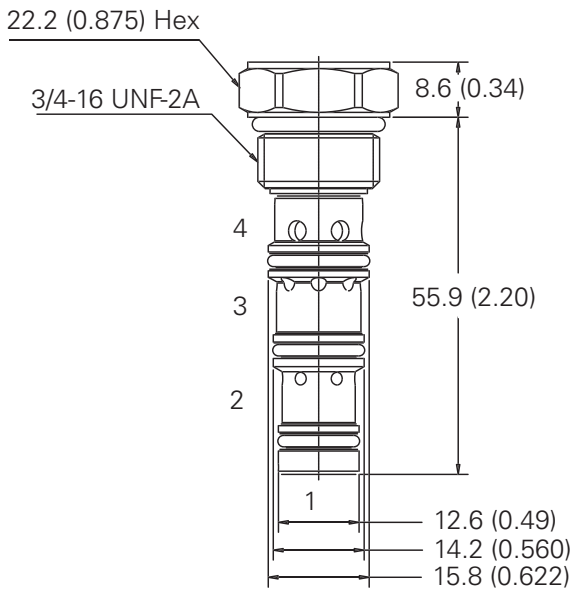

Installation drawing (Steel)

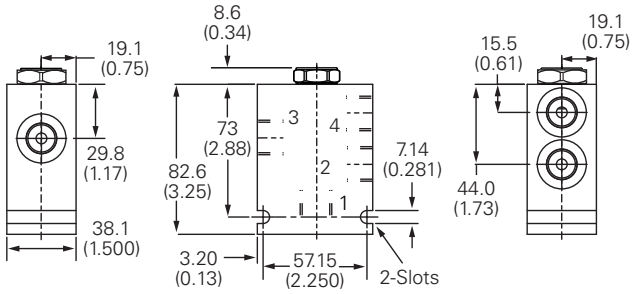

⚠ Warning
Aluminum housings can be used for pressures up to 210 bar (3000 psi). Steel housings must be used for operating pressures above 210 bar (3000 psi).

Where measurements are critical request certified drawings. We reserve the right to change specifications without notice.

4CKKT - Check valve

Dual, pilot-to-open with thermal relief
25 L/min (6.6 USgpm) • 300 bar (4350 psi)

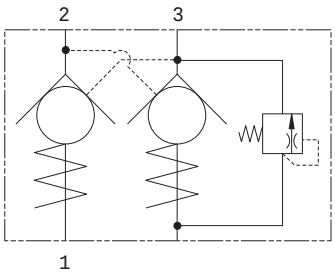

Operation

Pressure on the valve port causes the poppet to lift against the spring force, allowing the flow to the cylinder port. Reverse flow is prevented by the poppet reseating. Pressure applied to the pilot port will overcome the cylinder port pressure and lift the poppet from its seat, allowing flow from the cylinder to valve port.

In dual pilot check valves, each pilot section is cross connected to the opposite line giving automatic pilot operation in both directions. When the pressure in C2 rises above the setting of the relief valve, the relief valve will open, allowing flow to the V2 port, relieving pressure on the cylinder.

Features

Hardened and ground poppet gives excellent flow capability for valve size, positive sealing and long working life. Cartridge construction allows installation in actuators, manifold blocks and Hydraulic Integrated Circuits.

Sectional view

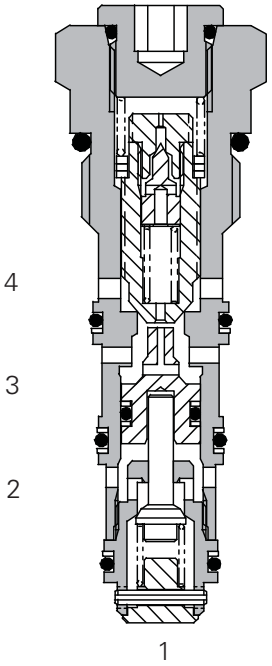

Performance data

Ratings and specifications

Figures based on oil temperature of 40˚ C and viscosity of 32 cSt (150 SUS)	
Rated flow	25 L/min (6.6 USgpm)
Maximum pressure	300 bar (4350 psi)
Pilot ratio	3:1
Cartridge material	Working parts hardened and ground steel. Electroless zinc plated body.
Standard housing material	Standard aluminum (up to 210 bar). Add suffix "377"' for steel option.
Mounting position	Unrestricted
Cavity number	A12744 (See Section M)
Torque cartridge into cavity	30 Nm (22 lbs. ft.)
Weight	4CKKT50 0.08 kg (0.18 lbs) 4CKKT55 0.34 kg (0.75 lbs)
Seal kit number	SK1120 (Nitrile) SK1120V (Viton®))
Recommended filtration level	BS5540/4 Class 18/13 (25 micron nominal)
Operating temperature	–30° to +90° C (-22° to +194°F)
Leakage	C1 - V1 1.0 ml/min nominal (15 dpm) C2 - V2 0.3 ml/min nominal (5 dpm)
Nominal viscosity range	5 to 500 cSt

Viton is a registered trademark of E. I. DuPont

Description

Pilot check valves allow flow to pass in one direction, with a low pressure drop, then prevent reverse flow until pilot pressure is applied. There are many applications for this valve type, the most common being to lock and hold a cylinder, or another hydraulic actuator, in position.

A pilot relief valve will protect the cylinder and hoses from thermal expansion of the hydraulic fluid. The maximum flow through the relief is 1.0l/min.

Pressure drop

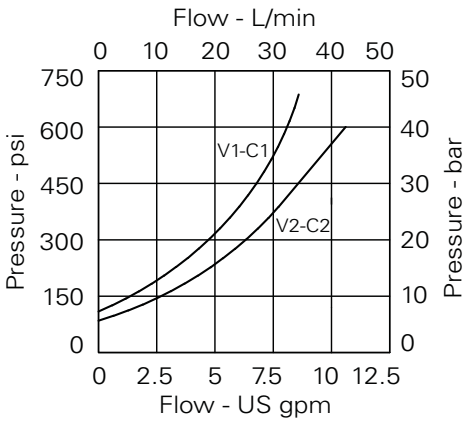

Free flow

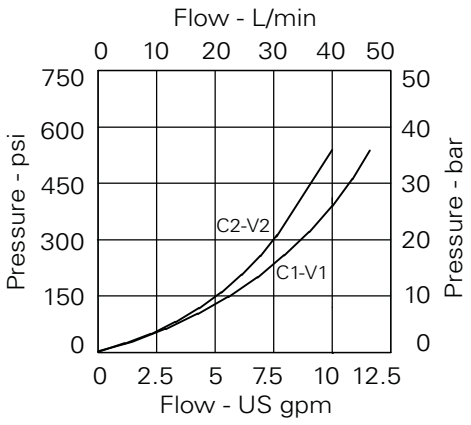

Piloted open

Where measurements are critical request certified drawings. We reserve the right to change specifications without notice.

4CKKT - Check valve

Dual, pilot-to-open with thermal relief
25 L/min (6.6 USgpm) • 300 bar (4350 psi)

Model code

4CKKT ** – **3W** – **3** **S** **3** – **28**

1 2 3 4 5 6

1 Basic code

4CKKT50 - Cartridge only
4CKKT55 - Cartridge and body

2 Port size - bodied valves only

Code	Port size	Housing number
		Aluminium dual
3W	3/8" BSP	B19240
6T	3/8" SAE	B19241
4W	1/2" BSP	B19228
8T	1/2" SAE	B19229

3 Pilot Ratio

3 - 3:1

4 Seals

S - Nitrile (For use with most industrial hydraulic oils
SV - Viton (For high temperature and most special fluid applications)

5 Optional Pilot Seal

3 - Standard
Omit if not required

6 Pressure Setting

24 - 240 bar (3500 psi)
28 - 280 bar (4000 psi)
35 - 350 bar (5000 psi)

Description

mm (inch)

Cartridge only

Basic code
4CKKT50

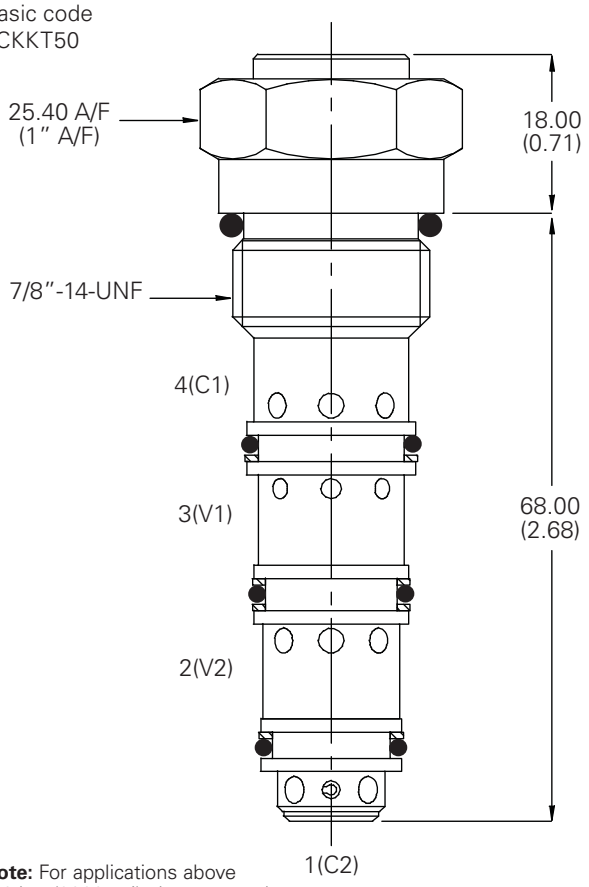

Note: For applications above 210 bar (3000 psi) please consult our technical department or use the steel body option.

Dual valve

3/8" Ports
4CKKT55 Internally Cross -Piloted

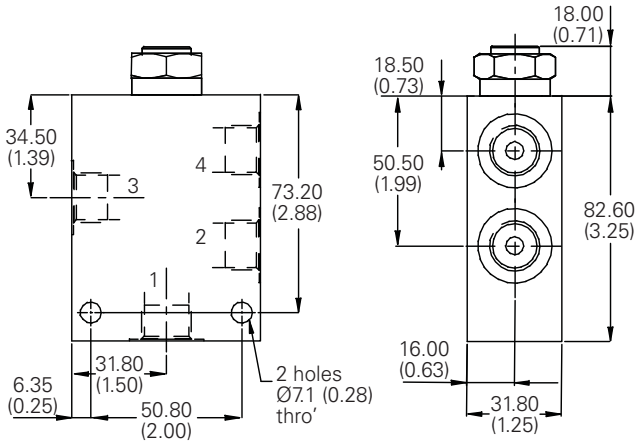

G

Where measurements are critical request certified drawings. We reserve the right to change specifications without notice.

4KD25 - Check valve

Pilot-to-open with decompression stage
25 L/min (6 USgpm) • 700 bar (10000 psi)

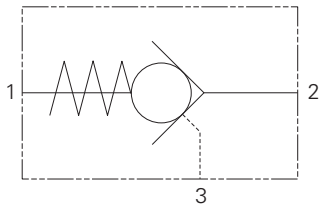

Operation

In free flow direction, flow through inlet unseats the poppet and flows out of the cylinder port. When the control valve is centered the load is locked. When pilot pressure is applied the piston unseats the small poppet in the center of the main poppet. Flow through this small seat area lowers the load or locked pressure (decompression stage). With load pressure reduced the main poppet is then piloted fully open allowing reverse flow.

Features

Decompression feature for low pilot pressure requirements and to reduce hydraulic noise on rapid loss of pressure.

Sectional view

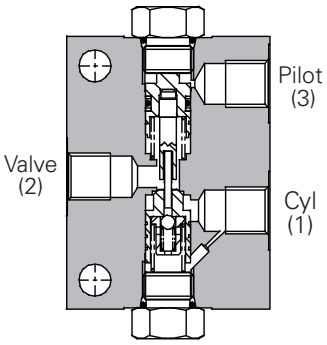

Performance data

Ratings and specifications

Figures based on oil temperature of 40° C and viscosity of 32 cSt (150 SUS)	
Rated flow	25 L/min (6 USgpm)
Maximum pressure	700 bar (10000 psi) Cylinder Port 140 bar (2000 psi) Pilot Port
Pilot ratio	25:1 Decompression 4:1 Full Flow
Body material	Steel
Mounting position	Line mounted
Weight	0.8 kg (1.8 lbs.)
Seal kit number	SK1060 (Nitrile) SK1060V (Viton®)
Recommended filtration level	BS5540/4 Class 18/13 (25 micron nominal)
Operating temperature	–30° to +90° C (-22° to +194°F)
Nominal viscosity range	5 to 500 cSt

Viton is a registered trademark of E. I. DuPont

Description

Used to lock a cylinder or part of a circuit and prevent reverse flow until pilot pressure is applied. For use in high pressure, low flow circuits and circuits requiring decompression. Can be used in conjunction with the 1T16 pressure intensifier. See page J-42.

Pressure drop

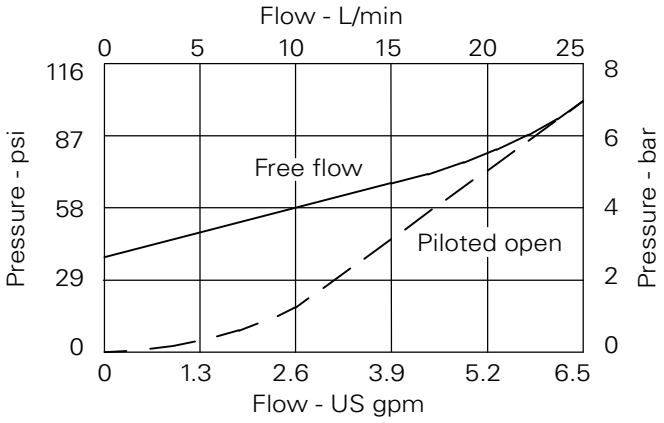

G

Where measurements are critical request certified drawings. We reserve the right to change specifications without notice.

4KD25 - Check valve

Pilot-to-open with decompression stage
25 L/min (6 USgpm) • 700 bar (10000 psi)

Model code

4KD25	–	N	2W	–	S	3
1		2	3		4	5

1 Basic code
4KD25 - Complete valve

2 Adjustment means
N - Fixed

3 Port sizes - bodied valves only
2W - 1/4" BSP

4 Seals
S - Nitrile (for use with most industrial hydraulic oils)
SV - Viton (for high temperature and most special fluid applications)

5 'O' Ring on pilot piston
3 - Standard
Omit if not required

Dimensions

mm (inch)

Complete valve

1/4" Ports
Basic code
4KD25

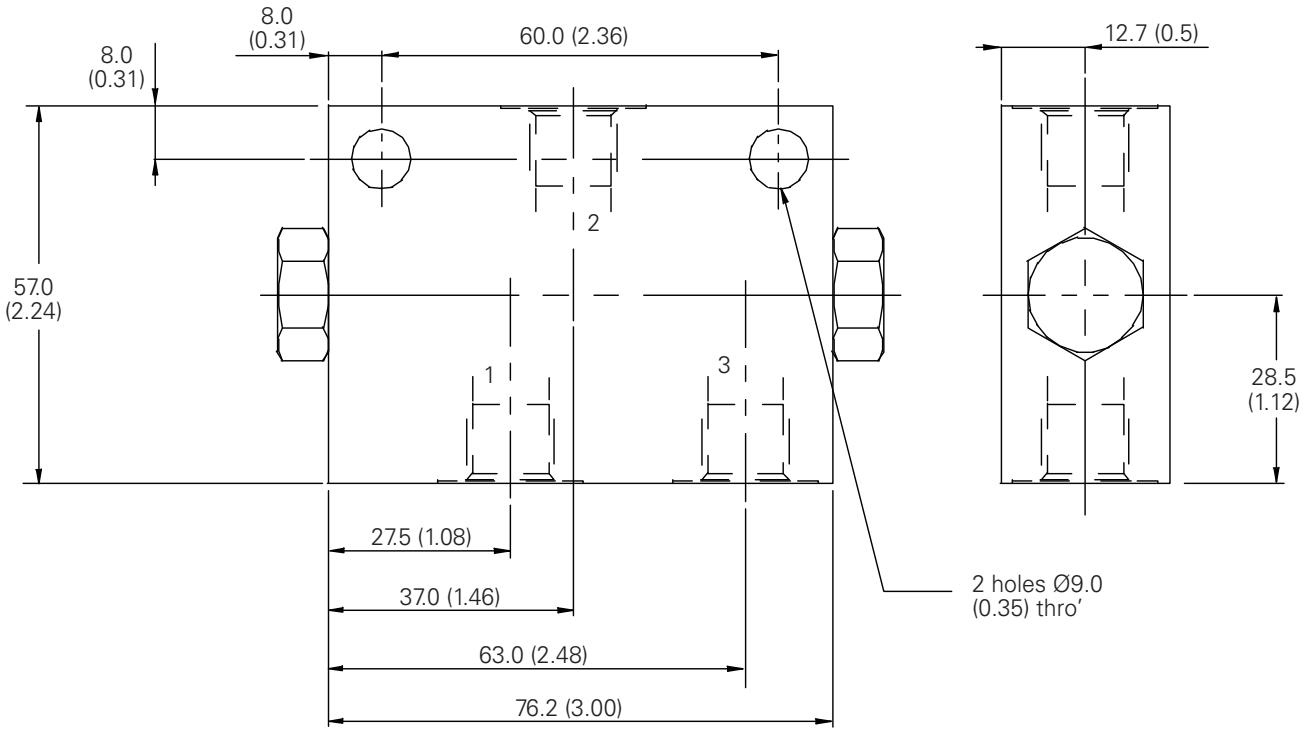

Where measurements are critical request certified drawings. We reserve the right to change specifications without notice.

5CK30 - Check valve

Pilot-to-close. ball type
30 L/min (8 USgpm) • 350 bar (5000 psi)

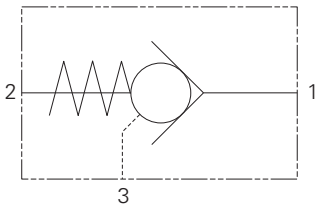

Operation

Pressure on the cylinder port causes the ball to lift against the spring force, allowing flow through to the valve port. Reverse flow is prevented by the ball reseating. Pressure applied to the pilot port will hold the ball against its seat, preventing flow from cylinder to valve.

Features

Easy flow path gives good pressure to flow characteristics and hardened components ensure a long working life. Cartridge construction allows installation in actuators, manifold blocks and Hydraulic Integrated Circuits. They fit the same cavities as the 4CK pilot-to-open check valves, so care should be taken when selecting the valve.

Sectional view

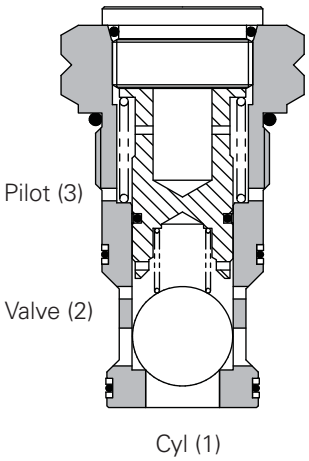

Performance data

Ratings and specifications

Figures based on oil temperature of 40˚ C and viscosity of 32 cSt (150 SUS)	
Rated flow	30 L/min (8 USgpm)
Maximum pressure	350 bar (5000 psi)
Pilot ratio	2:1
Cartridge material	Working parts hardened and ground steel. Zinc nickel plated body.
Standard housing material	Standard aluminum (up to 210 bar). Add suffix"377" for steel option
Mounting position	Unrestricted
Cavity number	A6610 (See Section M)
Torque cartridge into cavity	45 Nm (33 lbs. ft.)
Weight	0.08 kg (0.18 lbs)
Seal kit number	SK829 (Nitrile SK829V (Viton®)
Recommended Filtration level	BS5540/4 Class 18/13 (25 micron nominal)
Operating temperature	–30° to +90°C (-22° to +194°F)
Leakage	0.3 ml/min nominal (5 dpm)
Nominal viscosity range	5 to 500 cSt

Viton is a registered trademark of E. I. DuPont

Description

Pilot to close check valves allow flow to pass in one direction, with a low pressure drop to prevent reverse flow. When the pilot pressure is applied, flow is prevented in either direction. The pilot ratio of 2:1 allows a lower pressure in the pilot line to hold the valve closed.

The 5CK series are check cartridges ideally suited for fitting directly onto a cylinder. They are ideal for use in regenerative circuits, accumulator dump circuits and in control of cylinders or motors.

Pressure drop

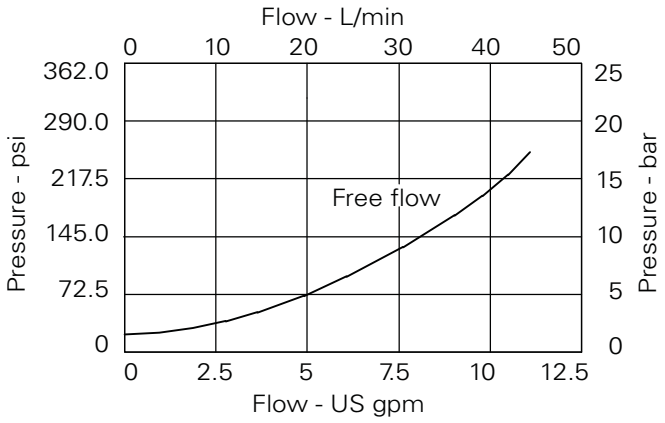

Where measurements are critical request certified drawings. We reserve the right to change specifications without notice.

5CK30 - Check valve

Pilot-to-close. ball type
30 L/min (8 USgpm) • 350 bar (5000 psi)

Model code

5CK* 1 – 3W – S 2**

1 2 3 4 5

1 Basic code

5CK30 - Cartridge only
5CK35 - Cartridge & body

2 Pilot port size

1 - Internal
Omit for line valves

3 Port size - bodied valves only

Code	Port size	Housing number	
		Aluminum	Steel
3W	3/8" BSP 1/4" BSP Pilot Port	B6743	B12823
6T	3/8" SAE 1/4" SAE Pilot Port	B10536	
8T	1/2" SAE 1/4" Pilot Port		B11811

4 Seals

S - Nitrile (for use with most industrial hydraulic oils)
SV - Viton (for high temperature and most special fluid applications)

5 Pilot ratio

2 - 2:1

Dimensions

mm (inch)

Cartridge only

Basic code
5CK30

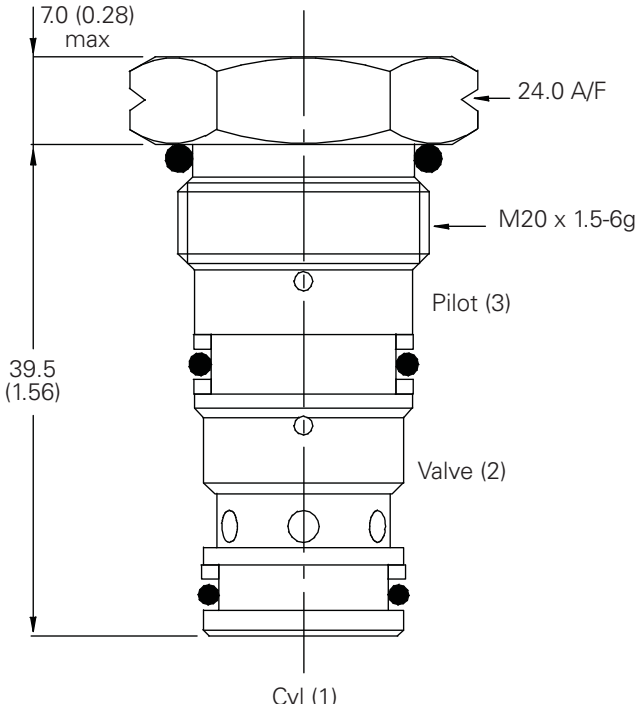

Single valve

3/8", 1/2" Ports
Basic code
5CK35

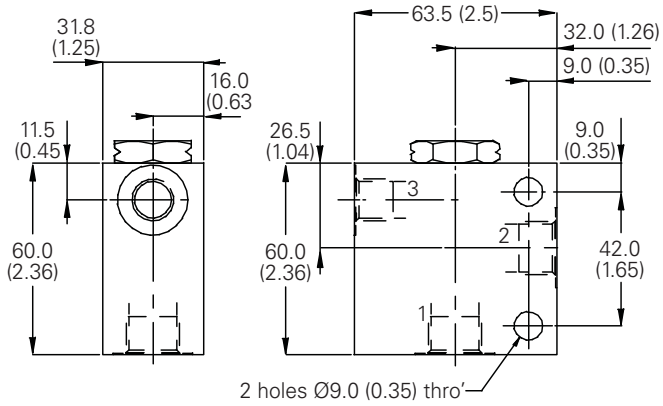

Note: For applications above 210 bar (3000 psi) please consult our technical department or use the steel body option.

Where measurements are critical request certified drawings. We reserve the right to change specifications without notice.

5CK120 - Check valve

Pilot-to-close, ball type
120 L/min (32 USgpm) • 350 bar (5000 psi)

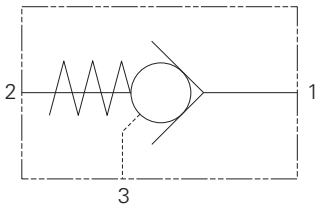

Operation

Pressure on the cylinder port causes the ball to lift against the spring force, allowing flow through to the valve port. Reverse flow is prevented by the ball reseating. Pressure applied to the pilot port will hold the ball against its seat, preventing flow from cylinder to valve.

Features

Easy flow path gives good pressure to flow characteristics and hardened components ensure a long working life. Cartridge construction allows installation in actuators, manifold blocks and Hydraulic Integrated Circuits. They fit the same cavities as the 4CK pilot-to-open check valves, so care should be taken when selecting the valve.

Sectional view

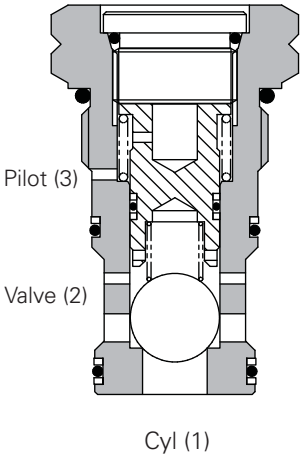

Performance data

Ratings and specifications

Figures based on oil temperature of 40˚ C and viscosity of 32 cSt (150 SUS)	
Rated flow	120 L/min (32 USgpm)
Maximum pressure	350 bar (5000 psi)
Pilot ratio	2:1
Cartridge material	Working parts hardened and ground steel. Zinc nickel plated body.
Standard housing material	Standard aluminum (up to 210 bar*). Add suffix" 377" for steel option.
Mounting position	Unrestricted
Cavity number	A877
Torque cartridge into cavity	100 Nm (74 lbs. ft.)
Weight	0.28 kg (0.62 lbs)
Seal kit number	SK833 (Nitrile) SK833 (Viton®)
Recommended Filtration level	BS5540/4 Class 18/13 (25 micron nominal)
Operating temperature	–30° to +90° C (-22° to +194°F)
Leakage	0.3 ml/min nominal (5 dpm)
Nominal viscosity range	5 to 500 cSt

Viton is a registered trademark of E. I. DuPont

Description

Pilot to close check valves allow flow to pass in one direction, with a low pressure drop to prevent reverse flow. When the pilot pressure is applied, flow is prevented in either direction. The pilot ratio of 2:1 allows a lower pressure in the pilot line to hold the valve closed.

The 5CK series are check cartridges ideally suited for fitting directly onto a cylinder. They are ideal for use in regenerative circuits, accumulator dump circuits and in control of cylinders or motors.

Pressure drop

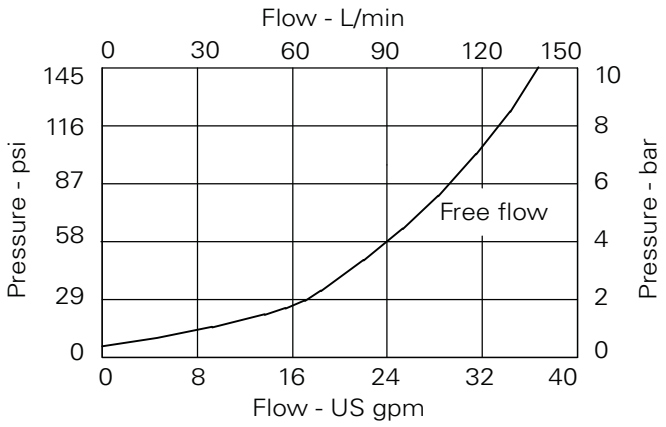

Where measurements are critical request certified drawings. We reserve the right to change specifications without notice.

5CK120 - Check valve

Pilot-to-close, ball type
120 L/min (32 USgpm) • 350 bar (5000 psi)

Model code

5CK* 1 – 3W – S 2**

1 2 3 4 5

1 Function

5CK120 - Cartridge only
5CK125 - Cartridge and body

2 Pilot port size

1 - Internal
Omit for line valves

3 Port size

Code	Port size	Housing number	
		Aluminum	Steel
6W	3/4" BSP 1/4" BSP/SAE Pilot Port	B6898	B5544
12T	3/4" SAE 1/4" SAE Pilot Port	B8200	
16T	1" SAE 1/4" SAE Pilot Port	B10708	B11814

4 Seals

S - Nitrile (for use with most industrial hydraulic oils)
SV - Viton (for high temperature and most special fluid applications)

5 Pilot Ratio

2 - 2:1

Dimensions

mm (inch)

Cartridge only

Basic code
5CK120

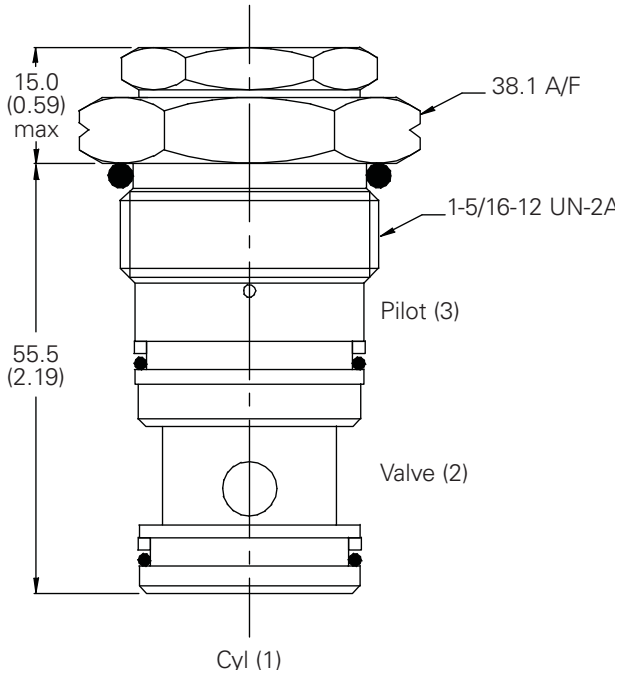

Single valve

3/4", 1" Ports
Basic code
5CK125

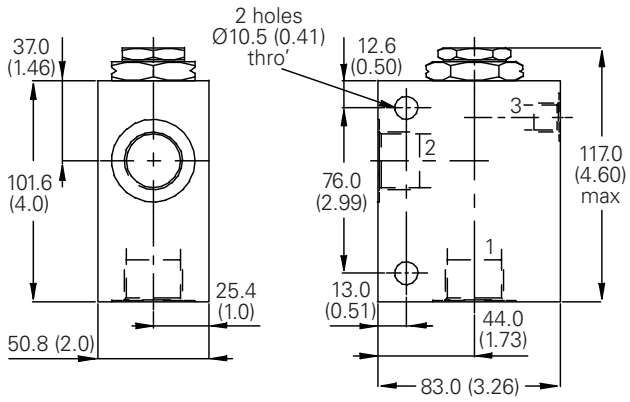

Note: For applications above 210 bar (3000 psi) please consult our technical department or use the steel body option.

Where measurements are critical request certified drawings. We reserve the right to change specifications without notice.

5CK300 - Check valve

Pilot-to-close, ball type
250 L/min (65 USgpm) • 350 bar (5000 psi)

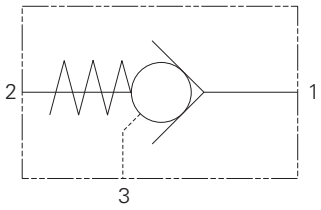

Operation

Pressure on the cylinder port causes the ball to lift against the spring force, allowing flow through to the valve port. Reverse flow is prevented by the ball reseating. Pressure applied to the pilot port will hold the ball against its seat, preventing flow from cylinder to valve.

Features

Easy flow path gives good pressure to flow characteristics and hardened components ensure a long working life. Cartridge construction allows installation in actuators, manifold blocks and Hydraulic Integrated Circuits. They fit the same cavities as the 4CK pilot-to-open check valves, so care should be taken when selecting the valve.

Sectional view

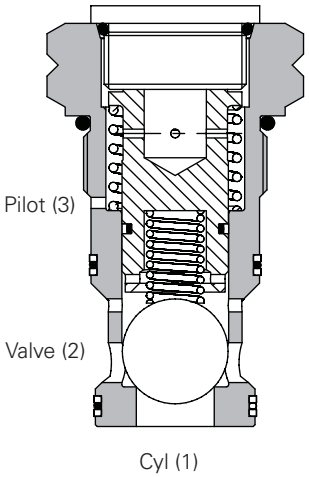

Performance data

Ratings and specifications

Figures based on oil temperature of 40° C and viscosity of 32 cSt (150 SUS)	
Rated flow	250 L/min (65 USgpm)
Maximum pressure	350 bar (5000 psi)
Pilot ratio	2:1
Cartridge material	Working parts hardened and ground steel. Zinc nickel plated body
Standard housing material	Standard aluminum (up to 210 bar*). Add suffix "377" for steel option
Mounting position	Unrestricted
Cavity number	A6935
Torque cartridge into cavity	150 Nm (110 lbs. ft.)
Weight	0.28 kg (0.62 lbs)
Seal kit number	SK834 (Nitrile) SK834V (Viton®)
Recommended Filtration level	BS5540/4 Class 18/13 (25 micron nominal)
Operating temperature	–30° to +90°C (-22° to +194°F)
Leakage	0.3 ml/min nominal (5 dpm)
Nominal viscosity range	5 to 500 cSt

Viton is a registered trademark of E. I. DuPont

Description

Pilot to close check valves allow flow to pass in one direction, with a low pressure drop to prevent reverse flow. When the pilot pressure is applied, flow is prevented in either direction. The pilot ratio of 2:1 allows a lower pressure in the pilot line to hold the valve closed.

The 5CK series are check cartridges ideally suited for fitting directly onto a cylinder. They are ideal for use in regenerative circuits, accumulator dump circuits and in control of cylinders or motors.

Pressure drop

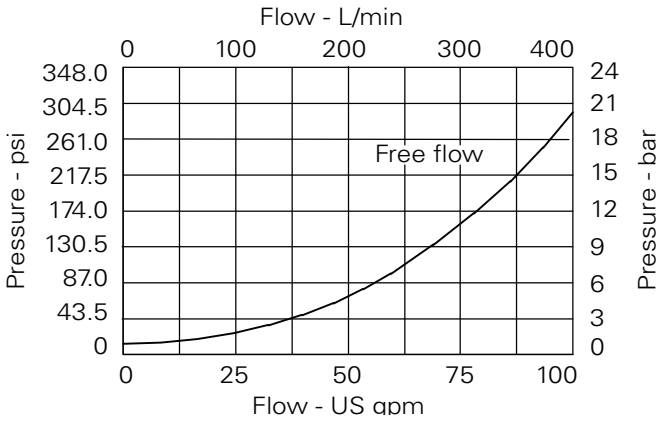

Where measurements are critical request certified drawings. We reserve the right to change specifications without notice.

5CK300 - Check valve

Pilot-to-close, ball type
250 L/min (65 USgpm) • 350 bar (5000 psi)

Model code

5CK* 1 – 10W – S 2**

1 2 3 4 5

1 Basic code

5CK300 - Cartridge only
5CK350 - Cartridge & body

2 Pilot port size

1 - Internal
Omit for line valves

3 Port size - bodied valves only

Code	Port size	Housing number- body only	
		Aluminum	Steel
10W	1 1/4" BSP 1/4" BSP/SAE Pilot Port	B6814	B8610
20T	1 1/4" SAE 1/4" BSP/SAE Pilot Port	B10630	B11474

4 Seals

S - Nitrile (for use with most industrial hydraulic oils)
SV - Viton (for high temperature and most special fluid applications)

5 Pilot ratio

2 - 2:1

Dimensions

mm (inch)

Cartridge only

Basic code
5CK300

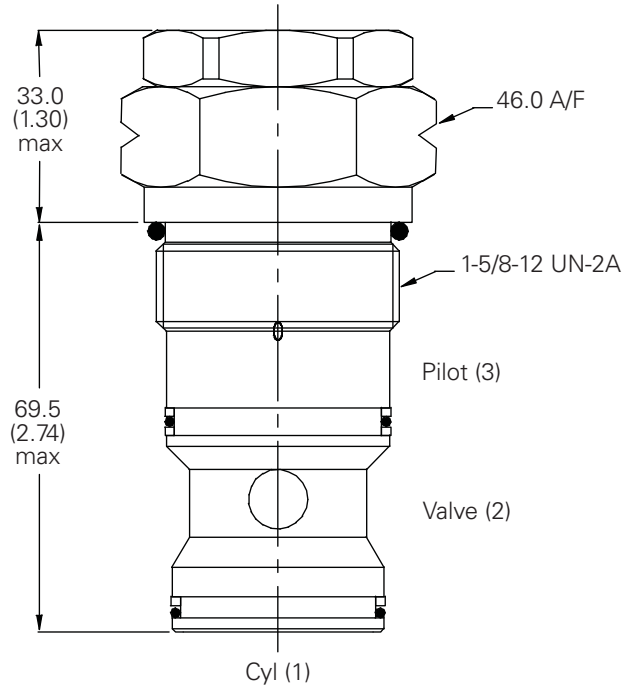

Single valve

1 1/4" Ports
Basic code
5CK350

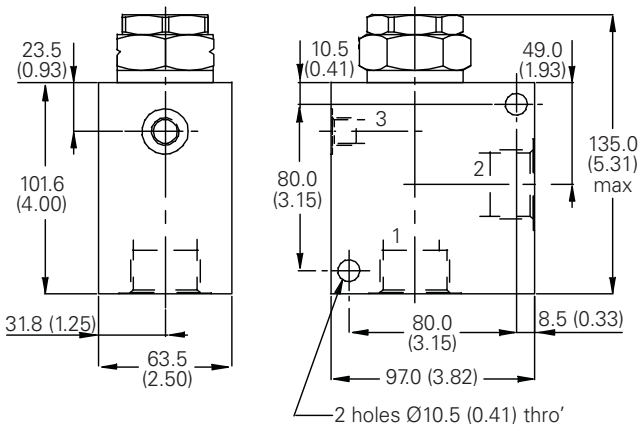

Note: For applications above 210 bar (3000 psi) please consult our technical department or use the steel body option.

G

Where measurements are critical request certified drawings. We reserve the right to change specifications without notice.

1SH10 - Shuttle valve

Ball type
20 L/min (5 USgpm) 350 bar (5000 psi)

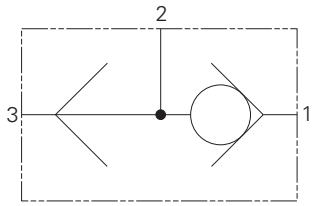

Operation

When a higher pressure is sensed at inlet 1 than at inlet 2 the ball within the cartridge is forced against a seat opening the higher pressure to outlet. When the higher pressure appears at inlet 2 the ball is forced against the other seat which blocks inlet 1 and opens up inlet 2 to outlet.

Features

Cartridge design enabling speedy servicing when mounted in a body or in a composite manifold.

Sectional view

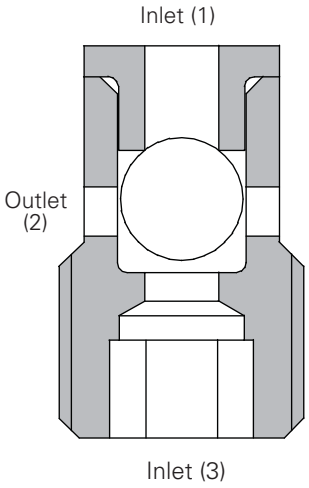

Performance data

Ratings and specifications

Figures based on: Oil Temp = 40°C Viscosity = 32 cSt (150 SUS)	
Rated flow	20 L/min (5 USgpm)
Max Pressure	350 bar (5000 psi)
Cartridge Material	Working parts hardened and ground steel. External steel surfaces zinc plated
Mounting position	Unrestricted
Cavity Number	A16927 (See Section M)
Torque Cartridge into Cavity	8-10 Nm (Use Loc-Tite 542)
Weight	0.05 kg (0.11 lbs)
Recommended Filtration level	BS5540/4 Class 18/13 (25 micron nominal)
Operating Temp	-30°C to +90°C (-22° to +194°F)
Leakage	0.6 milliliters/min max
Nominal Viscosity Range	5 to 500 cSt

Description

This valve provides a means of sensing the higher pressures between two lines on a hydraulic circuit allowing this line to be used for an auxiliary function such as the removal of a mechanically applied brake, the operation of a gauge or to give a remote pressure sensing line for the control of a separate valve.

Pressure drop

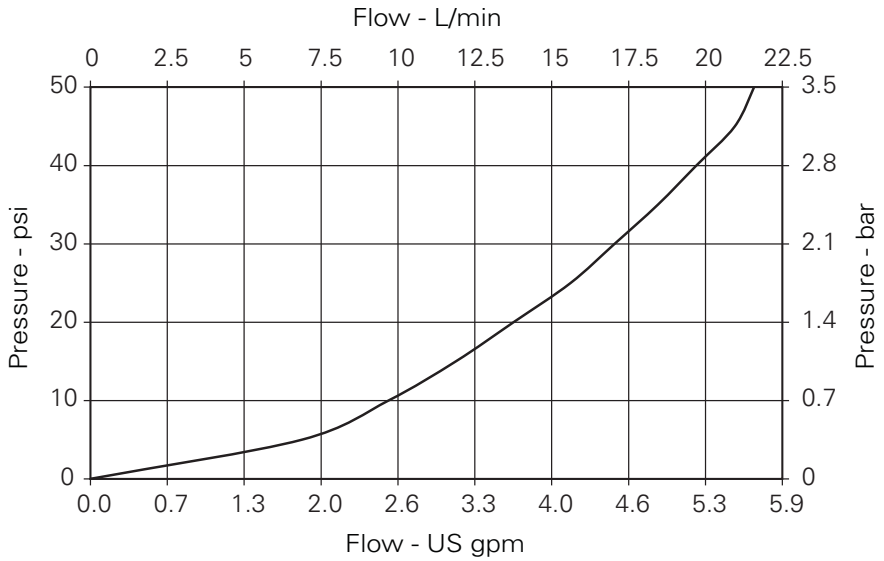

Where measurements are critical request certified drawings. We reserve the right to change specifications without notice.

1SH10 - Shuttle valve

Ball type
20 L/min (5 USgpm) 350 bar (5000 psi)

Model code

1SH10

1

1 Basic code
1SH10 - Cartridge Only

Dimensions

mm (inch)

Cartridge only

Basic code
1SH10

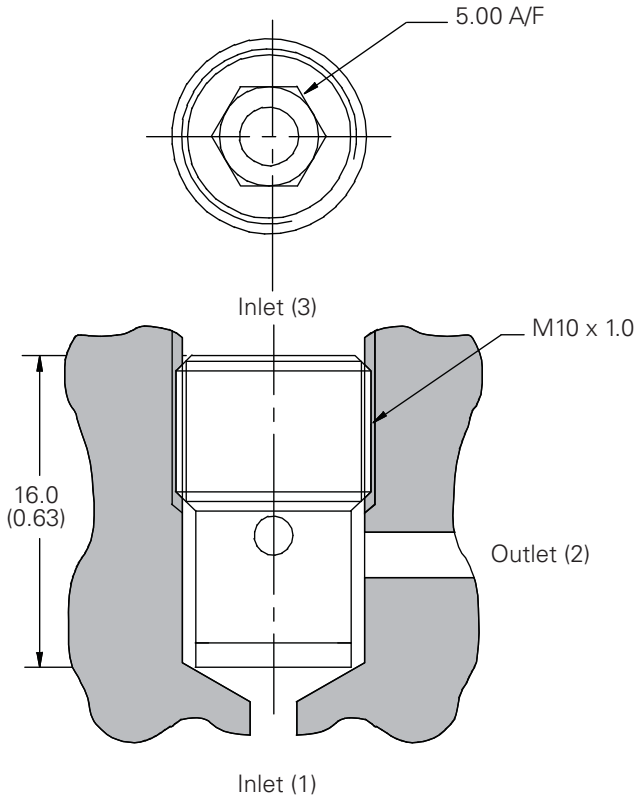

Note: Using LOC-TITE 542, torque cartridge to 8-10 Nm against the bottom of the cavity.

G

1SH60 - Shuttle Valve

Ball type
50 L/min (13 USgpm) 350 bar (5000 psi)

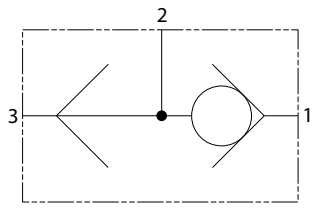

Operation

When a higher pressure is sensed at inlet 1 than at inlet 2 the ball within the cartridge is forced against a seat opening the higher pressure to outlet. When the higher pressure appears at inlet 2 the ball is forced against the other seat which blocks inlet 1 and opens up inlet 2 to outlet.

Features

Cartridge design enabling speedy servicing when mounted in a body or in a composite manifold.

Sectional view

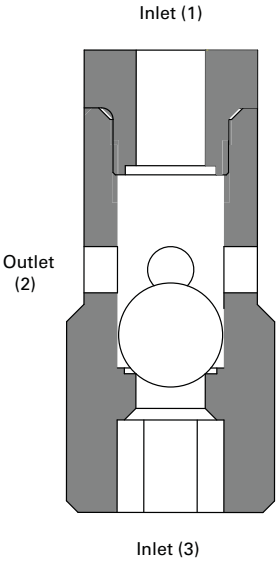

Performance data

Ratings and specifications

Figures based on: Oil Temp = 40°C Viscosity = 32 cSt (150 SUS)	
Rated flow	50 L/min (13 USgpm)
Max Pressure	350 bar (5000 psi)
Cartridge Material	Working parts hardened and ground steel. External steel surfaces zinc plated.
Mounting position	Unrestricted
Cavity Number	C-I-M18-3
Torque Cartridge into Cavity	50 Nm (Use Loc-Tite 603)
Weight	0.04 kg (0.09 lbs)
Recommended Filtration level	BS5540/4 Class 18/13 (10 micron nominal)
Operating Temp	-40°C to +120°C (-40° to +248°F)
Leakage	<5 drops/min @210 bar
Nominal Viscosity Range	5 to 500 cSt

Description

This valve provides a means of sensing the higher pressures between two lines on a hydraulic circuit allowing this line to be used for an auxiliary function such as the removal of a mechanically applied brake, the operation of a gauge or to give a remote pressure sensing line for the control of a separate valve.

Pressure drop

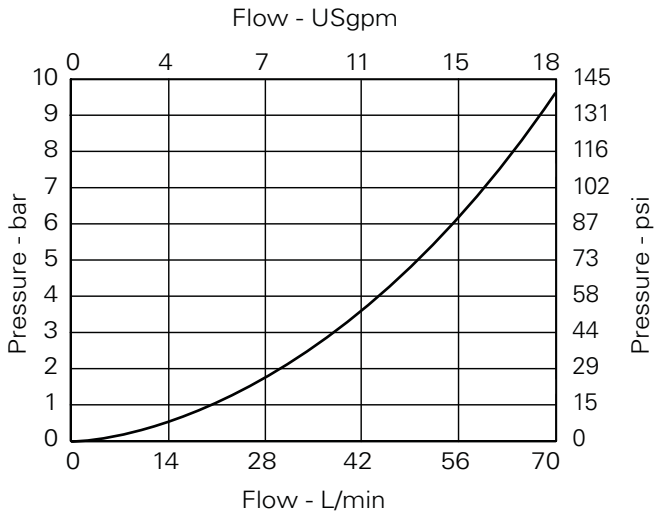

Where measurements are critical request certified drawings. We reserve the right to change specifications without notice.

Model code

1SH10

1

1 Basic code

1SH60 - Cartridge Only

Dimensions

mm (inch)

Cartridge only

Basic code
1SH60

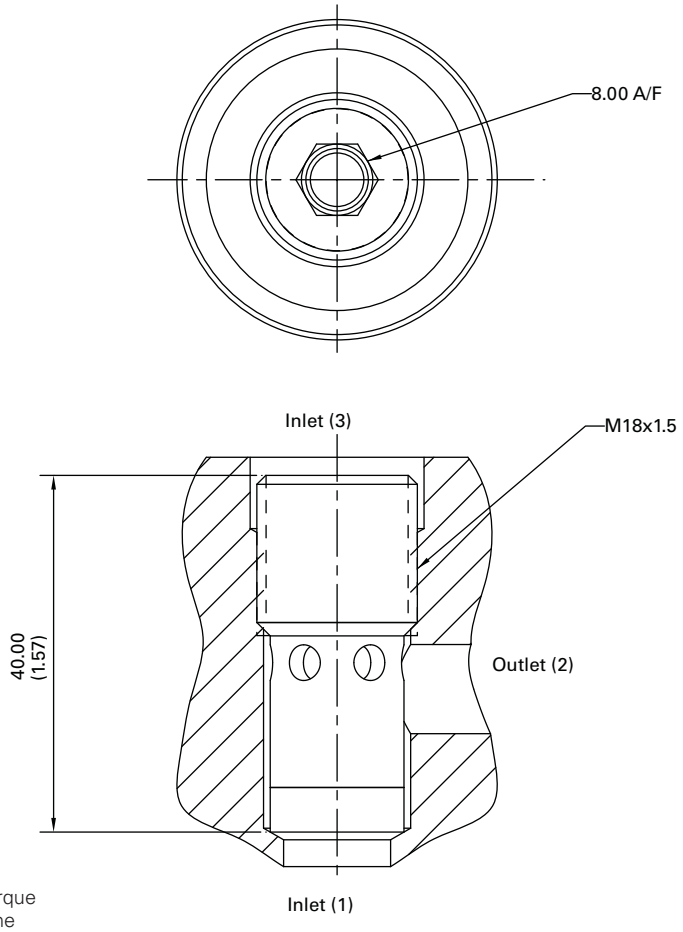

1SH60

Note: Using LOC-TITE 603, torque cartridge to 8-10 Nm against the bottom of the cavity.

G

DSV1-10 - Shuttle valve

Ball type
23 L/min (6 USgpm) • 210 bar (3000 psi)

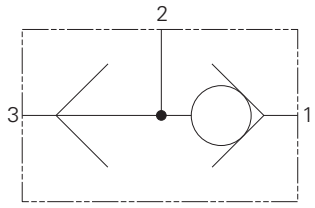

Operation

When a higher pressure is sensed at inlet 1 than at inlet 2 the ball within the cartridge is forced against a seat opening the higher pressure to outlet.

When the higher pressure appears at inlet 2 the ball is forced against the other seat which blocks inlet 1 and opens up inlet 2 to outlet.

Features

Cartridge design enabling speedy servicing when mounted in a body or in a composite manifold.

Sectional view

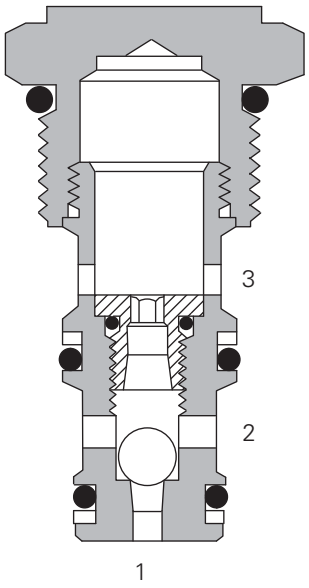

Performance data

Ratings and specifications

Performance data is typical with fluid at 21,8 cSt (105 SUS) and 49°C (120°F)	
Maximum pressure	210 bar (3000 psi)
Cartridge fatigue pressure (infinite life)	210 bar (3000 psi)
Rated flow	23 L/min (6 USgpm)
Internal leakage	Between ports 2 to 1, and 2 to 3 <5 drops/min @ 210 bar (3000 psi)
Cavity	C-10-3
Temperature range	-40°C to +120°C (-40° to + 248°F)
Fluids	All general purpose hydraulic fluids such as MIL-H-5606, SAE 10, SAE 20, etc.
Filtration	Cleanliness code 18/**16/13**
Standard housing materials	Aluminum
Weight cartridge only	0,08 kg (0.18 lbs)
Seal kits	565804 (Buna-N) 889599 (Viton®)

Viton is a registered trademark of E. I. DuPont

Description

This valve provides a means of sensing the higher pressures between two lines on a hydraulic circuit allowing this line to be used for an auxiliary function such as the removal of a mechanically applied brake, the operation of a gauge or to give a remote pressure sensing line for the control of a separate valve.

Pressure drop

Cartridge only

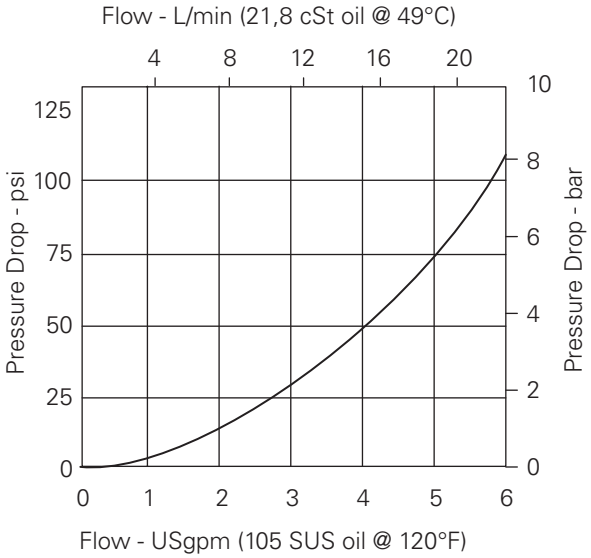

Where measurements are critical request certified drawings. We reserve the right to change specifications without notice.

DSV1-10 - Shuttle valve

Ball type
23 L/min (6 USgpm) • 210 bar (3000 psi)

Model code

DSV1	– 10	(V) –	B	**	00
1	2	3	4	5	6

1 Function
DSV1 - Shuttle Valve

2 Size
10 - 10 Size

3 Seals
Blank - Buna-N
V - Viton

4 Style
B - Ball Type

5 Port size

Code	Port size	Housing number - body only	
		Aluminum light duty	Steel fatigue rated
0	Cartridge only	-	-
3B	3/8" BSPP	02-173358	-
6T	SAE 6	566162	-
2G	1/4" BSPP	-	876705
3G	3/8" BSPP	-	876714
6H	SAE 6	-	876704
8H	SAE 8	-	876711

See section J for housing.

6 Special features
00 - None
(Only required if valve has special features, omitted if "00.")
SS - 316 Stainless Steel external components

Dimensions
mm (inch)

Note: Torque cartridge in Aluminum or Steel housing 47-54 Nm (35-40 ft. lbs).

Cartridge only

Basic code
DSV3-10

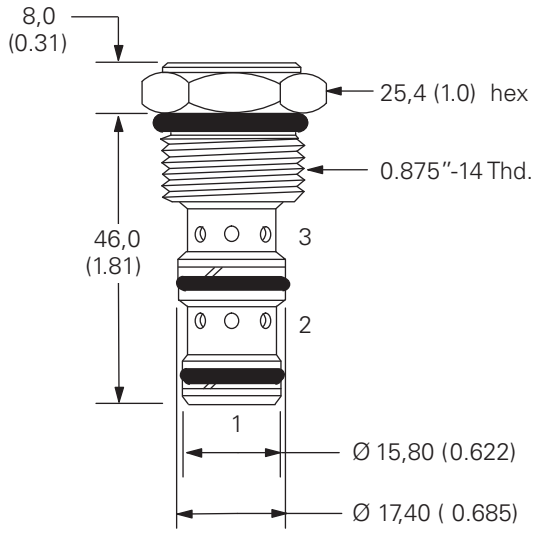

Installation drawing

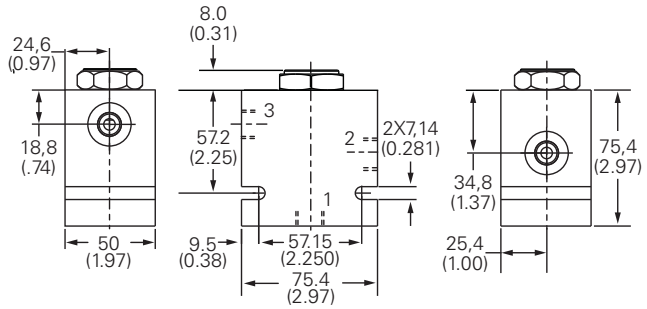

G

Where measurements are critical request certified drawings. We reserve the right to change specifications without notice.

DSV2-4 - Shuttle valve

Ball type
3 L/min (0.75 USgpm) • 240 bar (3500 psi)

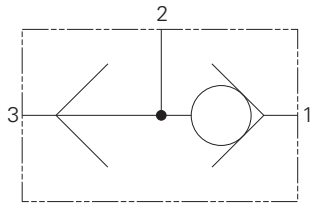

Operation

When a higher pressure is sensed at inlet 1 than at inlet 2 the ball within the cartridge is forced against a seat opening the higher pressure to outlet.

When the higher pressure appears at inlet 2 the ball is forced against the other seat which blocks inlet 1 and opens up inlet 2 to outlet.

Features

Cartridge design enabling speedy servicing when mounted in a body or in a composite manifold.

Sectional view

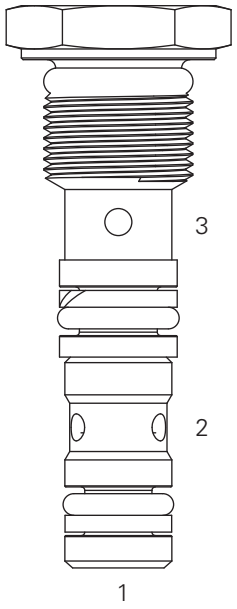

Performance data

Ratings and Specifications

Performance data is typical with fluid at 21,8 cSt (105 SUS) and 49°C (120°F)	
Typical application pressure (all ports)	240 bar (3500 psi) steel housing
Cartridge fatigue pressure (infinite life)	240 bar (3500 psi)
Rated flow	3 L/min (0.75 USgpm)
Internal leakage	Between ports 2 and 1, and 2 and 3 <5 drops/min maximum @ 240 bar (3500 psi)
Cavity	C-4-3
Temperature range	-40°C to +120°C (-40° to + 248°F)
Fluids	All general purpose hydraulic fluids such as MIL-H-5606, SAE 10, SAE 20, etc.
Filtration level	Cleanliness code 18/**16/13**
Weight cartridge only	0,02 kg (0.044 lbs)
Seal kits	9900176-000 (Buna-N) 9900177-000 (Viton®)

Viton is a registered trademark of E. I. DuPont

Description

This valve provides a means of sensing the higher pressures between two lines on a hydraulic circuit allowing this line to be used for an auxiliary function such as the removal of a mechanically applied brake, the operation of a gauge or to give a remote pressure sensing line for the control of a separate valve.

Note: This valve is intended for application as a load sense shuttle valve in load sensing systems

Where measurements are critical request certified drawings. We reserve the right to change specifications without notice.

DSV2-4 - Shuttle valve

Ball type
3 L/min (0.75 USgpm) • 240 bar (3500 psi)

Model code

DSV2 – 4 (V) – B – (*) – 0 – 00

1 2 3 4 5 6 7

1 Function
DSV2 - Shuttle Valve

2 Size
4 - 4 Size

3 Seals
Blank - Buna-N
V - Viton

4 Style
B - Ball

5 Valve housing material
Omit for cartridge only
A - Aluminum
S - Steel

6 Port size
O - Cartridge Only

7 Special features
00 - None
(Only required if valve has special features, omitted if "00")

Dimensions

mm (inch)

Cartridge only

Basic code
DSV2-4

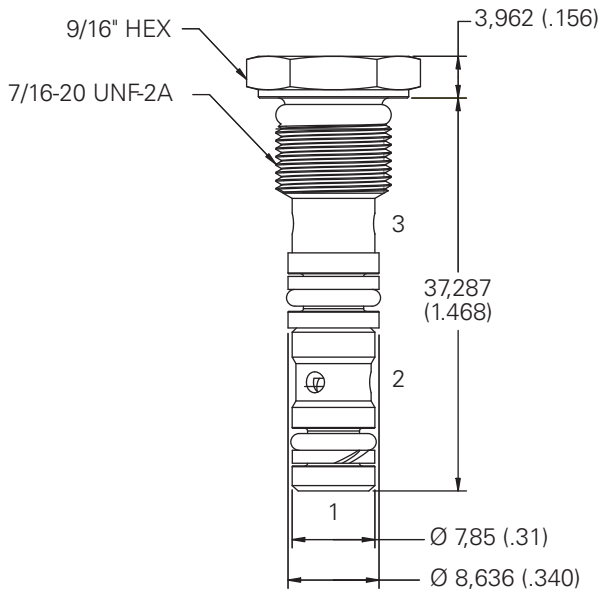

Note: Torque cartridge in aluminum or steel housing 8.1-13.6 Nm (6-10 ft lbs).

⚠ Aluminum housings can be used for pressures up to 210 bar (3000 psi). Steel housings must be used for operating pressures above 1210 bar (3000 psi).

G

Where measurements are critical request certified drawings. We reserve the right to change specifications without notice.

DSV2-8 - Shuttle valve

Ball type
23 L/min (6 USgpm) • 240 bar (3500 psi)

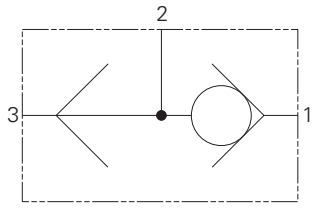

Operation

When a higher pressure is sensed at inlet 1 than at inlet 2 the ball within the cartridge is forced against a seat opening the higher pressure to outlet.

When the higher pressure appears at inlet 2 the ball is forced against the other seat which blocks inlet 1 and opens up inlet 2 to outlet.

Features

Cartridge design enabling speedy servicing when mounted in a body or in a composite manifold.

Sectional view

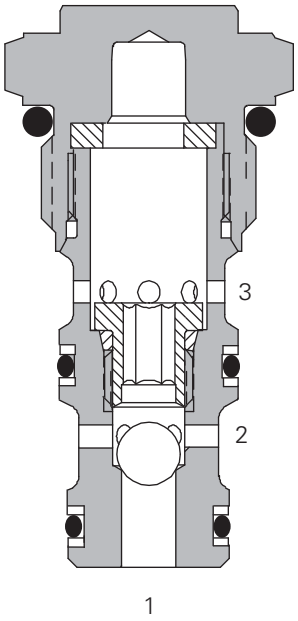

Description

This valve provides a means of sensing the higher pressures between two lines on a hydraulic circuit allowing this line to be used for an auxiliary function such as the removal of a mechanically applied brake, the operation of a gauge or to give a remote pressure sensing line for the control of a separate valve.

Note: This valve is intended for application as a load sense shuttle valve in load sensing systems

Performance data

Ratings and specifications

Performance data is typical with fluid at 21,8 cSt (105 SUS) and 49°C (120°F)	
Typical application pressure (all ports)	240 bar (3500 psi) steel housing
Cartridge fatigue pressure (infinite life)	240 bar (3500 psi)
Rated flow	23 L/min (6 USgpm)
Internal leakage	Between ports 2 and 1, and 2 and 3 <5 drops/min maximum @ 240 bar (3500 psi)
Cavity	C-8-3
Standard housing materials	Aluminum or steel
Temperature range	-40°C to +120°C (-40° to + 248°F)
Fluids	All general purpose hydraulic fluids such as MIL-H-5606, SAE 10, SAE 20, etc.
Filtration level	Cleanliness code 18/**16/13**
Weight cartridge only	0,06 kg (0.14 lbs)
Seal kits	02-160755 (Buna-N) 02-160756 (Viton®)

Viton is a registered trademark of E. I. DuPont

Pressure drop

Cartridge only

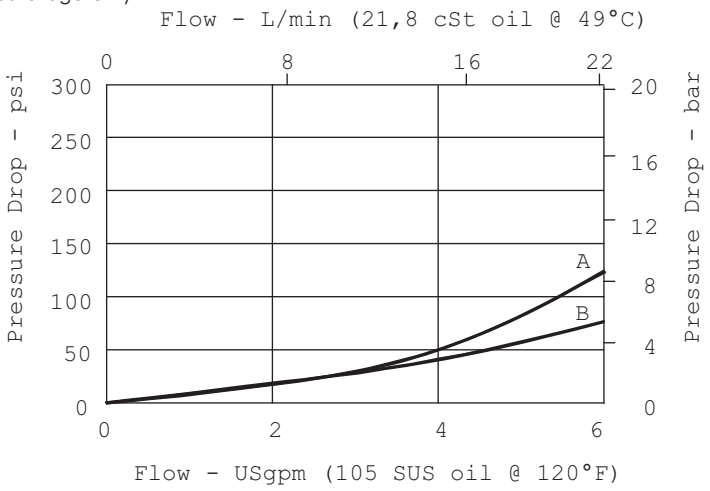

A - Port 1 to port 2

B - Port 3 to port 2

Where measurements are critical request certified drawings. We reserve the right to change specifications without notice.

DSV2-8 - Shuttle valve

Ball type
23 L/min (6 USgpm) • 240 bar (3500 psi)

Model code

DSV2 – 8 (V) – B – (*) – ** – 00

1 2 3 4 5 6 7

1 Function
DSV2 - Shuttle Valve

2 Size
8 - 8 Size

3 Seals
Blank - Buna-N
V - Viton

4 Style
B - Ball

5 Valve housing material
Omit for cartridge only
A - Aluminum
S - Steel

6 Port size

Code	Port size	Housing number - body only	
		Aluminium fatigue rated	Steel fatigue rated
4T	SAE 4	02-160741	02-160745
6T	SAE 6	02-160742	02-160746
2G	1/4" BSPP	02-160739	02-160743
3G	3/8" BSPP	02-160740	02-160744

7 Special features
00 - None
(Only required if valve has special features, omitted if "00")

SS - 316TI Stainless Steel External components

Dimensions
mm (inch)

Cartridge only
Basic code
DSV2-8

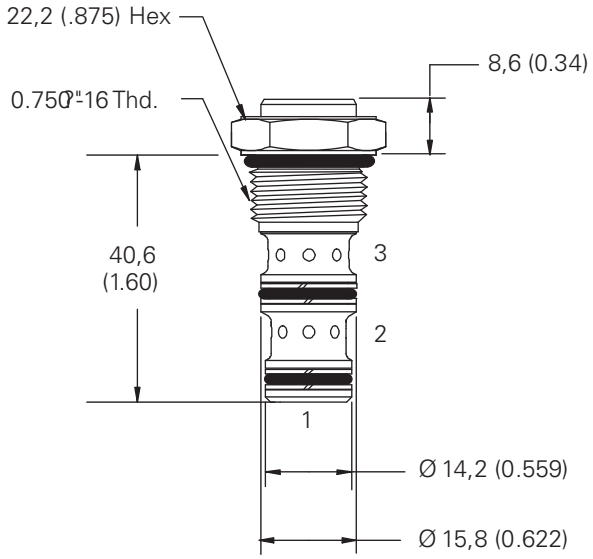

Note: Torque cartridge in aluminum or steel housing 34-41 Nm (25-30 ft lbs).

⚠ Aluminum housings can be used for pressures up to 210 bar (3000 psi). Steel housings must be used for operating pressures above 1210 bar (3000 psi).

Installation drawing (Steel)

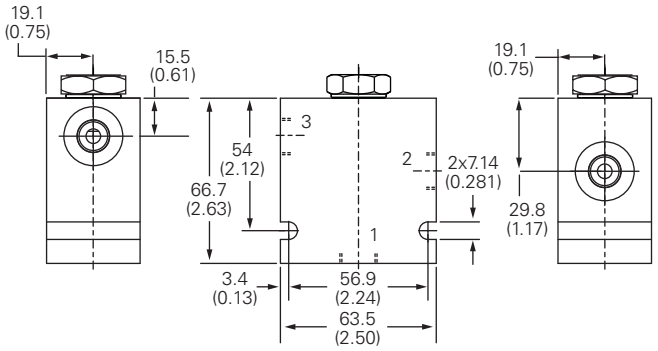

G

Where measurements are critical request certified drawings. We reserve the right to change specifications without notice.

DSV3 ** B - Shuttle valve

Ball type, in-line housing
Up to 170 L/min (45 USgpm) • 350 bar (5000 psi)

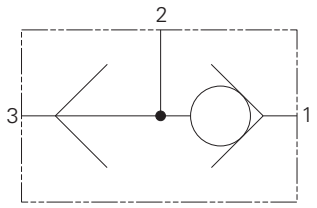

Operation

When a higher pressure is sensed at inlet 1 than at inlet 2 the ball within the cartridge is forced against a seat opening the higher pressure to outlet.

When the higher pressure appears at inlet 2 the ball is forced against the other seat which blocks inlet 1 and opens up inlet 2 to outlet.

Sectional view

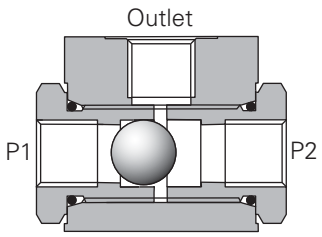

Performance data

Ratings and specifications

Performance data is typical with fluid at 21,8 cSt (105 SUS) and 49°C (120°F)			
Maximum pressure			210 bar (3000 psi) Aluminum housing 350 bar (5000 psi) Steel housing
Rated flow			6 series - 11 L/min (3 USgpm) 8 series - 24,6 L/min (6.5 USgpm) 12 series - 88,9 L/min (23.5 USgpm) 16 series - 170,3 L/min (45 USgpm)
Internal leakage			Between ports 2 to 1, and 2 to 3 <5 drops/min @ 210 bar (3000 psi)
Temperature range			-40°C to +120°C (-40° to + 248°F)
Fluids			All general purpose hydraulic fluids such as MIL-H-5606, SAE 10, SAE 20, etc.
Filtration			Cleanliness code 18/**16/13**
Standard housing materials			Aluminum or steel
Weight	6 series	w/aluminum housing	0,10 kg (0.22 bs)
		w/steel housing	0,30 kg (0.66 lbs)
	8 series	w/aluminum housing	0,28 kg (0.62 lbs)
		w/steel housing	0,90 kg (1.86 lbs)
	12 series	w/aluminum housing	0,75 kg (1.65 lbs)
		w/steel housing	2,25 kg (4.95 lbs)
	16 series	w/aluminum housing	1,76 kg (3.86 lbs)
		w/steel housing	5,25 kg (11.58 lbs)
Seals (2 required)	6 series		154128 (Buna-N) / 396096 (Viton®)
	8 series		154129 (Buna-N) / 396098 (Viton®)
	12 series		154131 (Buna-N) / 396102 (Viton®)
	16 series		154132 (Buna-N) / 396105 (Viton®)

Viton is a registered trademark of E. I. DuPont

Description

This valve provides a means of sensing the higher pressures between two lines on a hydraulic circuit allowing this line to be used for an auxiliary function such as the removal of a mechanically applied brake, the operation of a gauge or to give a remote pressure sensing line for the control of a separate valve.

Pressure drop

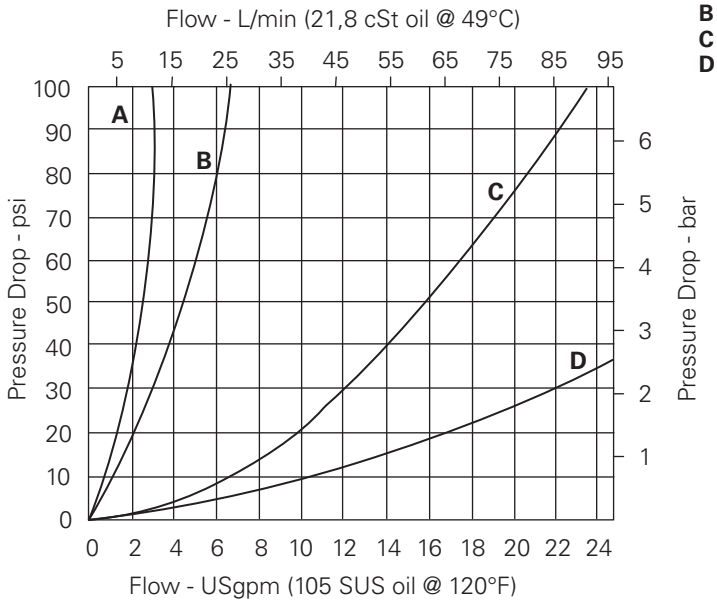

A - 6-Series
B - 8-Series
C - 12-Series
D - 16-Series

Where measurements are critical request certified drawings. We reserve the right to change specifications without notice.

DSV3 ** B - Shuttle valve

Ball type, in-line housing
Up to 170 L/min (45 USgpm) • 350 bar (5000 psi)

Model code

DSV3 – ** (V) – B – ** – ***

1 2 3 4 5 6

1 Function
DSV3 - Shuttle Valve

2 Size
6 - 6 Size
8 - 8 Size
12 - 12 Size
16 - 16 Size

3 Seals
Blank - Buna-N
V - Viton

4 Style
B - Ball

5 Housing material
A - Aluminum
S - Steel

6 Port size
6 Series
1 - 1/8" NPTF
8 Series
2 - 1/4" NPTF
6T - SAE 6
12 Series
4 - 1/2' NPTF
8T - SAE 8
16 Series
6 - 3/4" NPTF
12T - SAE 12

Dimensions

mm (inch)

Cartridge only

Basic code
DSV3

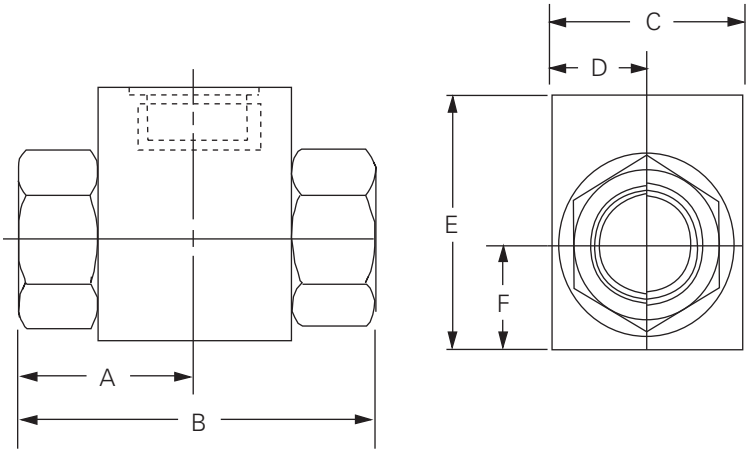

⚠ Aluminum housings can be used for pressures up to 210 bar (3000 psi). Steel housings must be used for operating pressures above 210 bar (3000 psi).

Model number	A	B	C	D	E	F
DSV3-6-B-A1	22,2 (0.87)	44,5 (1.75)	19,0 (0.75)	9,5 (0.37)	25,4 (1.00)	9,5 (0.37)
DSV3-6-B-S1	22,2 (0.87)	44,5 (1.75)	20,6 (0.81)	10,3 (0.41)	31,7 (1.25)	12,7 (0.50)
DSV3-8-B-A2	23,8 (0.94)	47,6 (1.87)	25,4 (1.00)	12, 7 (0.50)	38,1 (1.50)	12,7 (0.50)
DSV3-8-B-S2	23,8 (0.94)	47,6 (1.87)	31,7 (1.25)	15,9 (0.63)	43,7 (1.72)	15,9 (0.63)
DSV3-8-B-A6T	23,8 (0.94)	47,6 (1.87)	25,4 (1.00)	12, 7 (0.50)	38,1 (1.50)	12,7 (0.50)
DSV3-8-B-S6T	23,8 (0.94)	47,6 (1.87)	31,7 (1.25)	15,9 (0.63)	43,7 (1.72)	15,9 (0.63)
DSV3-12-B-A4	31,7 (1.25)	63,5 (2.5)	38,1 (1.50)	19,1 (0.75)	50,8 (2.00)	19,1 (0.75)
DSV3-12-B-S4	31,7 (1.25)	63,5 (2.5)	43,7 (1.72)	21,8 (0.86)	57,5 (2.25)	22,2 (0.88)
DSV3-12-B-A8T	31,7 (1.25)	63,5 (2.5)	38,1 (1.50)	19,1 (0.75)	50,8 (2.00)	19,1 (0.75)
DSV3-12-B-S8T	31,7 (1.25)	63,5 (2.5)	43,7 (1.72)	21,8 (0.86)	57,5 (2.25)	22,2 (0.88)
DSV3-16-B-A6	47,6 (1.88)	95,3 (3.75)	47,6 (1.88)	23,8 (0.94)	63,5 (2.50)	23,8 (0.97)
DSV3-16-B-S6	47,6 (1.88)	95,3 (3.75)	50,0 (1.97)	25,0 (0.98)	62,7 (2.47)	25,4 (1.00)
DSV3-16-B-A12T	47,6 (1.88)	95,3 (3.75)	47,6 (1.88)	23,8 (0.94)	63,5 (2.50)	23,8 (0.97)
DSV3-16-B-S12T	47,6 (1.88)	95,3 (3.75)	50,0 (1.97)	25,0 (0.98)	62,7 (2.47)	25,4 (1.00)

Where measurements are critical request certified drawings. We reserve the right to change specifications without notice.

Problem:

Looking for leak-free performance?

Solution:

Get Eaton's Vickers® NZ cylinders with SureSeal™ sealing system!



EATON
Powering Business Worldwide

Performance when you need it.

Infrastructure projects require hard working equipment in demanding applications. **You can't afford downtime.** Install Eaton's NZ cylinders with SureSeal™ sealing system to keep your project running.

© 2009 Eaton Corporation

- Advanced SureSeal™ sealing system
- No "metal to metal" contact due to wear bands
- Up to 3000 psi
- Up to 8" bore
- Quick delivery
- Easy-to-remove rod cartridge

Problem:

Rusty valves slowing your process line?

Solution:

Get Eaton's stainless steel screw-in cartridge valves



EATON
Powering Business Worldwide

Performance where you need it.

Food process lines require continuous operation in demanding environments. Cleaning and caustic washdowns also take a toll on equipment. **Keep it running with Eaton's stainless steel screw-in cartridge valves.**

- Corrosion resistant valves and coils
- Caustic wash resistant
- Up to 350 bar (5000 psi)
- Industry leading selection

© 2009 Eaton Corporation

G

Where measurements are critical request certified drawings. We reserve the right to change specifications without notice.

Flow controls

FLow control functions for applications up to 350 bar (5000 psi) and 350 L/min (92 USgpm)



Powering Business Worldwide

Flow controls

FLOW CONTROLS....H-4
ADJUSTMENTS....H-8
FR5-8 - FLOW REGULATOR....H-10
FR5-10 - FLOW REGULATOR....H-12
FR1-16 - FLOW REGULATOR....H-14
FR1-20 - FLOW REGULATOR....H-16
FR2-10 - FLOW REGULATOR....H-18
FR2-16 - FLOW REGULATOR....H-20
2CFRC60 - FLOW REGULATOR....H-22
FAR1-10 - FLOW REGULATOR....H-24
FAR1-12 - FLOW REGULATOR....H-26
FAR1-16 - FLOW REGULATOR....H-28
PFR2-10 - FLOW REGULATOR....H-30
PFR5-8 - FLOW REGULATOR....H-32
PFR5-10 - FLOW REGULATOR....H-34
PFR15-10 - FLOW REGULATOR....H-36
PFR11-12 - FLOW REGULATOR....H-38
PFR11-16 - FLOW REGULATOR....H-40
2CFP60 - FLOW REGULATOR....H-42
PFR12-10 - FLOW REGULATOR....H-44
PFR12-12 - FLOW REGULATOR....H-46
PFR2-16 - FLOW REGULATOR....H-48
PFR12-16 - FLOW REGULATOR....H-50
PFRD/S-12 - PRIORITY FLOW CONTROL....H-52
PFRD/S-16 - PRIORITY FLOW CONTROL....H-54
PFRD/S-20 - PRIORITY FLOW CONTROL....H-56
MRV2-10 - FLOW RESTRICTOR VALVE....H-58
MRV2-16 - FLOW RESTRICTOR VALVE....H-60
2CR80 - FLOW RESTRICTOR VALVE....H-62
NV1-8 - FLOW RESTRICTOR VALVE....H-64
NV1-10 - FLOW RESTRICTOR VALVE....H-66
NV1-16 - FLOW RESTRICTOR VALVE....H-68
NV1-20 - FLOW RESTRICTOR VALVE....H-70
FCV7-10 - FLOW RESTRICTOR VALVE....H-72
FCV11-12 - FLOW RESTRICTOR VALVE....H-74
FCV6-16 - FLOW RESTRICTOR VALVE....H-76
PCS3-10 - PRESSURE COMPENSATOR....H-78
PCS13-10 - PRESSURE COMPENSATOR....H-80
PCS3-12 - PRESSURE COMPENSATOR....H-82
PCS13-12 - PRESSURE COMPENSATOR....H-84
PCS3-16 - PRESSURE COMPENSATOR....H-86
PCS13-16 - PRESSURE COMPENSATOR....H-88
PCS3-20 - PRESSURE COMPENSATOR....H-90
PCS4-10 - PRESSURE COMPENSATOR....H-92
PCS14-10 - PRESSURE COMPENSATOR....H-94
PCS4-12 - PRESSURE COMPENSATOR....H-96
PCS14-12 - PRESSURE COMPENSATOR....H-98
PCS4-16 - PRESSURE COMPENSATOR....H-100
PCS14-16 - PRESSURE COMPENSATOR....H-102
PCS4-20 - PRESSURE COMPENSATOR....H-104
2FPH - FLOW REGULATOR....H-106
VF11-10 - VELOCITY FUSE....H-110
VF1-16 - VELOCITY FUSE....H-112
FDC1-16 - FLOW DIVIDER/COMBINER....H-114
FDC11-16 - FLOW DIVIDER/COMBINER....H-116
2CFD50 - FLOW DIVIDER/COMBINER....H-118
2CFD200 - FLOW DIVIDER/COMBINER....H-120
FDC1-20 - FLOW DIVIDER/COMBINER....H-122
FDC3-16 - FLOW DIVIDER/COMBINER....H-124
FDC3-20 - FLOW DIVIDER/COMBINER....H-126

Flow controls

Valve locator

Functional symbol

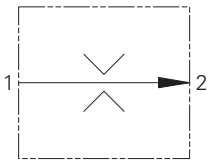

Model	Cavity	Flow rating	Typical pressure	Page
Flow regulator valve, fixed		L/min (USgpm)	bar (psi)	
FR5-8	C-8-2	10 (25)	280 (4000)	H-10
FR5-10	C-10-2	23 (6)	280 (4000)	H-12
FR1-16	C-16-2	114 (30)	210 (3000)	H-14
FR1-20	C-20-2	227 (60)	210 (3000)	H-16

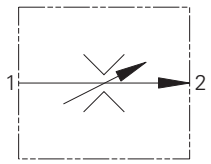

Model	Cavity	Flow rating	Typical pressure	Page
Flow regulator valve, adjustable		L/min (USgpm)	bar (psi)	
FR2-10	C-10-2	38 (10)	210 (3000)	H-18
FR2-16	C-16-2	114 (30)	210 (3000)	H-20

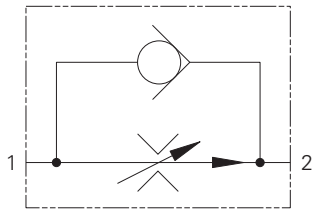

Model	Cavity	Flow rating	Typical pressure	Page
Flow regulator with check		L/min (USgpm)	bar (psi)	
2CFRC60	A7447	4-60 (1-16)	350 (5000)	H-22
FAR1-10	C-10-2	1-38 (0.25-10)	310 (4500)	H-24
FAR1-12	C-12-2(u)	1.5-95 (0.4-25)	310 (4500)	H-26
FAR1-16	C-16-2	3.8-114 (1-30)	310 (4500)	H-28

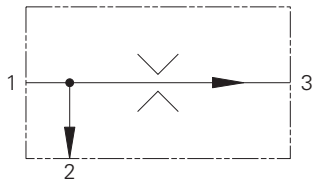

Model	Cavity	Flow rating	Typical pressure	Page
Priority flow regulator, bypass, fixed		L/min (USgpm)	bar (psi)	
PFR5-8	C-8-3	<10 (2.5)	280 (4000)	H-32
PFR5-10	C-10-3	<23 (6)	280 (4000)	H-34
PFR15-10	C-10-3	<38 (10)	350 (5000)	H-36
PFR11-12	C-12-3	<30 (8)	350 (5000)	H-38
PFR11-16	C-16-3	<114 (30)	350 (5000)	H-40

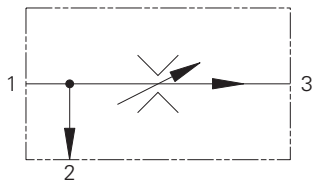

Model	Cavity	Flow rating	Typical pressure	Page
Priority flow regulator, bypass, adjustable		L/min (USgpm)	bar (psi)	
2CFP60	CVA-27-04-0	<60 (16)	350 (5000)	H-42
PFR2-10	C-10-3	<60 (15)	210 (3000)	H-30
PFR12-10	C-10-3	<64 (17)	350 (5000)	H-44
PFR12-12	C-12-3	<45 (12)	350 (5000)	H-46
PFR2-16	C-16-3	<114 (30)	210 (3000)	H-48
PFR12-16	C-16-3	<114 (30)	350 (5000)	H-50

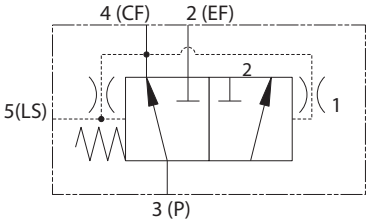

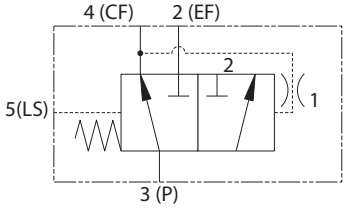

Model	Cavity	Flow rating	Typical pressure	Page
Priority flow regulator		L/min (USgpm)	bar (psi)	
PFRD/S-12	C-12-5S	76 (20)	280 (4000)	H-52
PFRD/S-16	C-16-5S	150 (40)	280 (4000)	H-54
PFRD/S-20	C-20-5S	230 (60)	240 (3500)	H-56

Where measurements are critical request certified drawings. We reserve the right to change specifications without notice.

Functional symbol

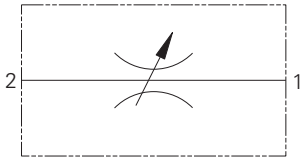

Model	Cavity	Flow rating	Typical pressure	Page
Manual rotary flow restrictor		L/min (USgpm)	bar (psi)	
MRV2-10	C-10-2	<56 (15)	210 (3000)	H-58
MRV2-16	C-16-2	<170.3 (45)	210 (3000)	H-60

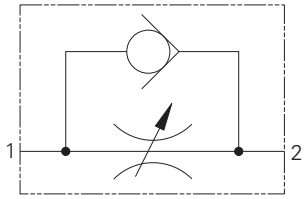

Model	Cavity	Flow rating	Typical pressure	Page
Needle valve		L/min (USgpm)	bar (psi)	
2CR80	A7447	<80 (20)	350 (5000)	H-62

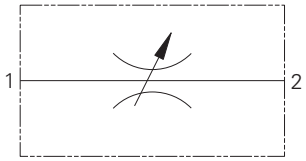

Model	Cavity	Flow rating	Typical pressure	Page
Needle valve		L/min (USgpm)	bar (psi)	
NV1-8	C-8-2	<45 (12)	280 (4000)	H-64
NV1-10	C-10-2	<45 (12)	210 (3000)	H-66
FCV7-10	C-10-2	<45 (12)	210 (3000)	H-72
FCV11-12	C-12-2(u)	<114 (30)	350 (5000)	H-74
FCV6-16	C-16-2	<208 (55)	210 (3000)	H-76

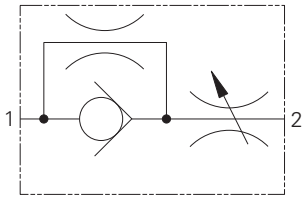

Model	Cavity	Flow rating	Typical pressure	Page
Needle valve		L/min (USgpm)	bar (psi)	
NV1-16	C-16-2	<151 (40)	210 (3000)	H-68
NV1-20	C-20-2	<265 (70)	210 (3000)	H-70

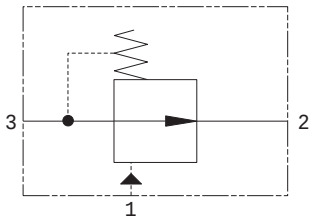

Model	Cavity	Flow rating	Typical pressure	Page
Pressure compensator, restrictive		L/min (USgpm)	bar (psi)	
PCS3-10	C-10-3	<38 (10)	210 (3000)	H-78
PCS13-10	C-10-3	<38 (10)	350 (5000)	H-80
PCS3-12	C-12-3	<58 (15)	240 (3500)	H-82
PCS13-12	C-12-3	<58 (15)	350 (5000)	H-84
PCS3-16	C-16-3	<114 (30)	210 (3000)	H-86
PCS13-16	C-16-3	<114 (30)	350 (5000)	H-88
PCS3-20	C-20-3	<189 (50)	210 (3000)	H-90

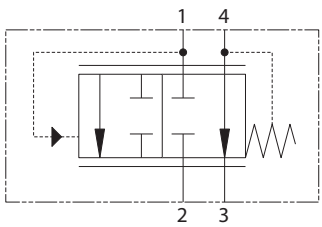

Model	Cavity	Flow rating	Typical pressure	Page
Pressure compensator bypass/priority		L/min (USgpm)	bar (psi)	
PCS4-10	C-10-4	<38 (10)	210 (3000)	H-92
PCS14-10	C-10-4	<38 (10)	350 (5000)	H-94
PCS4-12	C-12-4	<58 (15)	240 (3500)	H-96
PCS14-12	C-12-4	<58 (15)	350 (5000)	H-98
PCS4-16	C-16-4	<114 (30)	210 (3000)	H-100
PCS14-16	C-16-4	<114 (30)	350 (5000)	H-102
PCS4-20	C-20-4	<189 (50)	210 (3000)	H-104

H

Where measurements are critical request certified drawings. We reserve the right to change specifications without notice.

Flow controls

Valve locator

Functional symbol

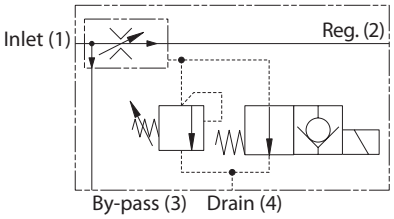

Model	Cavity	Flow rating	Typical pressure	Page
Flow regulator/diverter		L/min (USgpm)	bar (psi)	
2FPH55		<55 (14)	280 (4000)	H-106
2FPH95		<95 (25)	350 (5000)	H-106
2FPH195		<160 (42)	350 (5000)	H-106

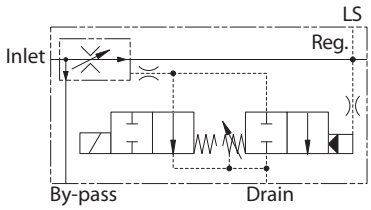

Model	Cavity	Flow rating	Typical pressure	Page
Flow regulator/diverter		L/min (USgpm)	bar (psi)	
2FPH250		<200 (52)	350 (5000)	H-106
2FPH350		<350 (92)	350 (5000)	H-106

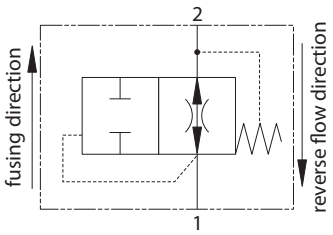

Model	Cavity	Flow rating	Typical pressure	Page
Flow fuse		L/min (USgpm)	bar (psi)	
VF1-10	C-10-2	23 (6)	210 (3000)	H-110
VF11-10	C-10-2	23 (6)	350 (5000)	H-110
VF1-16	C-16-2	114 (30)	210 (3000)	H-112

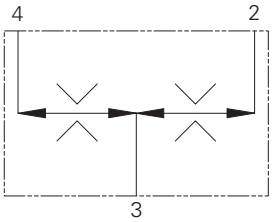

Model	Cavity	Flow rating	Typical pressure	Page
Flow divider/conbiner		L/min (USgpm)	bar (psi)	
FDC1-16	C-16-4	<178 (47)	210 (3000)	H-114
FDC11-16	C-16-4	<140 (37)	350 (5000)	H-116
2CFD50	A12744	<40 (10.5)	350 (5000)	H-118
2CFD200	CVB-42-04-0	<220 (58)	280 (4000)	H-120

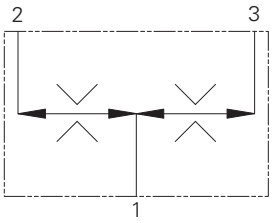

Model	Cavity	Flow rating	Typical pressure	Page
Flow divider/combiner		L/min (USgpm)	bar (psi)	
FDC1-20	Inline	<141 (37)	210 (3000)	H-122

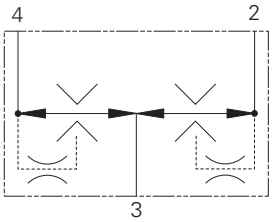

Model	Cavity	Flow rating	Typical pressure	Page
Flow divider/combiner, posi-traction		L/min (USgpm)	bar (psi)	
FDC3-16	C-16-4	<152 (40)	210 (3000)	H-124

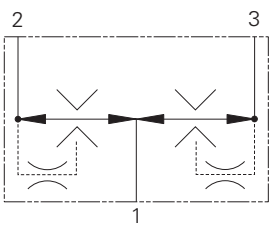

Model	Cavity	Flow rating	Typical pressure	Page
Flow divider/combiner, posi-traction		L/min (USgpm)	bar (psi)	
FDC3-20	Inline	<570 (150)	210 (3000)	H-126

Where measurements are critical request certified drawings. We reserve the right to change specifications without notice.

This section gives basic specifications for the complete line of Eaton's Integrated Hydraulics threaded cartridge flow control valves. Its purpose is to provide a quick, convenient reference tool when choosing cartridge valves or designing a system using these components.

Valve features and benefits

Eaton offers a complete range of Integrated Hydraulics flow controls cartridge valves, with a variety of features, including:

- Products in this catalog have been Fatigue tested to one million cycles at 132% or 10 million cycles at 115% of rated pressure.
- Non-adjustable, pressure compensated, flow regulator for flows to 227 L/min (60 USgpm).
- Adjustable, pressure compensated, flow regulator for flows to 114 L/min (30 USgpm).
- Fixed and adjustable priority bypass type flow regulator for regulated flows to 114 L/min (30 USgpm).
- Adjustable flow control without free reverse flow check with flows rated to 114 L/min (30 USgpm).
- Adjustable flow control with free reverse flow check with flows rated to 45 L/min (12 USgpm).
- Needle valves with flows rated to 265 L/min (70 USgpm).
- Velocity fuses with flows rated to 227 L/min (60 USgpm).
- Flow divider/combiners (FDC1 and FDC11) with flows rated to 568 L/min (150 USgpm).
- Posi-traction valves (FDC13) with flows rated to 567 L/min (150 USgpm)
- Operating pressures to 350 bar (5000 psi).
- Here are some of the benefits of Eaton flow controls:
- All operating parts are hardened steel, ground and honed for long life and low leakage.
- Designed for maximum flexibility and minimal space requirements.
- All exposed cartridge surfaces are zinc dichromate plated to resist corrosion. Steel housings are available for cartridges rated to 350 bar (5000 psi) application pressures.
- All aluminum manifolds are gold anodized to resist corrosion.
- Reliable, economical and compact.
- Low leakage.
- Variety of adjustment options.
- Adjustments designed not to go spring solid at "full in" position or to allow the adjustment to be removed when backed out.

Notable are the two styles of flow divider/combiner:

FDC1/FDC11

The FDC*1 is a cartridge type hydraulic flow divider-combiner valve. It divides and combines flow, regardless of system load or pressure, proportionally per specified flow division.

For example: FDC*1-10-*–66 will divide an incoming flow of 45 L/min (12 USgpm) equally out each port with an accuracy of 10% each side. With 45 L/min (12 USgpm) in at "3" port, flow out port "4" can be 22 L/min (6 USgpm) 4,5 L/min (1.2 USgpm) while flow at port "2" is 22,7 L/min (6 USgpm) 4,5 L/min (1.2 USgpm).

The combining accuracy is the same with incoming flow at port "4" and "2" and flow out port "3" of 45 L/min (12 USgpm). Inlet flow at port "4" will be 22 L/min (6 USgpm) 4,5 L/min (1.2 USgpm). Inlet flow at port "2" will be 22 L/min (6 USgpm) 4,5 L/min (1.2 USgpm).

Flow division or combining will be maintained even if unequal loads are placed on ports "4" and "2".

A special feature of the FDC*1–** is that it provides rephase flow to either port 2 or port 4 when one of the two is blocked. This feature is useful in hydraulic circuits that require cylinders to move at the same time. If one cylinder bottoms out first, the opposite cylinder is provided with "rephase" flow to allow the cylinder to bottom and start the cylinders together for movement in the opposite direction.

FDC3/FDC13

The FDC*3 is a cartridge type positive traction valve that divides and combines flow, regardless of system load or pressure, proportionally per specified flow division.

This valve is used in place of a standard flow divider-combiner in systems where hydraulic motors are used as drive wheels on each side of the machine. The positive traction valve acts much like a standard flow divider-combiner as the vehicle travels in a straight line. Equal amounts of flow go to each "C" port. As the vehicle turns a corner, a standard flow divider will maintain equal flow to each drive motor. On a turn, it is necessary for the outer wheel to turn faster than the inner wheel. A standard flow divider-combiner will provide equal flow to each motor causing the drive motors to skid. The positive traction valve solves this problem by allowing the one motor to turn faster than the other.

This operates in a similar way as a mechanical differential on an automobile. In a turn, the inside drive motor is restricted and builds up pressure, while the outside drive motor is without restriction. Under conditions of high differential pressure, the positive traction valve passes extra flow to the least restricted motor to prevent skidding. Under straight running conditions the differential pressure is low and equal amounts of flow are provided to each drive motor.

⚠ Warning
For pressure over 210 bar (3000 psi) use steel housing.

H

Where measurements are critical request certified drawings. We reserve the right to change specifications without notice.

Adjustments

The adjustment range and Max setting figures shown throughout this catalog give the design range for each valve, higher or lower values may be attainable but should not be used without first contacting our Engineering department. Setting must ALWAYS be carried out using and appropriate gauge and it must NOT be assumed that screwing an adjuster to its maximum or minimum position will yield the maximum or minimum stated design setting for that valve.

Alternative adjusters

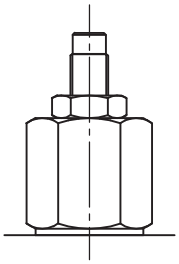

'P' - LEAKPROOF SCREW

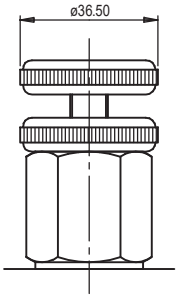

'R' - HANDKNOB

H

Where measurements are critical request certified drawings. We reserve the right to change specifications without notice.

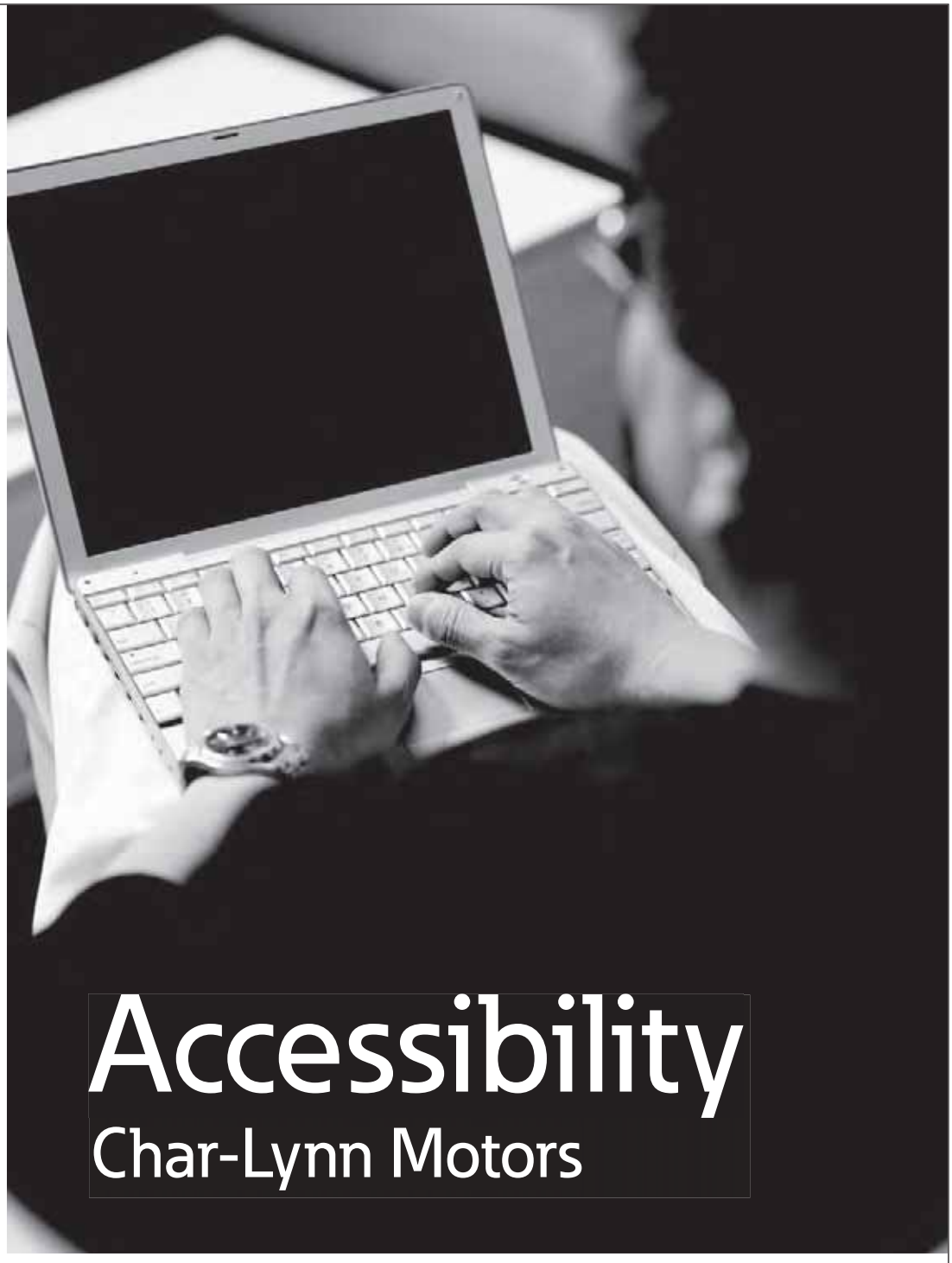

Accessibility
Char-Lynn Motors

EATON
Powering Business Worldwide

Ease of Doing Business

- Expanded Eaton.com
- Products Catalog
- Char-Lynn Service and Repair

Where measurements are critical request certified drawings. We reserve the right to change specifications without notice.

FR5-8 - Flow regulator

Fixed pressure compensated
10 L/min (2.5 USgpm) • 280 bar (4000 psi)

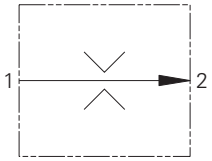

Operation

This valve maintains a constant flow from port 1 to port 2 based on 5.5 bar (80 psid) regardless of pressure changes downstream on port 2. Reverse flow from port 2 to port 1 is at the value of the fixed orifice and is non-pressure compensated.

Features

Hardened and ground and honed working components. Cartridge construction for maximum mounting flexibility.

Sectional view

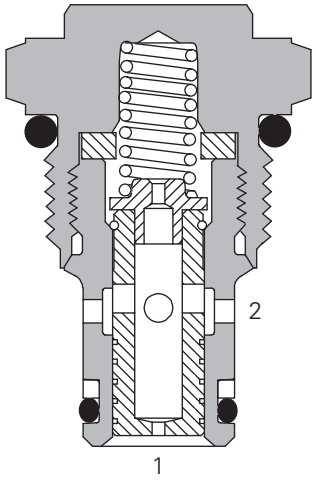

Performance data

Ratings and specifications

Performance data is typical with fluid at 21,8 cSt (105 SUS) and 49°C (120°F)		
Typical application pressure (all ports)		350 bar (5000 psi) steel housing 210 bar (3000 psi) aluminum housing
Cartridge fatigue pressure (infinite life)		280 bar (4000 psi)
Rated flow		10 L/min (2.5 USgpm)
Temperature range		–40° to 120°C (–40° to 248°F)
Flow regulation accuracy	0,4–1,9 L/min (0.1–0.49 USgpm) 0,4–1,9 L/min (0.1–0.49 USgpm) 1,9 – 5,7 L/min (0.5–1.49 USgpm) 5,7–10 L/min (1.5–2.5 USgpm)	20% @ 210 bar (3000 psi) 40% @ 350 bar (5000 psi) 15% 10%
Factory set maximum flow rate accuracy under standard test conditions and within the above ranges		
Cavity		C-8-2
Fluids		All general purpose hydraulic fluids such as MIL-H-5606, SAE 10, SAE 20 etc.
Filtration		Cleanliness code 18/**16/13**
Standard housing material		Aluminum or steel
Weight cartridge only		0,05 kg (0.12 lbs)
Seal kit		02–165875 (Buna-N) 02–165877 (Viton®)

Viton is a registered trademark of E.I. DuPont

Description

This is a fixed orifice, pressure compensated, restrictive flow regulator screw-in cartridge valve.

Typical flow regulation

Cartridge only

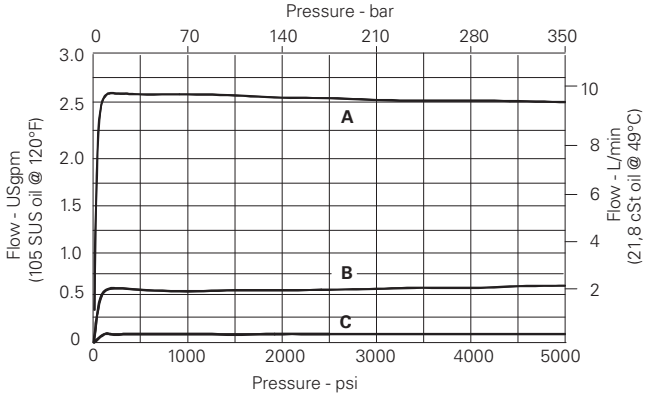

A - 9,5 L/min (2.5 USgpm)
B - 1,9 L/min (0.5 USgpm)
C - 0,38 L/min (0.1 USgpm)

Where measurements are critical request certified drawings. We reserve the right to change specifications without notice.

FR5-8 - Flow regulator

Fixed pressure compensated
10 L/min (2.5 USgpm) • 280 bar (4000 psi)

Model code

FR 5	–	8	(V)	–	F	–	(*)	**	–	*.*	–	00
1		2	3		4		5	6		7		8

1 Function
FR5 - Flow regulator

2 Size
8 - 8 Size

3 Seal material
Blank - Buna-N
V - Viton®

4 Adjustment
F - Fixed orifice

5 Valve housing material
Omit for cartridge only
A - Aluminum
S - Steel

6 Port size

Code	Port size	Housing number	
		Aluminium fatigue rated	Steel fatigue rated
0	Cartridge only		
4T	SAE 4	02–160730	02–160736
6T	SAE 6	02–160731	02–160737
8T	SAE 8	02–160732	02–160738
2G	1/4" BSPP	02–160727	02–160733
3G	3/8" BSPP	02–160728	02–160734

See section J for housing details.

7 Factory set flow rate, nominal
(Specify in USgpm) Range 0,4-9,5 L/min (0.1–2.5 USgpm)

Example:
0.5-1,9 L/min (0.5 USgpm)

8 Special features
00 - None
(Only required if valve has special features, omitted if "00")
SS - 316 Stainless Steel external components

Dimensions
mm (inch)

Torque cartridge in steel oraluminum housing 34-41 Nm (25-30 ft lbs).

Cartridge
Basic code
FR5-8

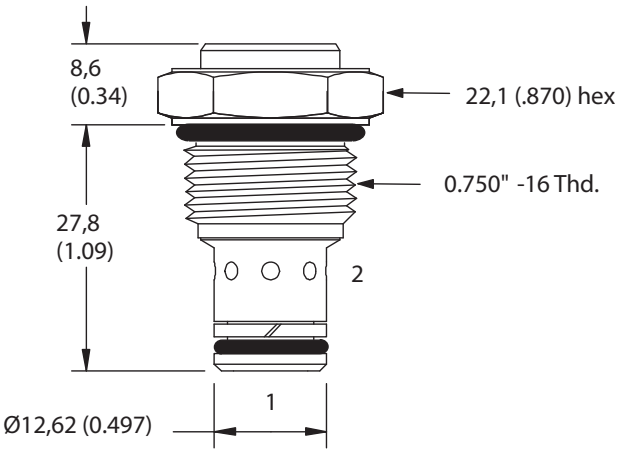

Installation drawing (Steel)

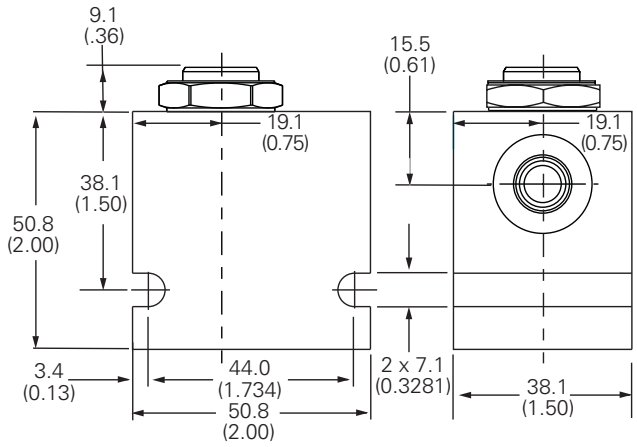

⚠ Warning
Aluminum housings can be used for pressures up to 210 bar (3000 psi). Steel housings **must** be used for operating pressures **above** 210 bar (3000 psi).

H

Where measurements are critical request certified drawings. We reserve the right to change specifications without notice.

FR5-10 - Flow regulator

Fixed, pressure compensated
23 L/min (6 USgpm) • 280 bar (4000 psi)

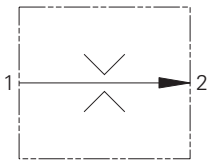

Operation

This valve maintains a constant flow from port 1 to port 2 based on 5.5 bar (80 psid) regardless of pressure changes downstream on port 2. Reverse flow from port 2 to port 1 is at the value of the fixed orifice and is non-pressure compensated.

Features

Hardened and ground and honed working components. Cartridge construction for maximum mounting flexibility.

Sectional view

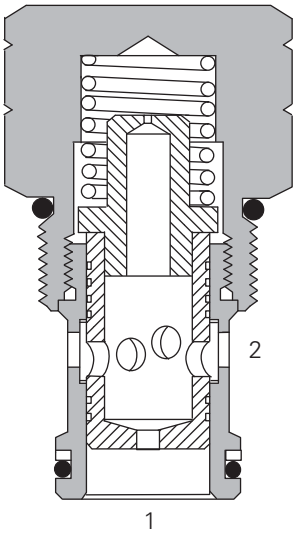

Performance data

Ratings and specifications

Performance data is typical with fluid at 21,8 cSt (105 SUS) and 49°C (120°F)		
Typical application pressure (all ports)		350 bar (5000 psi) steel housing
Cartridge fatigue pressure (infinite life)		280 bar (4000 psi)
Rated flow		23 L/min (6 USgpm)
Temperature range		–40° to 120°C (–40° to 248°F)
Flow regulation accuracy	0,38–1,9 L/min (0.1–0.49 USgpm) 0,38–1,9 L/min (0.1–0.49 USgpm) 1,9 – 5,7 L/min (0.5–1.49 USgpm) 5,7–22,7 L/min (1.5–6 USgpm)	±20% @ 210 bar (3000 psi) ±40% @ 350 bar (5000 psi) ±15% @ 350 bar (5000 psi) ±10% @ 350 bar (5000 psi)
Factory set maximum flow rate accuracy under standard test conditions and within the above ranges		
Cavity		C-10-2
Fluids		All general purpose hydraulic fluids such as MIL-H-5606, SAE 10, SAE 20 etc.
Filtration		Cleanliness code 18/**16/13**
Standard housing material		Aluminum or Steel
Weight cartridge only		0,12 kg (0.26 lbs)
Seal kit		565803 (Buna-N) 566086 (Viton®)

Viton is a registered trademark of E.I. DuPont

Description

This is a fixed orifice, pressure compensated, restrictive flow regulator screw-in cartridge valve.

Typical flow regulation

Cartridge only

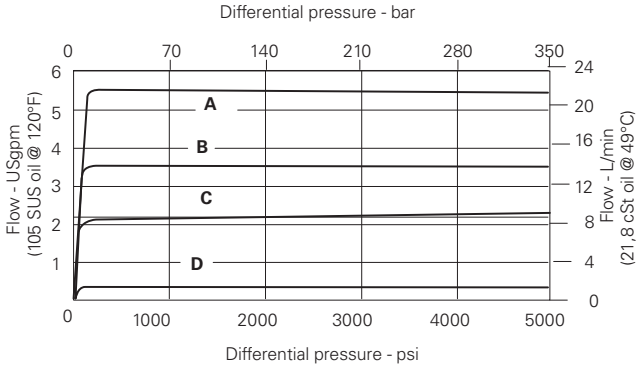

A – 21 L/min (5.5 USgpm)
B – 13,3 L/min (3.5 USgpm)
C – 7,8 L/min (2.0 USgpm)
D – 0,95 L/min (0.25 USgpm)

Where measurements are critical request certified drawings. We reserve the right to change specifications without notice.

FR5-10 - Flow regulator

Fixed, pressure compensated
23 L/min (6 USgpm) • 280 bar (4000 psi)

Model code

FR 5	–	10	(V)	–	F	–	(*)	**	–	*.*	–	00
1		2	3		4		5	6		7		8

1 Function
FR5 - Flow regulator

2 Size
10 - 10 Size

3 Seal material
Blank - Buna-N
V - Viton®

4 Adjustment
F - Fixed orifice

5 Valve housing material
Omit for cartridge only
A - Aluminum
S - Steel

6 Port size

Code	Port size	Housing number		
		Aluminium light duty	Aluminium fatigue rated	Steel fatigue rated
0	Cartridge only			
3B	3/8" BSPP	02–175462	–	–
2G	1/4" BSPP	–	876702	02-175102
3G	3/8" BSPP	–	876703	02-175103
6H	SAE 6	–	876700	–
8H	SAE 8	–	876701	–
6T	SAE 6	566151	–	02-175100
8T	SAE 8	–	–	02-175101

See section J for housing details.

7 Factory set flow rate
(Specify in USgpm)
Range 0,4-9,5 L/min
(0.1-2.5 USgpm)

8 Special features
00 - None
(Only required if valve has special features, omitted if "00")

Dimensions
mm (inch)

Torque cartridge in housing
A - 47-54 Nm (35-40 ft lbs)
S - 68-75 Nm (50-55 ft lbs)

Cartridge
Basic code
FR5-10

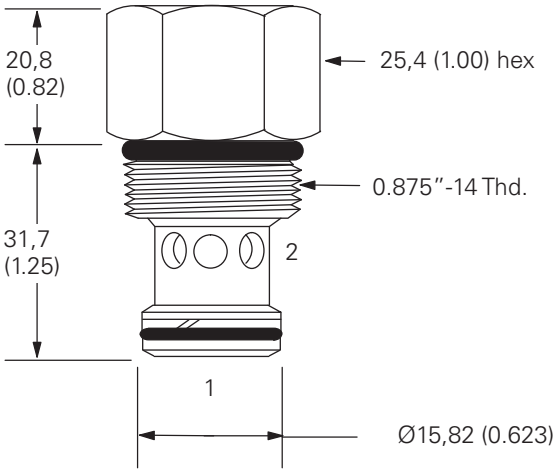

Installation drawing (Steel)

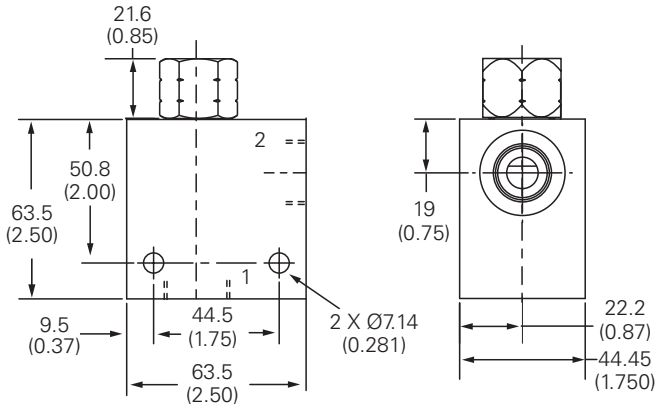

⚠ Warning
Aluminum housings can be used for pressures up to 210 bar (3000 psi). Steel housings **must** be used for operating pressures **above** 210 bar (3000 psi).

H

Where measurements are critical request certified drawings. We reserve the right to change specifications without notice.

FR1-16 - Flow regulator

Fixed, pressure compensated
114 L/min (30 USgpm) • 210 bar (3000 psi)

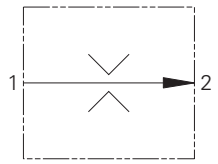

Operation

This valve maintains a constant flow from port 1 to port 2 based on 5.5 bar (80 psid) regardless of pressure changes downstream on port 2. Reverse flow from port 2 to port 1 is at the value of the fixed orifice and is non-pressure compensated.

Features

Hardened and ground and honed working components. Cartridge construction for maximum mounting flexibility.

Sectional view

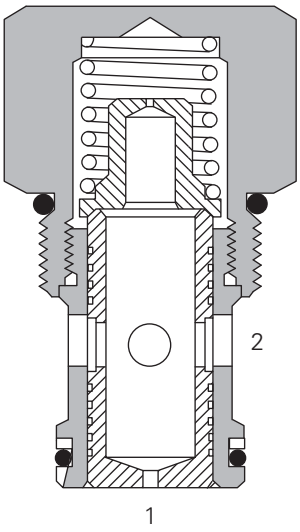

Performance data

Ratings and specifications

Performance data is typical with fluid at 21,8 cSt (105 SUS) and 49°C (120°F)		
Typical application pressure (all ports)		210 bar (3000 psi)
Cartridge fatigue pressure (infinite life)		210 bar (3000 psi)
Rated flow		114 L/min (30 USgpm)
Temperature range		–40° to 120°C (–40° to 248°F)
Flow regulation accuracy	1,9–10,9 L/min (0.5–2.9 USgpm) 11,4–114 L/min (3–30 USgpm)	±15% ±10%
Factory set maximum flow rate accuracy under standard test conditions and within the above ranges		
Cavity		C-16-2
Fluids		All general purpose hydraulic fluids such as MIL-H-5606, SAE 10, SAE 20 etc.
Filtration		Cleanliness code 18/**16/13**
Standard housing material		Aluminum
Weight cartridge only		0,33 kg (0.72 lbs)
Seal kit		565810 (Buna-N) 880609 (Viton®)

Viton is a registered trademark of E.I. DuPont

Description

This is a fixed orifice, pressure compensated, restrictive flow regulator screw-in cartridge valve.

Typical flow regulation

Cartridge only

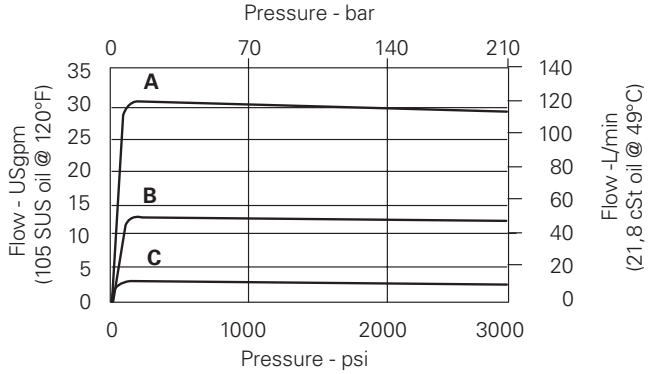

A - 114 L/min (30.0 USgpm)
B - 60 L/min (15.0 USgpm)
C - 9,5 L/min (2.5 USgpm)

Where measurements are critical request certified drawings. We reserve the right to change specifications without notice.

FR1-16 - Flow regulator

Fixed, pressure compensated
114 L/min (30 USgpm) • 210 bar (3000 psi)

Model code

FR 1 – 16 (V) – F *** – *.* – 00

1 2 3 4 5 6 7

1 Function
FR1 - Flow regulator

2 Size
16 - 16 Size

3 Seal material
Blank - Buna-N
V - Viton®

4 Adjustment
F - Fixed orifice

5 Port size

Code	Port size	Housing number	
		Aluminium light duty	Aluminium fatigue rated
0	Cartridge only		
6B	3/4" BSPP	02–175463	–
12T	SAE 12	566149	–
4G	1/2" BSPP	–	876716
6G	3/4" BSPP	–	876718
10H	SAE 10	–	876717
12H	SAE 12	–	566113

See section J for housing details.

6 Factory set flow rate, nominal
(Specify in USgpm)
Range 1,9-114 L/min
(0.5-30 USgpm)

7 Special features
00 - None
(Only required if valve has special features, omitted if "00")

Dimensions
mm (inch)

Torque cartridge in aluminum housing to 108-122 Nm (80-90 ft lbs)

Cartridge
Basic code
FR1-16

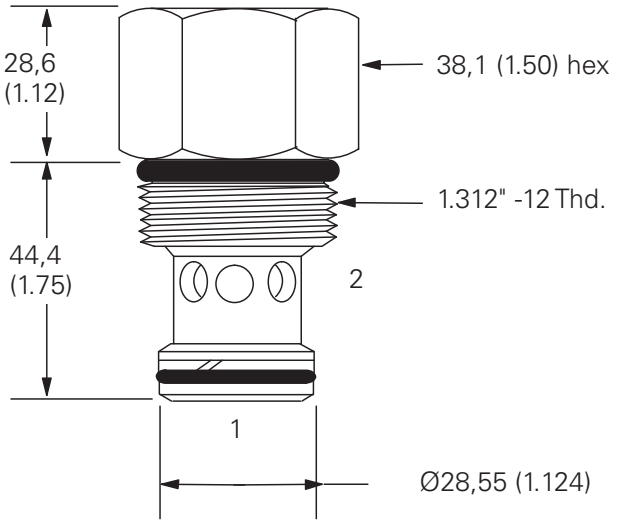

Installation drawing

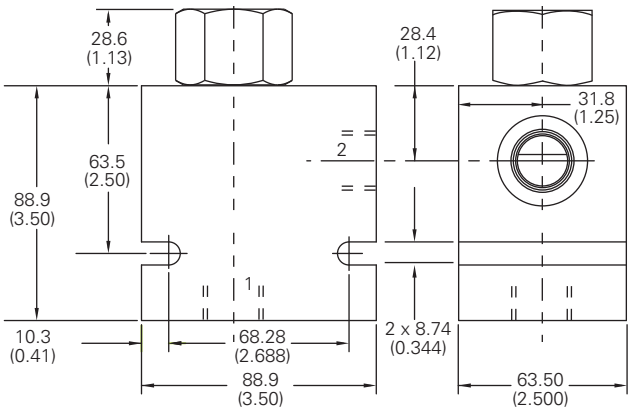

H

Where measurements are critical request certified drawings. We reserve the right to change specifications without notice.

FR1-20 - Flow regulator

Fixed, pressure compensated
227 L/min (60 USgpm) • 210 bar (3000 psi)

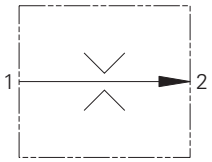

Operation

This valve maintains a constant flow from port 1 to port 2 based on 5.5 bar (80 psid) regardless of pressure changes downstream on port 2. Reverse flow from port 2 to port 1 is at the value of the fixed orifice and is non-pressure compensated.

Features

Hardened and ground and honed working components. Cartridge construction for maximum mounting flexibility.

Sectional view

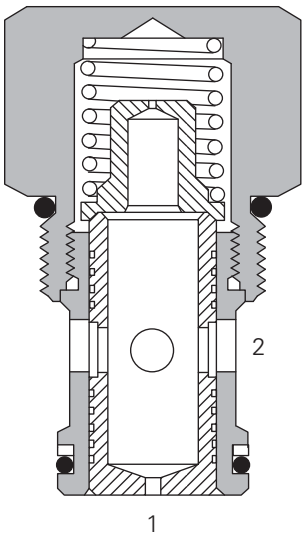

Performance data

Ratings and specifications

Performance data is typical with fluid at 21,8 cSt (105 SUS) and 49°C (120°F)		
Typical application pressure (all ports)		210 bar (3000 psi)
Cartridge fatigue pressure (infinite life)		210 bar (3000 psi)
Rated flow		227 L/min (60 USgpm)
Temperature range		–40° to 120°C (–40° to 248°F)
Flow regulation accuracy	3,8–18,5 L/min (1–4.9 USgpm) 19–227 L/min (5–60 USgpm)	±15% ±10%
Factory set maximum flow rate accuracy under standard test conditions and within the above ranges		
Cavity		C-20-2
Fluids		All general purpose hydraulic fluids such as MIL-H-5606, SAE 10, SAE 20 etc.
Filtration		Cleanliness code 18/**16/13**
Standard housing material		Aluminum
Weight cartridge only		0,82 kg (1.8 lbs)
Seal kit		889615 (Buna-N), 889619 (Viton®)

Viton is a registered trademark of E.I. DuPont

Description

This is a fixed orifice, pressure compensated, restrictive flow regulator screw-in cartridge valve.

Typical flow regulation

Cartridge only

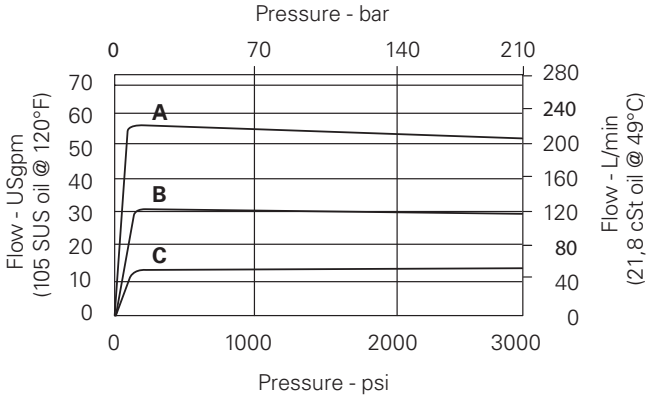

A - 227 L/min (60.0 USgpm)
B - 114 L/min (30.0 USgpm)
C - 38 L/min (10.0 USgpm)

Where measurements are critical request certified drawings. We reserve the right to change specifications without notice.

FR1-20 - Flow regulator

Fixed, pressure compensated
227 L/min (60 USgpm) • 210 bar (3000 psi)

Model code

FR 1	–	20	(V)	–	F	–	***	–	*.*	–	00
1		2	3		4		5		6		7

1 Function
FR1 - Flow regulator

2 Size
20 - 20 Size

3 Seal material
Blank - Buna-N
V - Viton®

4 Adjustment
F - Fixed orifice

5 Port size

Code	Port size	Housing number	
		Aluminium light duty	Aluminium fatigue rated
0	Cartridge only		
6B	3/4" BSPP	02–175464	–
12T	SAE 12	566409	–
4G	1/2" BSPP	–	876732
6G	3/4" BSPP	–	876734
10H	SAE 10	–	876733
12H	SAE 12	–	876735

See section J for housing details.

6 Factory set flow rate, nominal
(Specify in USgpm)
Range 3.8-277 L/min
(0.5-60 USgpm)

7 Special features
00 – None
(Only required if valve has special features, omitted if "00")

Dimensions
mm (inch)

Torque cartridge in aluminum housing to 128-155 Nm (95-115 ft lbs)

Cartridge
Basic code
FR1-20

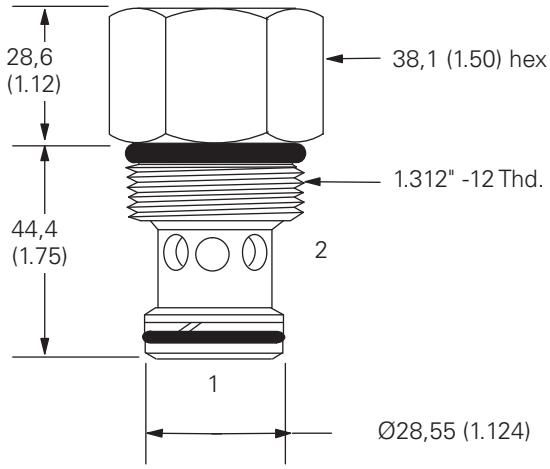

Installation drawing

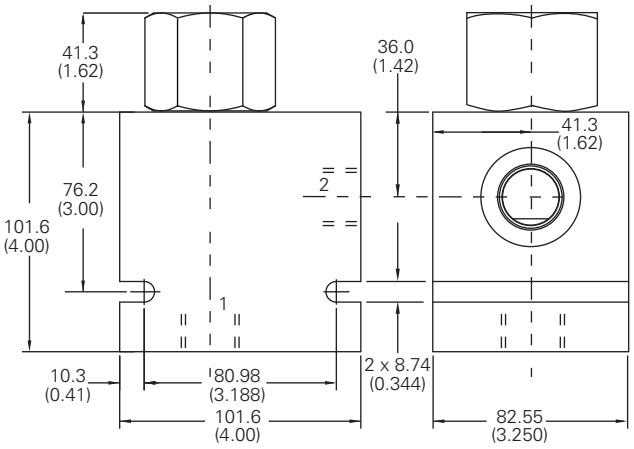

H

Where measurements are critical request certified drawings. We reserve the right to change specifications without notice.

FR2-10 - Flow regulator

Limited range, adjustable pressure compensated
38 L/min (10 Usgpm) • 210 bar (3000 psi)

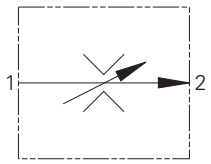

Operation

This valve maintains a constant flow from port 1 to port 2 based on the setting adjustment, regardless of pressure changes downstream on port 2.

Reverse flow from port 2 to port 1 is at the value of the fixed orifice and is non-pressure compensated.

Features

Hardened and ground and honed working components. Cartridge construction for maximum mounting flexibility.

Sectional view

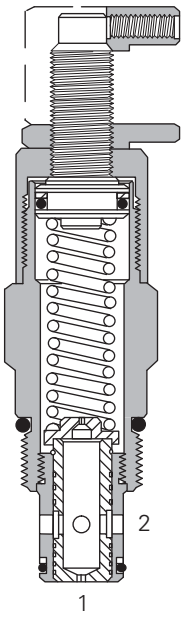

Performance data

Ratings and specifications

Performance data is typical with fluid at 21,8 cSt (105 SUS) and 49°C (120°F)	
Typical application pressure (all ports)	210 bar (3000 psi)
Cartridge fatigue pressure (infinite life)	210 bar (3000 psi)
Rated flow	38 L/min (10 USgpm)
Temperature range	–40° to 120°C (–40° to 248°F)
Flow regulation accuracy Factory set maximum flow rate accuracy under standard test conditions and within the above ranges	0,4–1,9 L/min (0.1–0.49 USgpm) ±20% 1,9–7,5 L/min (0.5–1.99 USgpm) ±15% 7,6–37,8 L/min (2.0–10.0 USgpm) ±10%
Cavity	C-10-2
Fluids	All general purpose hydraulic fluids such as: MIL-H-5606, SAE 10, SAE 20 etc.
Filtration	Cleanliness code 18/**16/13**
Standard housing material	Aluminum
Weight cartridge only	0,22 kg (.48 lbs)
Seal kit	565803 (Buna-N), 566086 (Viton®)

Viton is a registered trademark of E.I. DuPont

Description

This valves is a limited range adjustable, pressure compensated, screw-in flow regulator cartridge valve.

The flow adjustment is from the factory set maximum flow rate down to 50% of that factory set flow rate.

Typical flow regulation

Cartridge only

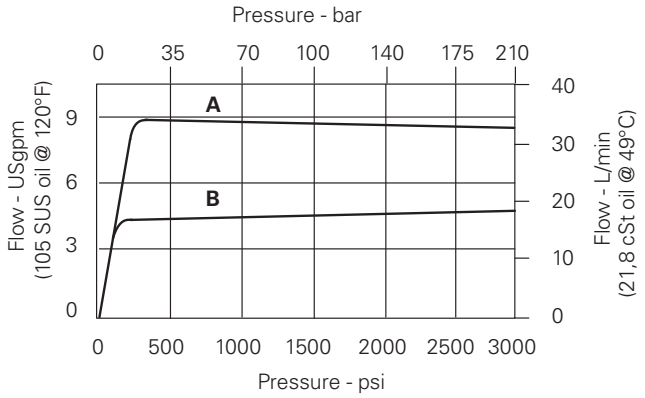

A - 38,0 L/min (10.0 USgpm)
B - 19,0 L/min (5.0 USgpm)

Where measurements are critical request certified drawings. We reserve the right to change specifications without notice.

FR2-10 - Flow regulator

Limited range, adjustable pressure compensated
38 L/min (10 Usgpm) • 210 bar (3000 psi)

Model code

FR 2	–	10	(V)	–	*	–	***	–	*.*	–	00
1		2	3		4		5		6		7

1 Function
FR2 - Flow regulator

2 Size
10 - 10 Size

3 Seal material
Blank - Buna-N
V - Viton®

4 Adjustment
C - Cap
F - Factory-set
I - Internal
K - Knob
S - Screw

5 Port size

Code	Port size	Housing number	
		Aluminium light duty	Aluminium fatigue rated
0	Cartridge only		
3B	3/8" BSPP	02–175462	–
6T	SAE 6	566151	–
2G	1/4" BSPP	–	876702
3G	3/8" BSPP	–	876703
6H	SAE 6	–	876700
8H	SAE 8	–	876701

See section J for housing details.

6 Factory set flow rate,
(Specify in USgpm)
Range 0,38–22,7 L/min
(0.1–10.0 USgpm)

7 Special features
00 – None
(Only required if valve has special features, omitted if "00")

SS - 316 Stainless steel external components

Dimensions
mm (inch)

Torque cartridge in aluminum housing to 47-54 Nm (35-40 ft lbs)

Cartridge
Basic code
FR2-10

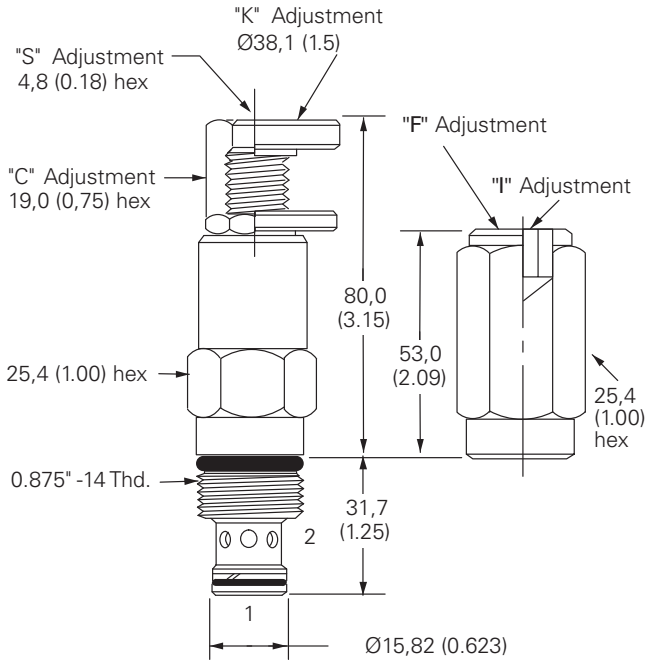

Installation drawing

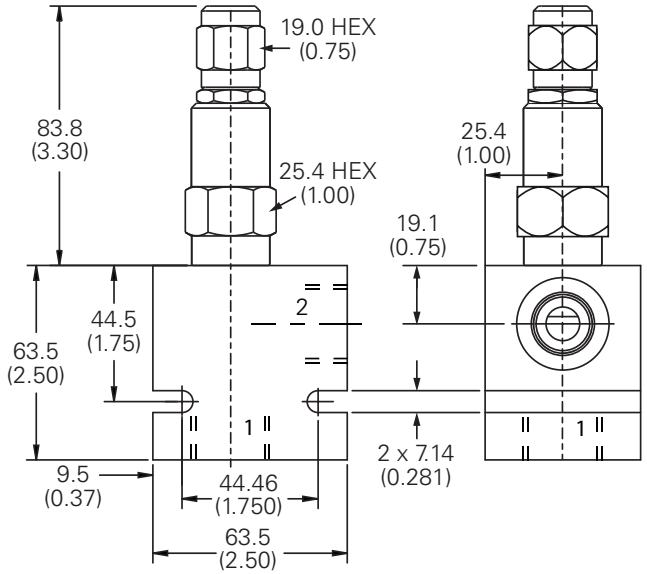

Where measurements are critical request certified drawings. We reserve the right to change specifications without notice.

H

FR2-16 - Flow regulator

Limited range, adjustable pressure compensated
114 L/min (30 USgpm) • 210 bar (3000 psi)

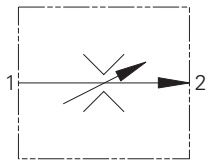

Operation

This valve maintains a constant flow from port 1 to port 2 based on the setting adjustment, regardless of pressure changes down stream on port 2. Reverse flow from port 2 to port 1 is at the value of the fixed orifice and is non-pressure compensated.

Features

Hardened and ground and honed working components. Cartridge construction for maximum mounting flexibility.

Sectional view

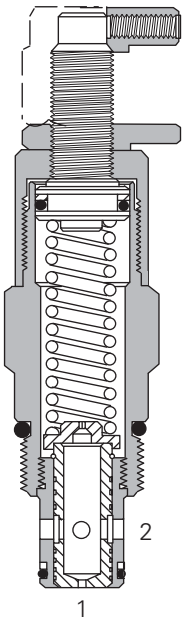

Performance data

Ratings and specifications

Performance data is typical with fluid at 21,8 cSt (105 SUS) and 49°C (120°F)	
Typical application pressure (all ports)	210 bar (3000 psi)
Cartridge fatigue pressure (infinite life)	210 bar (3000 psi)
Rated flow	114 L/min (30 USgpm)
Temperature range	–40° to 120°C (–40° to 248°F)
Flow regulation accuracy	1,9–10,9 L/min (0.5–2.9 USgpm) ±15% 11,4–114 L/min (3–30 USgpm) ±10%
Factory set maximum flow rate accuracy under standard test conditions and within the above ranges	
Cavity	C-16-2
Fluids	All general purpose hydraulic fluids such as: MIL-H-5606, SAE 10, SAE 20 etc.
Filtration	Cleanliness code 18/**16/13**
Standard housing material	Aluminum
Weight cartridge only	0,71 kg (1.57 lbs)
Seal kit	565810 (Buna-N) 889609 (Viton®)

Viton is a registered trademark of E.I. DuPont

Description

This valves is a limited range adjustable, pressure compensated, screw-in flow regulator cartridge valve.

The flow adjustment is from the factory set maximum flow rate down to 50% of that factory set flow rate.

Typical flow regulation

Cartridge only

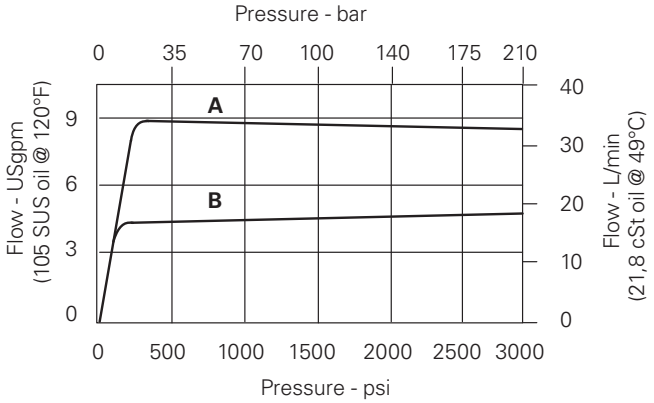

A - 114 L/min (30.0 USgpm)
B - 38 L/min (10.0 USgpm)
C - 9,5 L/min (2.5 USgpm)

Where measurements are critical request certified drawings. We reserve the right to change specifications without notice.

FR2-16 - Flow regulator

Limited range, adjustable pressure compensated
114 L/min (30 USgpm) • 210 bar (3000 psi)

Model code

FR 2	–	16	(V)	–	*	–	***	–	*.*	–	00
1		2	3		4		5		6		7

1 Function
FR2 - Flow regulator

2 Size
16 - 16 Size

3 Seal material
Blank - Buna-N
V - Viton®

4 Adjustment
C - Cap
K - Knob
S - Screw
Y - Knob (Stainless)

5 Port size

Code	Port size	Housing number	
		Aluminium light duty	Aluminium fatigue rated
0	Cartridge only		
6B	3/4" BSPP	02–175463	–
12T	SAE 12	566149	–
4G	1/2" BSPP	–	876716
6G	3/4" BSPP	–	876718
10H	SAE 10	–	876717
12H	SAE 12	–	876713

See section J for housing details.

6 Factory set flow rate,
(Specify in USgpm)
Range 1,9–114 L/min
(0.5–30 USgpm)

7 Special features
00 – None
(Only required if valve has special features, omitted if "00")
SS - 316 Stainless steel external components

Dimensions
mm (inch)

Torque cartridge in aluminum housing to 108-122 Nm (80-90 ft lbs)

Cartridge
Basic code
FR2-16

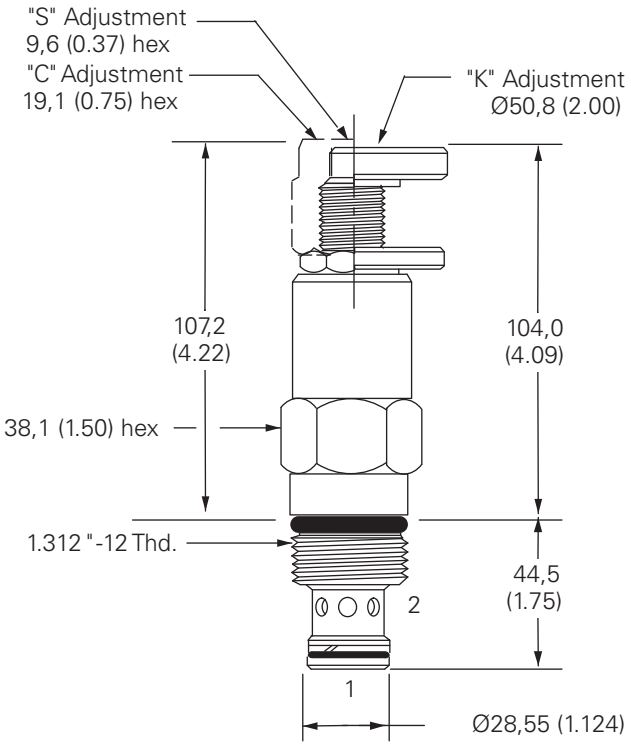

Installation drawing

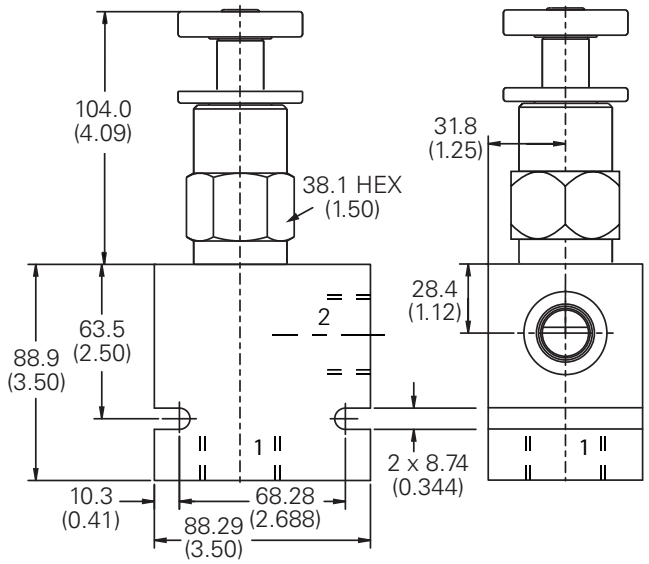

Where measurements are critical request certified drawings. We reserve the right to change specifications without notice.

2CFRC60 - Flow regulator

Restrictive, pressure compensated with reverse check
4-60 L/min (1 to 16 USgpm) • 350 bar (5000 psi)

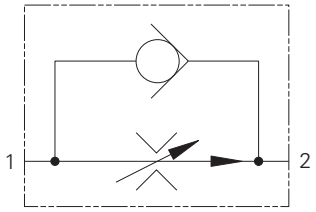

Operation

Flow into the inlet of the valve passes through the adjustable orifice and out of the regulated port. The pressure drop across the orifice is sensed on the regulating sleeve and produces a force which, at the required flow rate, overcomes the spring force. The resultant movement of the sleeve regulates the flow by closing the radial valve ports.

The inbuilt check allows free return of flow (2 to 1).

Features

Cartridge construction gives versatility of application. A valve may be fitted into a line body, a custom designed Hydraulic Integrated Circuit or directly into a cylinder or other actuator. Leakproof adjust screw gives easy, accurate adjustment to required flow setting. Hardened and ground working parts give accurate flow control and long working life.

Sectional view

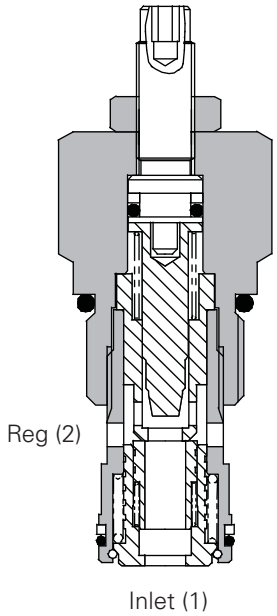

Performance data

Ratings and specifications

Figures based on oil temperature of 40° C and of 32 cSt (150 SUS)	
Rated Flow	4 to 60 liters/min (1 to 16 USgpm)
Maximum pressure	350 bar (5000 psi)
Cartridge material	All working parts hardened & ground steel. Zinc plated body
Standard housing material	Standard aluminum (up to 210 bar*) Add suffix "377" for steel option
Mounting position	Unrestricted
Cavity Number	A7447 (See Section M)
Torque cartridge into cavity	75 Nm (55 ft lbs)
Weight	2CFRC60: 0,29 kg (0.64 lbs) 2CFRC65: 0,75 kg (1.65 lbs)
Seal kit number	SK578 (Nitrile) SK578V (Viton®)
Recommended Filtration Level	BS5540/4 Class 18/13 (25 micron nominal)
Operating temperature	–30° to +90°C (–22° to +194°F)
Nominal range	5 to 500 cSt

Viton is a registered trademark of E.I. DuPont

Description

This is a two-port, restrictive flow regulator with a built in free flow check valve. Typical uses include the control of actuator speed by regulating the flow into or out of the actuator (meter-in or meter-out).

The flow (and actuator speed) will be largely independent of the load and the pressure conditions. If used to restrict flow from a fixed supply, for example a standard gear or piston pump, the valve will pass the required flow and any surplus flow will normally pass over the system relief valve.

Pressure drop curves

Cartridge only

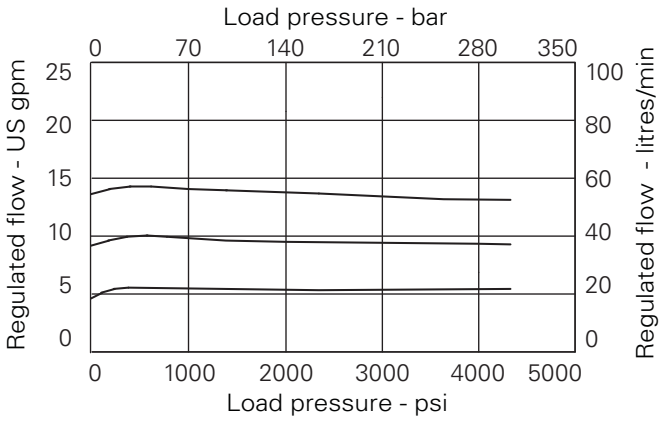

Where measurements are critical request certified drawings. We reserve the right to change specifications without notice.

2CFRC60 - Flow regulator

Restrictive, pressure compensated with reverse check
4-60 L/min (1 to 16 USgpm) • 350 bar (5000 psi)

Model code

2CFRC – P 4W – 4 S**

1 2 3 4 5

1 Basic code
2CFRC60 - Cartridge only
2CFRC65 - Cartridge & body

2 Adjustment means
P - Leakproof screw adjustment
R - Handknob adjustment (See page H-6 for dimensions)

3 Port size - bodied valves only
4W - 1/2" BSP
8T - 1/2" SAE

4 Adjustable flow range
4 - 4-40 L/min. Standard setting 30 L/min
6 - 6-60 L/min. Standard setting 40 L/min

5 Seals
S - Nitrile (for use with most industrial hydraulic oils
SV - Viton (for high temperature & most special fluid applications)

Dimensions
mm (inch)

Note: For applications above 210 bar (3000 psi)please consult our technical department or use the steel body option

Cartridge only
Basic code
2CFRC60

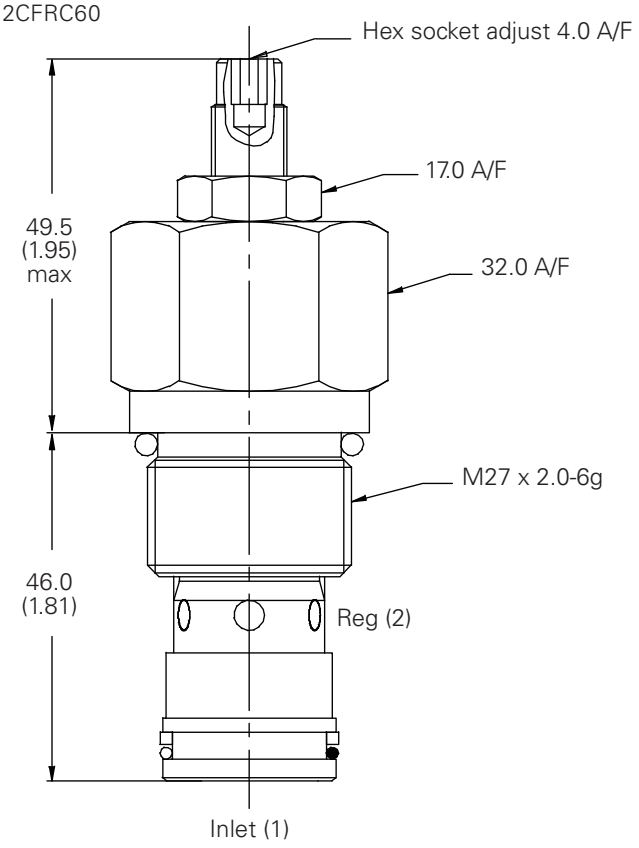

Complete valve
Basic code
2CFRC65

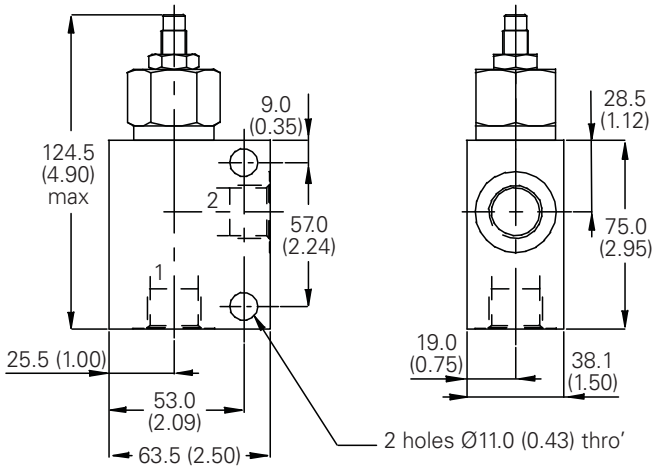

Where measurements are critical request certified drawings. We reserve the right to change specifications without notice.

H

FAR1-10 - Flow regulator

Fully adjustable, pressure compensated with free reverse flow
1-38 L/min (0.25-10 USgpm) • 310 bar (4500 psi)

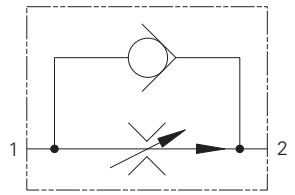

Operation

Flow into the inlet of the valve passes through the adjustable orifice and out of the regulated port. The pressure drop across the orifice is sensed on the regulating sleeve and produces a force which, at the required flow rate, overcomes the spring force. The resultant movement of the sleeve regulates the flow by closing the radial valve ports.

The inbuilt check allows free return of flow (2 to 1).

Features

Cartridge construction gives versatility of application. A valve may be fitted into a line body, a custom designed Hydraulic Integrated Circuit or directly into a cylinder or other actuator. Leakproof adjust screw gives easy, accurate adjustment to required flow setting. Hardened and ground working parts give accurate flow control and long working life.

Sectional view

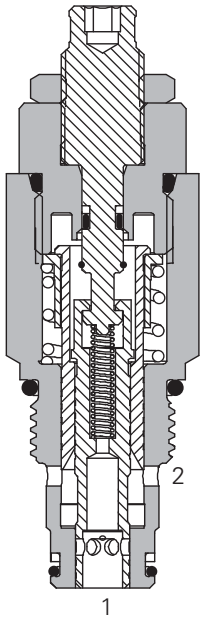

Performance data

Ratings and specifications

Performance data is typical with fluid at 21,8 cSt (105 SUS) and 49°C (120°F)	
Typical application pressure (all ports)	5–350 bar (75–5000 psi) steel housing
Min. pressure differential across valve	14 bar (200 psi)
Cartridge fatigue pressure (infinite life)	310 bar (4500 psi)
Rated flow	1–38 L/min (0.25–10 USgpm)
Temperature range	40° to 120°C (–40° to 248°F)
Flow regulation accuracy Factory set maximum flow rate accuracy under standard test conditions and within the above ranges	4–38 L/min (1–10 USgpm) ±10% 1–4 L/min (0.25–1 USgpm) ±20%
Reverse check crack pressure	1.7 bar (25 psi)
Leakage at shutoff position	0.4 L/min (24.4 in3/min)
Cavity	C-10-2
Fluids	All general purpose hydraulic fluids such as: MIL-H-5606, SAE 10, SAE 20 etc.
Filtration	Cleanliness code 18/**16/13**
Standard housing material	Aluminum or Steel
Weight cartridge only	"S" 0,02 kg (0.44 lbs) "K" 0,23 kg (0.51 lbs) "H" 0,26 kg (0.59 lbs)
Seal kit	565803 (Buna-N), 566086 (Viton®)

Viton is a registered trademark of E.I. DuPont

Description

This is a two-port, restrictive flow regulator with a built in free flow check valve. Typical uses include the control of actuator speed by regulating the flow into or out of the actuator (meter-in or meter-out).

The flow (and actuator speed) will be largely independent of the load and the pressure conditions. If used to restrict flow from a fixed supply, for example a standard gear or piston pump, the valve will pass the required flow and any surplus flow will normally pass over the system relief valve.

Typical flow regulation

Cartridge only

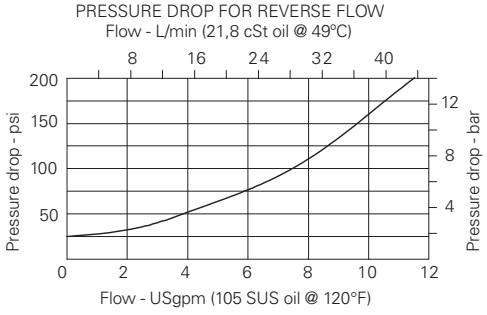

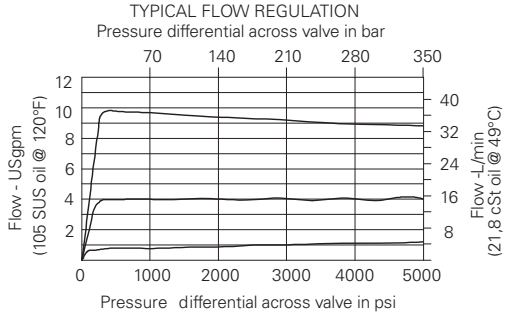

Where measurements are critical request certified drawings. We reserve the right to change specifications without notice.

FAR1-10 - Flow regulator

Fully adjustable, pressure compensated with free reverse flow
1-38 L/min (0.25-10 USgpm) • 310 bar (4500 psi)

Model code

FAR1 – 10 (V) – * – * – ** – *.* – 00

1 2 3 4 5 6 7 8

1 Function

FAR1 - Flow adjustable, pressure compensated flow regulator with reverse flow check

2 Size

10 - 10 Size

3 Seal material

Blank - Buna-N
V - Viton®

4 Adjustment means

H - Calibrated handknob with locknut
K - Handknob with locknut
S - Screw with locknut

5 Valve housing material

Omit for cartridge only

A - Aluminum
S - Steel

6 Port size

Code	Port size	Housing number		
		Aluminium light duty	Aluminium fatigue rated	Steel fatigue rated
0	Cartridge only			
3B	3/8" BSPP	02–175462	–	–
2G	1/4" BSPP	–	876702	02-175102
3G	3/8" BSPP	–	876703	02-175103
6H	SAE 6	–	876700	–
8H	SAE 8	–	876701	–
6T	SAE 6	566151	–	02-175100
8T	SAE 8	–	–	02-175101

See section J for housing details.

7 Factory set flow rate

Blank - Normal factory setting at 5 USgpm User requested setting within .25–10 US gpm (1–38 L/min.)

8 Special features

00 – None
(Only required if valve has special features, omitted if "00")

⚠ Warning

Aluminum housings can be used for pressures up to 210 bar (3000 psi). Steel housings **must** be used for operating pressures **above** 210 bar (3000 psi).

Dimensions

mm (inch)

Torque cartridge in housing

A - 47-54 Nm (35-40 ft lbs)
S - 68-75 Nm (50-55 ft lbs)
"K" adjustment kit – 565585

Note: To reset scale and knob to an optimum viewing position:

1. Loosen the set screw
2. Rotate zero point on scale to a desired orientation.
3. Align mark on knob with zero on scale.
4. Tighten the set screw firmly.

Note: To change the setting:

1. Loosen the set screw
2. Loosen jamnut while holding the knob steady, or move the knob along the axis slightly.
3. Turn adjusting screw (jam nut and knob will turn at the same time).
4. At the new adjusting screw position, tighten jamnut firmly while holding the knob steady, or move the knob along the axis slightly.
5. Tighten the set screw firmly.

Cartridge

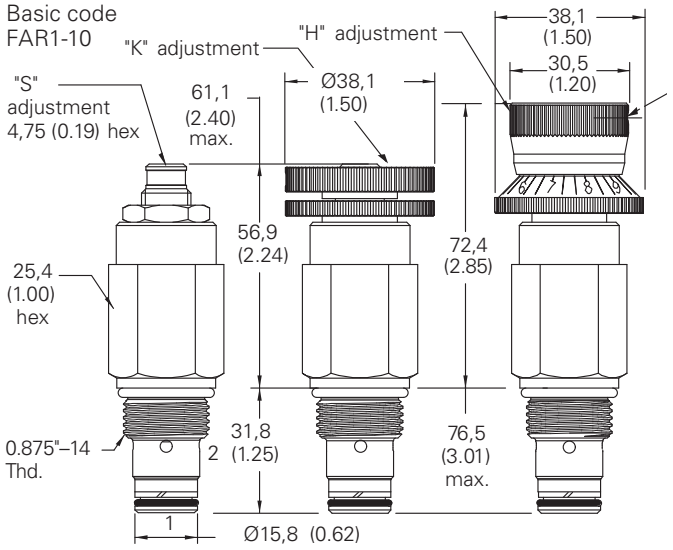

Installation drawing (Steel)

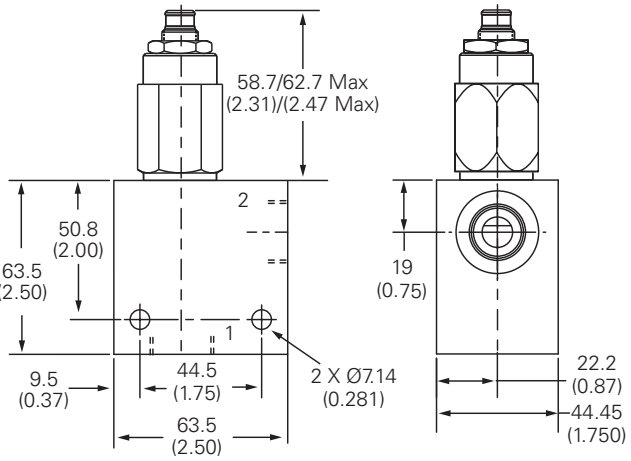

Where measurements are critical request certified drawings. We reserve the right to change specifications without notice.

FAR1-12 - Flow regulator

Fully adjustable, pressure compensated with free reverse flow
1.5-94.5 L/min (0.4-25 USgpm) • 310 bar (4500 psi)

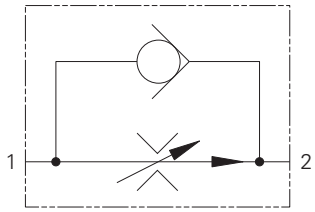

Operation

Flow into the inlet of the valve passes through the adjustable orifice and out of the regulated port. The pressure drop across the orifice is sensed on the regulating sleeve and produces a force which, at the required flow rate, overcomes the spring force. The resultant movement of the sleeve regulates the flow by closing the radial valve ports.

The inbuilt check allows free return of flow (2 to 1).

Features

Cartridge construction gives versatility of application.
A valve may be fitted into a line body, a custom designed Hydraulic Integrated Circuit or directly into a cylinder or other actuator. Leakproof adjust screw gives easy, accurate adjustment to required flow setting. Hardened and ground working parts give accurate flow control and long working life.

Sectional view

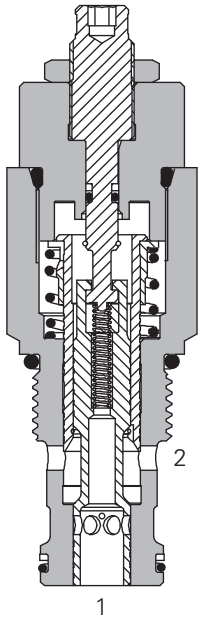

Performance data

Ratings and specifications

Performance data is typical with fluid at 21,8 cSt (105 SUS) and 49°C (120°F)		
Typical application pressure (all ports)		350 bar (5000 psi)
Min. pressure differential across valve		15,9 bar (230 psi)
Max. pressure differential across valve		329 bar (4770 psi)
Cartridge fatigue pressure (infinite life)		310 bar (4500 psi)
Rated flow		1,5–94,5 L/min (.4–25 USgpm)
Temperature range		40° to 120°C (–40° to 248°F)
Flow regulation accuracy	1,5–3,8 L/min (.4–1.0 USgpm) above 3,8–68,1 L/min (above 1–18 USgpm) above 68,1–94,6 L/min (above 18–25 USgpm) 3,8–56,8 L/min (1–15 USgpm) above 56,8–89,1 L/min (above 15–23 USgpm)	±20% @5000 psi ±10% @3000 psi ±15% @3000 psi ±10% @5000 psi ±15% @5000 psi
Factory set maximum flow rate accuracy under standard test conditions and within the above ranges		
Reverse check crack pressure		1.7 bar (25 psi)
Leakage at shutoff position		0,5 L/min (30 in3/min)
Cavity		C–12–2 & C–12–2U
Fluids		All general purpose hydraulic fluids such as: MIL-H-5606, SAE 10, SAE 20 etc.
Filtration		Cleanliness code 18/**16/13**
Standard housing material		Aluminum or Steel
Weight cartridge only		"S" 0,43 kg (0.95 lbs)
Seal kit		02–181304 (Buna-N) 02–181305 (Viton®)

Viton is a registered trademark of E.I. DuPont

Description

This is a two-port, restrictive flow regulator with a built in free flow check valve. Typical uses include the control of actuator speed by regulating the flow into or out of the actuator (meter-in or meter-out).

The flow (and actuator speed) will be largely independent of the load and the pressure conditions. If used to restrict flow from a fixed supply, for example a standard gear or piston pump, the valve will pass the required flow and any surplus flow will normally pass over the system relief valve.

Typical flow regulation

Cartridge only

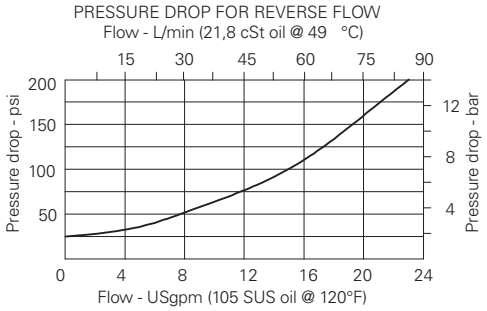

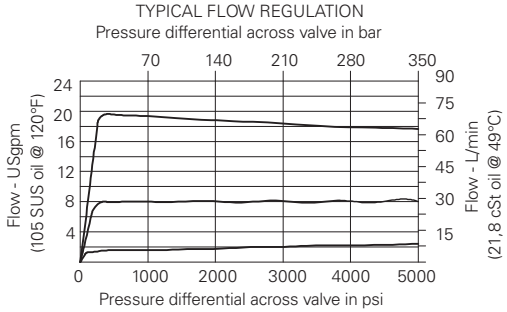

Where measurements are critical request certified drawings. We reserve the right to change specifications without notice.

FAR1-12 - Flow regulator

Fully adjustable, pressure compensated with free reverse flow
1.5-94.5 L/min (0.4-25 USgpm) • 310 bar (4500 psi)

Model code

FAR1 – 12 (V) – * – * – ** – *.* – 00

1 2 3 4 5 6 7 8

1 Function

FAR1 - Flow adjustable, pressure compensated flow regulator with reverse flow check

2 Size

12 - 12 Size

3 Seal material

Blank - Buna-N
V - Viton®

4 Adjustment

H - Calibrated handknob with locknut
K - Handknob with locknut
S - Screw with locknut

5 Valve housing material

Omit for cartridge only
A - Aluminum **S** - Steel

6 Port size

Code	Port size	Housing number C-12-2U Aluminium light duty	C-12-2 Aluminium fatigue rated	C-12-2U Steel fatigue rated	C-12-2 Steel fatigue rated
					See section J for housing
0	Cartridge only				
10T(U)	SAE 10	02–160641	02-160640	02-169817	02-169744
12T(U)	SAE 12	02–160645	02-160644	02-169790	02-169782
4G(U)	1/2" BSPP	02–161116	02-161118	02-172512	02-172062
6G(U)	3/4" BSPP	02–161115	02-161117	02-162922	02-169665

See section J for housing details.

7 Factory set flow rate

Blank - Normal factory setting at 10 USgpm User requested setting Within .04–25 US gpm (1,5-–94,6 L/min.) up to 210 bar (3000 psi) Within 0.4-23 USgpm (1,5-87,1 L/min.) up to 350bar (5000 psi)

8 Special features

00 – None
(Only required if valve has special features, omitted if "00")

Dimensions

mm (inch)

Torque cartridge in housing
A - 81-93 Nm (60-70 ft lbs)
S - 102-115 Nm (75-85 ft lbs)

"K" adjustment kit – 565585

Note: To reset scale and knob to an optimum viewing position:

1. Loosen the set screw
2. Rotate zero point on scale to a desired orientation.
3. Align mark on knob with zero on scale.
4 Tighten the set screw firmly.

Note: To change the setting:

1. Loosen the set screw
2. Loosen jamnut while holding the knob steady, or move the knob along the axis slightly.
3. Turn adjusting screw (jam nut and knob will turn at the same time).
4. At the new adjusting screw position, tighten jamnut firmly while holding the knob steady, or move the knob along the axis slightly.
5. Tighten the set screw firmly.

Cartridge
Basic code
FAR1-12

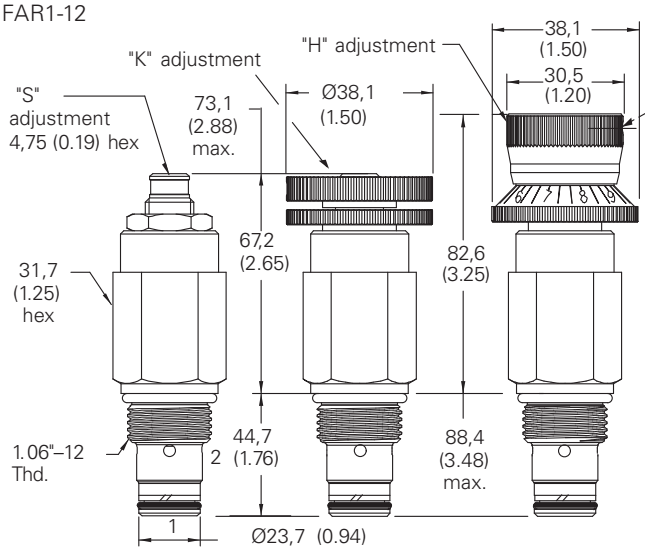

Installation Drawing (Steel)

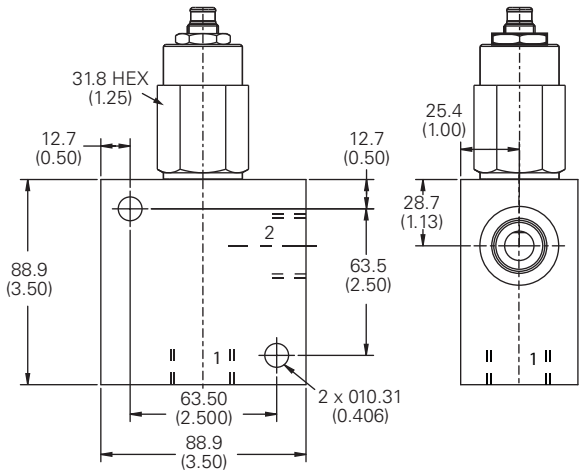

⚠ Warning

Aluminum housings can be used for pressures up to 210 bar (3000 psi). Steel housings **must** be used for operating pressures **above** 210 bar (3000 psi).

Where measurements are critical request certified drawings. We reserve the right to change specifications without notice.

FAR1-16 - Flow regulator

Fully adjustable, pressure compensated with free reverse flow
3.8-114 L/min (1-30 USgpm) • 310 bar (4500 psi)

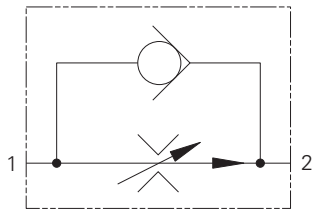

Operation

Flow into the inlet of the valve passes through the adjustable orifice and out of the regulated port. The pressure drop across the orifice is sensed on the regulating sleeve and produces a force which, at the required flow rate, overcomes the spring force. The resultant movement of the sleeve regulates the flow by closing the radial valve ports.

The inbuilt check allows free return of flow (2 to 1).

Features

Cartridge construction gives versatility of application. A valve may be fitted into a line body, a custom designed Hydraulic Integrated Circuit or directly into a cylinder or other actuator. Leakproof adjust screw gives easy, accurate adjustment to required flow setting. Hardened and ground working parts give accurate flow control and long working life.

Sectional view

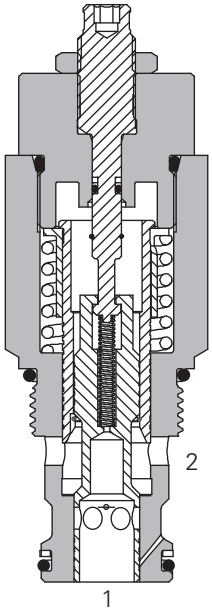

Performance data

Ratings and specifications

Performance data is typical with fluid at 21,8 cSt (105 SUS) and 49°C (120°F)		
Typical application pressure (all ports)		350 bar (5000 psi)
Min. pressure differential across valve		17 bar (250 psi)
Max. pressure differential across valve		328 bar (4750 psi)
Cartridge fatigue pressure (infinite life)		310 bar (4500 psi)
Rated flow		3,8–113,6 L/min (1–30 USgpm)
Temperature range		40° to 120°C (–40° to 248°F)
Flow regulation accuracy	3,8–15,1 L/min (1.0–4.0 USgpm) above 15,1–30,3 L/min (above 4.0–8.0 USgpm) above 30,3–113,6 L/min (above 8.0–30.0 USgpm)	±30% @5000 psi ±20% @5000 psi ±10% @5000 psi
Factory set maximum flow rate accuracy under standard test conditions and within the above ranges		
Reverse check crack pressure		1.7 bar (25 psi)
Leakage at shutoff position		0,55 L/min (33.5 in3/min)
Cavity		C–16–2
Fluids		All general purpose hydraulic fluids such as: MIL-H-5606, SAE 10, SAE 20 etc.
Filtration		Cleanliness code 18/**16/13**
Standard housing material		Aluminum or steel
Weight cartridge only		"S" 0,67 kg (1.48 lbs) "K" 0,70 kg (1.55 lbs) "H" 0,74 kg (1.62 lbs)
Seal kit		565810 (Buna-N) 889609 (Viton®)

Viton is a registered trademark of E.I. DuPont

Description

This is a two-port, restrictive flow regulator with a built in free flow check valve. Typical uses include the control of actuator speed by regulating the flow into or out of the actuator (meter-in or meter-out).

The flow (and actuator speed) will be largely independent of the load and the pressure conditions. If used to restrict flow from a fixed supply, for example a standard gear or piston pump, the valve will pass the required flow and any surplus flow will normally pass over the system relief valve.

Typical flow regulation

Cartridge only

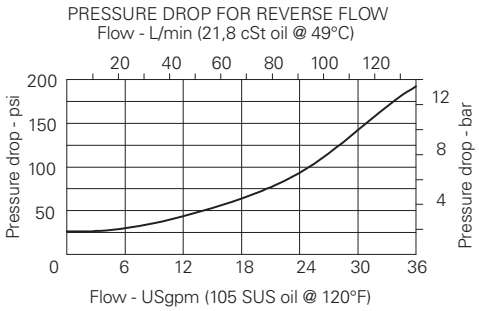

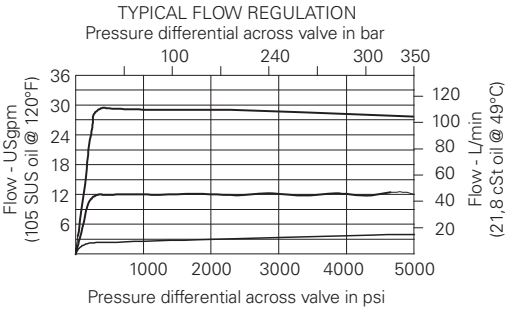

Where measurements are critical request certified drawings. We reserve the right to change specifications without notice.

FAR1-16 - Flow regulator

Fully adjustable, pressure compensated with free reverse flow
3.8-114 L/min (1-30 USgpm) • 310 bar (4500 psi)

Model code

FAR1	–	16	(V)	–	*	–	*	–	**	–	*.*	–	00
1		2	3		4		5		6		7		8

1 Function

FAR1 - Flow adjustable, pressure compensated flow regulator with reverse flow check

2 Size

16 - 16 Size

3 Seal material

Blank - Buna-N
V - Viton®

4 Adjustment

H - Calibrated handknob with locknut
K - Handknob with locknut
S - Screw with locknut

5 Valve housing material

Omit for cartridge only
A - Aluminum
S - Steel

6 Port size

Code	Port size	Housing number		
		Aluminium light duty	Aluminium fatigue rated	Steel fatigue rated
4G	1/2" BSPP	–	876716	02-175106
6B	3/4" BSPP	02-175463	–	–
6G	3/4" BSPP	–	876718	02-175107
10T	SAE 10	–	–	–
10H	SAE 10	–	876717	02-175104
12T	SAE 12	566149	–	–
12H	SAE 12	–	566113	02-175105

See section J for housing details.

7 Factory set flow rate

Blank - Normal factory setting at 15 USgpm user requested setting within 1-30 USgpm (3,8-113,6 L/min.)

8 Special features

00 – None
(Only required if valve has special features, omitted if "00")

Dimensions

mm (inch)

Torque cartridge in housing

A - 108–122 Nm (80–90 ft lbs)
S - 136–149 Nm (100–110 ft lbs)

Note: To reset scale and knob to an optimum viewing position:

1. Loosen the set screw
2. Rotate zero point on scale to a desired orientation.
3. Align mark on knob with zero on scale.
4. Tighten the set screw firmly.

Note: To change the setting:

1. Loosen the set screw
2. Loosen jamnut while holding the knob steady, or move the knob along the axis slightly.
3. Turn adjusting screw (jam nut and knob will turn at the same time).
4. At the new adjusting screw position, tighten jamnut firmly while holding the knob steady, or move the knob along the axis slightly.
5. Tighten the set screw firmly.

⚠ Warning

Aluminum housings can be used for pressures up to 210 bar (3000 psi). Steel housings **must** be used for operating pressures **above** 210 bar (3000 psi).

Cartridge
Basic code
FAR1-16

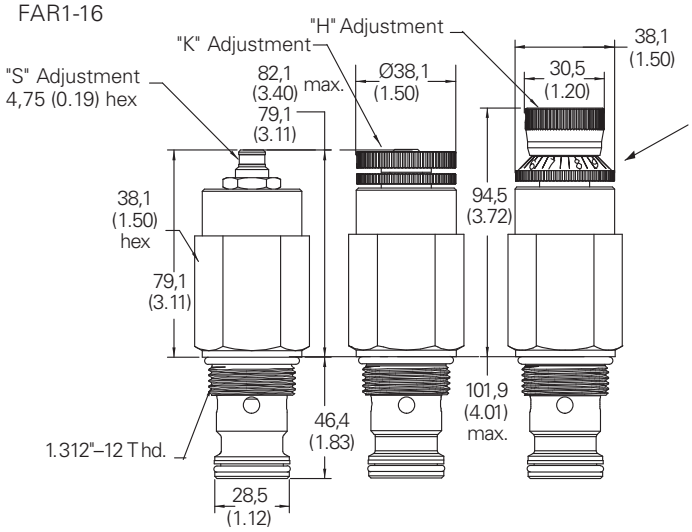

Installation drawing (Steel)

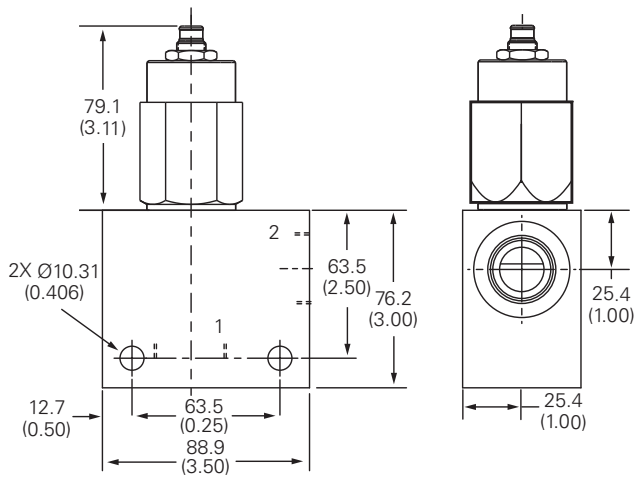

Where measurements are critical request certified drawings. We reserve the right to change specifications without notice.

PFR2-10 - Flow regulator

Priority flow regulator, adjustable

Description

The PFR2-10 is a limited range adjustable*, pressure compensated, priority type, flow regulator screw-in cartridge valve.

*The flow adjustment is from the factory set maximum flow rate down to 50% of that factory set flow rate.

Operation

This valve maintains a constant, factory-set, priority flow from port 1 to port 3 based on the setting adjustment, regardless of pressure changes downstream on port 3. Flow in excess of the priority setting is directed to port 2. If the priority flow at port 3 is blocked, the spool will shift to satisfy the priority flow requirement, thereby closing off flow to port 2.

Functional symbol

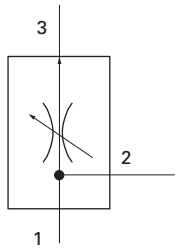

Sectional view

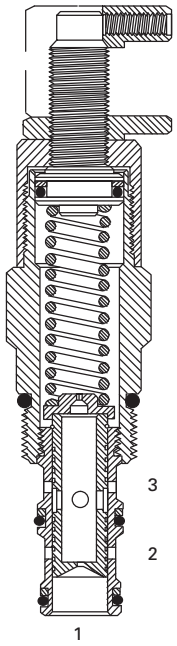

Ratings and specifications

Performance data is typical with fluid at 21,8 cSt (105 SUS) and 49°C (120°F)	
Typical application pressure (all ports)	210 bar (3000 psi)
Cartridge fatigue pressure (infinite life)	210 bar (3000 psi)
Rated flow	Maximum inlet flow 60 L/min (15 USgpm) Maximum regulated flow 38 L/min (10 USgpm)
Flow regulation accuracy	0,4–1,9 L/min (0.1–0.49 USgpm) ±20% 1,9–7,5 L/min (0.5–1.99 USgpm) ±15% 7,6–37,8 L/min (2.0–10.0 USgpm) ±10% Factory set maximum priority flow rate accuracy under standard test conditions and within the above ranges
Temperature range	-40° to 120°C (-40° to 248°F)
Cavity	C–10–3
Fluids	All general purpose hydraulic fluids such as: MIL–H–5606, SAE 10, SAE 20, etc.
Filtration	Cleanliness code 18/16/13
Standard housing materials	Aluminum
Weight cartridge only	0,25 kg (0.54 lb.)
Seal kits	565804 Buna-N 889599 Viton® Viton is a registered trademark of E.I. DuPont

Typical flow regulation

Cartridge only

A - Port 3, priority (regulated) outlet pressurized

B - Port 2, bypass outlet pressurized

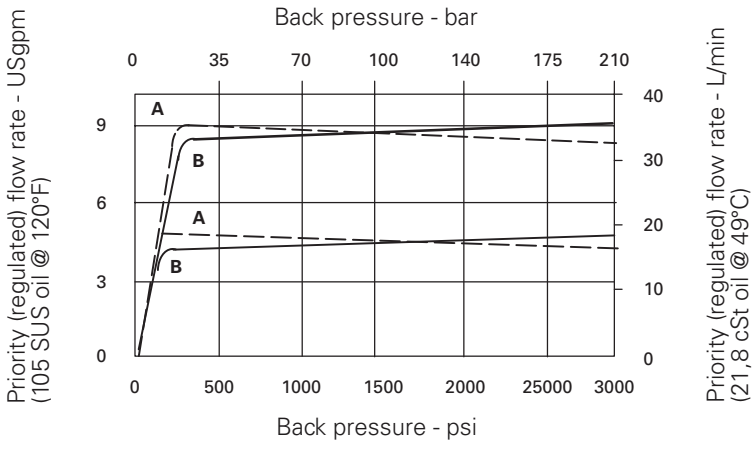

Where measurements are critical request certified drawings. We reserve the right to change specifications without notice.

Model code

PFR2 – 10 (V) – * – ** – *.* – 00

1 2 3 4 5 6 7

1 Function
PFR2 - Priority flow regulator

2 Size
10 - 10 Size

3 Seals
Blank - Buna-N
V - Viton®

4 Adjustment
C - Cap
K - Knob
S - Screw

5 Port size
0 - Cartridge only

Code	Port size	Housing number	
		Aluminium light duty	Aluminium fatigue rated
3B	3/8" BSPP	02–173358	–
6T	SAE 6	566162	–
2G	1/4" BSPP	–	876705
3G	3/8" BSPP	–	876714
6H	SAE 6	–	876704
8H	SAE 8	–	876711

See section J for housing details.

6 Factory set flow rate, nominal
(Specify in USgpm) Range 0,38–37,8 L/min (0.1–10.0 USgpm)

7 Special features
00 – None
(Only required if valve has special features, omitted if "00".)

Dimensions
mm (inch)

Torque cartridge in aluminum housing to 47–54 Nm (35–40 ft.lbs)

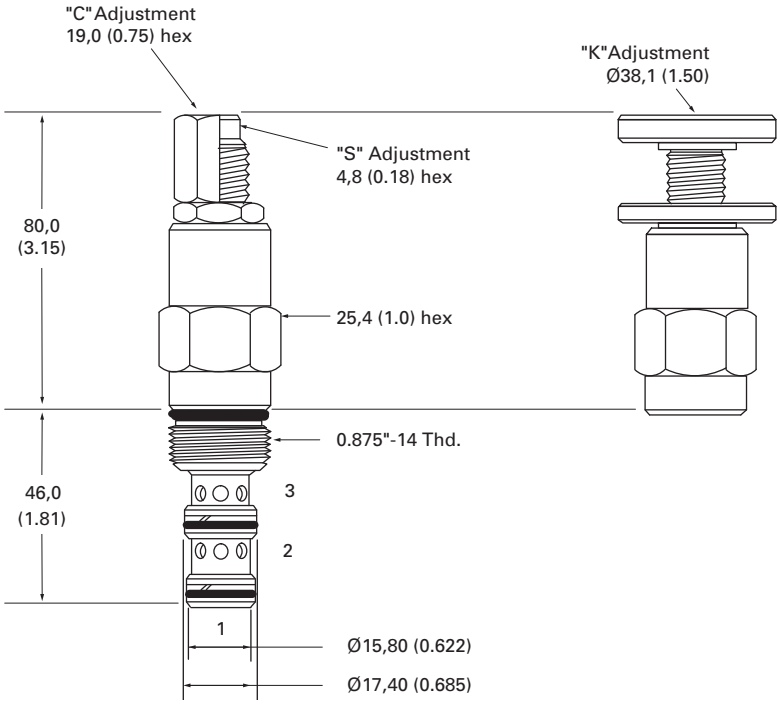

H

Where measurements are critical request certified drawings. We reserve the right to change specifications without notice.

PFR5-8 - Flow regulator

Fixed, priority type, pressure compensated
Up to 10 L/min (2.5 USgpm) • 280 bar (4000 psi)

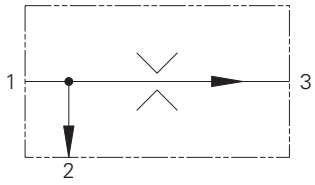

Operation

Inlet flow passes through the fixed orifice and the radial holes in the spool/sleeve assembly then out of the regulated port. The pressure drop across the orifice is sensed at each end of the spool, producing a force which, at the required flow rate, overcomes the spring force. The resultant movement of the spool regulates the flow by opening the radial valve ports to the bypass port and closing the regulated flow ports.

The valve will pass flow in the return direction but this is restricted by the flow path through the control orifice.

Features

Cartridge construction gives versatility of application. A valve may be fitted into a line body, a custom designed Hydraulic Integrated Circuit or directly into a cylinder or other actuator. Leakproof adjust screw gives easy, accurate adjustment to required flow setting. Hardened and ground working parts give accurate flow control and long working life.

Sectional view

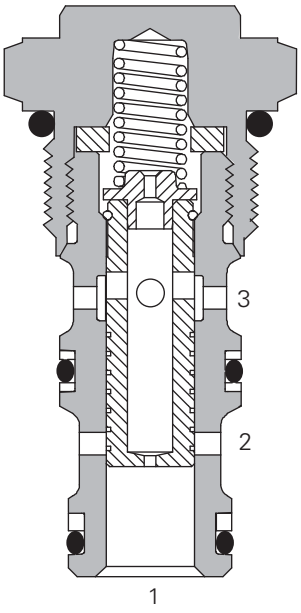

Performance data

Ratings and specifications

Performance data is typical with fluid at 21,8 cSt (105 SUS) and 49°C (120°F)		
Typical application pressure (all ports)		350 bar (5000 psi) in steel housing
Cartridge fatigue pressure (infinite life)		280 bar (4000 psi)
Rated flow	maximum inlet flow maximum regulated flow	15,1 L/min (4 USgpm) 10 L/min (2.5 USgpm)
Temperature range		-40° to 120°C (-40° to 248°F)
Internal leakage		82 cm^3/min. @ 350 bar (3000 psi) 5 in^3 /min @ 5000 psi)
Flow regulation accuracy	0,4–1,9 L/min (0.1–0.49 USgpm) 0,4–1,9 L/min (0.1–0.49 USgpm) 1,9–5,7 L/min (0.5–1.49 USgpm) 5,7–10 L/min (1.5–2.5 USgpm)	±20% @ 210 bar (3000 psi) ±40% @ 350 bar (5000 psi) ±15% @ 350 bar (5000 psi) ±10% @ 350 bar (5000 psi)
Factory set maximum flow rate accuracy under standard test conditions and within the above ranges		
Cavity		C–8–3
Fluids		All general purpose hydraulic fluids such as MIL-H-5606, SAE 10, SAE 20 etc.
Filtration		Cleanliness code 18/**16/13**
Standard housing material		Aluminum or steel
Weight cartridge only		0,07 kg (0.15 lbs)
Seal kit		02–173427 (Buna-N) 02–173434 (Viton®)

Viton is a registered trademark of E.I. DuPont

Description

These valves are priority flow regulators. The flow (and actuator speed) will be largely independent of the load and the pressure conditions.

If used to regulate flow from a fixed supply, for example a standard gear or piston pump, the valve will pass the required flow and any surplus flow will be diverted to the bypass port. The bypass flow may be used for a secondary circuit whether the secondary pressure requirement is higher or lower than the regulated pressure.

The valve inlet pressure will be approximately 7 bar (100 psi) more than the regulated or bypass pressure, whichever is higher.

Typical flow regulation

Cartridge only

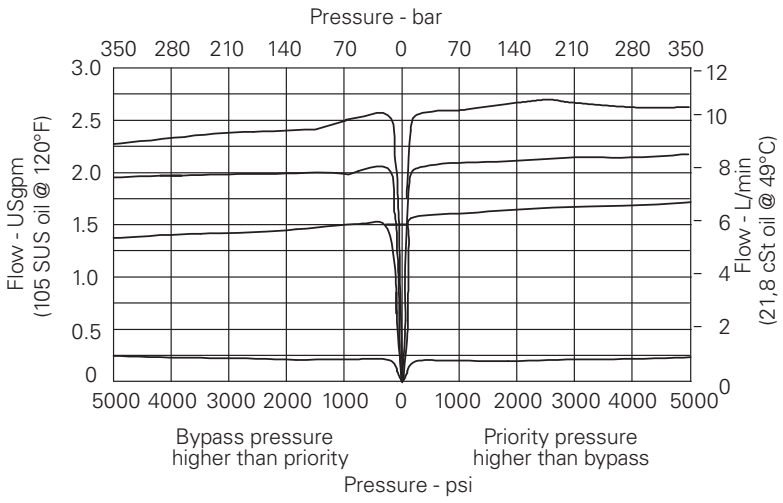

Where measurements are critical request certified drawings. We reserve the right to change specifications without notice.

PFR5-8 - Flow regulator

Fixed, priority type, pressure compensated
Up to 10 L/min (2.5 USgpm) • 280 bar (4000 psi)

Model code

**PFR5 – 8 (V) – F – (*) – ** – *.* – **

1 2 3 4 5 6 7 8

1 Function
PFR5 - Priority flow regulator

2 Size
8 - 8 size

3 Seals
Blank - Buna-N
V - Viton®

4 Adjustment
F - Fixed orifice

5 Valve housing material
Omit for cartridge only
S - Steel
A - Aluminum

6 Port size

Code	Port size	Housing number	
		Aluminium fatigue rated	Steel fatigue rated
0	Cartridge only		
4T	SAE 4	02–160741	02-160745
6T	SAE 6	02–160742	02-160746
2G	1/4" BSPP	02–160739	02-160743
3G	3/8" BSPP	02–160740	02-160744

See section J for housing details.

7 Factory set flow rate
(Specify in USgpm)
Range 0,4–9,5 L/min
(0.1–2.5 USgpm)

Example: 0.5–1,9 L/min
(0.5 USgpm)

8 Special features
00 – None
(Only required if valve has special features, omitted if "00")

SS - 316 Stainless Steel external components

Dimensions
mm (inch)

Torque cartridge in steel or aluminum housing to 34–41 Nm (25–30 ft lbs).

Cartridge
Basic code
PFR5-8

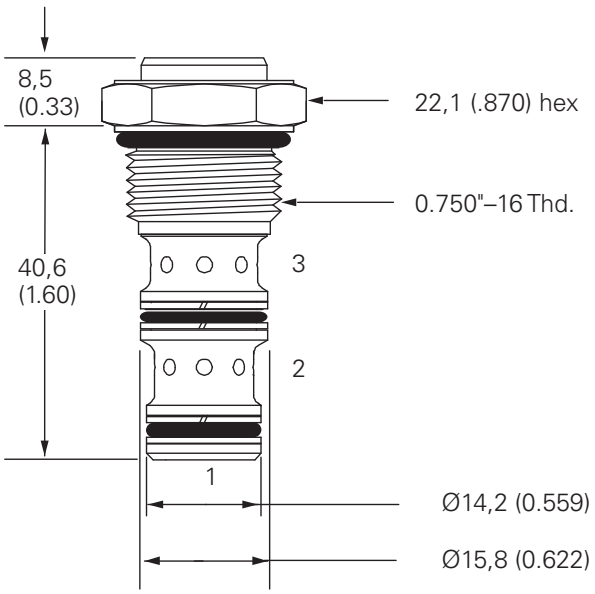

Installation drawing (Steel)

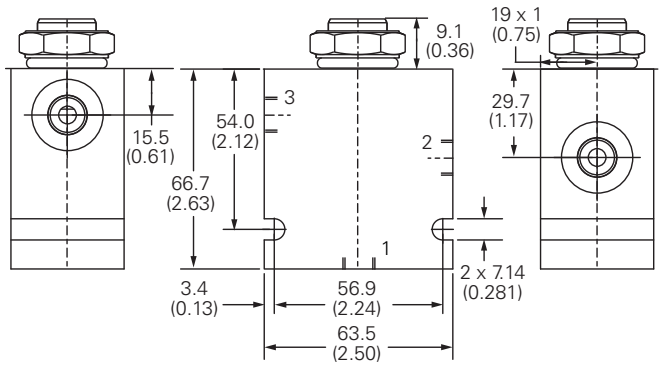

⚠ Warning
Aluminum housings can be used for pressures up to 210 bar (3000 psi). Steel housings **must** be used for operating pressures **above** 210 bar (3000 psi).

Where measurements are critical request certified drawings. We reserve the right to change specifications without notice.

PFR5-10 - Flow regulator

Fixed, priority type, pressure compensated
Up to 23 L/min (6 USgpm) • 280 bar (4000 psi)

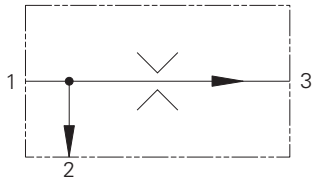

Operation

Inlet flow passes through the fixed orifice and the radial holes in the spool/sleeve assembly then out of the regulated port. The pressure drop across the orifice is sensed at each end of the spool, producing a force which, at the required flow rate, overcomes the spring force. The resultant movement of the spool regulates the flow by opening the radial valve ports to the bypass port and closing the regulated flow ports.

The valve will pass flow in the return direction but this is restricted by the flow path through the control orifice.

Features

Cartridge construction gives versatility of application. A valve may be fitted into a line body, a custom designed Hydraulic Integrated Circuit or directly into a cylinder or other actuator. Leakproof adjust screw gives easy, accurate adjustment to required flow setting. Hardened and ground working parts give accurate flow control and long working life.

Sectional view

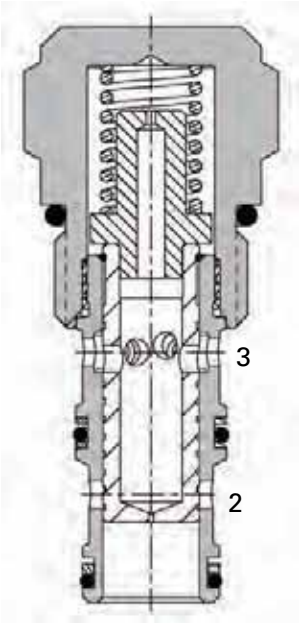

Performance data

Ratings and specifications

Performance data is typical with fluid at 21,8 cSt (105 SUS) and 49°C (120°F)		
Typical application pressure (all ports)		350 bar (5000 psi)
Cartridge fatigue pressure (infinite life)		280 bar (4000 psi)
Rated flow		Maximum inlet flow 60 L/min (15 USgpm) Maximum regulated flow 23 L/min (6 USgpm)
Temperature range		-40° to 120°C (-40° to 248°F)
Internal leakage		82 cm^3/min @ 350 bar (3000 psi) 5 in^3/min @ 5000 psi)
Flow regulation accuracy	0,4–1,9 L/min (0.1–0.49 USgpm) 0,4–1,9 L/min (0.1–0.49 USgpm) 1,9–5,7 L/min (0.5–1.49 USgpm) 5,7–22,7 L/min (1.5–6 USgpm)	±20% @ 210 bar (3000 psi) ±40% @ 350 bar (5000 psi) ±15% @ 350 bar (5000 psi) ±10% @ 350 bar (5000 psi)
Factory set maximum flow rate accuracy under standard test conditions and within the above ranges		
Cavity		C–10–3
Fluids		All general purpose hydraulic fluids such as MIL-H-5606, SAE 10, SAE 20 etc.
Filtration		Cleanliness code 18/**16/13**
Standard housing material		Aluminum or steel
Weight cartridge only		0,13 kg (0.28 lbs)
Seal kit		565804 (Buna-N) 889599 (Viton®)

Viton is a registered trademark of E.I. DuPont

Description

These valves are priority flow regulators. The flow (and actuator speed) will be largely independent of the load and the pressure conditions.

If used to regulate flow from a fixed supply, for example a standard gear or piston pump, the valve will pass the required flow and any surplus flow will be diverted to the bypass port. The bypass flow may be used for a secondary circuit whether the secondary pressure requirement is higher or lower than the regulated pressure.

The valve inlet pressure will be approximately 7 bar (100 psi) more than the regulated or bypass pressure, whichever is higher.

Typical flow regulation

Cartridge only

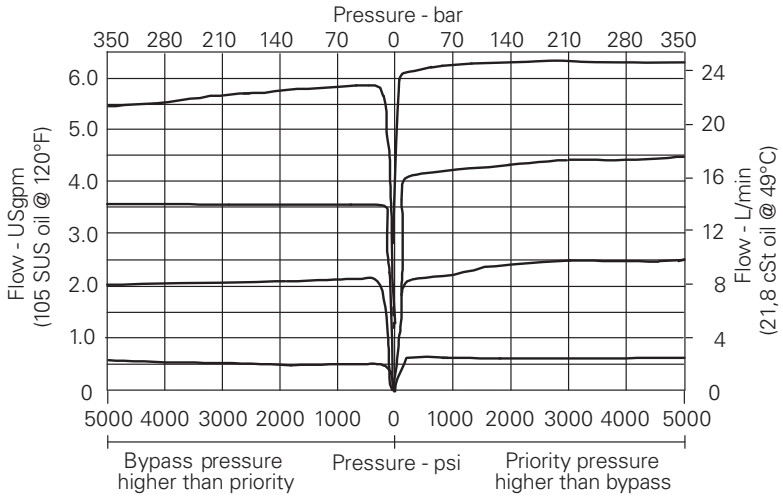

Where measurements are critical request certified drawings. We reserve the right to change specifications without notice.

PFR5-10 - Flow regulator

Fixed, priority type, pressure compensated
Up to 23 L/min (6 USgpm) • 280 bar (4000 psi)

Model code

PFR5 – 10 (V) – F – * – ** – *.* – 00
1 2 3 4 5 6 7 8

1 Function
PFR5 - Priority flow regulator

2 Size
10 - 10 size

3 Seals
Blank - Buna-N
V - Viton®

4 Adjustment
F - Fixed orifice

5 Valve housing material
Omit for cartridge only
S - Steel
A - Aluminum

6 Port size

Code	Port size	Housing number		
		Aluminium light duty	Aluminium fatigue rated	Steel
0	Cartridge only			
2G	1/4" BSPP	–	876705	02-175127
3B	3/8" BSPP	02–173358	–	–
3G	3/8" BSPP	–	876714	02-175128
6T	SAE 6	566162	–	02-175124
6H	SAE 6	–	876704	–
8H	SAE 8	–	876711	–
8T	SAE 8	–	02-175125	–

See section J for housing details.

7 Factory set flow rate
(Specify in USgpm)
Range 0,38-22,7 L/min
(0.1-6.0 USgpm)

Example: 0.5–1,9 L/min
(0.5 USgpm)

8 Special features
00 – None
(Only required if valve has special features, omitted if "00")

Dimensions
mm (inch)

Torque cartridge in housing
A - 47-54 Nm (35-40 ft lbs)
B - 68-75 Nm (50-55 ft lbs)

Note: For applications above 210 bar (3000 psi) please consult our technical department or use the steel body option.

Cartridge
Basic code
PFR5-10

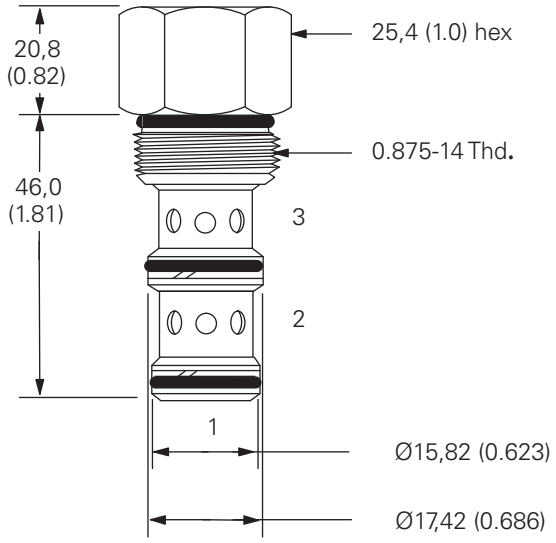

Installation drawing (Steel)

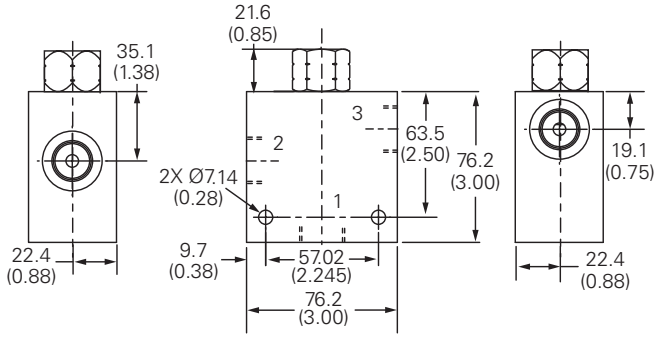

Where measurements are critical request certified drawings. We reserve the right to change specifications without notice.

H

PFR15-10 - Flow regulator

Fixed, priority type, pressure compensated
Up to 38 L/min (10 USgpm) • 350 bar (5000 psi)

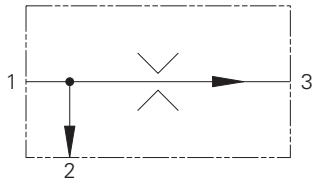

Operation

Inlet flow passes through the fixed orifice and the radial holes in the spool/sleeve assembly then out of the regulated port. The pressure drop across the orifice is sensed at each end of the spool, producing a force which, at the required flow rate, overcomes the spring force. The resultant movement of the spool regulates the flow by opening the radial valve ports to the bypass port and closing the regulated flow ports.

The valve will pass flow in the return direction but this is restricted by the flow path through the control orifice.

Features

Cartridge construction gives versatility of application. A valve may be fitted into a line body, a custom designed Hydraulic Integrated Circuit or directly into a cylinder or other actuator. Leakproof adjust screw gives easy, accurate adjustment to required flow setting. Hardened and ground working parts give accurate flow control and long working life.

Sectional view

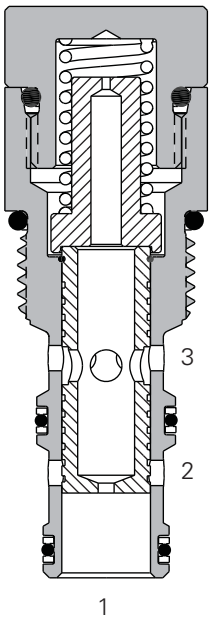

Performance data

Ratings and specifications

Performance data is typical with fluid at 21,8 cSt (105 SUS) and 49° C (120° F)	
Typical Application pressure (all ports)	350 bar (5000 psi)
Cartridge fatigue pressure (infinite life)	350 bar (5000 psi)
Rated flow	Maximum inlet flow 64 L/min (17 USgpm) Maximum regulated flow 38 L/min (10 USgpm)
Flow regulation accuracy	0,4-1,9 L/min (0.1-0.49 USgpm) ±20% @ 210 bar (3000 psi) 0,4-1,9 L/min (0.1-0.49 USgpm) ±40% @ 350 bar (5000 psi) 1,9-5,7 L/min (0.5-1.49 USgpm) ±15% @ 350 bar (5000 psi) 5,7-22,7 L/min (1.5-6 USgpm) ±10% @ 350 bar (5000 psi) Factory set maximum priority flow rate accuracy under standard test conditions and within the above ranges
Temperature range	-40° to 120°C (-40° to 248°F)
Cavity	C-10-3
Fluids	All general purpose hydraulic fluids such as MIL-H-5606, SAE 10, SAE 20, etc.
Filtration	18/**16/13**
Standard housing materials	Aluminum or Steel
Weight cartridge only	0,13 kg (0.28 lb.)
Seal kit	565804 (Buna-N), 889599 (Viton®)

Viton is a registered trademark of E.I. DuPont

Description

These valves are priority flow regulators. The flow (and actuator speed) will be largely independent of the load and the pressure conditions.

If used to regulate flow from a fixed supply, for example a standard gear or piston pump, the valve will pass the required flow and any surplus flow will be diverted to the bypass port. The bypass flow may be used for a secondary circuit whether the secondary pressure requirement is higher or lower than the regulated pressure.

The valve inlet pressure will be approximately 7 bar (100 psi) more than the regulated or bypass pressure, whichever is higher.

Typical flow regulation

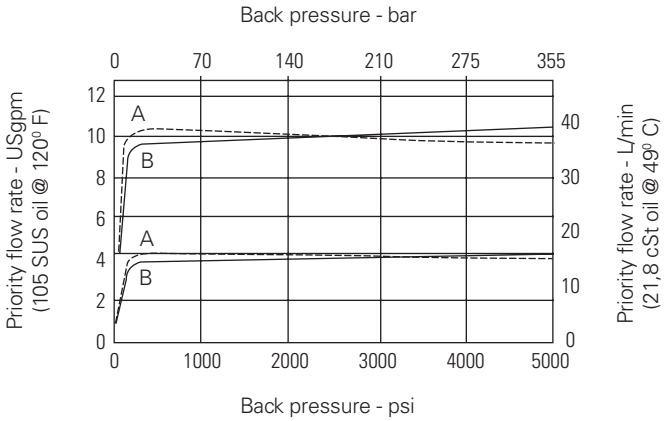

A - Port 3, priority (regulated outlet) pressurized.
B - Port 2, (bypass outlet) pressurized.

Where measurements are critical request certified drawings. We reserve the right to change specifications without notice.

PFR15-10 - Flow regulator

Fixed, priority type, pressure compensated
Up to 38 L/min (10 USgpm) • 350 bar (5000 psi)

Model code

PFR15 – 10 (V) – F – * – ** – *.* – 00

1 2 3 4 5 6 7 8

1 Function
PFR15 - Priority flow regulator

2 Size
10 - 10 Size

3 Seals
Blank - Buna-N
V - Viton®

4 Adjustment
F - Fixed orifice

5 Valve housing material
Omit for cartridge only
S - Steel
A - Aluminum

6 Port size
0 - Cartridge only

Code	Port size		Housing number - body only	
			Aluminium fatigue rated	Steel
2G	1/4" BSPP	—	876705	
3G	3/8" BSPP	—	876714	
6H	SAE 6	—	876704	
8H	SAE 8	—	876711	
2G	1/4" BSPP			02-175127
3G	3/6" BSPP			02-175128
6T	SAE 6			02-175124
8T	SAE 8			02-175125

See section J for housing details.

7 Factory set flow rate, nominal
(Specify in USgpm)
Range 0,38-38 L/min
(0.1-10 USgpm)

8 Special features
00 - None
(Only required if valve has special features, omitted if "00.")

Dimensions
mm (inch)

Note: Torque cartridge in housing
A - 47-54 Nm (35-40 ft. lbs)
S - 68-75 Nm (50-55 ft. lbs)

Cartridge only
Basic code
PFR15-10

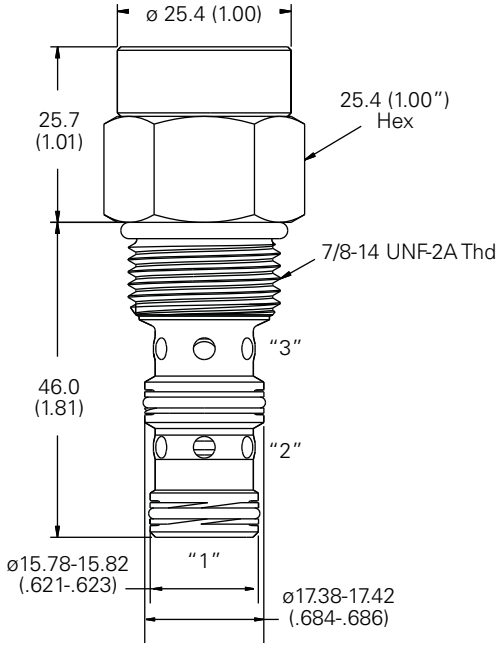

Installation drawing (Steel)

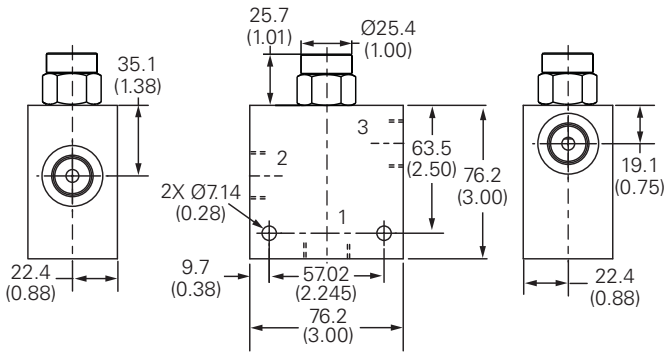

⚠ Warning
Aluminum housings can be used for pressures up to 210 bar (3000 psi) Steel housings must be used for operating pressures above 210 bar (3000 psi).

Where measurements are critical request certified drawings. We reserve the right to change specifications without notice.

PFR11-12 - Flow regulator

Fixed, priority type, pressure compensated
Up to 30 L/min (8 USgpm) • 350 bar (5000 psi)

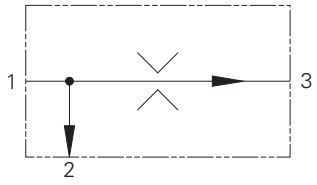

Operation

Inlet flow passes through the fixed orifice and the radial holes in the spool/sleeve assembly then out of the regulated port. The pressure drop across the orifice is sensed at each end of the spool, producing a force which, at the required flow rate, overcomes the spring force. The resultant movement of the spool regulates the flow by opening the radial valve ports to the bypass port and closing the regulated flow ports.

The valve will pass flow in the return direction but this is restricted by the flow path through the control orifice.

Features

Cartridge construction gives versatility of application. A valve may be fitted into a line body, a custom designed Hydraulic Integrated Circuit or directly into a cylinder or other actuator. Leakproof adjust screw gives easy, accurate adjustment to required flow setting. Hardened and ground working parts give accurate flow control and long working life.

Sectional view

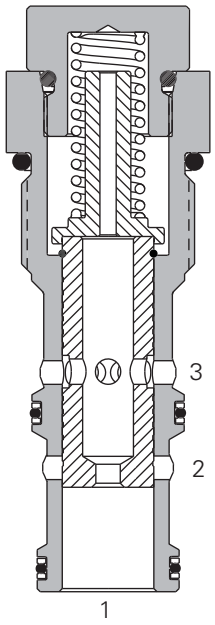

Performance data

Ratings and specifications

Performance data is typical with fluid at 21,8 cSt (105 SUS) and 49° C (120° F)	
Typical Application pressure (all ports)	350 bar (5000 psi)
Cartridge fatigue pressure (infinite life)	350 bar (5000 psi)
Rated flow	Maximum inlet flow 76 L/min (20 USgpm) Maximum regulated flow 30 L/min (8 USgpm)
Flow regulation accuracy	1,9-10,9 L/min (0.5-2.9 USgpm) ±15% 11,4-114 L/min (3-30 USgpm) ±10%
Factory set maximum priority flow rate accuracy under standard test conditions and within the above ranges	
Temperature range	-40° to 120°C (-40° to 248°F)
Cavity	C-12-3
Fluids	All general purpose hydraulic fluids such as: MIL-H-5606, SAE 10, SAE 20, etc.
Filtration	18/**16/13**
Standard housing materials	Aluminum or Steel
Weight cartridge only	0,25 kg (0.55 lbs)
Seal kit	9900171 (Buna-N) 9900172 (Viton®)

Viton is a registered trademark of E.I. DuPont

Description

These valves are priority flow regulators. The flow (and actuator speed) will be largely independent of the load and the pressure conditions.

If used to regulate flow from a fixed supply, for example a standard gear or piston pump, the valve will pass the required flow and any surplus flow will be diverted to the bypass port. The bypass flow may be used for a secondary circuit whether the secondary pressure requirement is higher or lower than the regulated pressure.

The valve inlet pressure will be approximately 7 bar (100 psi) more than the regulated or bypass pressure, whichever is higher.

Typical flow regulation

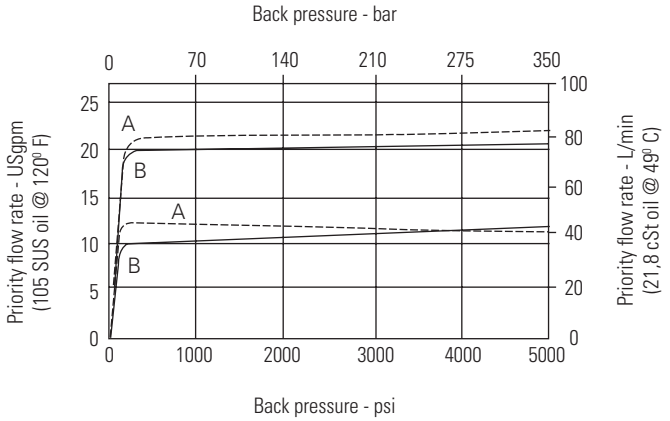

A - Port 3, priority (regulated outlet) pressurized.
B - Port 2, (bypass outlet) pressurized.

Where measurements are critical request certified drawings. We reserve the right to change specifications without notice.

PFR11-12 - Flow regulator

Fixed, priority type, pressure compensated
Up to 30 L/min (8 USgpm) • 350 bar (5000 psi)

Model code

PFR11	–	12	(V)	–	F	–	***	–	*.*	–	00
1		2	3		4		5		6		7

1 Function
PFR11 - Priority flow regulator

2 Size
12 - 12 Size

3 Seals
Blank - Buna-N
V - Viton®

4 Adjustment
F - Fixed orifice

5 Port size
0 - Cartridge only

Code	Port size	Housing number - body only	
		Aluminium	Steel
A4G	1/2" BSPP	02-161817	
A6G	3/4" BSPP	02-161816	
A10H	SAE 10	02-160642	
A12H	SAE 12	02-160646	
S4G	1/2" BSPP		02-169815
S6G	3/4" BSPP		02-169814
S10T	SAE 10		02-161070
S12T	SAE 12		02-169816

See section J for housing details.

6 Factory set flow rate
(Specify in USgpm)
Range 1,9-76 L/min
(0.5-20 USgpm)

7 Special features
00 - None
(Only required if valve has special features, omitted if "00.")

Dimensions
mm (inch)

Cartridge only
Basic code
PFR11-12

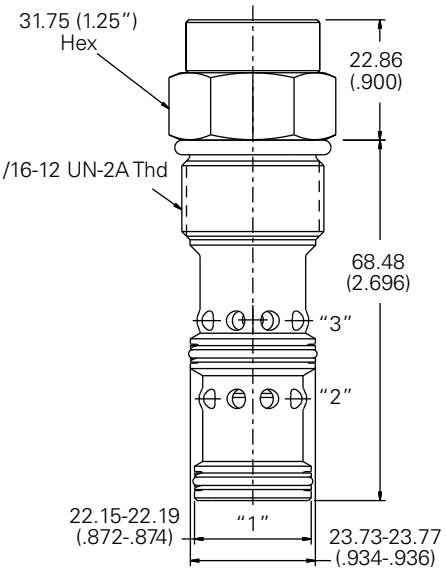

Installation drawing (Steel)

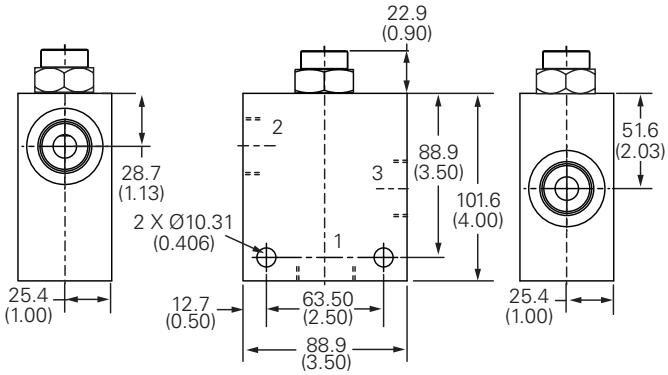

Note: Torque cartridge in aluminum housing to 81-95 Nm (60-70 ft. lbs)

Note: Torque cartridge in steel housing to 102-115 Nm (75-85 ft. lbs)

⚠ Warning
Aluminum housings can be used for pressures up to 210 bar (3000 psi) Steel housings must be used for operating pressures above 210 bar (3000 psi).

Where measurements are critical request certified drawings. We reserve the right to change specifications without notice.

PFR1 1-16 - Flow regulator

Fixed, priority type, pressure compensated
Up to 114 L/min (30 USgpm) • 350 bar (5000 psi)

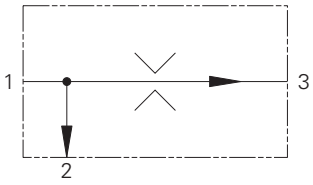

Operation

Inlet flow passes through the fixed orifice and the radial holes in the spool/sleeve assembly then out of the regulated port. The pressure drop across the orifice is sensed at each end of the spool, producing a force which, at the required flow rate, overcomes the spring force. The resultant movement of the spool regulates the flow by opening the radial valve ports to the bypass port and closing the regulated flow ports.

The valve will pass flow in the return direction but this is restricted by the flow path through the control orifice.

Features

Cartridge construction gives versatility of application. A valve may be fitted into a line body, a custom designed Hydraulic Integrated Circuit or directly into a cylinder or other actuator. Leakproof adjust screw gives easy, accurate adjustment to required flow setting. Hardened and ground working parts give accurate flow control and long working life.

Sectional view

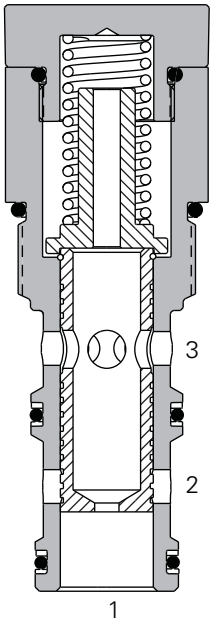

Performance data

Ratings and specifications

Performance data is typical with fluid at 21,8 cSt (105 SUS) and 49° C (120° F)	
Typical Application pressure (all ports)	350 bar (5000 psi)
Cartridge fatigue pressure (infinite life)	350 bar (5000 psi)
Rated flow	Maximum inlet flow 151 L/min (40 USgpm) Maximum regulated flow 114 L/min (30 USgpm)
Flow regulation accuracy	1,9-10,9 L/min (0.5-2.9 USgpm) ±15% 11,4-114 L/min (3-30 USgpm) ±10%
Factory set maximum priority flow rate accuracy under standard test conditions and within the above ranges	
Temperature range	-40° to 120°C (-40° to 248°F)
Cavity	C-16-3
Fluids	All general purpose hydraulic fluids such as: MIL-H-5606, SAE 10, SAE 20, etc.
Filtration	18/**16/13**
Standard housing materials	Aluminum or Steel
Weight cartridge only	0,38 kg (0.84 lb.)
Seal kit	565811 (Buna-N), 889610 (Viton®)

Viton is a registered trademark of E.I. DuPont

Description

Inlet flow passes through the fixed orifice and the radial holes in the spool/sleeve assembly then out of the regulated port. The pressure drop across the orifice is sensed at each end of the spool, producing a force which, at the required flow rate, overcomes the spring force. The resultant movement of the spool regulates the flow by opening the radial valve ports to the bypass port and closing the regulated flow ports.

The valve will pass flow in the return direction but this is restricted by the flow path through the control orifice.

Typical flow regulation

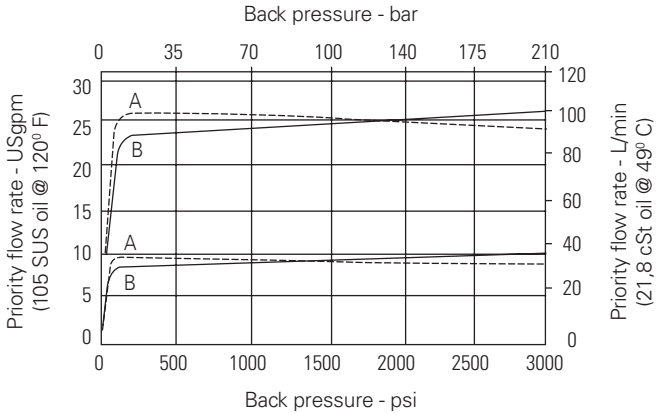

A - Port 3, priority (regulated outlet) pressurized.
B - Port 2, (bypass outlet) pressurized.

Where measurements are critical request certified drawings. We reserve the right to change specifications without notice.

PFR11-16 - Flow regulator

Fixed, priority type, pressure compensated
Up to 114 L/min (30 USgpm) • 350 bar (5000 psi)

Model code

PFR11 – 16 (V) – F – * – *.* – 00**

1 2 3 4 5 6 7

1 Function

PFR11 - Priority flow regulator

2 Size

16 - 16 Size

3 Seals

Blank - Buna-N
V - Viton®

4 Adjustment

F - Fixed orifice

5 Port size

Code	Port size	Housing number - body only		
		Aluminium light duty	Aluminium fatigue rated	Steel
A12T	SAE 12	566152		
A10H	SAE 10		876721	
A12H	SAE 12		876723	
A4G	1/2" BSPP		876720	
A6G	3/4" BSPP		876722	
S4G	1/2" BSPP			02-175131
S6G	3/4" BSPP			02-175132
S10T	SAE 10			02-175129
S12T	SAE 12			02-175130

See section J for housing details.

6 Factory set flow rate

(Specify in USgpm)
Range 1,9-76 L/min
(0.5-20 USgpm)

7 Special features

00 - None
(Only required if valve has special features, omitted if "00.")

Dimensions

mm (inch)

Note: Torque cartridge in aluminum housing to 108-122 Nm (80-90 ft. lbs)

Note: Torque cartridge in steel housing to 136-149.6 Nm (100-110 ft. lbs)

Cartridge Only
Basic code
PFR11-16

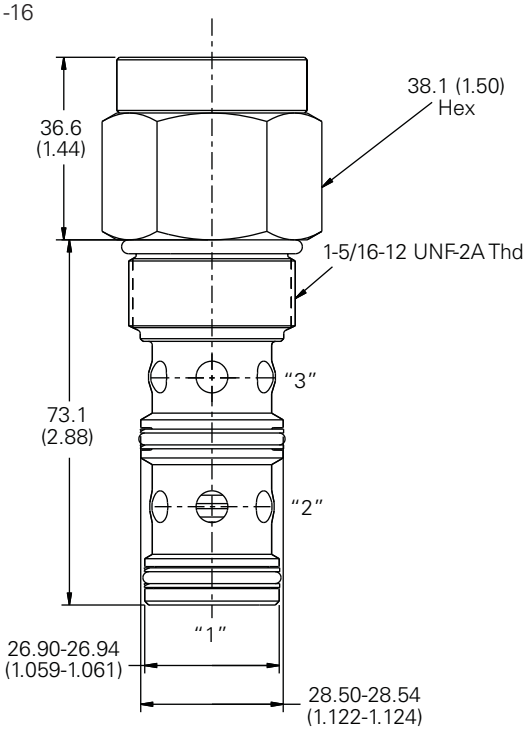

Installation drawing (Steel)

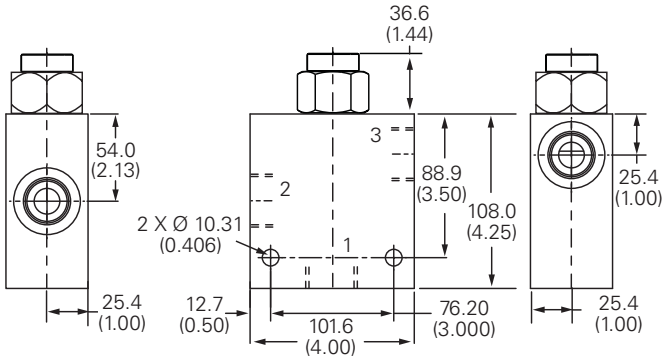

⚠ Warning

Aluminum housings can be used for pressures up to 210 bar (3000 psi) Steel housings must be used for operating pressures above 210 bar (3000 psi).

H

Where measurements are critical request certified drawings. We reserve the right to change specifications without notice.

2CFP60 - Flow regulator

Adjustable, priority type pressure compensated
4-60 L/min (1-16 USgpm) • 350 Bar (5000 psi)

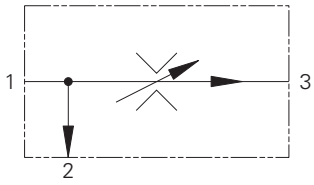

Operation

Inlet flow passes through the adjustable orifice and the radial holes in the spool/sleeve assembly then out of the regulated port. The pressure drop across the orifice is sensed at each end of the spool, producing a force which, at the required flow rate, overcomes the spring force. The resultant movement of the spool regulates the flow by opening the radial valve ports to the bypass port and closing the regulated flow ports.

The valve will pass flow in the return direction but this is restricted by the flow path through the control orifice.

Features

Cartridge construction gives versatility of application. A valve may be fitted into a line body, a custom designed Hydraulic Integrated Circuit or directly into a cylinder or other actuator. Leakproof adjust screw gives easy, accurate adjustment to required flow setting. Hardened and ground working parts give accurate flow control and long working life.

Sectional view

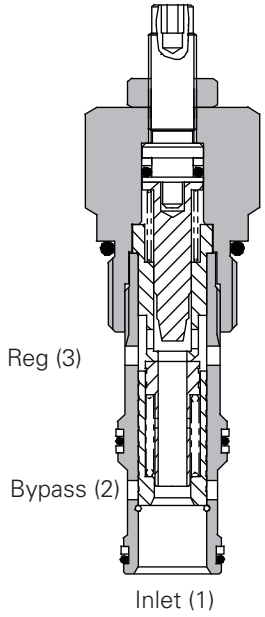

Performance data

Ratings and specifications

Figures based on Oil Temp of 40˚C and of 32 cST (150 SUS)	
Rated flow	Inlet: 90 L/min (24 USgpm) Reg: 4-60 L/min (1-16 USgpm)
Maximum pressure	350 bar (5000 psi)
Cartridge material	Working parts hardened & ground steel. Zinc plated body
Standard housing material	Aluminum (up to 210 bar*) Add suffix "377" for steel option
Mounting position	Unrestricted
Cavity Number	CVA-27-04-0 (See Section M)
Torque cartridge into cavity	75 Nm (55 ft lbs)
Weight	2CFP60: 0,16 kg (0.35 lbs) 2CFP65: 1,80 kg (3.76 lbs)
Seal kit number	SK579 (Nitrile), SK579V (Viton®)
Recommended filtration level	BS5540/4 Class 18/13 (25 micron nominal)
Operating temperature	–30° to +90° C (–22° to +194° F)
Nominal range	5 to 500 cSt

Viton is a registered trademark of E.I. DuPont

Description

These valves are priority flow regulators. The flow (and actuator speed) will be largely independent of the load and the pressure conditions.

If used to regulate flow from a fixed supply, for example a standard gear or piston pump, the valve will pass the required flow and any surplus flow will be diverted to the bypass port. The bypass flow may be used for a secondary circuit whether the secondary pressure requirement is higher or lower than the regulated pressure.

The valve inlet pressure will be approximately 7 bar (100 psi) more than the regulated or bypass pressure, whichever is higher.

Pressure drop

Cartridge only

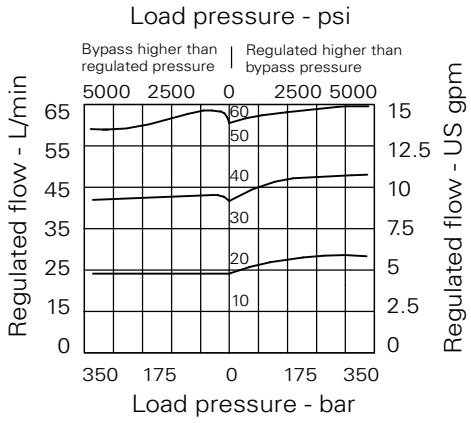

Where measurements are critical request certified drawings. We reserve the right to change specifications without notice.

2CFP60 - Flow regulator

Adjustable, priority type pressure compensated
4-60 L/min (1-16 USgpm) • 350 Bar (5000 psi)

Model code

2CFP**	–	P	4W	–	4	S
1		2	3		4	5

1 Basic code

2CFP60 - Cartridge only
2CFP65 - Cartridge & body

2 Adjustment means

P - Leakproof screw adjustment
R - Handknob adjustment
(See page H-6 for dimensions)

3 Port size

Code	Port size	Housing number	
		Aluminium	Steel
4W	1/2" BSP	B12631	B13664
8T	1/2" BSP	B10820	B11566

4 Adjustable flow range

4 - 4-40 L/min
Standard setting 30 L/min

6 - 6-60 L/min
Standard setting 40 L/min

5 Seals

S - Nitrile (for use with most industrial hydraulic oils)

SV - Viton (for high temperature & most special fluid applications)

Dimensions

mm (inch)

Note: For applications above 210 bar (3000 psi) please consult our technical department or use the steel body option.

Cartridge only

Basic code
2CFP60

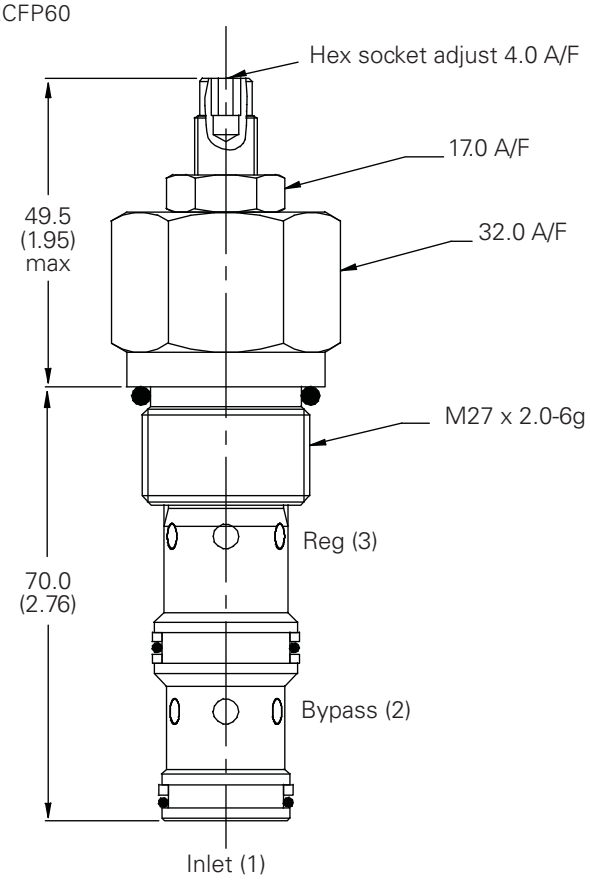

Complete valve

1/2" Ports
Basic code
2CFP65

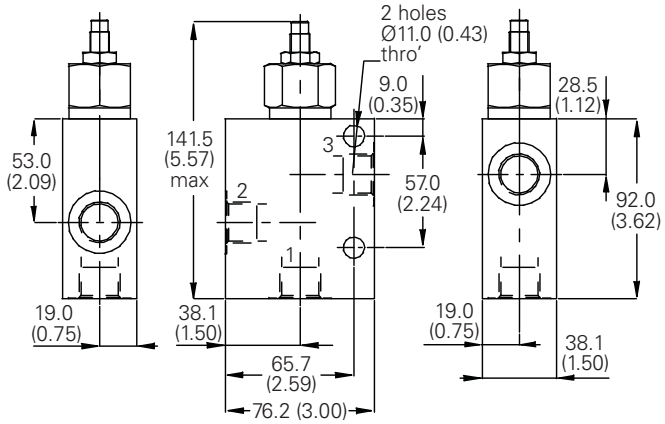

H

Where measurements are critical request certified drawings. We reserve the right to change specifications without notice.

PFR12-10 - Flow regulator

Adjustable, priority type pressure compensated
38L/min (10 USgpm) • 350 bar (5000 psi)

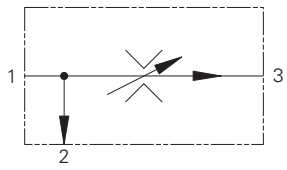

Sectional view

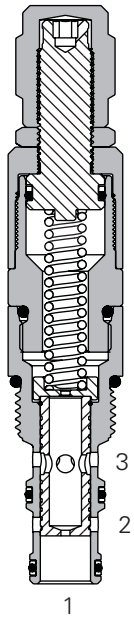

Description

These valves are limited range adjustable pressure compensated,priority type Flow regulators. The flow (and actuator speed) will be largely independent of the load and the pressure conditions.

If used to regulate flow from a fixed supply, for example a standard gear or piston pump, the valve will pass the required flow and any surplus flow will be diverted to the bypass port. The bypass flow may be used for a secondary circuit whether the secondary pressure requirement is higher or lower than the regulated pressure.

The valve inlet pressure will be approximately 7 bar (100 psi) more than the regulated or bypass pressure, whichever is higher.

*The flow adjustment is from the factory set maximum flow rate down to 50% of that factory set flow rate.

Operation

Inlet flow passes through the fixed orifice and the radial holes in the spool/sleeve assembly then out of the regulated port. The pressure drop across the orifice is sensed at each end of the spool, producing a force which, at the required flow rate, overcomes the spring force. The resultant movement of the spool regulates the flow by opening the radial valve ports to the bypass port and closing the regulated flow ports.

The valve will pass flow in the return direction but this is restricted by the flow path through the control orifice.

Features

Cartridge construction gives versatility of application. A valve may be fitted into a line body, a custom designed Hydraulic Integrated Circuit or directly into a cylinder or other actuator. Leakproof adjust screw gives easy, accurate adjustment to required flow setting. Hardened and ground working parts give accurate flow control and long working life.

Performance data

Ratings and Specifications

Performance data is typical with fluid at 21,8 cSt (105 SUS) and 49° C (120° F)	
Typical Application pressure (all ports)	350 bar (5000 psi)
Cartridge fatigue pressure (infinite life)	350 bar (5000 psi)
Rated flow	Maximum inlet flow 64 L/min (17 USgpm) Maximum regulated flow 38 L/min (10 USgpm)
Flow regulation accuracy	0,4-1,9 L/min (0.1-0.49 USgpm) ±20% 1,9-7,5 L/min (0.5-1.99 USgpm) ±15% 7,6-37,8 L/min (2.0-10.0 USgpm) ±10% Factory set maximum priority flow rate accuracy under standard test conditions and within the above ranges
Temperature range	-40° to 120°C (-40° to 248°F)
Cavity	C-10-3
Fluids	All general purpose hydraulic fluids such as: MIL-H-5606, SAE 10, SAE 20, etc.
Filtration	18/**16/13**
Standard housing materials	Steel
Weight cartridge only	0.25 kg (0.54 lb.)
Seal kit	565804 (Buna-N) 889599 (Viton®)

Viton is a registered trademark of E.I. DuPont

Typical flow regulation

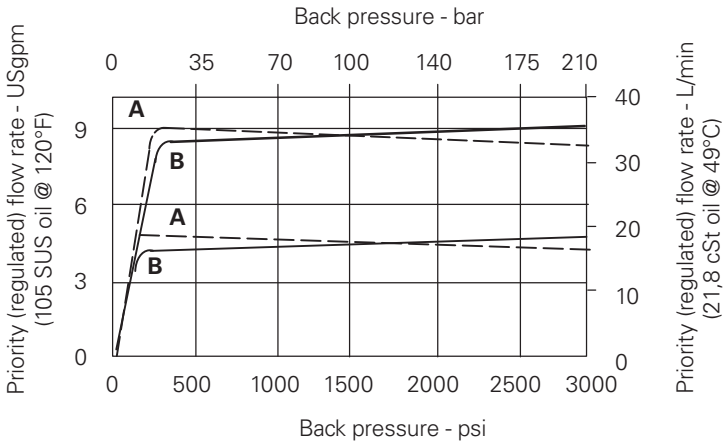

A - Port 3, priority (regulated outlet) pressurized.
B - Port 2, (bypass outlet) pressurized.

Where measurements are critical request certified drawings. We reserve the right to change specifications without notice.

PFR12-10 - Flow regulator

Adjustable, priority type pressure compensated
38L/min (10 USgpm) • 350 bar (5000 psi)

Model code

PFR12	10	(V)	*	**	*.*	00
1	2	3	4	5	6	7

1 Function

PFR12 - Priority flow regulator

2 Size

10 - 10 Size

3 Seals

Blank - Buna-N
V - Viton

4 Adjustment

C - Cap
K - Knob
S - Screw

5 Port size

Code	Port size	Housing number - body only	
		Aluminium fatigue rated	Steel
2G	1/4" BSPP	876705	
3G	3/8" BSPP	876714	
6H	SAE 6	876704	
8H	SAE 8	876711	
S2G	1/4" BSPP		02-175127
S3G	3/8" BSPP		02-175128
S6T	SAE 6		02-175124
S8T	SAE 8		02-175125

6 Factory set flow rate, nominal

(Specify in USgpm)
Range 0,38-37,8 L/min
(0.1-10.0 USgpm)

7 Special features

00 - None
(Only required if valve has special features, omitted if "00.")

Dimensions

mm (inch)

Note: Torque cartridge in aluminum housing to 47-54 Nm (35-40 ft. lbs)

Note: Torque cartridge in steel housing to 68-75 Nm (50-55 ft. lbs)

Cartridge only

Basic code
PFR12-10

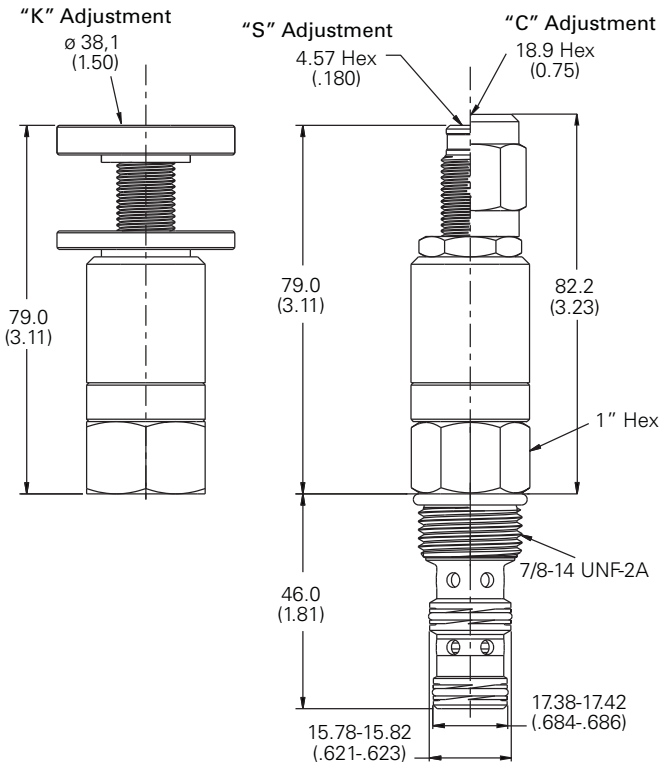

Installation drawing (Steel)

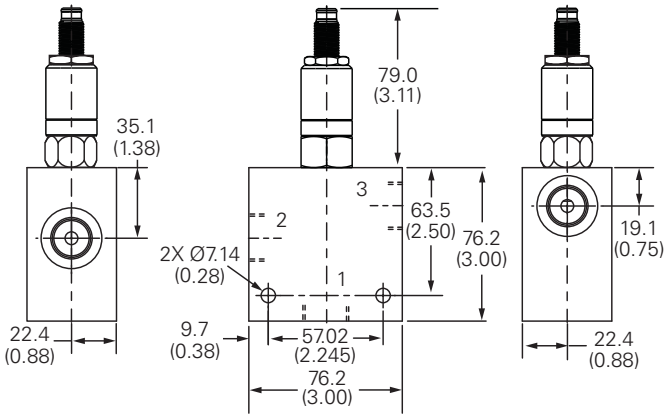

⚠ Warning

Aluminum housings can be used for pressures up to 210 bar (3000 psi) Steel housings must be used for operating pressures above 210 bar (3000 psi).

Where measurements are critical request certified drawings. We reserve the right to change specifications without notice.

PFR12-12 - Flow regulator

Adjustable, priority type, pressure compensated
45 L/min (12 USgpm) • 350 bar (5000 psi)

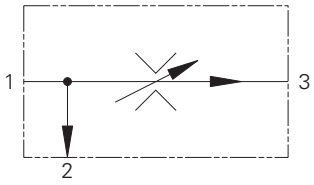

Sectional view

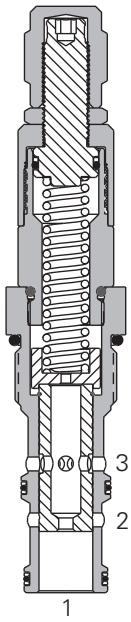

Description

These valves are priority flow regulators. The flow (and actuator speed) will be largely independent of the load and the pressure conditions.

If used to regulate flow from a fixed supply, for example a standard gear or piston pump, the valve will pass the required flow and any surplus flow will be diverted to the bypass port. The bypass flow may be used for a secondary circuit whether the secondary pressure requirement is higher or lower than the regulated pressure.

The valve inlet pressure will be approximately 7 bar (100 psi) more than the regulated or bypass pressure, whichever is higher.

Operation

Inlet flow passes through the fixed orifice and the radial holes in the spool/sleeve assembly then out of the regulated port. The pressure drop across the orifice is sensed at each end of the spool, producing a force which, at the required flow rate, overcomes the spring force. The resultant movement of the spool regulates the flow by opening the radial valve ports to the bypass port and closing the regulated flow ports.

The valve will pass flow in the return direction but this is restricted by the flow path through the control orifice.

Features

Cartridge construction gives versatility of application. A valve may be fitted into a line body, a custom designed Hydraulic Integrated Circuit or directly into a cylinder or other actuator. Leakproof adjust screw gives easy, accurate adjustment to required flow setting. Hardened and ground working parts give accurate flow control and long working life.

Performance data

Ratings and specifications

Performance data is typical with fluid at 21,8 cSt (105 SUS) and 49° C (120° F)	
Typical Application pressure (all ports)	350 bar (5000 psi)
Cartridge fatigue pressure (infinite life)	350 bar (5000 psi)
Rated flow	Maximum inlet flow 114 L/min (30 USgpm) Maximum regulated flow 45 L/min (12 USgpm)
Flow regulation accuracy	1,89 - 75,7 L/min (0.5 - 20.0 USgpm) ± 15% Factory set maximum priority flow rate accuracy under standard test conditions and within the above ranges
Temperature range	-40° to 120°C (-40° to 248°F)
Cavity	C-12-3
Fluids	All general purpose hydraulic fluids such as: MIL-H-5606, SAE 10, SAE 20, etc.
Filtration	18/**16/13**
Standard housing materials	Aluminum or Steel
Weight cartridge only	0,32 kg (0.70 lb.)
Seal kit	9900171 (Buna-N) 9900172 (Viton®)

Viton is a registered trademark of E.I. DuPont

Typical flow regulation

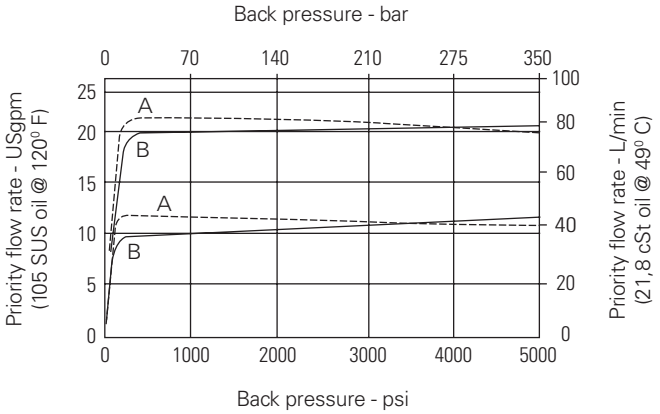

A - Port 3, priority (regulated outlet) pressurized.
B - Port 2, (bypass outlet) pressurized.

Where measurements are critical request certified drawings. We reserve the right to change specifications without notice.

PFR12-12 - Flow regulator

Adjustable, priority type, pressure compensated
45 L/min (12 USgpm) • 350 bar (5000 psi)

Model code

PFR12 – 12 (V) – * – ** – *.* – 00

1 2 3 4 5 6 7

1 Function

PFR12 - Priority flow regulator

2 Size

12 - 12 Size

3 Seals

Blank - Buna-N
V - Viton

4 Adjustment

C - Cap
K - Knob
S - Screw

5 Port size

0 - Cartridge only

Code	Port size	Housing number - body only	
		Aluminium fatigue rated	Steel
A4G	1/2" BSPP	02-161817	
A6G	3/4" BSPP	02-161816	
A10H	SAE 10	02-160642	
A12H	SAE 12	02-160646	
S4G	1/2" BSPP		02-169815
S6G	3/4" BSPP		02-169814
S10T	SAE 10		02-161070
S12T	SAE 12		02-169816

See section J for housing details.

6 Factory set flow rate, nominal

(Specify in USgpm)
Range 1,89 - 75,7 L/min
(0.5 - 20.0 USgpm)

7 Special features

00 - None
(Only required if valve has special features, omitted if "00.")

Dimensions

mm (inch)

Note: Torque cartridge in aluminum housing to 81-95 Nm (60-70 ft. lbs)

Note: Torque cartridge in steel housing to 102-115 Nm (75-85 ft. lbs)

Cartridge only
Basic code
PFR12-12

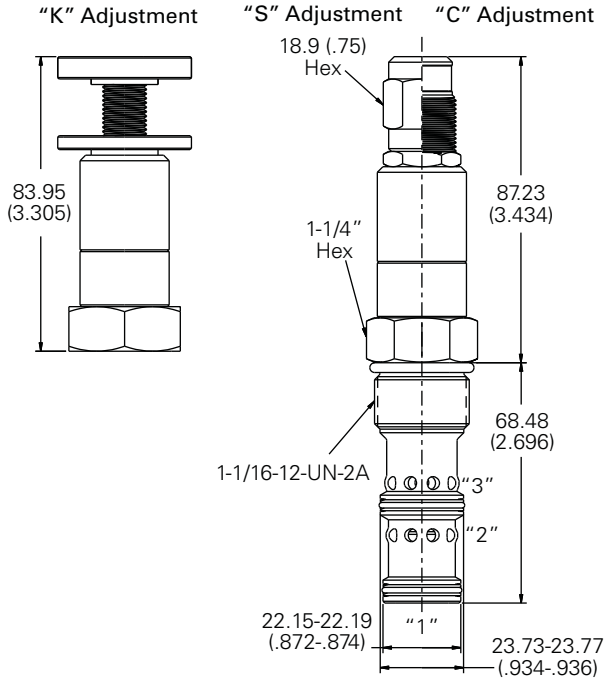

Installation drawing (Steel)

⚠ Warning

Aluminum housings can be used for pressures up to 210 bar (3000 psi) Steel housings must be used for operating pressures above 210 bar (3000 psi).

H

Where measurements are critical request certified drawings. We reserve the right to change specifications without notice.

PFR2-16 - Flow regulator

Limited range adjustable, priority pressure compensated
114 L/min (30 USgpm) • 210 Bar (3000 psi)

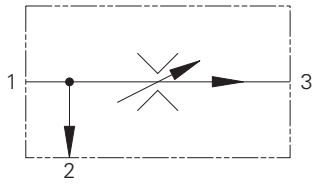

Sectional view

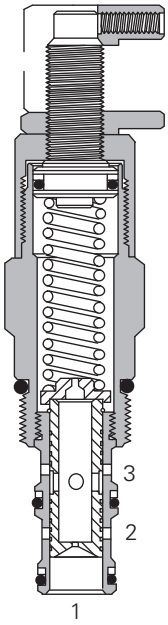

Operation

Inlet flow passes through the fixed orifice and the radial holes in the spool/sleeve assembly then out of the regulated port. The pressure drop across the orifice is sensed at each end of the spool, producing a force which, at the required flow rate, overcomes the spring force. The resultant movement of the spool regulates the flow by opening the radial valve ports to the bypass port and closing the regulated flow ports.

The valve will pass flow in the return direction but this is restricted by the flow path through the control orifice.

Features

Cartridge construction gives versatility of application. A valve may be fitted into a line body, a custom designed Hydraulic Integrated Circuit or directly into a cylinder or other actuator. Leakproof adjust screw gives easy, accurate adjustment to required flow setting. Hardened and ground working parts give accurate flow control and long working life.

Performance data

Ratings and specification

Performance data is typical with fluid at 21,8 cSt (105 SUS) and 49°C (120°F)	
Typical application pressure (all ports)	210 bar (3000 psi)
Cartridge fatigue pressure (infinite life)	210 bar (3000 psi)
Rated flow	Maximum inlet flow 151 L/min (40 USgpm) Maximum regulated flow 114 L/min (30 USgpm)
Temperature range	-40° to 120°C (-40° to 248°F))
Flow regulation accuracy Factory set maximum flow rate accuracy under standard test conditions and within the above ranges	1,9–10,9 L/min (0.5–2.9 USgpm) ±15% 11,4–114 L/min (3–30 USgpm) ±10%
Cavity	C–16–3
Fluids	All general purpose hydraulic fluids such as MIL-H-5606, SAE 10, SAE 20 etc.
Filtration	Cleanliness code 18/**16/13**
Standard housing material	Aluminum or Steel
Weight cartridge only	0,43 kg (0.95 lbs)
Seal kit	565811 (Buna-N) 889610 (Viton®)

Viton is a registered trademark of E.I. DuPont

Description

These valves are priority flow regulators. The flow (and actuator speed) will be largely independent of the load and the pressure conditions.

If used to regulate flow from a fixed supply, for example a standard gear or piston pump, the valve will pass the required flow and any surplus flow will be diverted to the bypass port. The bypass flow may be used for a secondary circuit whether the secondary pressure requirement is higher or lower than the regulated pressure.

The valve inlet pressure will be approximately 7 bar (100 psi) more than the regulated or bypass pressure, whichever is higher.

Typical flow regulation

Cartridge only

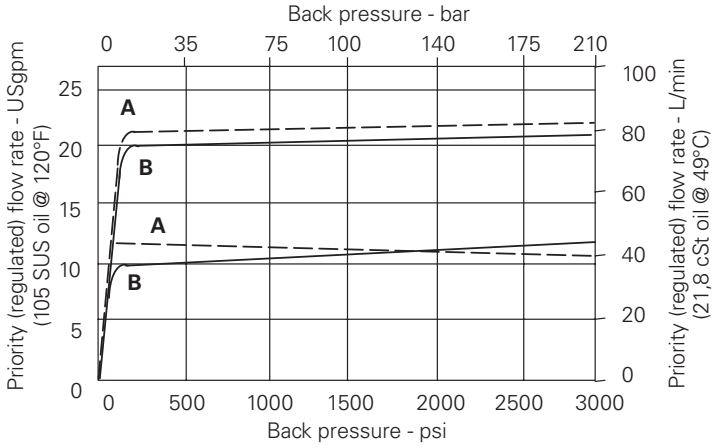

A - Port 3, priority (regulated) outlet pressurized
B - Port 2, bypass outlet pressurized

Notes: The flow adjustment is from the factory - set maximum flow rate down to 50% of that factory set flow rate.

Where measurements are critical request certified drawings. We reserve the right to change specifications without notice.

PFR2-16 - Flow regulator

Limited range adjustable, priority pressure compensated
114 L/min (30 USgpm) • 210 Bar (3000 psi)

Model code

PFR2 – 16 (V) – * – * – *.* – 00**

1 2 3 4 5 6 7

1 Function

PFR2 - Priority flow regulator

2 Size

16 - 16 size

3 Seals

Blank - Buna-N
V - Viton®

4 Adjustment

C - Cap
K - Knob
S - Screw

5 Port size

Code	Port size	Housing number	
		Aluminium light duty	Aluminum fatigue rated
0	Cartridge only	566152	–
12T	SAE 12	02-175465	–
6B	3/4" BSPP	–	876721
10H	SAE 10	–	876723
12H	SAE 12	–	876720
4G	1/2" BSPP	–	876722
6G	3/4" BSPP		

See section J for housing details.

6 Factory set flow rate

(Specify in USgpm)
Range 1,9–114 L/min
(0.5–30 USgpm)

7 Special features

00 – None
(Only required if valve has special features, omitted if "00")
SS - 316 stainless steel external components

Dimensions
mm (inch)

Torque cartridge in aluminum housing to 108–122 Nm (80–90 ft lbs).

Cartridge only
Basic code
PFR2-16

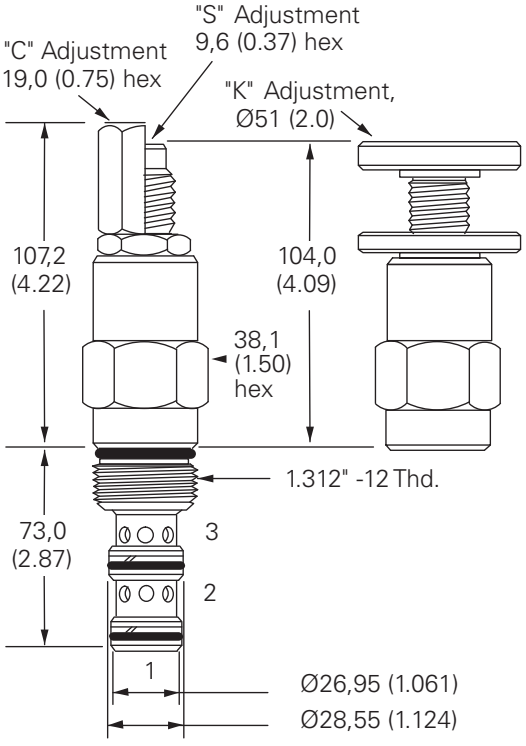

Installation drawing

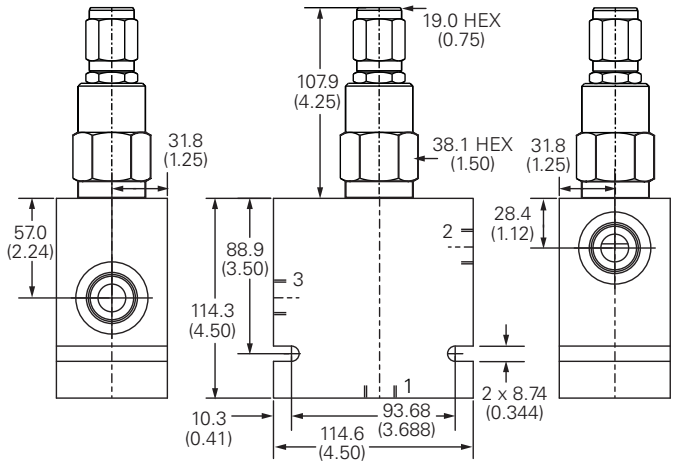

H

Where measurements are critical request certified drawings. We reserve the right to change specifications without notice.

PFR12-16 - Flow regulator

Adjustable, priority type, pressure compensated
114 L/min (30 USgpm) • 350 bar (5000 psi)

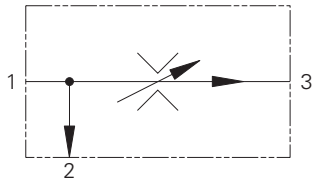

Operation

Inlet flow passes through the fixed orifice and the radial holes in the spool/sleeve assembly then out of the regulated port. The pressure drop across the orifice is sensed at each end of the spool, producing a force which, at the required flow rate, overcomes the spring force. The resultant movement of the spool regulates the flow by opening the radial valve ports to the bypass port and closing the regulated flow ports.

The valve will pass flow in the return direction but this is restricted by the flow path through the control orifice.

Features

Cartridge construction gives versatility of application. A valve may be fitted into a line body, a custom designed Hydraulic Integrated Circuit or directly into a cylinder or other actuator. Leakproof adjust screw gives easy, accurate adjustment to required flow setting. Hardened and ground working parts give accurate flow control and long working life.

Sectional view

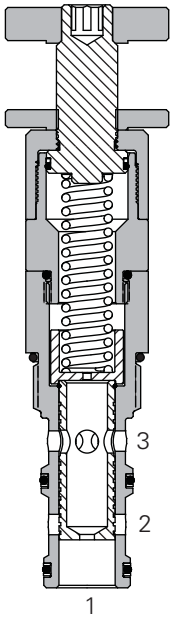

Performance data

Ratings and specifications

Performance data is typical with fluid at 21,8 cSt (105 SUS) and 49° C (120° F)	
Typical Application pressure (all ports)	350 bar (5000 psi)
Cartridge fatigue pressure (infinite life)	350 bar (5000 psi)
Rated flow	Maximum inlet flow 151 L/min (40 USgpm) Maximum regulated flow 114 L/min (30 USgpm)
Flow regulation accuracy	1,9-10,9 L/min (0.5-2.9 USgpm) ±15%* 11,4-114 L/min (3-30 USgpm) ±10%*
* Factory set maximum priority flow rate accuracy under standard test conditions and within the above ranges	
Temperature range	-40° to 120°C (-40° to 248°F)
Cavity	C-16-3
Fluids	All general purpose hydraulic fluids such as: MIL-H-5606, SAE 10, SAE 20, etc.
Filtration	18/**16/13**
Standard housing materials	Aluminum or Steel
Weight cartridge only	0,43 kg (0.95 lb.)
Seal kit	889632 (Buna-N) 889636 (Viton®)

Viton is a registered trademark of E.I. DuPont

Description

These valves are priority flow regulators. The flow (and actuator speed) will be largely independent of the load and the pressure conditions.

If used to regulate flow from a fixed supply, for example a standard gear or piston pump, the valve will pass the required flow and any surplus flow will be diverted to the bypass port. The bypass flow may be used for a secondary circuit whether the secondary pressure requirement is higher or lower than the regulated pressure.

The valve inlet pressure will be approximately 7 bar (100 psi) more than the regulated or bypass pressure, whichever is higher.

Typical flow regulation

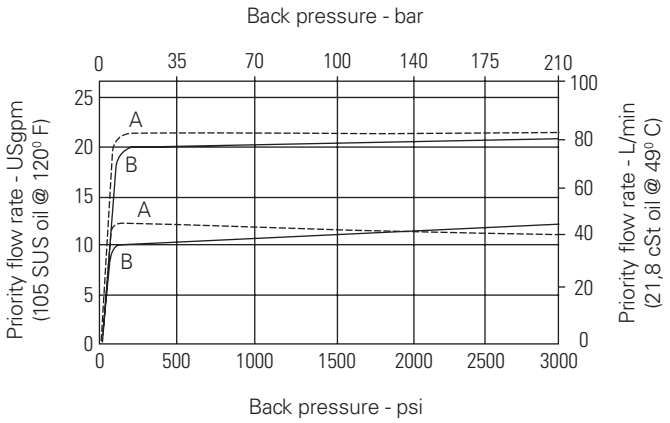

A - Port 3, priority (regulated outlet) pressurized.
B - Port 2, (bypass outlet) pressurized.

Where measurements are critical request certified drawings. We reserve the right to change specifications without notice.

PFR12-16 - Flow regulator

Adjustable, priority type, pressure compensated
114 L/min (30 USgpm) • 350 bar (5000 psi)

Model code

PFR12 – 16 (V) – * – ** – *.* – 00

1 2 3 4 5 6 7

1 Function

PFR12 - Priority flow regulator

2 Size

16 - 16 Size

3 Seals

Blank - Buna-N
V - Viton®

4 Adjustment means

C - Cap
K - Knob
S - Screw

5 Port size

Code	Port size	Housing number - body only	
		Aluminium fatigue rated	Steel
0	Cartridge only		
A10H	SAE 10	876721	
A12H	SAE 12	876723	
A4G	1/2" BSPP	876720	
A6G	3/4" BSPP	876722	
S4G	1/2" BSPP		02-175131
S6G	3/4" BSPP		02-175132
S10T	SAE 10		02-175129
S12T	SAE 12		02-175130

See section J for housing details.

6 Factory set flow rate, nominal

(Specify in USgpm)
Range 1,9-114 L/min
(0.5-30 USgpm)

7 Special features

00 - None
(Only required if valve has special features, omitted if "00.")

Dimensions

mm (inch)

Cartridge only
Basic code
PFR12-16

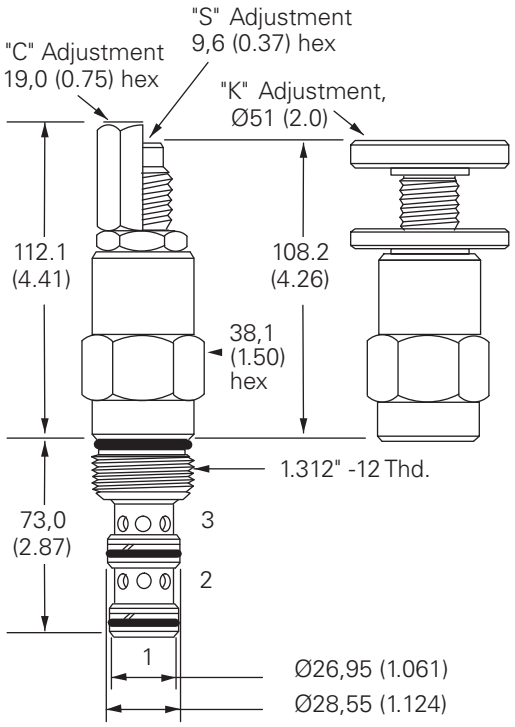

Installation drawing (Steel)

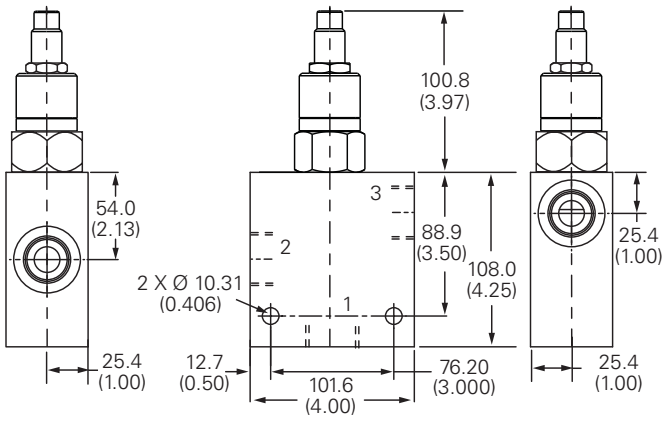

Note: Torque cartridge in aluminum housing to 108-122 Nm (80-90 ft. lbs)

Note: Torque cartridge in steel housing to 136-149.6 Nm (100-110 ft. lbs)

⚠ Warning

Aluminum housings can be used for pressures up to 210 bar (3000 psi) Steel housings must be used for operating pressures above 210 bar (3000 psi).

Where measurements are critical request certified drawings. We reserve the right to change specifications without notice.

PFRD/S-12 - Priority flow control

Spool type, load sensing
76 L/min (20 USgpm) • 280 Bar (4000 psi)

Dynamic signal (PFRD)

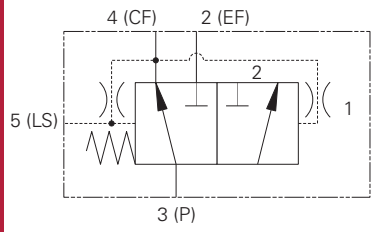

Static signal (PFRS)

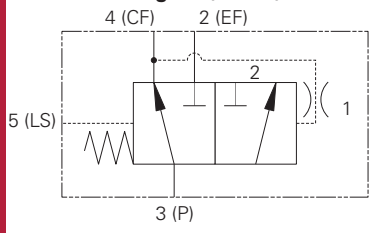

Operation

This valve is used in the flow control mode. Pump flow from the valve inlet port 3 is delivered first to port 4 at a fixed rate; excess flow is bypassed to port 2. The valve maintains the controlled flow to 4 regardless of inlet pressure change or load pressure changes at 2 or 4. This valve is typically used with open loop load sense systems in steering and braking circuits. The static type is used for less difficult applications where response or circuit stability is not a problem. The dynamic type is used for difficult applications where response or circuit stability are critical. The load sense line connected to port 5 should not exceed 2 Meters (6 Feet) in length. Overpressure protection for the circuits connected to ports 2 and 4 must be provided by external relief valves. The control pressure is determined by assuring adequate inlet pressure to the steering unit and must be matched to the steering unit's required flow. The control pressure must be supplied to the valve as a minimum inlet pressure. The pressure at port 4 can vary by 10% when the load at the excess flow port 2 varies from 0 to maximum pressure.

Features

Hardened and ground working parts to limit leakage and extend service life. Robust design with a 280 bar max pressure rating.

Sectional view

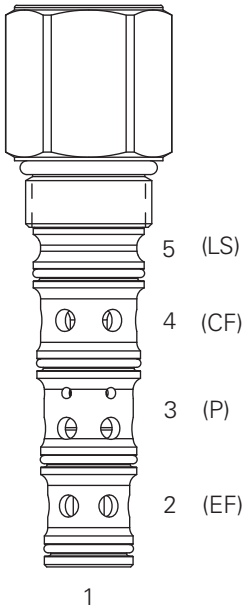

Note: Port 1 unused, port should be plugged.

Description

This is a load sense priority flow regulator designed to provide a controlled pressure compensated flow on demand. The valve is ideal for steering or accumulator charging circuits.

Performance data

Ratings and specifications

Performance data is typical with fluid at 21,8 cSt (105 SUS) and 49°C (120°F)	
Typical application pressure (all ports)	280 bar (4000 psi)
Cartridge fatigue pressure (infinite life)	280 bar (4000 psi)
Rated inlet flow	76 L/min (20 USgpm)
Temperature range	-40° to 120°C (-40° to 248°F))
Cavity	C–12–5S
Fluids	All general purpose hydraulic fluids such as: MIL-H-5606, SAE 10, SAE 20 etc.
Filtration	Cleanliness code 18/**16/13**
Standard housing material	Aluminum or steel
Weight cartridge only	0,36 kg (0.79 lb)
Seal kit	202914-921
Internal leakage	164cc/min (10 in 3/min) @ 3000 PSID
Recommended L/S orifice	0.031" (not included in valve)

Pressure drop

Cartridge only

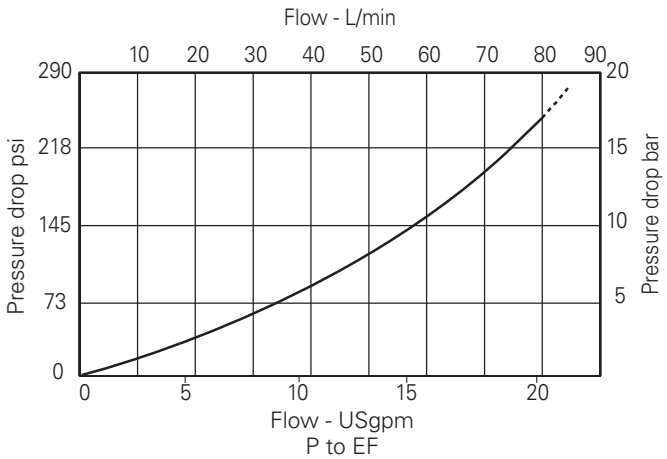

Notes: Minimum inlet flow should not be less than 1/4 of maximum inlet flow.

Minimum pressure drop is determined by control pressure.

Where measurements are critical request certified drawings. We reserve the right to change specifications without notice.

Model code

PFR* – **12** **U** – * – *** – *** – **00**

1 2 3 4 5 6 7

1 Function

PFRS - Priority flow regulator Static signal type
PFRD - Priority flow regulator Dynamic signal type

2 Size

12 - 12 size

3 Seal material

U - Urethane (standard)

4 Valve housing material

O - Cartridge only
A - Aluminum
S - Steel (standard)

5 Port size

Code	Port size		Housing number	
	Port 2, 3, 4	Port 5	Aluminium	Steel
000	No Body	–	–	–
10T	SAE 10	SAE 4	4998820-001	4998821-001
12T	SAE 12	SAE 4	4998820-002	4998821-002
04G	1/2" BSPP	1/4" BSPP	4998820-003	4998821-003
06G	3/4" BSPP	1/4" BSPP	4998820-004	4998821-004

*These model digits will not be stamped on the valve.

See section J for housing details.

6 Control pressure

PFRS options
055 - 55 psi (3.8 bar)
078 - 78 psi (5.4 bar)
100 - 100 psi (6.9 bar)
PFRD options
075 - 75 psi (5.2 bar)
110 - 110 psi (7.6 bar)
145 - 145 psi (10.0 bar)

7 Special features

00 - None
(Only required if valve has special features, omit if ("00")

Dimensions

mm (inch)

Torque cartridge in housing
A - 81-95 Nm (60-70 ft lbs)
S - 102-115 Nm (75-85 ft lbs)

Note: Standard housings include port 1, however for most applications this port must be blocked.

Cartridge only
Basic code
PFRD/S-12

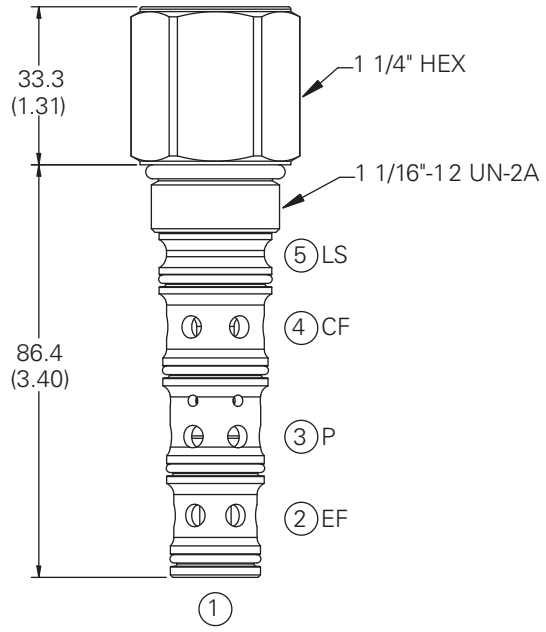

Installation drawing (Steel)

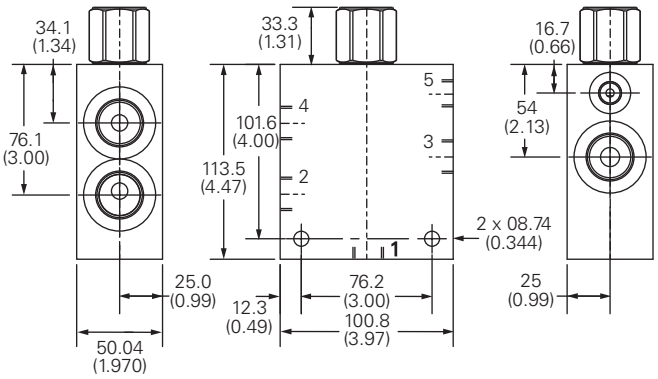

⚠ Warning

Aluminum housings can be used for pressures up to 210 bar (3000 psi). Steel housings **must** be used for operating pressures **above** 210 bar (3000 psi).

Where measurements are critical request certified drawings. We reserve the right to change specifications without notice.

PFRD/S-16 - Priority flow control

Spool type, load-sensing
150 L/min (40 USgpm) • 280 bar (4000 psi)

Dynamic signal (PFRD)

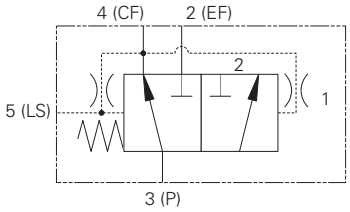

Static signal (PFRS)

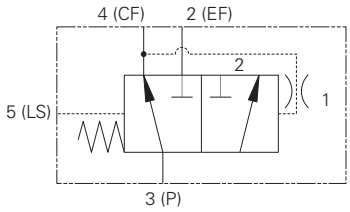

Operation

This valve is used in the flow control mode. Pump flow from the valve inlet port 3 is delivered first to port 4 at a fixed rate; excess flow is bypassed to port 2. The valve maintains the controlled flow to 4 regardless of inlet pressure change or load pressure changes at 2 or 4. This valve is typically used with open loop load sense systems in steering and braking circuits. The static type is used for less difficult applications where response or circuit stability is not a problem. The dynamic type is used for difficult applications where response or circuit stability are critical. The load sense line connected to port 5 should not exceed 2 Meters (6 Feet) in length. Overpressure protection for the circuits connected to ports 2 and 4 must be provided by external relief valves. The control pressure is determined by assuring adequate inlet pressure to the steering unit and must be matched to the steering unit's required flow. The control pressure must be supplied to the valve as a minimum inlet pressure. The pressure at port 4 can vary by 10% when the load at the excess flow port 2 varies from 0 to maximum pressure.

Features

Hardened and ground working parts to limit leakage and extend service life. Robust design with a 280 bar max pressure rating.

Sectional view

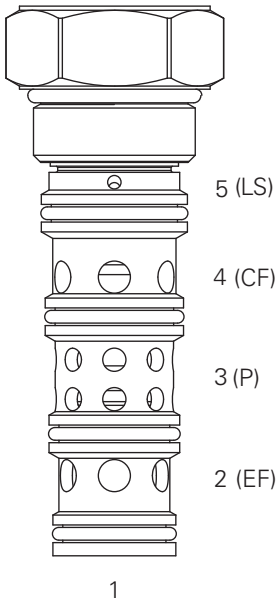

Note: Port 1 unused, port should be plugged.

Performance data

Ratings and specifications

Performance data is typical with fluid at 21,8 cSt (105 SUS) and 49°C (120°F)	
Typical application pressure (all ports)	280 bar (4000 psi)
Cartridge fatigue pressure (infinite life)	280 bar (4000 psi)
Rated inlet flow	150 L/min (40 USgpm)
Temperature range	-40° to 120°C (-40° to 248°F))
Cavity	C–16–5S
Fluids	All general purpose hydraulic fluids such as: MIL-H-5606, SAE 10, SAE 20 etc.
Filtration	Cleanliness code 18/**16/13**
Standard housing material	Aluminum or Steel
Weight cartridge only	0,47 kg (1.05 lbs)
Seal kit	202915-922
Internal leakage	164cc/min (10 in 3/min) @ 3000 PSID
Recommended L/S orifice	0.036" (not included in valve)

Pressure drop

Cartridge only

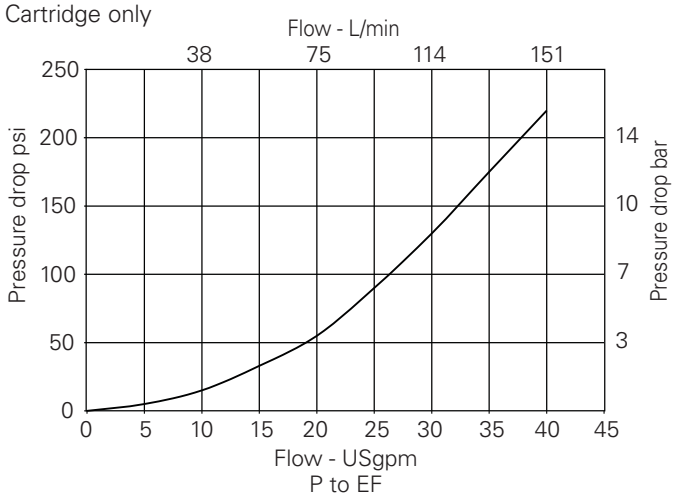

Notes: Minimum inlet flow should not be less than 1/4 of maximum inlet flow. Minimum pressure drop is determined by control pressure.

Description

This is a load sense priority flow regulator designed to provide a controlled pressure compensated flow on demand. The valve is ideal for steering or accumulator charging circuits.

Where measurements are critical request certified drawings. We reserve the right to change specifications without notice.

Model code

PFR* – **16** **U** – * – *** – *** – **00**

1 2 3 4 5 6 7

1 Function

PFRS - Priority flow regulator Static signal type
PFRD - Priority flow regulator Dynamic signal type

2 Size

16 - 16 size

3 Seal material

U - Urethane (standard)

4 Valve housing material

O - Cartridge only
A - Aluminum
S - Steel (standard)

5 Port size

Code	Port size		Housing number	
	Port 2, 3, 4	Port 5	Aluminium	Steel
000	No Body	–	–	–
12T	SAE 12	SAE 4	4994880-001	4994881-001
16T	SAE 16	SAE 4	4994880-002	4994881-002
06G	3/4" BSPP	1/4" BSPP	4994880-003	4994881-003
08G	1" BSPP	1/4" BSPP	4994880-004	4994881-004

*These model digits will not be stamped on the valve.
See section J for housing details.

6 Control pressure

PFRS options
065 - 65 psi (4.5 bar)
130 - 130 psi (8.9 bar)
160 - 160 psi (11.0 bar)
PFRD options
080 - 80 psi (5.5 bar)
110 - 110 psi (7.6 bar)
130 - 130 psi (9.0 bar)

7 Special features

00 - None
(Only required if valve has special features, omit if ("00")

Dimensions

mm (inch)

Torque cartridge in housing
A - 108-122 Nm (80-90 ft lbs)
B - 136-149 Nm (100-110 ft lbs)

Note: Standard housings include port 1, however for most applications this port must be blocked.

Cartridge only
Basic code
PFRD/S-16

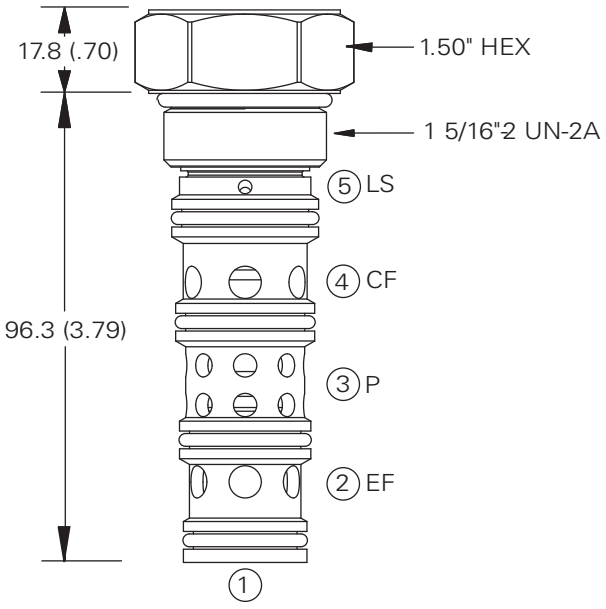

Installation drawing (Steel)

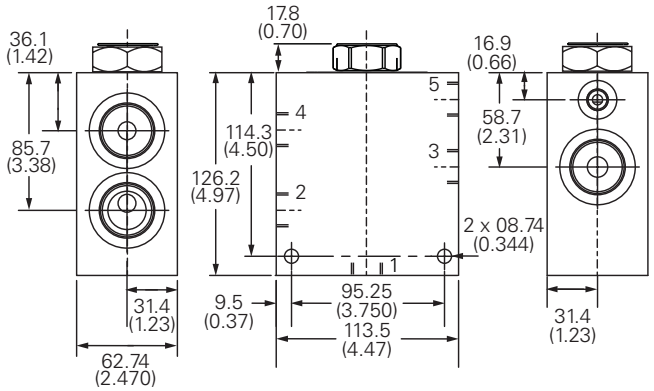

⚠ Warning

Aluminum housings can be used for pressures up to 210 bar (3000 psi). Steel housings **must** be used for operating pressures **above** 210 bar (3000 psi).

Where measurements are critical request certified drawings. We reserve the right to change specifications without notice.

PFRD/S-20 - Priority flow control

Spool type, load-sensing
230 L/min (60 USgpm) • 240 bar (3500 psi)

Dynamic signal (PFRD)

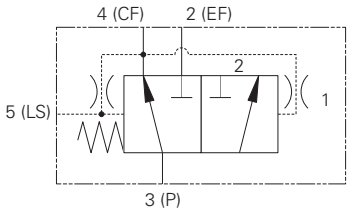

Static signal (PFRS)

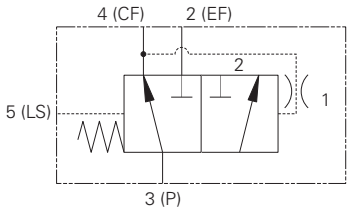

Operation

This valve is used in the flow control mode. Pump flow from the valve inlet port 3 is delivered first to port 4 at a fixed rate; excess flow is bypassed to port 2. The valve maintains the controlled flow to 4 regardless of inlet pressure change or load pressure changes at 2 or 4. This valve is typically used with open loop load sense systems in steering and braking circuits. The static type is used for less difficult applications where response or circuit stability is not a problem. The dynamic type is used for difficult applications where response or circuit stability are critical. The load sense line connected to port 5 should not exceed 2 Meters (6 Feet) in length. Overpressure protection for the circuits connected to ports 2 and 4 must be provided by external relief valves. The control pressure is determined by assuring adequate inlet pressure to the steering unit and must be matched to the steering unit's required flow. The control pressure must be supplied to the valve as a minimum inlet pressure. The pressure at port 4 can vary by 10% when the load at the excess flow port 2 varies from 0 to maximum pressure.

Features

Hardened and ground working parts to limit leakage and extend service life. Robust design with a 280 bar max pressure rating.

Sectional view

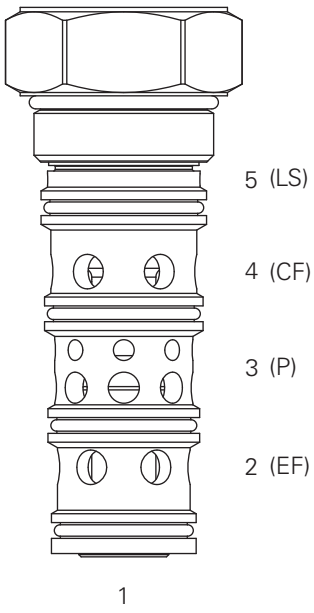

Note: Port 1 unused, port should be plugged.

Description

This is a load sense priority flow regulator designed to provide a controlled pressure compensated flow on demand. The valve is ideal for steering or accumulator charging circuits.

Performance data

Ratings and specifications

Performance data is typical with fluid at 21,8 cSt (105 SUS) and 49°C (120°F)	
Typical application pressure (all ports)	240 bar (3500 psi)
Cartridge fatigue pressure (infinite life)	240 bar (3500 psi)
Rated inlet flow	230 L/min (60 USgpm)
Temperature range	-40° to 120°C (-40° to 248°F))
Cavity	C–20–5S
Fluids	All general purpose hydraulic fluids such as: MIL-H-5606, SAE 10, SAE 20 etc.
Filtration	Cleanliness code 18/**16/13**
Standard housing material	Aluminum or Steel
Weight cartridge only	0,86 kg (1.9 lbs)
Seal kit	02-187543
Internal leakage	164cc/min (10 in 3/min) @ 3000 PSID
Recommended L/S orifice	0.047" (not included in valve)

Pressure drop

Cartridge only

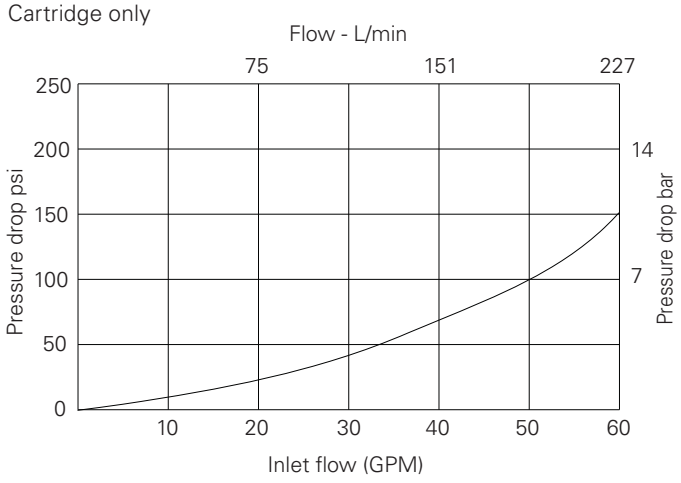

Notes: Minimum inlet flow should not be less than 1/4 of maximum inlet flow.
Minimum pressure drop is determined by control pressure.

Where measurements are critical request certified drawings. We reserve the right to change specifications without notice.

Model code

PFR* – **20** **U** – * – *** – *** – **00**

1 2 3 4 5 6 7

1 Function

PFRS - Priority flow regulator Static signal type
PFRD - Priority flow regulator Dynamic signal type

2 Size

20 - 20 size

3 Seal material

U - Urethane (standard)

4 Valve housing material

O - Cartridge only
A - Aluminum
S - Steel (standard)

5 Port size

Code	Port size		Housing number	
	Port 2, 3, 4	Port 5	Aluminium	Steel
000	No Body	–	–	–
12T	SAE 12	SAE 4	4998822-001	4998823-001
16T	SAE 16	SAE 4	4998822-002	4998823-002
06G	3/4" BSPP	1/4" BSPP	4998822-003	4998823-003
08G	1" BSPP	1/4" BSPP	4998822-004	4998823-004

*These model digits will not be stamped on the valve.

See section J for housing details.

6 Control pressure

PFRS options
080 - 80 psi (5.5 bar)
100 - 100 psi (6.9 bar)
PFRD options
085 - 85 psi (5.9 bar)
110 - 110 psi (7.6 bar)

7 Special features

00 - None
(Only required if valve has special features, omit if ("00")

Dimensions

mm (inch)

Torque cartridge in housing
A - 130-155 Nm (95-115 ft lbs)
B - 160-180 Nm (120-135 ft lbs)

Note: Standard housings include port 1, however for most applications this port must be blocked.

Cartridge only

Basic code
PFRD/S-20

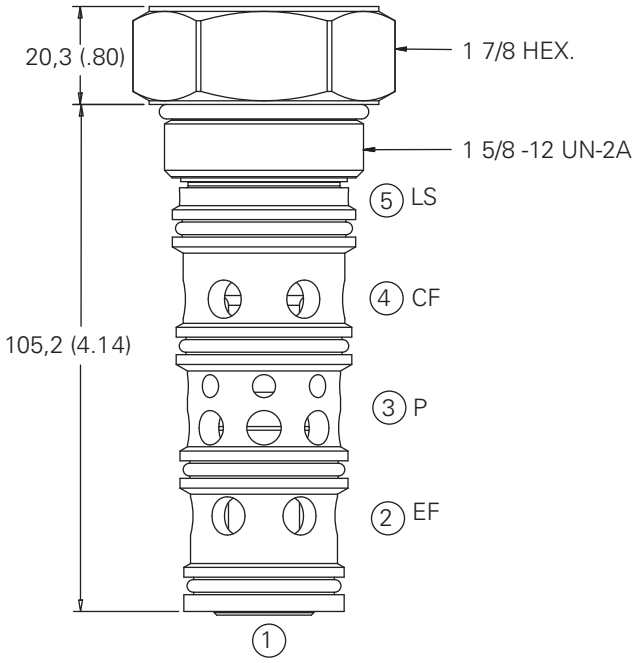

Installation drawing (Steel)

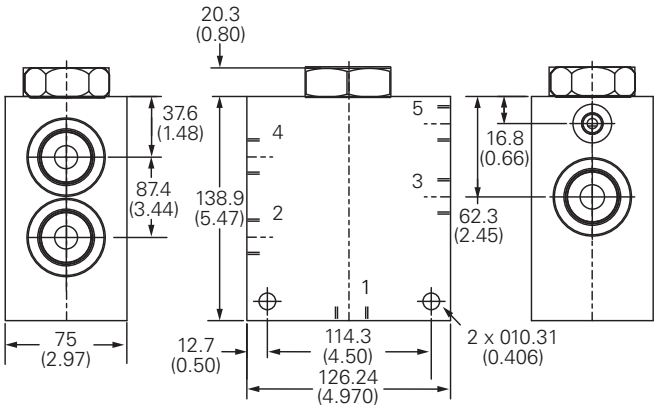

⚠ Warning

Aluminum housings can be used for pressures up to 210 bar (3000 psi). Steel housings **must** be used for operating pressures **above** 210 bar (3000 psi).

Where measurements are critical request certified drawings. We reserve the right to change specifications without notice.

MRV2-10 - Flow restrictor valve

Semi-rotary
Up to 57 L/min (15 USgpm) • 210 Bar (3000 psi)

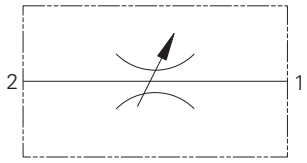

Operation

This valve will increase or decrease flow by changing the variable orifice with the rotary adjustment. Recommended flow path is 2 to 1.

Features

Hardened and ground working components. Cartridge construction for maximum mounting flexibility. Flexible mounting for the handle position, detent available.

Sectional view

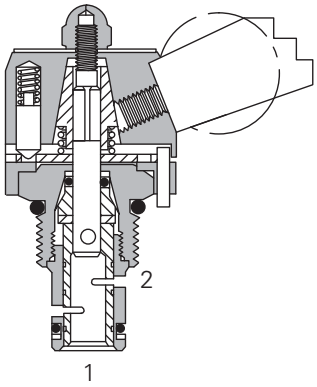

Performance data

Ratings and specifications

Performance data is typical with fluid at 21,8 cSt (105 SUS) and 49°C (120°F)	
Typical application pressure (all ports)	210 bar (3000 psi)
Rated inlet flow	**05** – 0-18,9 L/min (0–5 USgpm) **10** – 0-37,8 L/min (0–10 USgpm) **15** – 0-56,7 L/min (0–15 USgpm)
Internal leakage	164 cm^3/min (10 in^3/min) maximum 210 bar (3000 psi)
Temperature range	-40° to 120°C (-40° to 248°F)
Manual operators * Light duty housing only	**B** – Ball lever (friction lock)* **E** – Ball lever (10 position detent)* **D** – Lever (10 position detent)* **L** – Lever (friction lock)* **K** - Knob (non-locking)
Cavity	C–10–2
Fluids	All general purpose hydraulic fluids such as: -H-5606, SAE 10, SAE 20 etc.
Filtration	Cleanliness code 18/**16/13**
Standard housing material	Aluminum
Weight cartridge only	0,79 kg (1.74 lbs)
Seal kit	561810 (Buna-N), 889609 (Viton®)

Viton is a registered trademark of E.I. DuPont

Description

This is a 2 way 2 position manually operated semi rotary restrictor screw in cartridge valve. This can be used in conjunction with a compensator to give an increase in flow in proportion to the movement of the lever.

Pressure drop

Cartridge only
@ 5,5 bar (80 psi) pressure drop

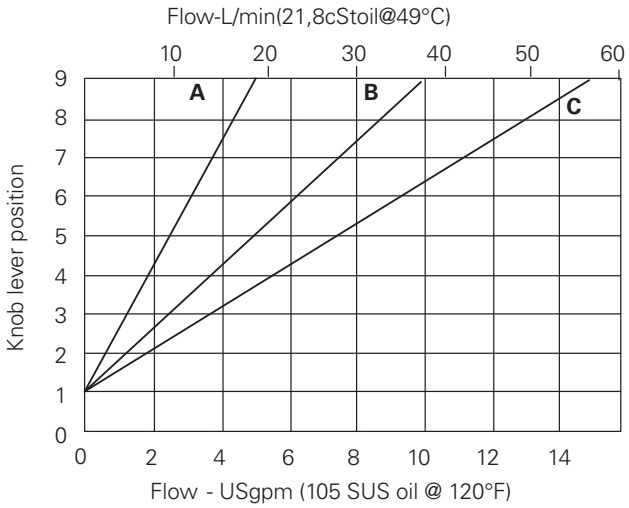

Rated flow (See model code position 6)
A - 05
B - 10
C - 15

Where measurements are critical request certified drawings. We reserve the right to change specifications without notice.

MRV2-10 - Flow restrictor valve

Semi-rotary
Up to 57 L/min (15 USgpm) • 210 Bar (3000 psi)

Model code

MRV2 – 10 (V) – * – ** – ** – 00

1 2 3 4 5 6 7

1 Function

MRV2 - Manual rotary valve

2 Size

10 - 10 size

3 Seal material

Blank - Buna-N
V - Viton®

4 Adjustment

O - Cartridge only
B - Ball lever (friction lock)*
E - Ball lever (10 position detent)*
D - Lever (10 position detent)*
L - Lever (friction lock)*
K - Knob (non-locking)
*Light duty housings only

5 Port size

Code	Port size	Housing number	
		Aluminium light duty	Aluminium fatigue rated
0	Cartridge only		
3B	3/8" BSPP	02-175462	–
6T	SAE 6	566151	–
2G	1/4" BSPP	–	876702
3G	3/8" BSPP	–	876703
6H	SAE 6	–	876700
8H	SAE 8	–	876701

See section J for housing details.

6 Max flow ranges

05 - 0-18,9 L/min (0-5 USgpm)
10 - 0-37,8 L/min (0-10 USgpm)
15 - 0-56,7 L/min (0-15 USgpm)

7 Special features

00 - None
(Only required if valve has special features, omit if ("00")
SS - 316 Stainless Steel external components

Dimensions

mm (inch)

Cartridge only
Basic code
MVR2-10

Torque cartridge in aluminum housing 47-54 Nm (35-50 ft lbs)

MRV2-10-K Knob Operated
Arrow can be re-located by slacking the plate. Re-tighten nut.

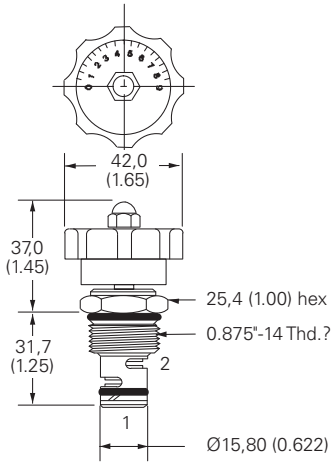

MRV2-10-B/E Models

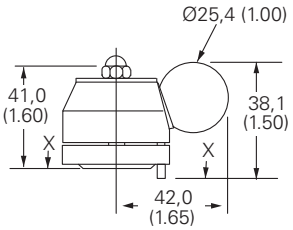

MRV2-10-D/L Models

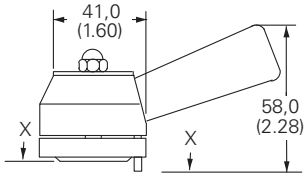

MRV2-10-E/D Models

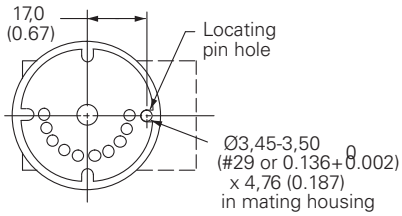

MRV2-10-B/L Models

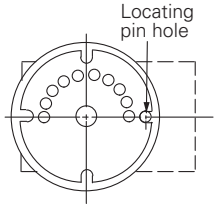

Installation drawing

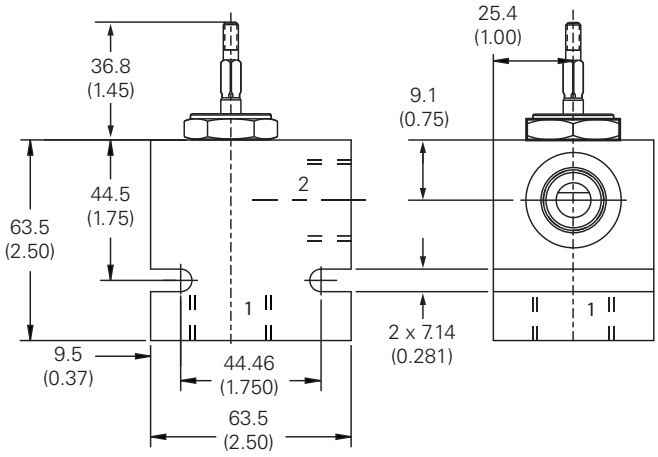

⚠ Warning

Aluminum housings can be used for pressures up to 210 bar (3000 psi). Steel housings **must** be used for operating pressures **above** 210 bar (3000 psi).

H

Where measurements are critical request certified drawings. We reserve the right to change specifications without notice.

MRV2-16 - Flow restrictor valve

Semi-rotary
Up to 170 L/min (45 USgpm) • 210 bar (3000 psi)

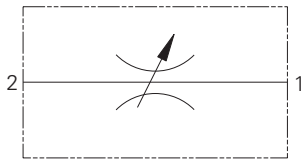

Operation

This valve will increase or decrease flow by changing the variable orifice with the rotary adjustment. Recommended flow path is 2 to 1.

Features

Hardened and ground working components. Cartridge construction for maximum mounting flexibility. Flexible mounting for the handle position, detent available.

Sectional view

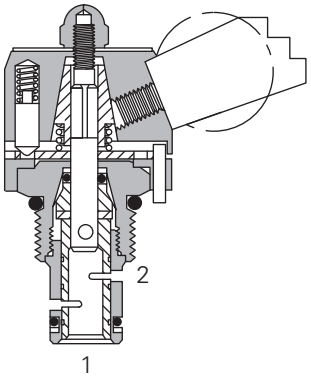

Performance data

Ratings and specifications

Performance data is typical with fluid at 21,8 cSt (105 SUS) and 49°C (120°F)		
Typical application pressure (all ports)		210 bar (3000 psi)
Rated inlet flow	**10** – 0-37,8 L/min **15** – 0-56,7 L/min **20** – 0-75,7 L/min **25** – 0-94,6 L/min **30** – 0-113,5 L/min **35** – 0-132,4 L/min **40** – 0-151,4 L/min **45** – 0-170,3 L/min	(0–10 USgpm) (0–15 USgpm) (0–20 USgpm) (0–25 USgpm) (0–30 USgpm) (0–35 USgpm) (0–40 USgpm) (0–45 USgpm)
Internal leakage		82 cm^3/min (5 in^3/min maximum 210 bar (3000 psi)
Temperature range		-40° to 120°C (-40° to 248°F)
Manual Operators *Light duty housing only.	**D** – **L** – **K** –	Lever (10 position detent)* Lever (friction lock)* Knob (non-locking)
Cavity		C–16–2
Fluids		All general purpose hydraulic fluids such as: MIL-H-5606, SAE 10, SAE 20 etc.
Filtration		Cleanliness code 18/**16/13**
Standard housing material		Aluminum
Weight cartridge only		0,79 kg (1.74 lbs)
Seal kit		565810 (Buna-N), 889609 (Viton®)

Viton is a registered trademark of E.I. DuPont

Description

This is a 2 way 2 position manually operated semi rotary restrictor screw in cartridge valve. This can be used in conjunction with a compensator to give an increase in flow in proportion to the movement of the lever.

Pressure drop curves

Cartridge only
@ 5,5 bar (80 psi) pressure drop

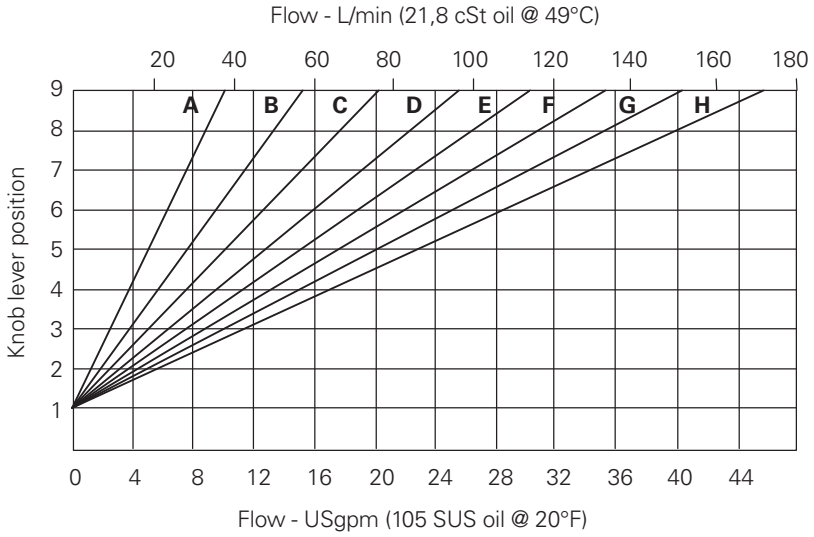

Rated flow (See model code position 6)

A - 10	**C** - 20	**E** - 30	**G** - 40
B - 15	**D** - 25	**F** - 35	**H** - 45

Where measurements are critical request certified drawings. We reserve the right to change specifications without notice.

MRV2-16 - Flow restrictor valve

Semi-rotary
Up to 170 L/min (45 USgpm) • 210 bar (3000 psi)

Model code

MRV2 – 16 (V) – * – ** – ** – 00

1 2 3 4 5 6 7

1 Function

MRV2 - Manual rotary valve

2 Size

16 - 16 size

3 Seal material

Blank - Buna-N
V - Viton®

4 Adjustment

O - Cartridge only
D - Lever (10 position detent)*
L - Lever (friction lock)*
K - Knob (non-locking)
*Light duty housings only.

5 Port size

Code	Port size	Housing number	
		Aluminium light duty	Aluminium fatigue rated
0	Cartridge only	02-175463	–
6B	3/4" BSPP	566149	–
12T	SAE 12	–	876716
4G	1/2" BSPP	–	876718
6G	3/4" BSPP	–	876717
10H	SAE 10	–	566113
12H	SAE 12	–	

See section J for housing details.

6 Max flow ranges

10 - 0-37,8 L/min (0-10 USgpm)
15 - 0-56,7 L/min (0-15 USgpm)
20 - 0-75,7 L/min (0-20 USgpm)
25 - 0-94,6 L/min (0-25 USgpm)
30 - 0-113,5 L/min (0-30 USgpm)
35 - 0-132,4 L/min (0-35 USgpm)
40 - 0-151,4 L/min (0-40 USgpm)
45 - 0-170,3 L/min (0-45 USgpm)

7 Special features

00 - None
(Only required if valve has special features, omit if ("00")

Dimensions

mm (inch)

Torque cartridge in aluminum housing 108-122 Nm (80-90 ft lbs)

Cartridge only

Basic code
MRV2-16

MRV2-16-K Knob Operated

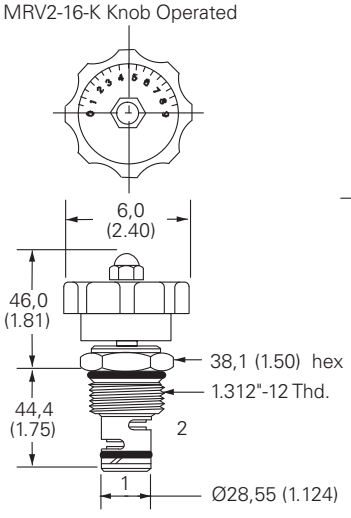

MRV2-16-D/L Models

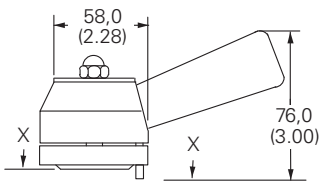

MRV2-16-D Models

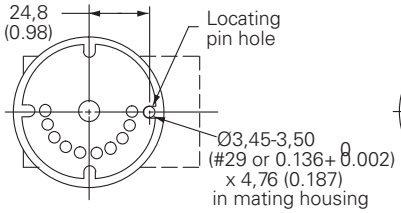

MRV2-16-L Models

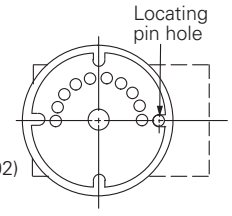

Installation drawing

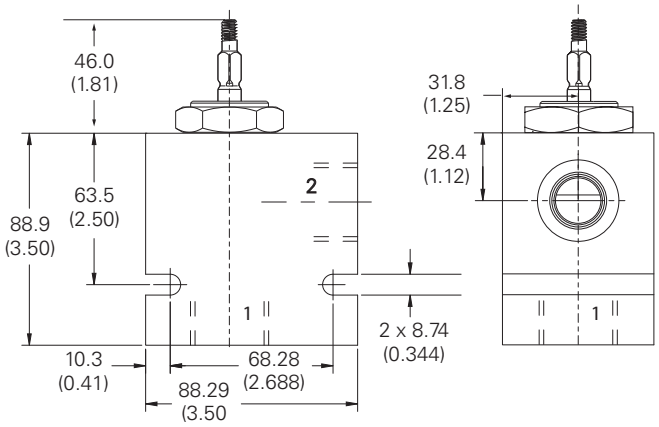

⚠ Warning

Aluminum housings can be used for pressures up to 210 bar (3000 psi). Steel housings **must** be used for operating pressures **above** 210 bar (3000 psi).

Where measurements are critical request certified drawings. We reserve the right to change specifications without notice.

2CR80 - Flow restrictor valve

Needle with free reverse flow check
80 L/min (20 USgpm) • 350 bar (5000 psi)

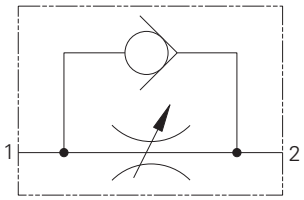

Operation

Rotation of the adjustment screw varies the valve opening to give a flow path approximately proportional to the turns of the screw. The check valve allows free flow in one direction.

Features

All steel construction with hardened and ground adjustment needle. Cartridge construction for versatility in applications. Sealed adjuster for leak-free adjustment.

Sectional view

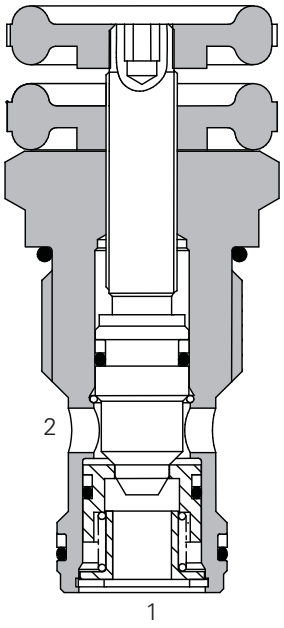

Performance data

Ratings and specifications

Performance data is typical with fluid at 40 cSt and 40°C	
Maximum pressure	350 bar (5000 psi)
Rated inlet flow	80 L/min (20 USgpm)
Temperature range	-30° to 120°C (-22° to 248°F)
Cavity	A7447 (See Section M)
Mounting position	Unrestricted
Torque cartridge into cavity	75 Nm (55 lbs ft)
Fluids	All general purpose hydraulic fluids such as: MIL-H-5606, SAE 10, SAE 20 etc.
Filtration	BS5540/4 Class 18/**16/13** (25 micron nominal)
Nominal viscosity	32 cSt
Standard housing material	Standard aluminum (up to 210 bar), add suffix "377" for steel option
Cartridge material	Working parts hardened and ground steel. Zinc plated body
Weight cartridge only	0,2 kg (0.4 lbs)
Seal kit	SK578 (Nitrile), SK578V (Viton®)

Viton is a registered trademark of E.I. DuPont

Description

The cartridge restrictor valve range can be set and locked to restrict flow in one direction. A typical use is the speed control of cylinder or other actuators. The free flow check allows for meter-in or meter-out actuator control.

Pressure drop

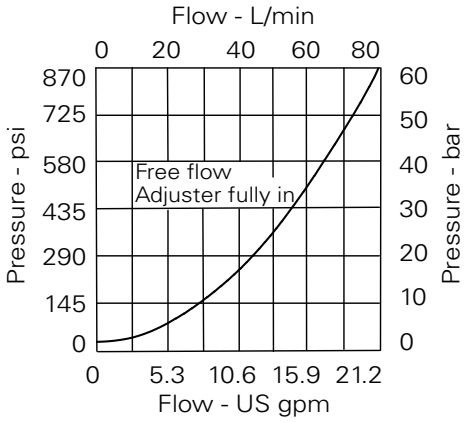

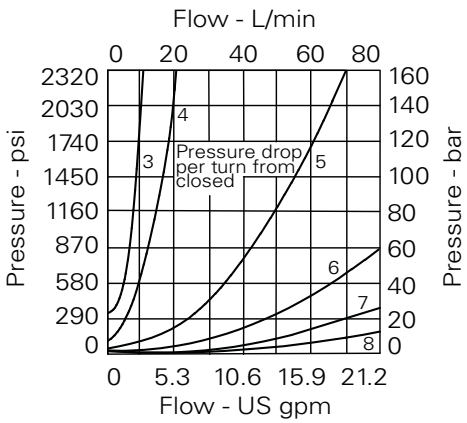

Where measurements are critical request certified drawings. We reserve the right to change specifications without notice.

2CR80 - Flow restrictor valve

Needle with free reverse flow check
80 L/min (20 USgpm) • 350 bar (5000 psi)

Model code

2CR8* – P 4W – S

1 2 3 4

1 Function

2CR80 - Cartridge only
2CR85 - Cartridge and body

2 Adjustment

P - Leakproof screw
R - Handknob
See page H-6 for dimensions.

3 Port size

Code	Port size	Housing number	
		Aluminium	Steel
0	Cartridge only		
4W	1/2" BSPP	B7418	B13663
8T	1/2" SAE	B10712	B11565

4 Seals

S - Nitrile (for use with most industrial hydraulic oils)
SV - Viton® (for high temperature & most special fluid applications)

Dimensions

mm (inch)

Cartridge only

Basic code 2CR80

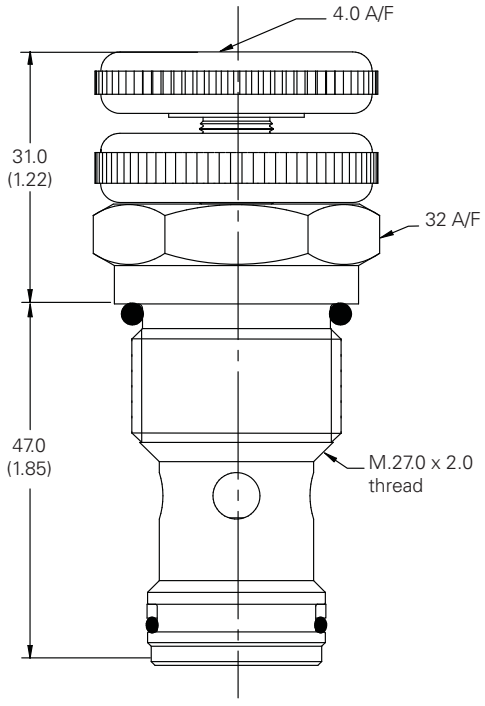

Complete valve

Basic code 2CR85

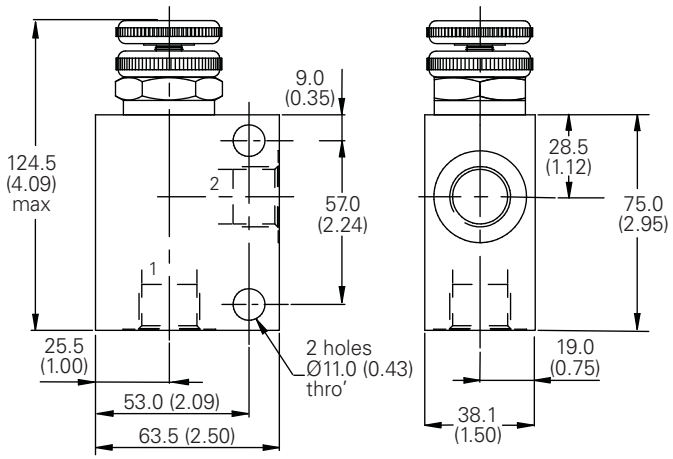

H

Where measurements are critical request certified drawings. We reserve the right to change specifications without notice.

NV1-8 - Flow restrictor valve

Needle
45 L/min (12 USgpm) • 210 Bar (3000 psi)

Dynamic signal (PFRD)

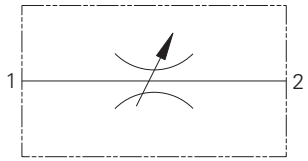

Operation

This needle valve is a variable orifice used to create a pressure drop when flow passes from port 1 to port 2 or port 2 to 1. Clockwise rotation of the adjust screw decreases the orifice size to completely closed and anti-clockwise increases the orifice. The setting can be locked using the lock nut on the adjust screw.

Features

Hardened and ground working components. Cartridge construction for maximum mounting flexibility.

Sectional view

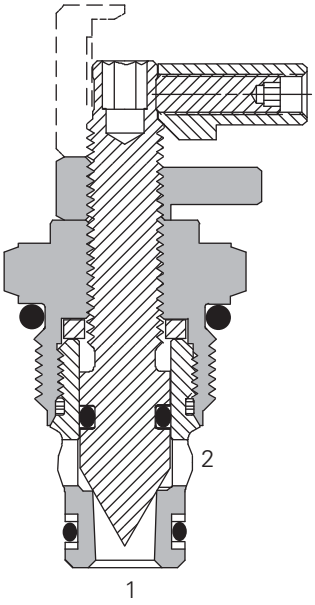

Performance data

Ratings and specifications

Performance data is typical with fluid at 21,8 cSt (105 SUS) and 49°C (120°F)	
Typical application pressure (all ports)	350 bar (5000 psi) steel housing 210 bar (3000 psi) aluminum housing
Cartridge fatigue pressure (infinite life)	280 bar (4000 psi)
Rated flow	45 L/min (12 USgpm)
Internal leakage	5 drops/min. maximum @ 350 bar (5000 psi)
Temperature range	-40° to 120°C (-40° to 248°F)
Cavity	C–8–2
Fluids	All general purpose hydraulic fluids such as: MIL–H–5606, SAE 10, SAE 20, etc.
Filtration	Cleanliness code 18/**16/13**
Standard housing materials	Aluminum or steel
Weight cartridge only	0,07 kg. (0.15 lbs.)
Seal Kits	02-165875 Buna–N 02-165877 Viton®

Viton is a registered trademark of E.I. DuPont

Description

This is a manually adjusted cartridge type needle valve. With fine control it is ideal for none compensated speed control of actuators or as a control orifice in conjuntion with a pressure compensator. Total shut off can be achieved allowing the valve to be used as a shut off valve.

Pressure drop

Cartridge only

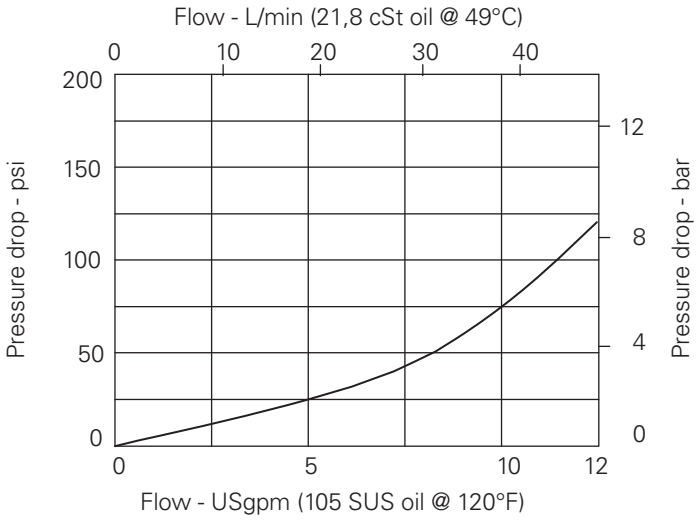

Fully open port 1 to port 2 or port 2 to port 1

Where measurements are critical request certified drawings. We reserve the right to change specifications without notice.

NV1-8 - Flow restrictor valve

Needle
45 L/min (12 USgpm) • 210 Bar (3000 psi)

Model code

NV1 – 8 – (V) – * – (*) – ** – 00

1 2 3 4 5 6 7

1 Function
NV1 - Needle valve

2 Size
8 - 8 size

3 Seal material
Blank - Buna-N
V - Viton®

4 Style
S - Screw
C - Cap
K - Knob

5 Valve housing material
Omit - Cartridge only
S - Steel
A - Aluminum

6 Port size

Code	Port size	Housing number	
		Aluminium fatigue duty	Aluminium fatigue rated
0	Cartridge only		
4T	SAE 4	02–160730	02-160736
6T	SAE 6	02–160731	02-160737
8T	SAE 8	02–160732	02-160738
2G	1/4" BSPP	02–160727	02-160733
3G	3/8" BSPP	02–160728	02-160734

See section J for housing details.

7 Special features
00 - None
(Only required if valve has special features, omit if ("00")

Dimensions
mm (inch)

Cartridge only
Basic code
NV1-8

Torque cartridge in
aluminum or steel housing
34-41 Nm (25-30 ft lbs)

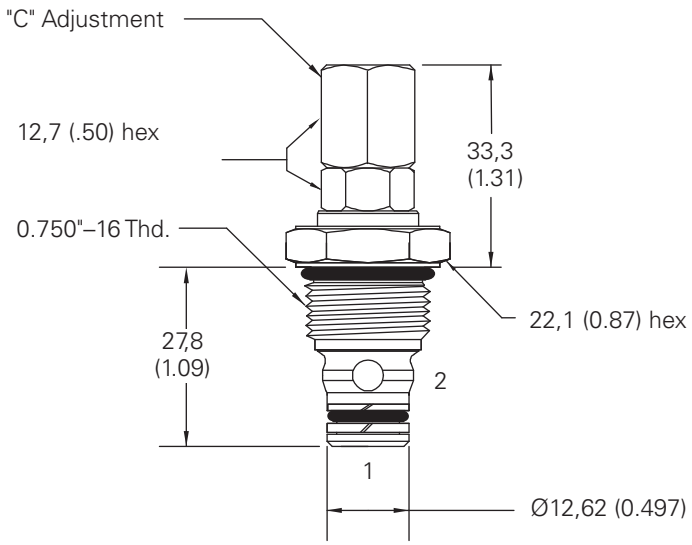

⚠ Warning
Aluminum housings can be used for pressures up to 210 bar (3000 psi). Steel housings **must** be used for operating pressures **above** 210 bar (3000 psi).

H

Where measurements are critical request certified drawings. We reserve the right to change specifications without notice.

NV1-10 - Flow restrictor valve

Needle
45 L/min (12 USgpm) • 210 bar (3000 psi)

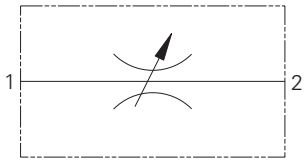

Operation

This needle valve is a variable orifice used to create a pressure drop when flow passes from port 1 to 2 or port 2 to 1. Clockwise rotation of the adjust screw de-creases the orifice size to completely closed and anti-clockwise increases the orifice. The setting can be locked using the lock nut on the adjust screw

Features

Hardened and ground working components. Cartridge construction for maximum mounting flexibility.

Sectional view

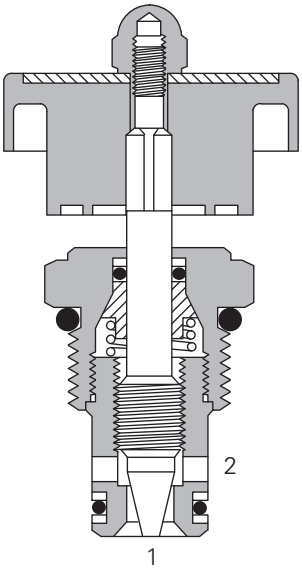

Performance data

Ratings and specifications

Performance data is typical with fluid at 21,8 cSt (105 SUS) and 49°C (120°F)	
Typical application pressure (all ports)	210 bar (3000 psi)
Cartridge fatigue pressure (infinite life)	210 bar (3000 psi)
Rated flow	45 L/min (12 USgpm)
Internal leakage	5 drops/min maximum @ 210 bar (3000 psi)
Temperature range	-40° to 120°C (-40° to 248°F)
Cavity	C–10–2
Fluids	All general purpose hydraulic fluids such as: MIL-H-5606, SAE 10, SAE 20 etc.
Filtration	Cleanliness code 18/**16/13**
Standard housing material	Aluminum
Weight cartridge only	0,11 kg. (0.24 lbs)
Seal kit	565806 (Buna-N) 889627 (Viton®)

Viton is a registered trademark of E.I. DuPont

Description

This is a manually adjusted cartridge type needle valve. With fine control it is ideal for none compensated speed control of actuators or as a control orifice in conjunction with a pressure compensator Total shut off can be achieved allowing the valve to be used as a shut of valve.

Pressure drop

Cartridge only

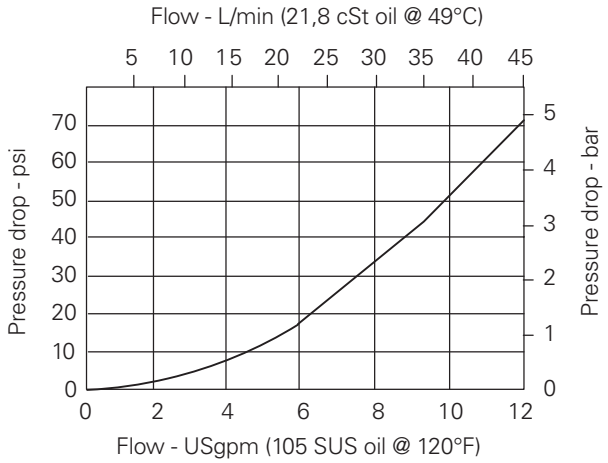

Fully open port 1 to port 2 or port 2 to port 1

Where measurements are critical request certified drawings. We reserve the right to change specifications without notice.

NV1-10 - Flow restrictor valve

Needle
45 L/min (12 USgpm) • 210 bar (3000 psi)

Model code

NV1 – 10 (V) – * – ** – 00

1 2 3 4 5 6

1 Function

NV1 - Needle valve

2 Size

10 - 10 size

3 Seal material

Blank - Buna-N
V - Viton®

4 Adjustment

K - Knob (black)
R - Knob (red)

5 Port size

Code	Port size	Housing number	
		Aluminium light duty	Aluminium fatigue rated
0	Cartridge only		
3B	3/8" BSPP	02–175462	–
6T	SAE 6	566151	–
2G	1/4" BSPP	–	876702
3G	3/8" BSPP	–	876703
6H	SAE 6	–	876700
3G	SAE 8	–	876701

See section J for housing details.

6 Special features

00 - None
(Only required if valve has special features, omit if ("00")

Dimensions
mm (inch)

Torque cartridge in
aluminum housing
47-54 Nm (35-40 ft lbs)

Cartridge only
Basic code
NV1-10

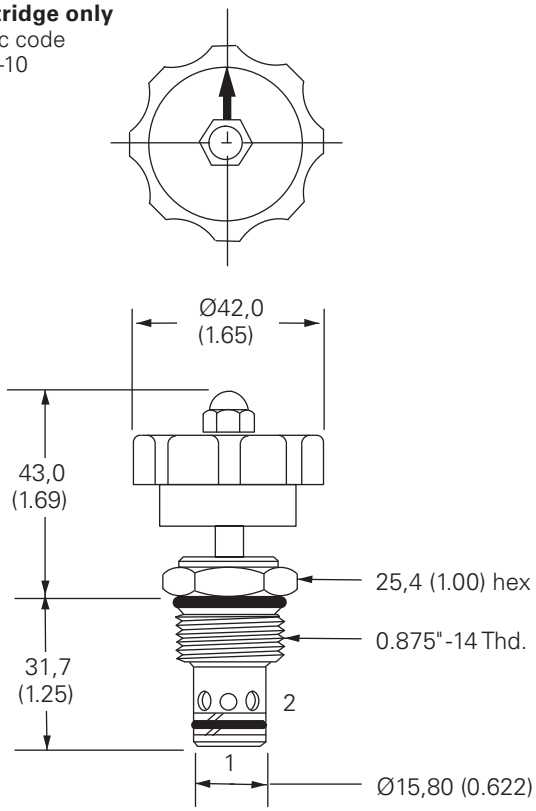

Installation drawing

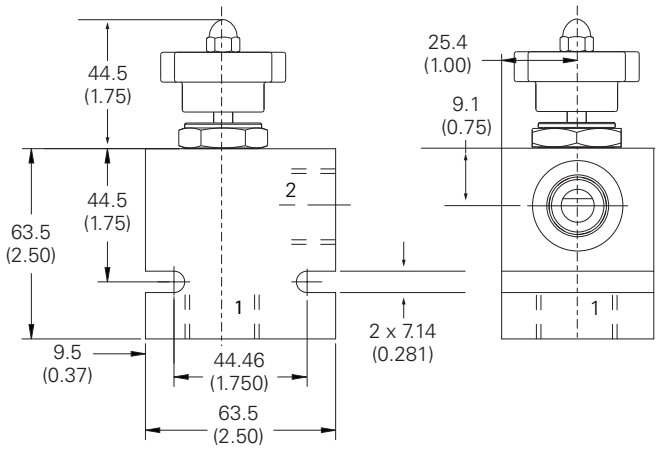

H

Where measurements are critical request certified drawings. We reserve the right to change specifications without notice.

NV1-16 - Flow restrictor valve

Needle
151 L/min (40 USgpm) • 210 bar (3000 psi)

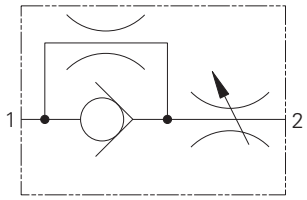

Operation

This needle valve is non-pressure compensated. Flow is controlled in the direction from port 2 to port 1, from full flow to tight shut-off, by turning the adjustment feature clockwise. The flow from port 1 to port 2 will be restricted.

Features

Hardened and ground working components. Cartridge construction for maximum mounting flexibility.

Sectional view

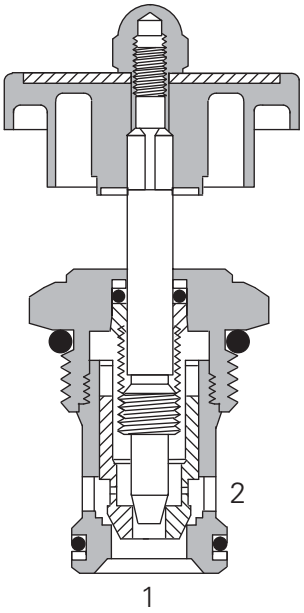

Performance data

Ratings and specifications

Performance data is typical with fluid at 21,8 cSt (105 SUS) and 49°C (120°F)	
Typical application pressure (all ports)	210 bar (3000 psi)
Cartridge fatigue pressure (infinite life)	210 bar (3000 psi)
Rated flow	151 L/min (40 USgpm)
Internal leakage	5 drops/min maximum @ 210 bar (3000 psi)
Temperature range	-40° to 120°C (-40° to 248°F)
Cavity	C–16–2
Fluids	All general purpose hydraulic fluids such as: MIL-H-5606, SAE 10, SAE 20 etc.
Filtration	Cleanliness code 18/**16/13**
Standard housing material	Aluminum
Weight cartridge only	0,34 kg. (0.76 lbs)
Seal kit	565810 (Buna-N), 889609 (Viton®)

Viton is a registered trademark of E.I. DuPont

Description

This is a manually adjusted cartridge type needle valve. With fine control it is ideal for none compensated speed control of actuators or as a control orifice in conjunction with a pressure compensator Total shut off can be achieved allowing the valve
to be used as a shut of valve.

Pressure drop curves

Cartridge only

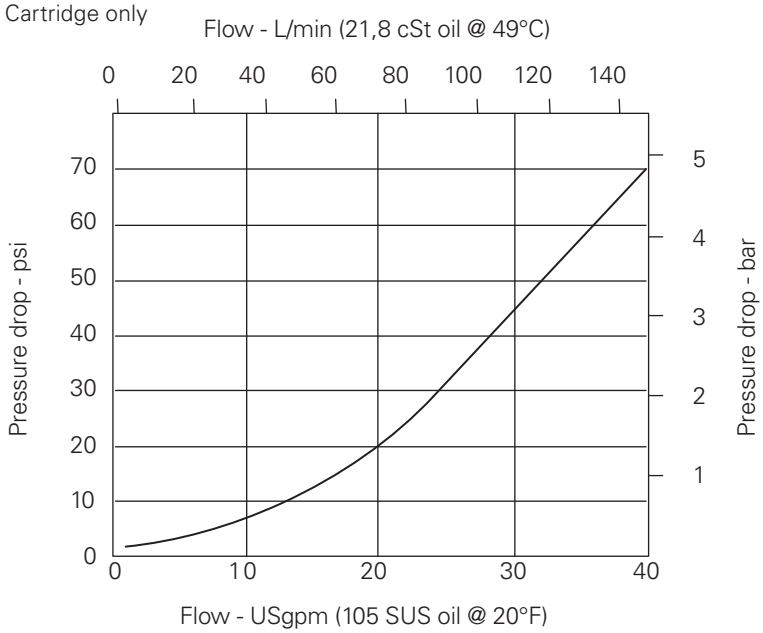

Full open port 2 to port 1

Where measurements are critical request certified drawings. We reserve the right to change specifications without notice.

NV1-16 - Flow restrictor valve

Needle
151 L/min (40 USgpm) • 210 bar (3000 psi)

Model code

NV1 – 16 (V) – * – ** – 00

1 2 3 4 5 6

1 Function

NV1 - Needle valve

2 Size

16 - 16 size

3 Seal material

Blank - Buna-N
V - Viton®

4 Adjustment

K - Knob (black)
R - Knob (red)

5 Port size

Code	Port size	Housing number	
		Aluminium light duty	Aluminium fatigue rated
0	Cartridge only		
6B	3/4" BSPP	02–175463	–
12T	SAE 12	566149	–
4G	1/2" BSPP	–	876716
6G	3/4" BSPP	–	876718
10H	SAE 10	–	876717
12G	SAE 12	–	566113

See section J for housing details.

6 Special features

00 - None
(Only required if valve has special features, omit if ("00")

Dimensions

mm (inch)

Cartridge only
Basic code
NV1-16

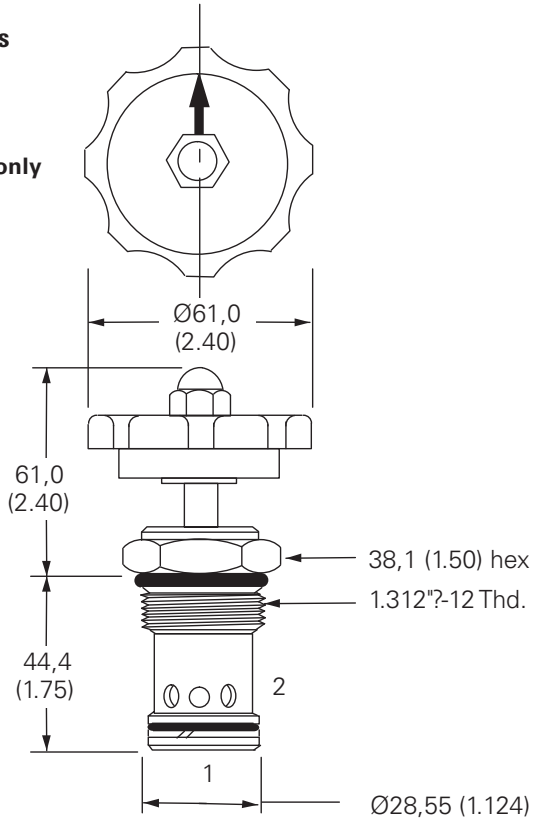

Torque cartridge in
aluminum housing
108-122 Nm (80-90 ft lbs)

Installation drawing

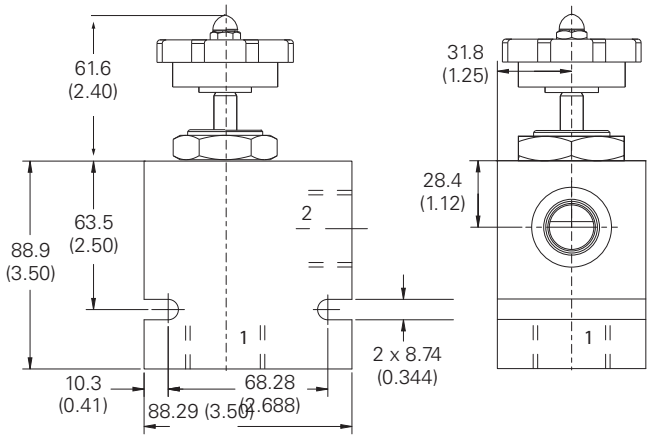

H

Where measurements are critical request certified drawings. We reserve the right to change specifications without notice.

NV1-20 - Flow restrictor valve

Needle
265 L/min (70 USgpm) • 210 bar (3000 psi)

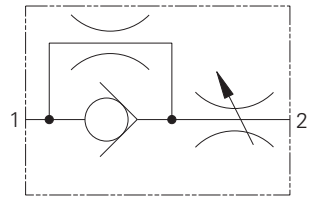

Operation

This needle valve is non-pressure compensated. Flow is controlled in the direction from port 2 to port 1, from full flow to tight shut-off, by turning the adjustment feature clockwise. The flow from port 1 to port 2 will be restricted.

Features

Hardened and ground working components. Cartridge construction for maximum mounting flexibility.

Sectional view

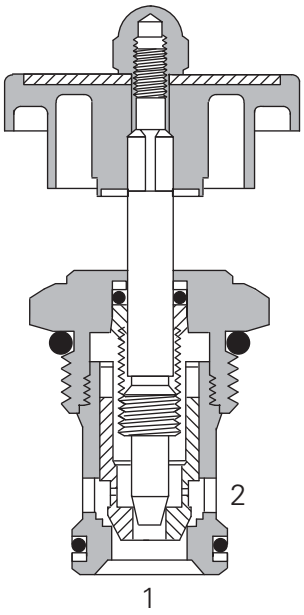

Performance data

Ratings and specifications

Performance data is typical with fluid at 21,8 cSt (105 SUS) and 49°C (120°F)	
Typical application pressure (all ports)	210 bar (3000 psi)
Cartridge fatigue pressure (infinite life)	210 bar (3000 psi)
Rated flow	265 L/min (70 USgpm)
Internal leakage	5 drops/min maximum @ 210 bar (3000 psi)
Temperature range	-40° to 120°C (-40° to 248°F)
Cavity	C–20–2
Fluids	All general purpose hydraulic fluids such as: MIL-H-5606, SAE 10, SAE 20 etc.
Filtration	Cleanliness code 18/**16/13**
Standard housing material	Aluminum
Weight cartridge only	0,59 kg. (1.3 lbs)
Seal kit	889615 (Buna-N), 889619 (Viton®)

Viton is a registered trademark of E.I. DuPont

Description

This is a manually adjusted cartridge type needle valve. With fine control it is ideal for none compensated speed control of actuators or as a control orifice in conjunction with a pressure compensator Total shut off can be achieved allowing the valve to be used as a shut of valve.

Pressure drop curves

Cartridge only

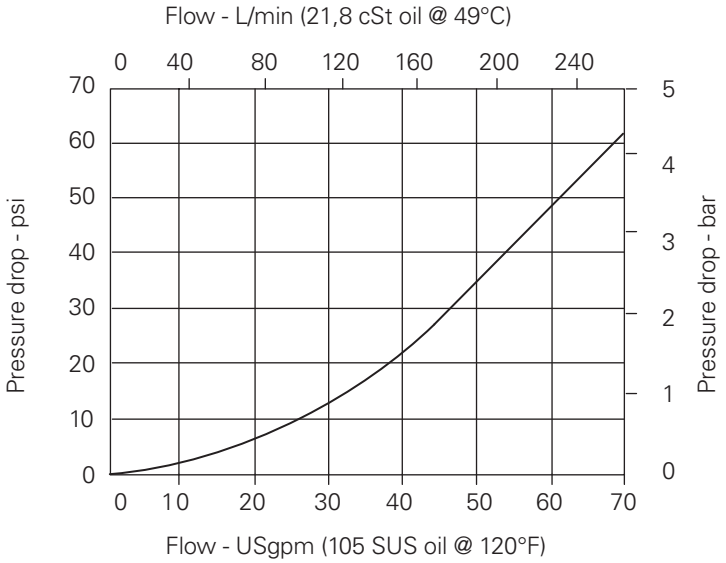

Full open port 2 to port 1

Where measurements are critical request certified drawings. We reserve the right to change specifications without notice.

NV1-20 - Flow restrictor valve

Needle
265 L/min (70 USgpm) • 210 bar (3000 psi)

Model code

NV1 – 20 (V) – * – ** – 00

1 2 3 4 5 6

1 Function

NV1 - Needle valve

2 Size

20 - 20 size

3 Seal material

Blank - Buna-N
V - Viton®

4 Adjustment means

K - Knob (black)
R - Knob (red)

5 Port size

Code	Port size	Housing number	
		Aluminium light duty	Aluminium fatigue rated
0	Cartridge only		
8B	1" BSPP	02-175464	–
16T	SAE 16	566409	–
6G	3/4" BSPP	–	876732
8G	1" BSPP	–	876734
12H	SAE 12	–	876733
16H	SAE 16	–	876735

See section J for housing details.

6 Special features

00 - None
(Only required if valve has special features, omit if ("00")

Dimensions

mm (inch)

Torque cartridge in aluminum housing
128-155 Nm (95-115 ft lbs)

Cartridge only
Basic code
NV1-20

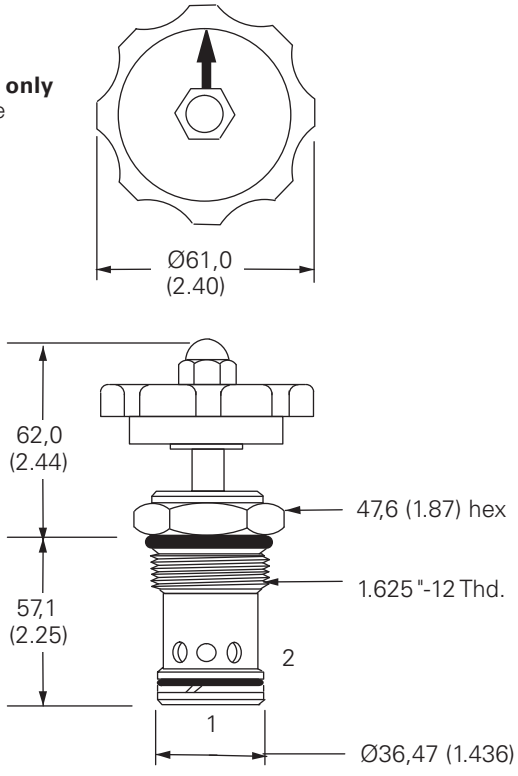

Installation drawing

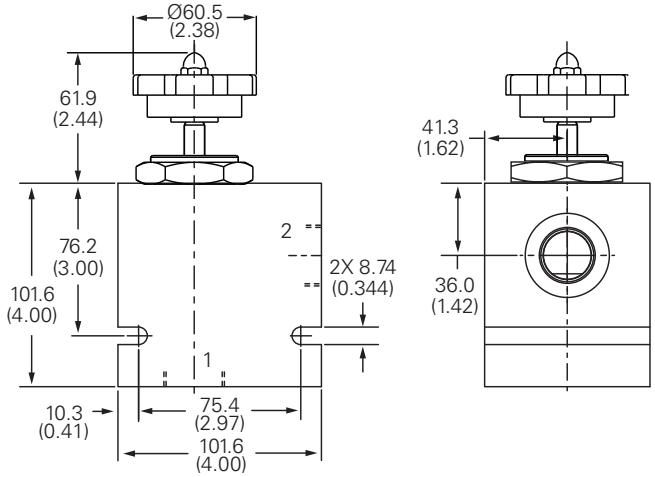

Where measurements are critical request certified drawings. We reserve the right to change specifications without notice.

FCV7-10 - Flow restrictor valve

Needle
Up to 45 L/min (12 USgpm) • 210 bar (3000 psi)

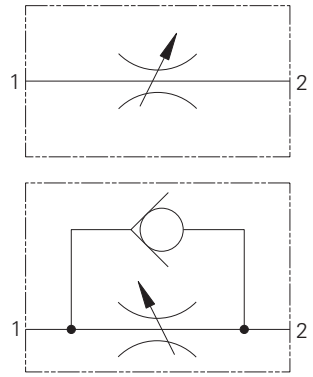

Operation

This needle valve is a variable orifice used to create a pressure drop when flow passes from port 1 to 2 or port 2 to 1. Clockwise rotation of the adjust screw de-creases the orifice size to completely closed and anti-clockwise increases the orifice. The setting can be locked using the lock nut on the adjust screw

Features

Hardened and ground working components. Cartridge construction for maximum mounting flexibility.

Sectional view

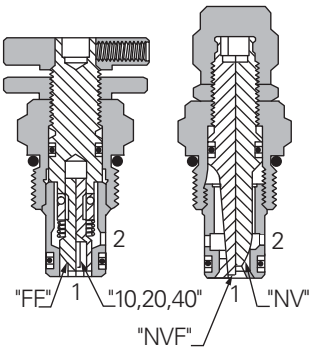

Performance data

Ratings and specifications

Performance data is typical with fluid at 21,8 cSt (105 SUS) and 49°C (120°F)	
Typical application pressure (all ports)	210 bar (3000 psi)
Rated flow	45 L/min (12 USgpm)
Temperature range	-40° to 120°C (-40° to 248°F)
Cavity	C–10–2
Fluids	All general purpose hydraulic fluids such as: MIL–H–5606, SAE 10, SAE 20, etc.
Filtration	ISO 4406, class 18/**16/13** or cleaner
Standard housing materials	Aluminum
Weight cartridge only	0,11 kg (0.25 lbs.)
Seal kits	565806 Buna N 889627 Viton®

Viton is a registered trademark of E.I. DuPont

Pressure drop

Cartridge only

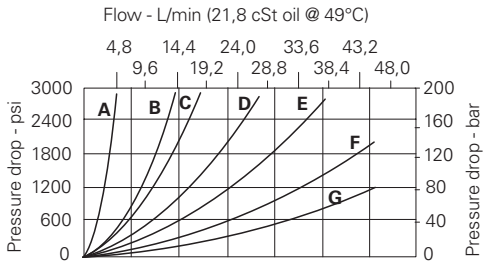

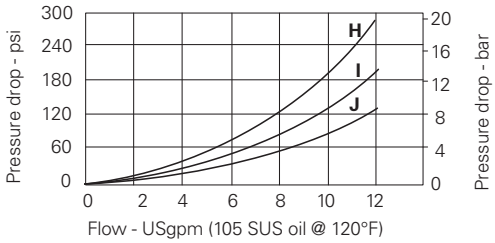

Description

This is a manually adjusted cartridge type needle valve. With fine control it is ideal for none compensated speed control of actuators or as a control orifice in conjunction with a pressure compensator Total shut off can be achieved allowing the valve to be used as a shut of valve.

Typical flow regulation (full open)

Curve	Code option*	Flow direction port:	Valve condition
A	10	2 to 1 1 to 2	Open Closed
B	20	2 to 1 1 to 2	Open Closed
C	10	1 to 2	Open
D	40	2 to 1 1 to 2	Open Closed
E	NVF	Both directions	Open

Curve	Code option	Flow direction port	Valve condition
F	20	1 to 2	Open
G	40	1 to 2	Open
H	FF	2 to 1	Open
I	FF	1 to 2	Open & Closed
J	NV	Both directions	Open

*See controlled flow option in model code.

Where measurements are critical request certified drawings. We reserve the right to change specifications without notice.

FCV7-10 - Flow restrictor valve

Needle
Up to 45 L/min (12 USgpm) • 210 bar (3000 psi)

Model code

FCV7 – 10 (V) – * – ** – * – 00**

1 2 3 4 5 6 7

1 Function

FCV7 – Flow regulator

2 Size

10 - 10 size

3 Seal material

Blank - Buna-N
V - Viton®

4 Style

C - Cap
K - Knob
S - Screw

5 Port size

Code	Port size	Housing number	
		Aluminium light duty	Aluminium fatigue rated
3B	3/8" BSPP	02–175462	–
6T	SAE 6	566151	–
2G	1/4" BSPP	–	876702
3G	3/8" BSPP	–	876703
6H	SAE 6	–	8767008H
8H	SAE 8	–	876701

See section J for housing details.

6 Controlled flow option

		Maximum flow range (nominal)
NV	Needle valve	0-45 L/min (0-12 USgpm)
NVF	Needle valve, fine	0-38 L/min (0-10 USgpm)
FF	Needle valve with free reverse flow	0-45 L/min (0-12 USgpm)
10	Flow range, type 10, with free reverse flow	0-6,6 L/min (0-1.75 USgpm)
20	Flow range, type 20, with free reverse flow	0-14 L/min (0-3.75 USgpm)
40	Flow range, type 40, with free reverse flow	0-27 L/min (0-7.25 USgpm)

7 Special features

00 - None
(Only required if valve has special features, omit if ("00")

Dimensions
mm (inch)

Torque cartridge in aluminum housing to 47–54 Nm (35–40 ft.lbs)

Cartridge only
Basic code FCV7-10

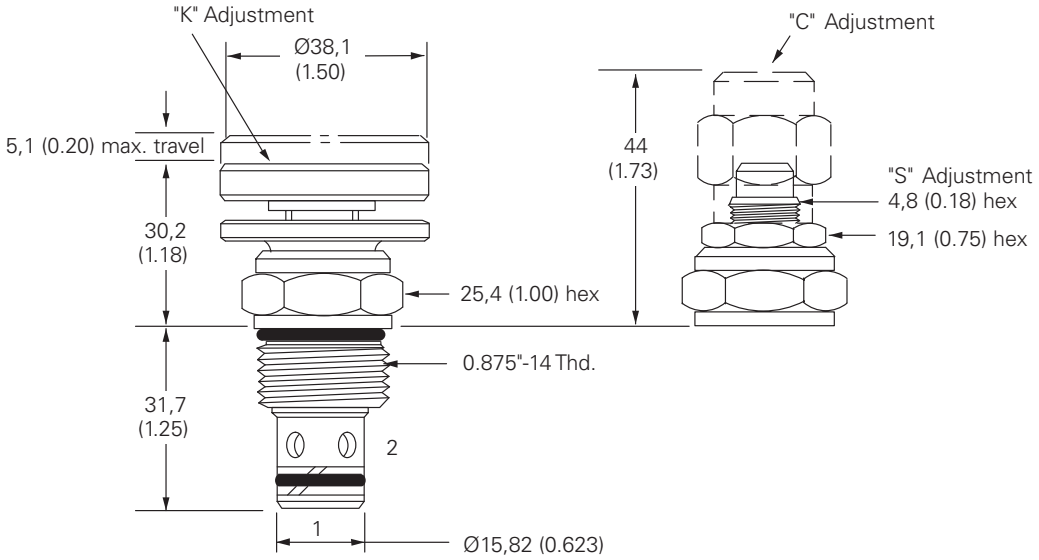

Where measurements are critical request certified drawings. We reserve the right to change specifications without notice.

FCV11-12 - Flow restrictor valve

Needle
114 L/min • 350 bar (5000 psi)

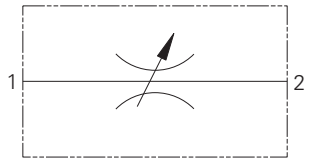

Operation

This needle valve is a variable orifice used to create a pressure drop when flow passes from port 1 to 2 or port 2 to 1. Clockwise rotation of the adjust screw de-creases the orifice size to completely closed and anti-clockwise increases the orifice. The setting can be locked using the lock nut on the adjust screw.

Features

Hardened and ground working components. Cartridge construction for maximum mounting flexibility.

Sectional view

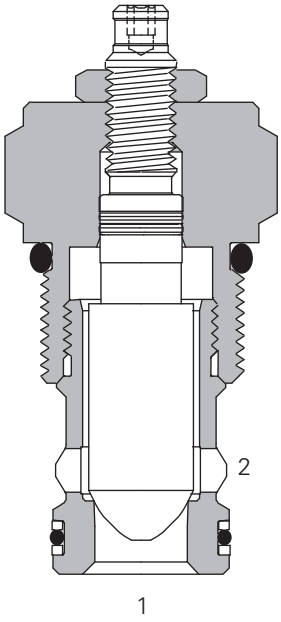

Performance data

Ratings and specifications

Performance data is typical with fluid at 21,8 cSt (105 SUS) and 49°C (120°F)	
Typical application pressure (all ports)	350 bar (5000 psi) Port "1" to "2" 210 bar (3000 psi) Port "1" to "2"
Cartridge fatigue pressure (infinite life)	350 bar (5000 psi)
Rated flow	114 L/min (30 USgpm)
Internal leakage	less than 5 drops/min maximum @ 210 bar (3000 psi)
Temperature range	-40° to 120°C (-40° to 248°F)
Cavity	C-12-2 or C-12-2U
Fluids	All general purpose hydraulic fluids such as MIL-H-5606, SAE 10, SAE 20 etc.
Filtration	Cleanliness code 18/**16/13**
Standard housing material	Aluminum or steel
Weight cartridge only	0,24 kg (0.54 lbs)
Seal kit	2–165889 (Buna-N) 02–165888 (Viton®)

Viton is a registered trademark of E.I. DuPont

Description

This is a manually adjusted cartridge type needle valve. With fine control it is ideal for none compensated speed control of actuators or as a control orifice in conjunction with a pressure compensator Total shut off can be achieved allowing the valve to be used as a shut of valve.

Pressure drop curves

Cartridge only

A - Cartridge with C-12-2 valve body, full open
B - Cartridge with C-12-2U valve body, full open
C - Cartridge only, full open

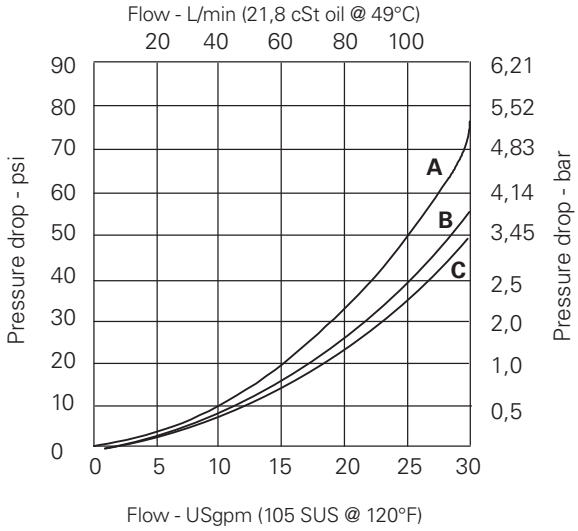

Where measurements are critical request certified drawings. We reserve the right to change specifications without notice.

FCV11-12 - Flow restrictor valve

Needle
114 L/min • 350 bar (5000 psi)

Model code

FCV11 – 12 (V) – S – * – * – (U) – NV – 00**

1 2 3 4 5 6 7 8 9

1 Function
FCV11 - Flow control valve

2 Size
12 - 12 size

3 Seal material
Blank - Buna-N
V - Viton®

4 Adjustment
S - Screw
K - Knob

5 Valve housing material
Blank - No body
A - Aluminum
S - Steel

6 Port size

Code	Port size	Housing number			
		C-12-2U Aluminium fatigue rated	C-12-2 Aluminium fatigue rated	C-12-2U Steel fatigue rated	C-12-2 Steel fatigue rated
0	Cartridge only				
10T(U)	SAE 10	02–160641	02–160640	02–169817	02–169744
12T(U)	SAE 12	02–160645	02–160644	02v169790	02–169782
4G(U)	1/2" BSPP	02–161116	02–161118	02–172512	02–172062
6G(U)	3/4" BSPP	02–161115	02–161117	02–162922	02–169665

See section J for housing details.

7 Cavity
Blank – Cavity without undercut
U – Cavity with undercut

8 Valve type
NV – Needle Valve (Adjustable)

9 Special features
00 - None
(Only required if valve has special features, omit if ("00")

Dimensions
mm (inch)

Torque cartridge in housing
A - 81–95 Nm (60–70 ft lbs)
S - 102–115 Nm (75–85 ft lbs)

Cartridge only
Basic code
FCV11-12

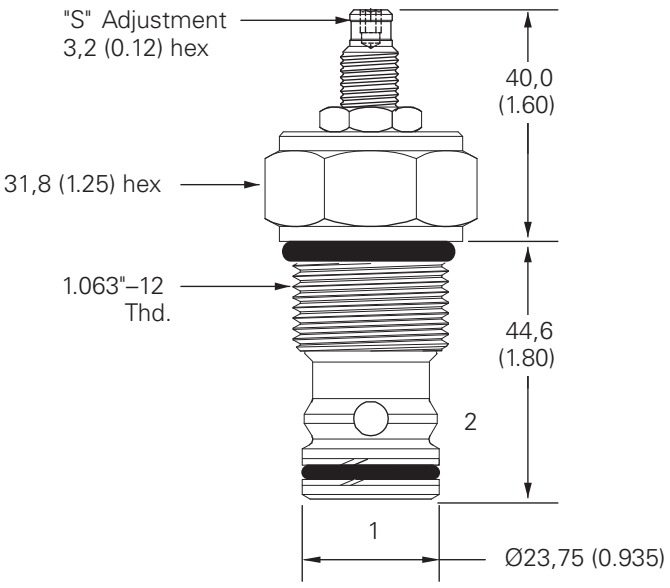

Installation drawing (Steel)

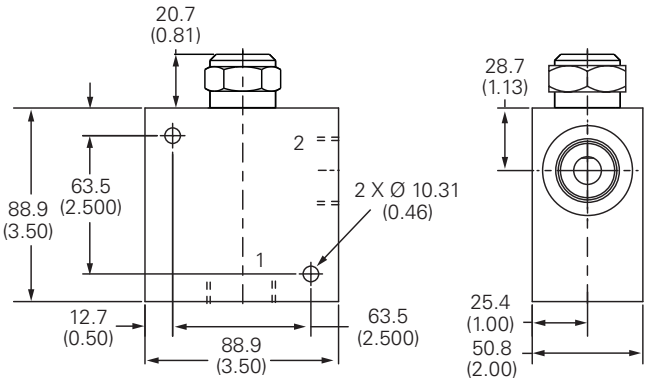

⚠ Warning

Aluminum housings can be used for pressures up to 210 bar (3000 psi). Steel housings **must** be used for operating pressures **above** 210 bar (3000 psi).

Where measurements are critical request certified drawings. We reserve the right to change specifications without notice.

FCV6-16 - Flow restrictor valve

Needle
208 L/min (55 USgpm) • 210 bar (3000 psi)

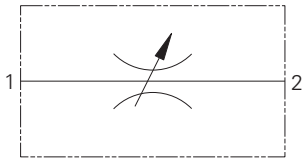

Operation

This needle valve is a variable orifice used to create a pressure drop when flow passes from port 1 to 2 or port 2 to 1.

Clockwise rotation of the adjust screw de-creases the orifice size to completely closed and anti-clockwise increases the orifice. The setting can be locked using the lock nut on the adjust screw.

Features

Hardened and ground working components. Cartridge construction for maximum mounting flexibility.

Sectional view

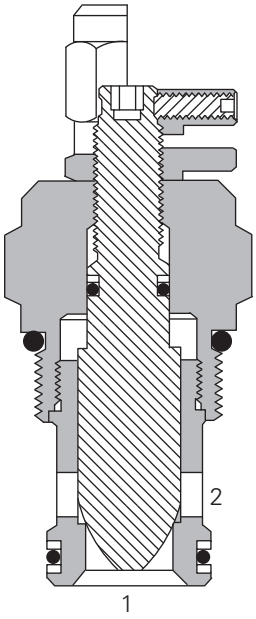

Performance data

Ratings and specifications

Performance data is typical with fluid at 21,8 cSt (105 SUS) and 49°C (120°F)	
Typical application pressure (all ports)	210 bar (3000 psi)
Cartridge fatigue pressure (infinite life)	210 bar (3000 psi)
Rated flow	208 L/min (55 USgpm)
Internal leakage	Port 2 to 1; <5 drops/min maximum @ 210 bar (3000 psi)
Temperature range	-40° to 120°C (-40° to 248°F)
Cavity	C–16–2
Fluids	All general purpose hydraulic fluids such as: MIL-H-5606, SAE 10, SAE 20 etc.
Filtration	Cleanliness code 18/**16/13**
Standard housing material	Aluminum
Weight cartridge only	0,37 kg (0.81 lbs)
Seal kit	889631 (Buna-N) 889635 (Viton®)

Viton is a registered trademark of E.I. DuPont

Description

This is a manually adjusted cartridge type needle valve. With fine control it is ideal for none compensated speed control of actuators or as a control orifice in conjunction with a pressure compensator Total shut off can be achieved allowing the valve to be used as a shut of valve.

Pressure drop

Cartridge only

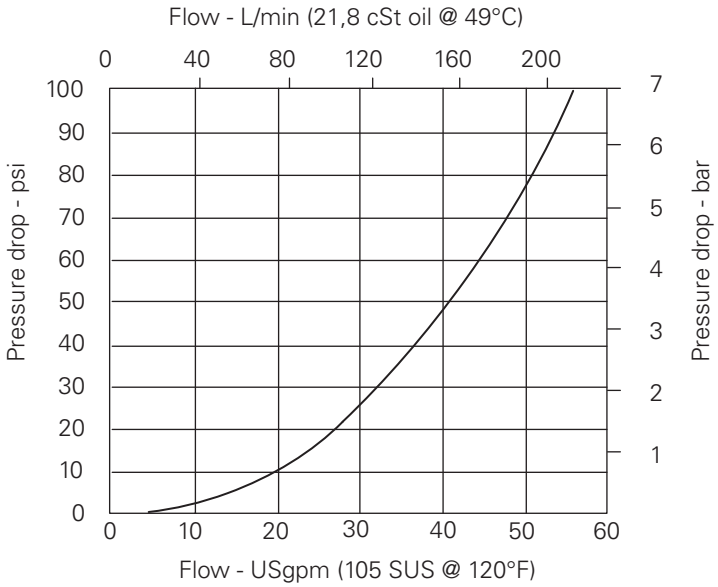

Where measurements are critical request certified drawings. We reserve the right to change specifications without notice.

FCV6-16 - Flow restrictor valve

Needle
208 L/min (55 USgpm) • 210 bar (3000 psi)

Model code

FCV6 – 16 (V) – * – * – NV – 00**

1 2 3 4 5 6 7

1 Function
FCV6 - Needle valve

2 Size
16 - 16 size

3 Seal material
Blank - Buna-N
V - Viton®

4 Adjustment
C - Cap
K – Knob
S – Screw

5 Port size

Code	Port size	Housing number	
		Aluminium light duty	Aluminium fatigue rated
0	Cartridge only		
6B	3/4" BSPP	02–175463	–
12T	SAE 12	566149	–
4G	1/2" BSPP	–	876716
6G	3/4" BSPP	–	876718
10H	SAE 10	–	876717
12H	SAE 12	–	566113

See section J for housing details.

6 Controlled flow option
NV – Needle valve

7 Special features
00 - None

(Only required if valve has special features, omit if ("00")

Dimensions
mm (inch)

Torque cartridge in aluminum housing
108-122 Nm (80-90 ft lbs)

Cartridge only
Basic code
FCV6-16

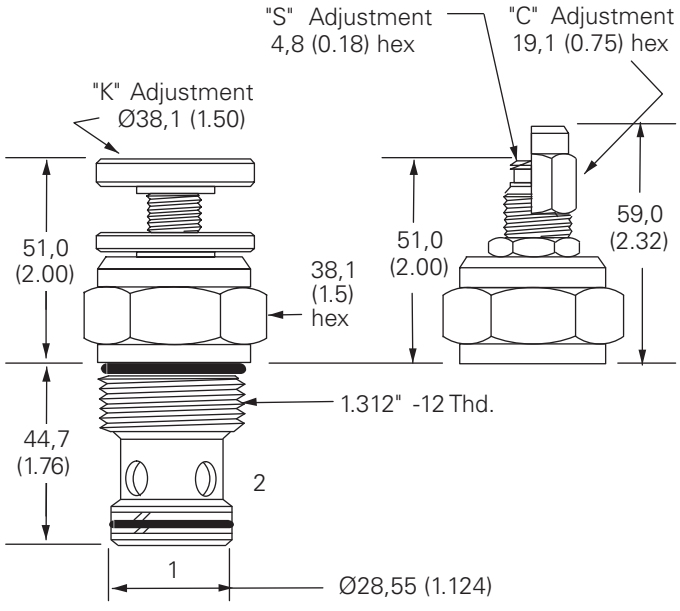

Installation drawing

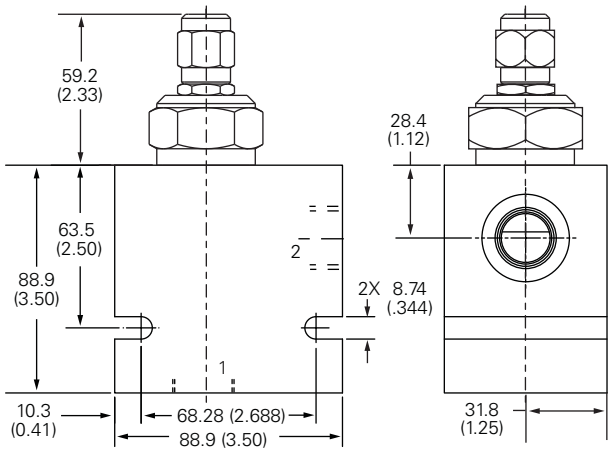

⚠ Warning

Aluminum housings can be used for pressures up to 210 bar (3000 psi). Steel housings **must** be used for operating pressures **above** 210 bar (3000 psi).

H

Where measurements are critical request certified drawings. We reserve the right to change specifications without notice.

PCS3-10 - Pressure compensator

Restrictive
38 L/min (10 USgpm) • 210 bar (3000 psi)

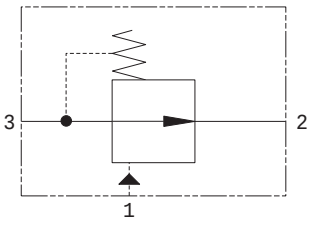

Operation

This valve, when used with either a fixed or variable orifice between port 1 and port 3, maintains a constant flow. This is based on what ever pressure differential is chosen. Flow out of port 2, regardless of pressure, changes downstream on port 2.

Features

Hardened and ground and honed working components. Cartridge construction for maximum mounting flexibility.

Sectional view

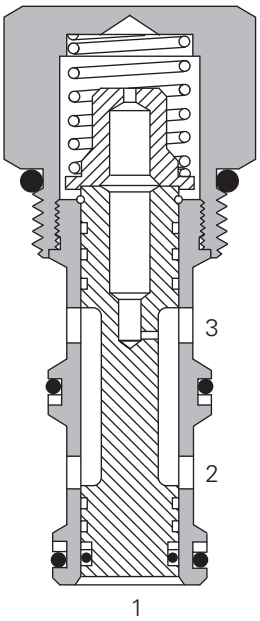

Performance data

Ratings and specifications

Performance data is typical with fluid at 21,8 cSt (105 SUS) and 49° C (120° F)	
Typical application pressure (all ports)	210 bar (3000 psi)
Cartridge fatigue pressure (infinite life)	210 bar (3000 psi)
Rated flow	38 L/min (10 USgpm)
Cavity	C-10-3
Standard housing materials	Customized housings are necessary for close-coupling, the compensator and orifice
Temperature range	-40° to 120° C (-40° to 248° F)
Fluids	All general purpose hydraulics fluids such as: MIL-H-5606, SAE 10, SAE 20 etc
Filtration	Cleanliness code 18/**16/13**
Weight cartridge only	0,12 kg (0.26 lbs)
Seal kit	565812 (Buna-N), 889611 (Viton®)

Viton is a registered trademark of E.I. DuPont

Description

This is a restrictive style compensator suitable for use with a separate needle valve or orifice to provide a pressure compensated flow while the excess oil passes over a relief valve or closes down the compensator on a pump. This, when used in a manifold, is ideal for motor or cylinder speed control either meter in or meter out.

Performance characteristics

Cartridge only

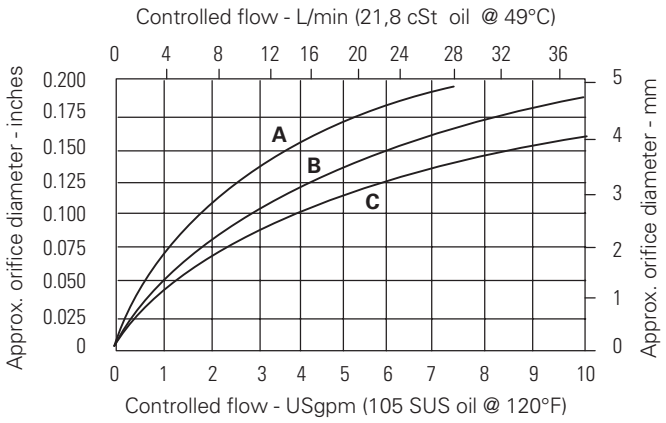

A - 2,8 bar (40 psi) (control ΔP)
B - 5,5 bar (80 psi) (control ΔP)
C - 11,0 bar (160 psi) (control ΔP)

Where measurements are critical request certified drawings. We reserve the right to change specifications without notice.

PCS3-10 - Pressure compensator

Restrictive
38 L/min (10 USgpm) • 210 bar (3000 psi)

Model code

PCS3 – **10** **(V)** – ***** – **(S)** – ******* – **00**

1 2 3 4 5 6 7

1 Function
PCS3 - Pressure compensator restrictive type

2 Size
10 - 10 size

3 Seal material
Blank - Buna-N
V - Viton®

4 Port size
0 - Cartridge only
(Customized housings are necessary for close-coupling, compensator and orifice)

5 Spool seals
Blank - No seal on spool
S - Seal on spool
(For load holding applications where leakage from port 1 to 2 could cause cylinder drift, use of seal will increase hysteresis)

6 Pressure differential (Nominal)
40 - 2,8 bar (40 psi)
60 - 4,1 bar (60 psi)
80 - 5,5 bar (80 psi)
160 - 11,0 bar (160 psi)

7 Special features
00 - None
(Only required if valve has special features, omit if ("00")

Dimensions

mm (inch)

Torque into aluminum housing to 47-54 Nm (35-40 ft lbs)

Cartridge only
Basic code
PCS3-10

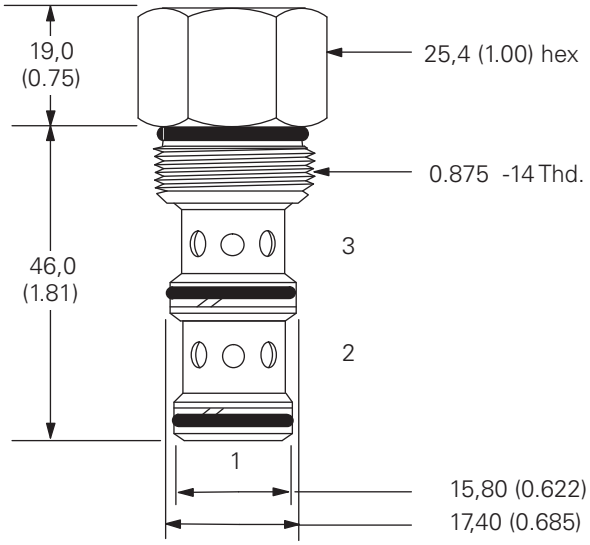

Where measurements are critical request certified drawings. We reserve the right to change specifications without notice.

PCS13-10 - Pressure compensator

Restrictive
38 L/min (10 USgpm) • 350 bar (5000 psi)

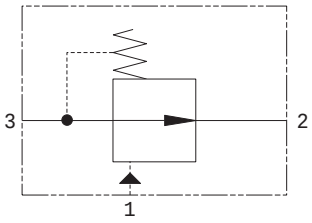

Operation

This valve, when used with either a fixed or variable orifice between port 1 and port 3, maintains a constant flow. This is based on what ever pressure differential is chosen. Flow out of port 2, regardless of pressure, changes downstream on port 2.

Features

Hardened and ground and honed working components. Cartridge construction for maximum mounting flexibility. Working pressure 350 bar.

Sectional view

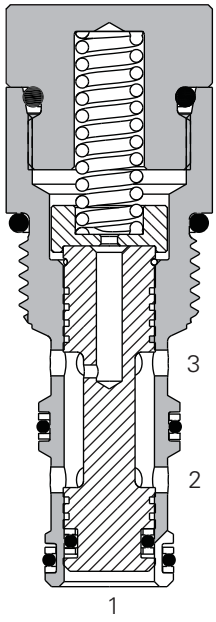

Performance data

Ratings and specifications

Performance data is typical with fluid at 21,8 cSt (105 SUS) and 49°C (120°F)	
Typical application pressure (all ports)	350 bar (5000 psi)
Cartridge fatigue pressure (infinite life)	350 bar (5000 psi)
Rated flow	38 L/min (10 USgpm)
Cavity	C-10-3
Standard housing materials	Customized housings are necessary for close-coupling, the compensator and orifice
Temperature range	-40° to 120°C (-40° to 248°F)
Fluids	All general purpose hydraulic fluids such as MIL-H-5606, SAE 10, SAE 20, etc.
Filtration	Cleanliness code 8/**16/13**
Weight cartridge only	0,12 kg (0.26 lbs) Weight cartridge only
Seal kit	5565818 (Buna-N) 889611 (Viton®)

Viton is a registered trademark of E.I. DuPont

Description

This is a high pressure restrictive style compensator suitable for use with a separate needle valve or orifice to provide a pressure compensated flow while the excess oil passes over a relief valve or closes down the compensator on a pump. This, when used in a manifold, is ideal for motor or cylinder speed control either meter in or meter out.

Performance characteristics

Cartridge only

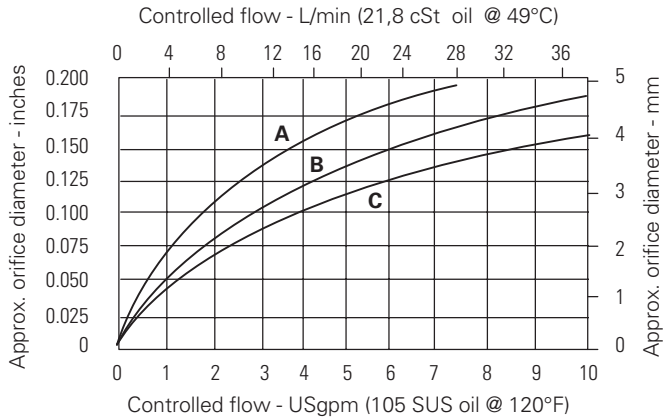

A - 2,8 bar (40 psi) (control Δ P)

B - 5,5 bar (80 psi) (control Δ P)

C - 11,0 bar (160 psi) (control Δ P)

Where measurements are critical request certified drawings. We reserve the right to change specifications without notice.

PCS13-10 - Pressure compensator

Restrictive
38 L/min (10 USgpm) • 350 bar (5000 psi)

Model code

PCS13 – 10 (V) – * – (S) – * – 00**

1 2 3 4 5 6 7

1 Function
PCS13 - Pressure compensator restrictive type

2 Size
10 - 10 Size

3 Seals
Blank - Buna-N
V - Viton®

4 Port size
0 - Cartridge only
(Customized housings are necessary for close-coupling, compensator and orifice)

5 Spool seals
Blank - No seal on spool
S - Seal on spool.
(For load holding applications were leakage from port 1 to 2 could cause cylinder drift, use of seal will increase hysteresis)

6 Pressure differential
40 - 2,8 bar (40 psi)
80 - 5,5 bar (80 psi)
160 - 11,0 bar (160 psi)

7 Special features
00 - None
(Only required if valve has special features, omitted if "00.")

Dimensions
mm (inch)

Cartridge only
Basic code
PCS13-10

Torque into aluminum housing to 47-54 Nm (35-40 ft. lbs)

Torque into steel housing to 68-75 Nm (50-55 ft. lbs)

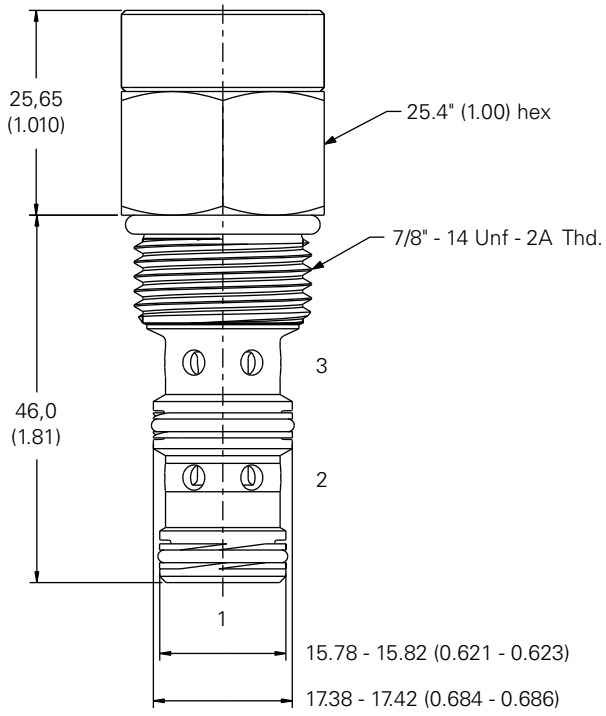

⚠ Warning
Aluminum housings can be used for pressures up to 210 bar (3000 psi). Steel housings **must** be used for operating pressures **above** 210 bar (3000 psi).

H

Where measurements are critical request certified drawings. We reserve the right to change specifications without notice.

PCS3-12 - Pressure compensator

Restrictive
58 L/min (15 USgpm) • 240 bar (3500 psi)

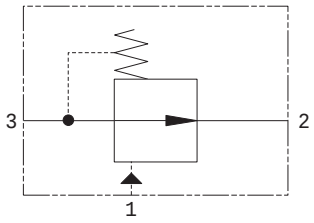

Operation

This valve, when used with either a fixed or variable orifice between port 1 and port 3, maintains a constant flow. This is based on what ever pressure differential is chosen. Flow out of port 2, regardless of pressure, changes downstream on port 2.

Features

Hardened and ground and honed working components. Cartridge construction for maximum mounting flexibility.

Sectional view

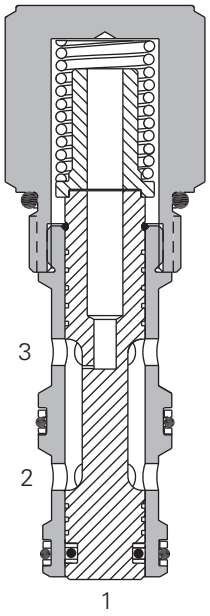

Performance data

Ratings and specifications

Performance data is typical with fluid at 21,8 cSt (105 SUS) and 49° C (120° F)	
Typical application pressure (all ports)	240 bar (3500 psi)
Cartridge fatigue pressure (infinite life)	240 bar (3500 psi)
Rated flow	58 L/min (15 USgpm)
Cavity	C-12-3
Standard housing materials	Customized housings are necessary for close-coupling, the compensator and orifice
Temperature range	-40° to 120° C (-40° to 248° F)
Fluids	All general purpose hydraulics fluids such as MIL-H-5606, SAE 10, SAE 20 etc
Filtration	Cleanliness code 18/**16/13**
Weight cartridge only	0,30 kg (0.55 lbs)
Seal kit	9900333-000 (Buna-N) 9900334-000 (Viton®)

Viton is a registered trademark of E.I. DuPont

Description

This is a restrictive style compensator suitable for use with a separate needle valve or orifice to provide a pressure compensated flow while the excess oil passes over a relief valve or closes down the compensator on a pump. This, when used in a manifold, is ideal for motor or cylinder speed control either meter in or meter out.

Performance characteristics

Cartridge only

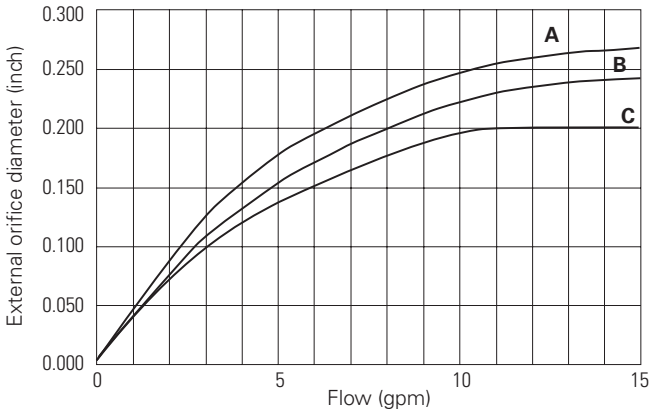

A - 2,8 bar (40 psi) (control DP)
B - 5,5 bar (80 psi) (control DP)
C - 11,0 bar (160 psi) (control DP)

Where measurements are critical request certified drawings. We reserve the right to change specifications without notice.

PCS3-12 - Pressure compensator

Restrictive
58 L/min (15 USgpm) • 240 bar (3500 psi)

Model code

PCS3 – 12 (V) – * – (S) – * – 00**

1 2 3 4 5 6 7

1 Function
DCS3 - Pressure compensator restrictive type

2 Size
12 - 12 size

3 Seal material
Blank - Buna-N
V - Viton®

4 Port size
0 - Cartridge only
(Customized housings are necessary for close-coupling, compensator and orifice)

5 Spool seals
Blank - No seal on spool
S - Seal on spool
(For load holding applications where leakage from port 1 to 2 could cause cylinder drift, use of seal will increase hysteresis)

6 Pressure differential (Nominal)
40 - 2,8 bar (40 psi)
80 - 5,5 bar (80 psi)
120 - 8,3 bar (120 psi)

7 Special features
00 - None
(Only required if valve has special features, omit if "00".)

Dimensions

mm (inch)

Torque into aluminum housing to 81-95 Nm (60-70 ft lbs)

Cartridge only
Basic code
PCS3-12

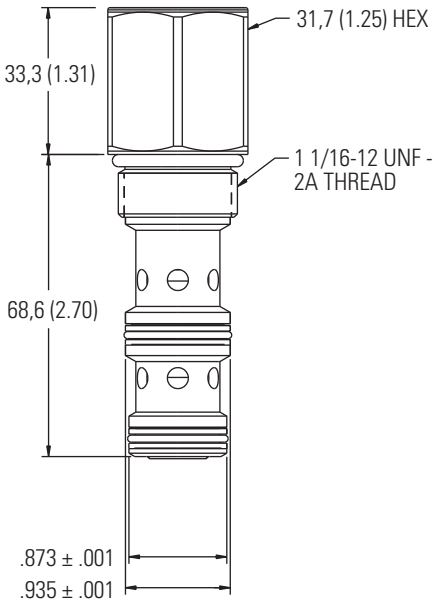

H

Where measurements are critical request certified drawings. We reserve the right to change specifications without notice.

PCS13-12 - Pressure compensator

Restrictive
58 L/min (15 USgpm) • 350 bar (5000 psi)

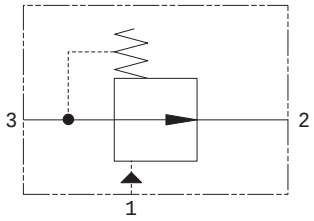

Operation

This valve, when used with either a fixed or variable orifice between port 1 and port 3, maintains a constant flow. This is based on what ever pressure differential is chosen. Flow out of port 2, regardless of pressure, changes downstream on port 2.

Features

Hardened and ground and honed working components. Cartridge construction for maximum mounting flexibility. Working pressure 350 bar.

Sectional view

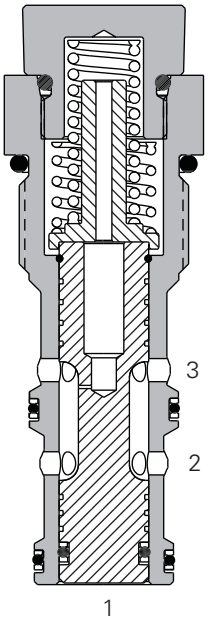

Performance data

Ratings and specifications

Performance data is typical with fluid at 21,8 cSt (105 SUS) and 49°C (120°F)	
Typical application pressure (all ports)	350 bar (5000 psi)
Cartridge fatigue pressure (infinite life)	350 bar (5000 psi)
Rated flow	58 L/min (15 USgpm)
Cavity	C-12-3
Standard housing materials	Customized housings are necessary for close-coupling, the compensator and orifice
Temperature range	-40° to 120°C (-40° to 248°F)
Fluids	All general purpose hydraulic fluids such as MIL-H-5606, SAE 10, SAE 20, etc.
Filtration	Cleanliness code 18/**16/13**
Weight cartridge only	0,30 kg (.55 lbs)
Seal kit	9900333-000 (Buna-N) 9900334-000 (Viton®)

Viton is a registered trademark of E.I. DuPont

Description

This is a high pressure restrictive style compensator suitable for use with a separate needle valve or orifice to provide a pressure compensated flow while the excess oil passes over a relief valve or closes down the compensator on a pump. This, when used in a manifold, is ideal for motor or cylinder speed control either meter in or meter out.

Performance characteristics

Cartridge Only

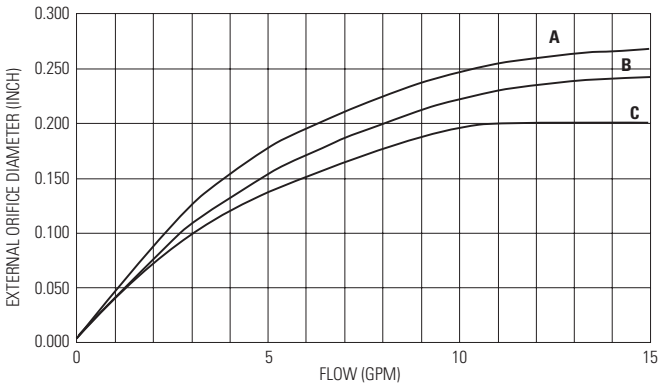

A - 2,8 bar (40 psi) (control Δ P)
B - 5,5 bar (80 psi) (control Δ P)
C - 11,0 bar (160 psi) (control Δ P)

Where measurements are critical request certified drawings. We reserve the right to change specifications without notice.

PCS13-12 - Pressure compensator

58 L/min (15 USgpm) • 350 bar (5000 psi)

Model code

PCS13 – 12 (V) – * – (S) – * – 00**

1 2 3 4 5 6 7

1 Function

PCS13 - Pressure compensator restrictive type

2 Size

12 - 12 Size

3 Seals

Blank - Buna-N
V - Viton®

4 Port size

0 - Cartridge only

(Customized housings are necessary for close-coupling, compensator and orifice)

5 Spool seals

Blank - No seal on spool
S - Seal on spool.

(For load holding applications were leakage from port 1 to 2 could cause cylinder drift, use of seal will increase hysteresis)

6 Pressure differential

40 - 2,8 bar (40 psi)
80 - 5,5 bar (80 psi)
120 - 8,3 bar (120psi)
160 - 11,0 bar (160 psi)

7 Special features

00 - None
(Only required if valve has special features, omitted if "00.")

Dimensions

mm (inch)

Torque into aluminum housing to 81-95 Nm (60-70 ft. lbs)

Torque into steel housing to 102-115 Nm (75-85 ft. lbs)

Cartridge only
Basic code
PCS13-12

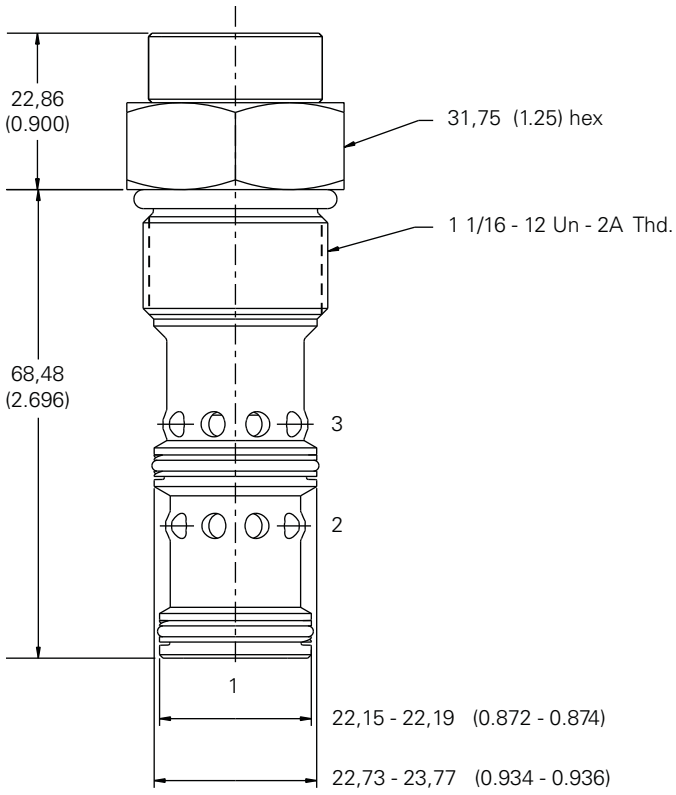

⚠ Warning

Aluminum housings can be used for pressures up to 210 bar (3000 psi). Steel housings **must** be used for operating pressures **above** 210 bar (3000 psi).

H

Where measurements are critical request certified drawings. We reserve the right to change specifications without notice.

PCS3-16 - Pressure compensator

Restrictive

114 L/min (30 USgpm) • 210 bar (3000 psi)

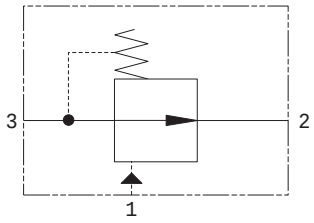

Operation

This valve, when used with either a fixed or variable orifice between port 1 and port 3, maintains a constant flow. This is based on what ever pressure differential is chosen. Flow out of port 2, regardless of pressure, changes downstream on port 2.

Features

Hardened and ground and honed working components. Cartridge construction for maximum mounting flexibility. Working pressure 350 bar.

Sectional view

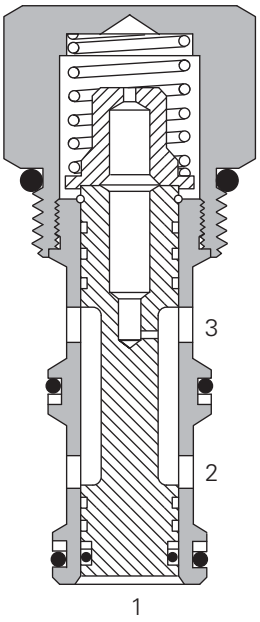

Performance data

Ratings and specifications

Performance data is typical with fluid at 21,8 cSt (105 SUS) and 49° C (120° F)	
Typical application pressure (all ports)	210 bar (3000 psi)
Cartridge fatigue pressure (infinite life)	210 bar (3000 psi)
Rated flow	114 L/min (30 USgpm)
Cavity	C-16-3
Standard housing materials	Customized housings are necessary for close-coupling, the compensator and orifice.
Temperature range	-40° to 120° C (-40° to 248° F)
Fluids	All general purpose hydraulics fluids such as: MIL-H-5606, SAE 10, SAE 20 etc
Filtration	Cleanliness code 18/**16/13**
Weight cartridge only	0,38 kg (0.84 lbs)
Seal kit	565811 (Buna-N) 889610 (Viton®)

Viton is a registered trademark of E.I. DuPont

Description

This is a restrictive style compensator suitable for use with a separate needle valve or orifice to provide a pressure compensated flow while the excess oil passes over a relief valve or closes down the compensator on a pump. This, when used in a manifold, is ideal for motor or cylinder speed control either meter in or meter out.

Performance characteristics

Cartridge only

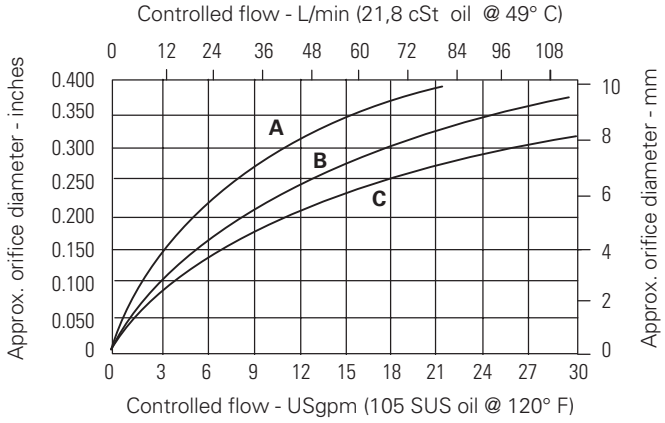

A - 2,8 bar (40 psi) (control ΔP)
B - 5,5 bar (80 psi) (control ΔP)
C - 11,0 bar (160 psi) (control ΔP)

Where measurements are critical request certified drawings. We reserve the right to change specifications without notice.

PCS3-16 - Pressure compensator

Restrictive
114 L/min (30 USgpm) • 210 bar (3000 psi)

Model code

PCS3 – 16 (V) – * – (S) – * – 00**
1 2 3 4 5 6 7

1 Function
PCS3 - Pressure compensator restrictive type

2 Size
16 - 16 size

3 Seal material
Blank - Buna-N
V - Viton®

4 Port size
0 - Cartridge only
(Customized housings are necessary for close-coupling, compensator and orifice)

5 Spool seals
Blank - No seal on spool
S - Seal on spool
(For load holding applications where leakage from port 1 to 2 could cause cylinder drift, use of seal will increase hysteresis)

6 Pressure differential (Nominal)
40 - 2,8 bar (40 psi)
80 - 5,5 bar (80 psi)
160 - 11,0 bar (160 psi)

7 Special features
00 - None
(Only required if valve has special features, omit if "00".)

Dimensions
mm (inch)

Cartridge only
Basic code
PCS3-16

Torque into aluminum housing to 108-122 Nm (80-90 ft lbs)

Torque into steel housing to 136-149 Nm (100-110 ft lbs)

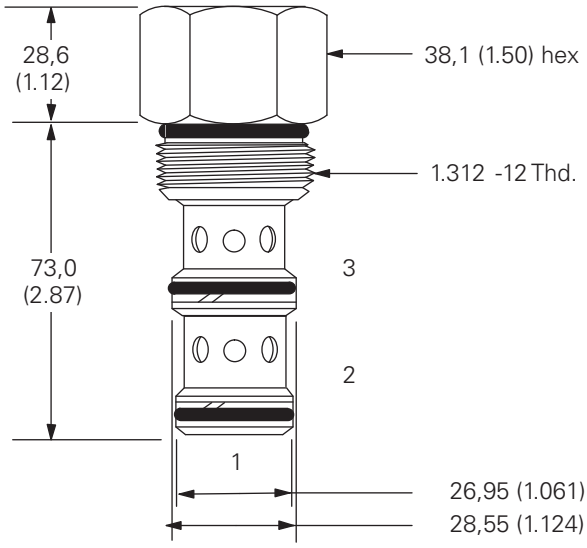

Where measurements are critical request certified drawings. We reserve the right to change specifications without notice.

PCS13-16 - Pressure compensator

Restrictive
114 L/min (30 USgpm) • 350 bar (5000 psi)

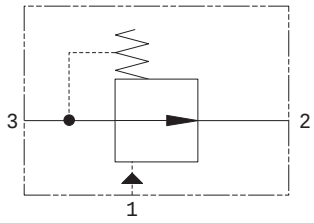

Operation

This valve, when used with either a fixed or variable orifice between port 1 and port 3, maintains a constant flow. This is based on what ever pressure differential is chosen. Flow out of port 2, regardless of pressure, changes downstream on port 2.

Features

Hardened and ground and honed working components. Cartridge construction for maximum mounting flexibility. Working pressure 350 bar.

Sectional view

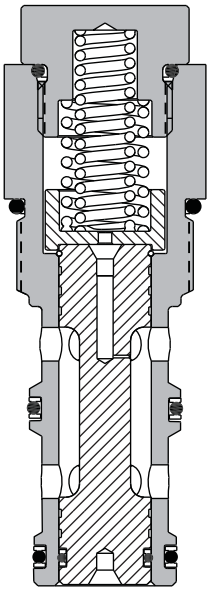

Performance data

Ratings and specifications

Performance data is typical with fluid at 21,8 cSt (105 SUS) and 49°C (120°F)	
Typical application pressure (all ports)	350 bar (5000 psi)
Cartridge fatigue pressure (infinite life)	350 bar (5000 psi)
Rated flow	114 L/min (30 USgpm)
Cavity	C-16-3
Standard housing materials	Customized housings are necessary for close-coupling, the compensator and orifice
Temperature range	-40° to 120°C (-40° to 248°F)
Fluids	All general purpose hydraulic fluids such as: MIL-H-5606, SAE 10, SAE 20, etc.
Filtration	Cleanliness code 18/**16/13**
Weight cartridge only	0,38 kg (.84 lbs)
Seal kit	565811 (Buna-N) 889610 (Viton®)

Viton is a registered trademark of E.I. DuPont

Description

This is a high pressure restrictive style compensator suitable for use with a separate needle valve or orifice to provide a pressure compensated flow while the excess oil passes over a relief valve or closes down the compensator on a pump. This, when used in a manifold, is ideal for motor or cylinder speed control either meter in or meter out.

Performance characteristics

Cartridge Only

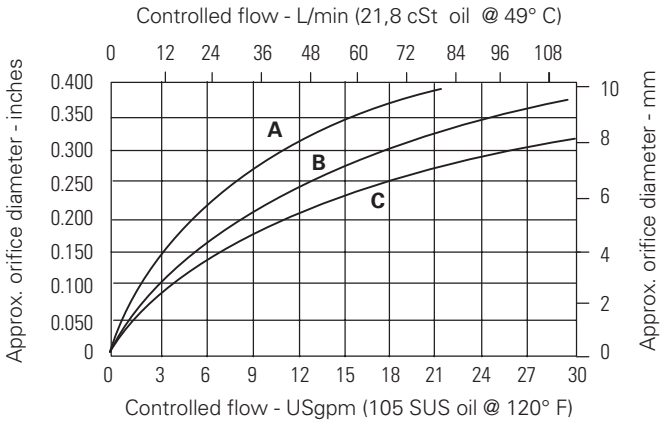

A - 2,8 bar (40 psi) (control Δ P)

B - 5,5 bar (80 psi) (control Δ P)

C - 11,0 bar (160 psi) (control Δ P)

Where measurements are critical request certified drawings. We reserve the right to change specifications without notice.

Model code

PCS13 – 16 (V) – * – (S) – * – 00**

1 2 3 4 5 6 7

1 Function
PCS13 - Pressure compensator restrictive type

2 Size
16 - 16 Size

3 Seals
Blank - Buna-N
V - Viton®

4 Port size
0 - Cartridge only
(Customized housings are necessary for close-coupling, compensator and orifice)

5 Spool seals
Blank - No seal on spool
S - Seal on spool.
(For load holding applications were leakage from port 1 to 2 could cause cylinder drift, use of seal will increase hysteresis)

6 Pressure differential
40 - 2,8 bar (40 psi)
80 - 5,5 bar (80 psi)
160 - 11,0 bar (160 psi)

7 Special features
00 - None
(Only required if valve has special features, omitted if "00.")

Dimensions

mm (inch)

Cartridge only
Basic code
PCS13-16

Torque into aluminum housing to 108-122 Nm (80-90 ft. lbs)

Torque into steel housing to 136-149 Nm (100-110 ft. lbs)

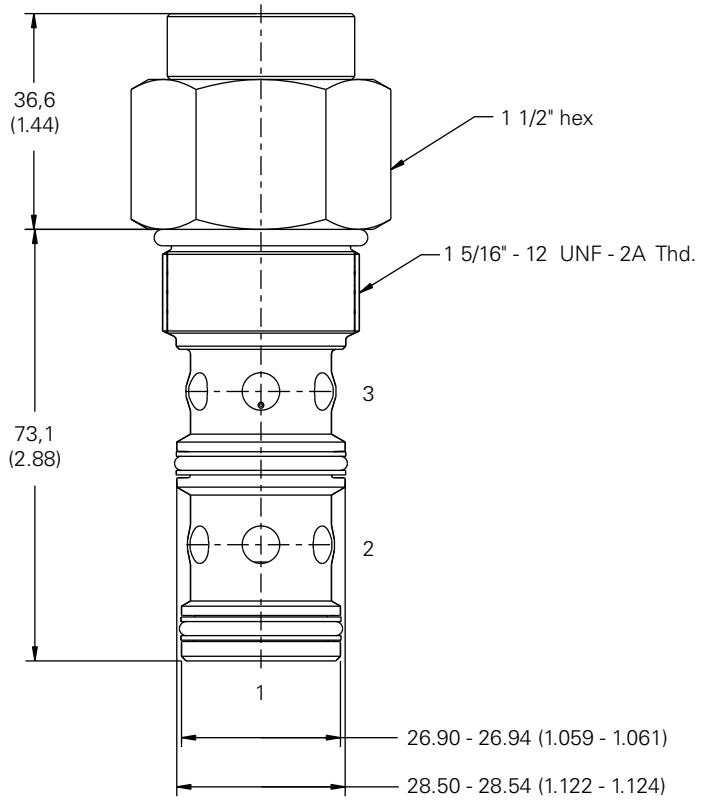

⚠ Warning
Aluminum housings can be used for pressures up to 210 bar (3000 psi). Steel housings **must** be used for operating pressures **above** 210 bar (3000 psi).

H

Where measurements are critical request certified drawings. We reserve the right to change specifications without notice.

PCS3-20 - Pressure compensator

Restrictive
189 L/min (50 USgpm) • 210 bar (3000 psi)

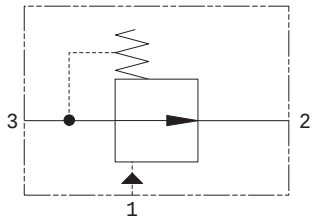

Operation

This valve, when used with either a fixed or variable orifice between port 1 and port 3, maintains a constant flow.

This is based on what ever pressure differential is chosen. Flow out of port 2, regardless of pressure, changes downstream on port 2.

Features

Hardened and ground and honed working components. Cartridge construction for maximum mounting flexibility.

Sectional view

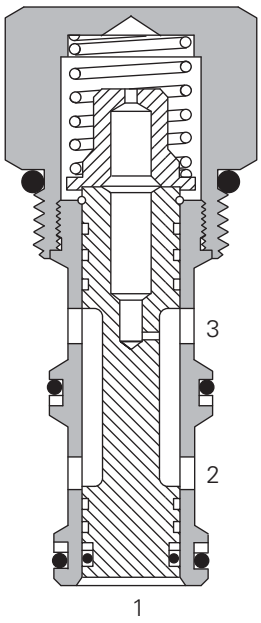

Performance data

Ratings and specifications

Performance data is typical with fluid at 21,8 cSt (105 SUS) and 49° C (120° F)	
Typical application pressure (all ports)	210 bar (3000 psi)
Cartridge fatigue pressure (infinite life)	210 bar (3000 psi)
Rated flow	189 L/min (50 USgpm)
Cavity	C-20-3
Standard housing materials	Customized housings are necessary for close-coupling, the compensator and orifice
Temperature range	-40° to 120° C (-40° to 248° F)
Fluids	All general purpose hydraulics fluids such as: MIL-H-5606, SAE 10, SAE 20 etc
Filtration	Cleanliness code 18/**16/13**
Weight cartridge only	0,88 kg (1.94 lbs)
Seal kit	889616 (Buna-N), 02-175433 (Viton®)

Viton is a registered trademark of E.I. DuPont

Description

This is a restrictive style compensator suitable for use with a separate needle valve or orifice to provide a pressure compensated flow while the excess oil passes over a relief valve or closes down the compensator on a pump. This, when used in a manifold, is ideal for motor or cylinder speed control either meter in or meter out.

Performance characteristics

Cartridge only

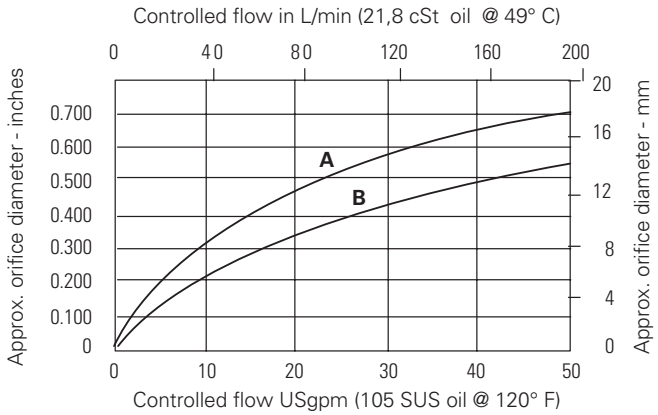

A - 2,8 bar (40 psi) (control ΔP)
B - 5,5 bar (80 psi) (control ΔP)

Where measurements are critical request certified drawings. We reserve the right to change specifications without notice.

PCS3-20 - Pressure compensator

Restrictive
189 L/min (50 USgpm) • 210 bar (3000 psi)

Model code

PCS3	–	20	(V)	–	*	–	(S)	–	***	–	00
1		2	3		4		5		6		7

1 Function
PCS3 - Pressure compensator restrictive type

2 Size
20 - 20 size

3 Seal material
Blank - Buna-N
V - Viton®

4 Port size
0 - Cartridge only
(Customized housings are necessary for close-coupling, compensator and orifice)

5 Spool seals
Blank - No seal on spool
S - Seal on spool
(For load holding applications where leakage from port 1 to 2 could cause cylinder drift, use of seal will increase hysteresis)

6 Pressure differential (Nominal)
40 - 2,8 bar (40 psi)
80 - 5,5 bar (80 psi)

7 Special features
00 - None
(Only required if valve has special features, omit if "00".)

Dimensions
mm (inch)

Cartridge only
Basic code
PCS3-20

Torque into aluminum housing to 128-155 Nm (95-115 ft lbs)

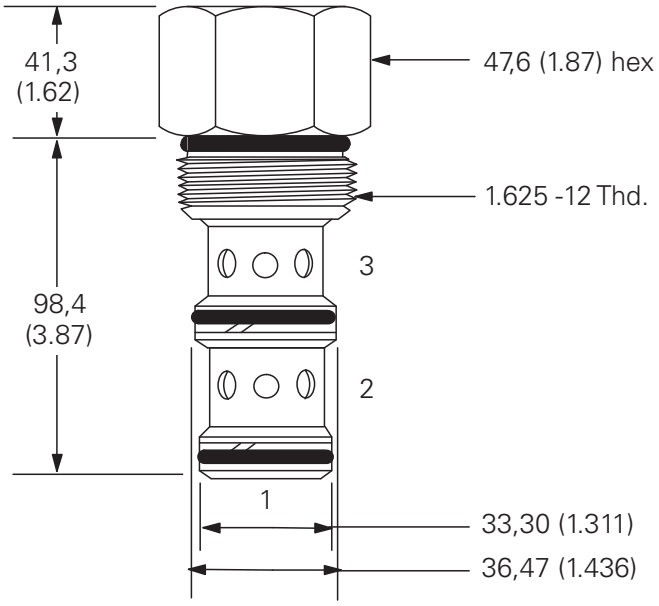

H

Where measurements are critical request certified drawings. We reserve the right to change specifications without notice.

PCS4-10 - Pressure compensator

Bypass or priority
38 L/min (10 USgpm) • 210 bar (3000 psi)

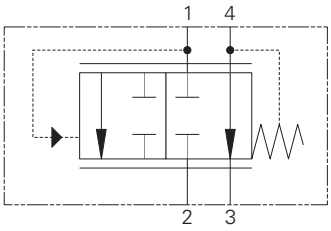

Operation

This valve, when used with either a fixed or variable orifice on port 4, maintains a constant flow out of port 3, regardless of pressure changes downstream of port 3. This is based on whatever pressure differential is chosen.

All flow in excess of the priority requirement is bypassed from port 1 to port 2. If the priority port is deadheaded, the valve will try to direct flow out of the priority port and shut off the bypass flow, blocking of all flow.

Features

Hardened and ground and honed working components. Cartridge construction for maximum mounting flexibility.

Sectional view

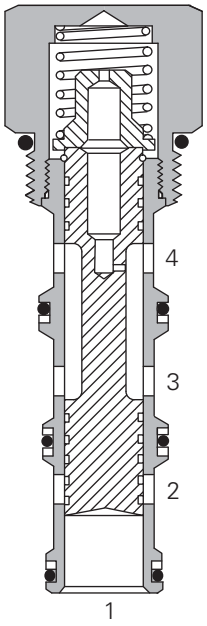

Description

This is a priority style compensator suitable for use with a separate needle valve or orifice to provide a priority pressure compensated flow. This when used in a manifold is ideal for motor or cylinder control where priority is required.

Performance data

Ratings and specifications

Performance data is typical with fluid at 21,8 cSt (105 SUS) and 49° C (120° F)	
Typical application pressure (all ports)	210 bar (3000 psi)
Cartridge fatigue pressure (infinite life)	210 bar (3000 psi)
Rated flow	38 L/min (10 USgpm)
Cavity	C-10-4
Standard housing materials	Customized housings are necessary for close-coupling, the compensator and orifice
Temperature range	-40° to 120° C (-40° to 248° F)
Fluids	All general purpose hydraulics fluids such as: MIL-H-5606, SAE 10, SAE 20 etc
Filtration	Cleanliness code 18/**16/13**
Weight cartridge only	0,14 kg (0.32 lbs)
Seal kit	889651 (Buna-N) 889653 (Viton®)

Viton is a registered trademark of E.I. DuPont

Performance characteristics

Cartridge only

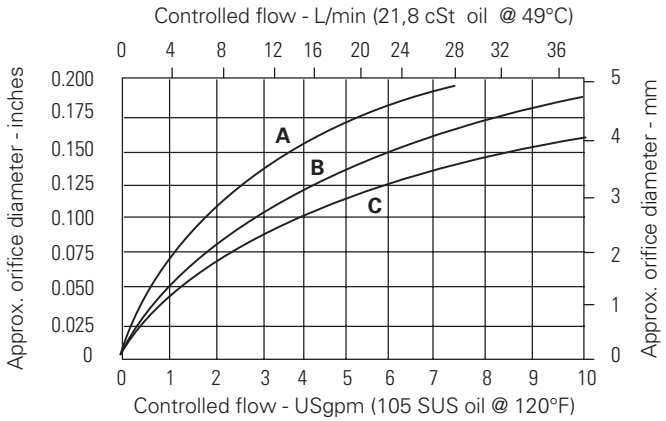

A - 2,8 bar (40 psi) (control ΔP)
B - 5,5 bar (80 psi) (control ΔP)
C - 11,0 bar (160 psi) (control ΔP)

Where measurements are critical request certified drawings. We reserve the right to change specifications without notice.

PCS4-10 - Pressure compensator

Bypass or priority
38 L/min (10 USgpm) • 210 bar (3000 psi)

Model code

PCS4 – **10** **(V)** – ***** – ******* – **00**
1 2 3 4 5 6

1 Function
PCS4 - Pressure compensator restrictive type

2 Size
10 - 10 size

3 Seal material
Blank - Buna-N
V - Viton®

4 Port size
0 - Cartridge only
(Customized housings are necessary for close-coupling, compensator and orifice)

5 Pressure differential (Nominal)
40 - 2,8 bar (40 psi)
80 - 5,5 bar (80 psi)
160 - 11,0 bar (160 psi)

6 Special features
00 - None
(Only required if valve has special features, omit if ("00".)

Dimensions

mm (inch)

Cartridge only
Basic code
PSC4-10

Torque into aluminum housing to 47-54 Nm (35-40 ft lbs)

Torque into steel housing to 68-75 Nm (50-55 ft lbs)

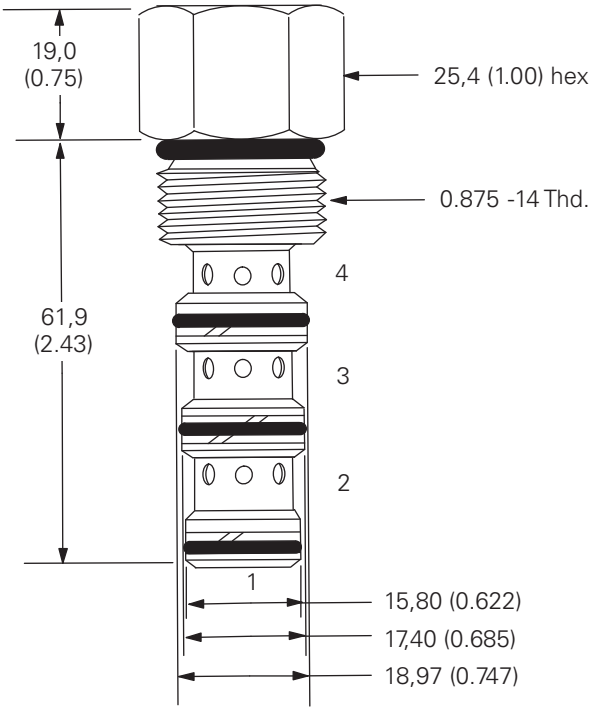

Where measurements are critical request certified drawings. We reserve the right to change specifications without notice.

PCS14-10 - Pressure compensator

Bypass or priority
38 L/min (10 USgpm) • 350 bar (5000 psi)

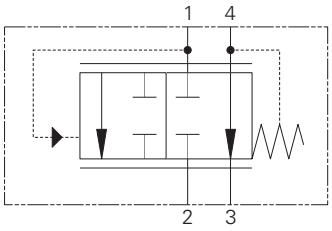

Operation

This valve, when used with either a fixed or variable orifice on port 4, maintains a constant flow out of port 3, regardless of pressure changes downstream of port 3. This is based on whatever pressure differential is chosen. All flow in excess of the priority requirement is bypassed from port 1 to port 2. If the priority port is deadheaded, the valve will try to direct flow out of the priority port and shut off the bypass flow, blocking of all flow.

Features

Hardened and ground and honed working components. Cartridge construction for maximum mounting flexibility. Working pressure 350 bar.

Sectional view

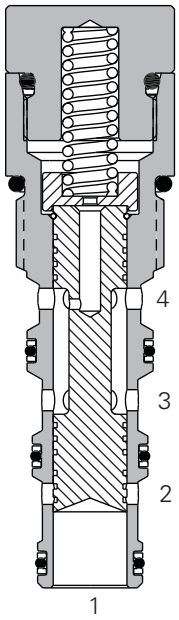

Performance data

Ratings and specifications

Performance data is typical with fluid at 21,8 cSt (105 SUS) and 49°C (120°F)	
Typical application pressure (all ports)	350 bar (5000 psi)
Cartridge fatigue pressure (infinite life)	350 bar (5000 psi)
Rated flow	38 L/min (10 USgpm)
Cavity	C-10-4
Standard housing materials	Customized housings are necessary for close-coupling, the compensator and orifice
Temperature range	-40° to 120°C (-40° to 248°F)
Fluids	All general purpose hydraulic fluids such as MIL-H-5606, SAE 10, SAE 20, etc.
Filtration	Cleanliness code 18/**16/13**
Weight cartridge only	0,14 kg (0.32 lbs)
Seal kit	889651 (Buna-N) 889653 (Viton®)

Viton is a registered trademark of E.I. DuPont

Description

This is a high pressure priority style compensator suitable for use with a separate needle valve or orifice to provide a priority pressure compensated flow. This when used in a manifold is ideal for motor or cylinder control where priority is required.

Performance characteristics

Cartridge only

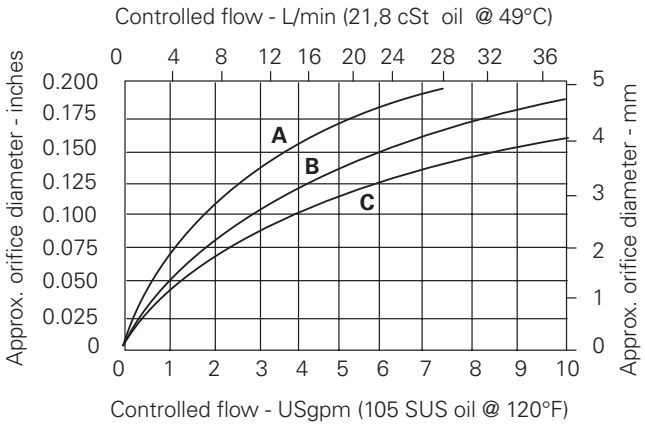

A - 2,8 bar (40 psi) (control Δ P)
B - 5,5 bar (80 psi) (control Δ P)
C - 11,0 bar (160 psi) (control Δ P)

Where measurements are critical request certified drawings. We reserve the right to change specifications without notice.

PCS14-10 - Pressure compensator

Bypass or priority
38 L/min (10 USgpm) • 350 bar (5000 psi)

Model code

PCS14– 10 (V) – * – * – 00**

1 2 3 4 5 6

1 Function
PCS14 - Pressure compensator bypass type

2 Size
10 - 10 Size

3 Seals
Blank - Buna-N
V - Viton®

4 Port size
0 - Cartridge only

(Customized housings are necessary for close-coupling, compensator and orifice)

5 Pressure differential (Nominal)
40 - 2,8 bar (40 psi)
80 - 5,5 bar (80 psi)
160 - 11,0 bar (160 psi)

6 Special features
00 - None
(Only required if valve has special features, omitted if "00.")

Dimensions
mm (inch)

Cartridge only
Basic code
PCS14-10

Torque into aluminum housing to 47-54 Nm (35-40 ft. lbs)

Torque into steel housing to 68-75 Nm (50-55 ft. lbs)

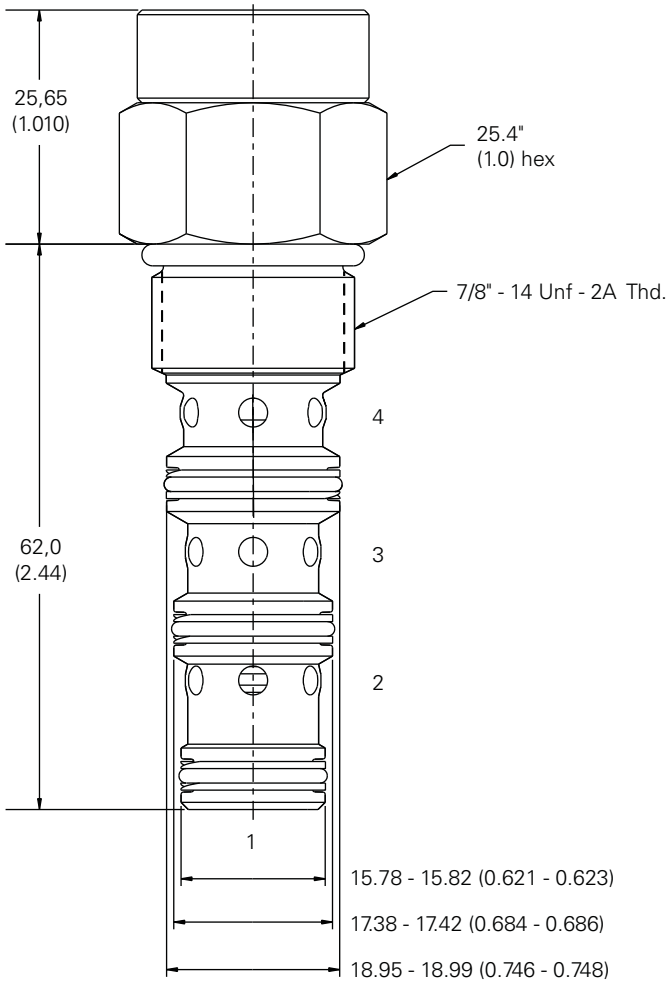

⚠ Warning

Aluminum housings can be used for pressures up to 210 bar (3000 psi). Steel housings **must** be used for operating pressures **above** 210 bar (3000 psi).

Where measurements are critical request certified drawings. We reserve the right to change specifications without notice.

PCS4-12 - Pressure compensator

Bypass or priority
58 L/min (15 USgpm) • 240 bar (3500 psi)

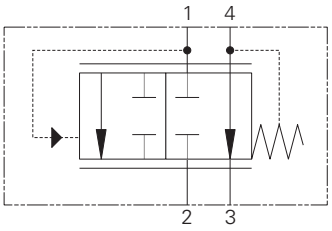

Operation

This valve, when used with either a fixed or variable orifice on port 4, maintains a constant flow out of port 3, regardless of pressure changes downstream of port 3. This is based on whatever pressure differential is chosen.

All flow in excess of the priority requirement is bypassed from port 1 to port 2. If the priority port is deadheaded, the valve will try to direct flow out of the priority port and shut off the bypass flow, blocking of all flow.

Features

Hardened and ground and honed working components. Cartridge construction for maximum mounting flexibility.

Sectional view

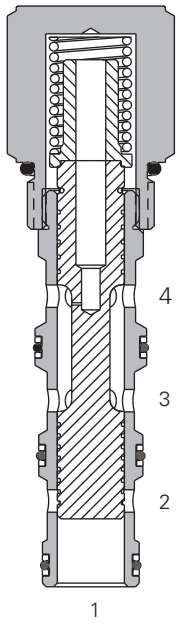

Description

This is a priority style compensator suitable for use with a separate needle valve or orifice to provide a priority pressure compensated flow. This when used in a manifold is ideal for motor or cylinder control where priority is required.

Performance data

Ratings and specifications

Performance data is typical with fluid at 21,8 cSt (105 SUS) and 49° C (120° F)	
Typical application pressure (all ports)	240 bar (3500 psi)
Cartridge fatigue pressure (infinite life)	240 bar (3500 psi)
Rated flow	58 L/min (15 USgpm)
Cavity	C-12-4
Standard housing materials	Customized housings are necessary for close-coupling, the compensator and orifice
Temperature range	-40° to 120° C (-40° to 248° F)
Fluids	All general purpose hydraulics fluids such as: MIL-H-5606, SAE 10, SAE 20 etc
Filtration	Cleanliness code 18/**16/13**
Weight cartridge only	0,36 kg (0.80 lbs)
Seal kit	9900335-000 (Buna-N) 9900336-000 (Viton®)

Viton is a registered trademark of E.I. DuPont

Performance characteristics

Cartridge only

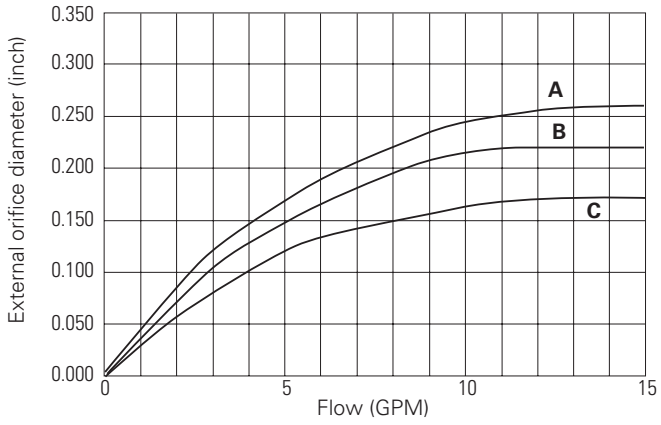

A - 2,8 bar (40 psi) (control DP)
B - 5,5 bar (80 psi) (control DP)
C - 11,0 bar (160 psi) (control DP)

Where measurements are critical request certified drawings. We reserve the right to change specifications without notice.

PCS4-12 - Pressure compensator

Bypass or priority
58 L/min (15 USgpm) • 240 bar (3500 psi)

Model code

PCS4 – 12 (V) – * – * – 00**

1 2 3 4 5 6

1 Function

PCS4 - Pressure compensator restrictive type

2 Size

12 - 12 size

3 Seal material

Blank - Buna-N
V - Viton®

4 Port size

0 - Cartridge only

(Customized housings are necessary for close-coupling, compensator and orifice)

5 Pressure differential (Nominal)

40 - 2,8 bar (40 psi)
80 - 5,5 bar (80 psi)
120 - 8,3 bar (120 psi)

6 Special features

00 - None

(Only required if valve has special features, omit if "00".)

Dimensions

mm (inch)

Cartridge only
Basic code
PCS4-12

Torque into aluminum housing to 81-95 Nm (60-70 ft lbs)

Torque into steel housing to 102-115 Nm (75-85 ft lbs)

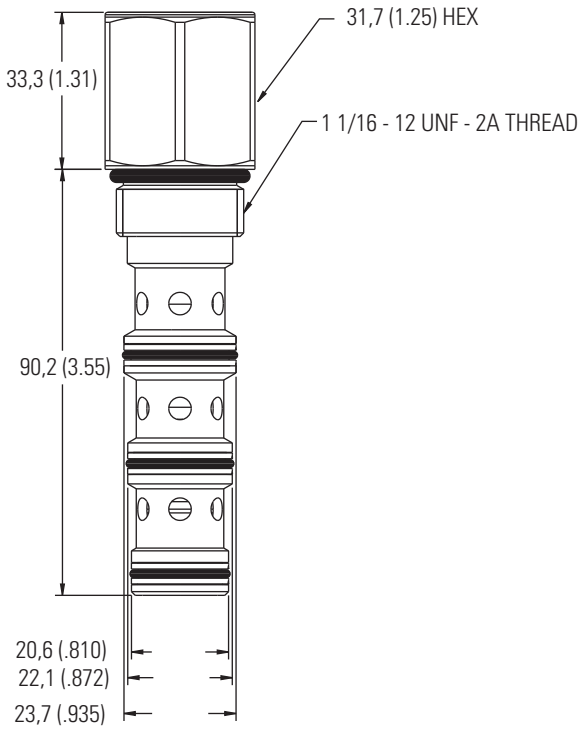

H

Where measurements are critical request certified drawings. We reserve the right to change specifications without notice.

PCS14-12 - Pressure compensator

Bypass or priority
58 L/min (15 USgpm) • 350 bar (5000 psi)

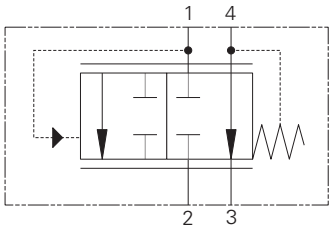

Operation

This valve, when used with either a fixed or variable orifice on port 4, maintains a constant flow out of port 3, regardless of pressure changes downstream of port 3. This is based on whatever pressure differential is chosen. All flow in excess of the priority requirement is bypassed from port 1 to port 2. If the priority port is deadheaded, the valve will try to direct flow out of the priority port and shut off the bypass flow, blocking of all flow.

Features

Hardened and ground and honed working components. Cartridge construction for maximum mounting flexibility. Working pressure 350 bar.

Sectional view

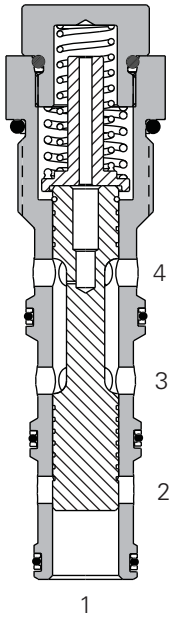

Performance data

Ratings and specifications

Performance data is typical with fluid at 21,8 cSt (105 SUS) and 49°C (120°F)	
Typical application pressure (all ports)	350 bar (5000 psi)
Cartridge fatigue pressure (infinite life)	350 bar (5000 psi)
Rated flow	58 L/min (15 USgpm)
Cavity	C-12-4
Standard housing materials	Customized housings are necessary for close-coupling, the compensator and orifice
Temperature range	-40° to 120°C (-40° to 248°F)
Fluids	All general purpose hydraulic fluids such as: MIL-H-5606, SAE 10, SAE 20, etc.
Filtration	Cleanliness code 18/**16/13**
Weight cartridge only	0,36 kg (0.80 lbs)
Seal kit	9900335-000 (Buna-N) 9900336-000 (Viton®)

Viton is a registered trademark of E.I. DuPont

Description

This is a high pressure priority style compensator suitable for use with a separate needle valve or orifice to provide a priority pressure compensated flow. This when used in a manifold is ideal for motor or cylinder control where priority is required.

Performance characteristics

Cartridge only

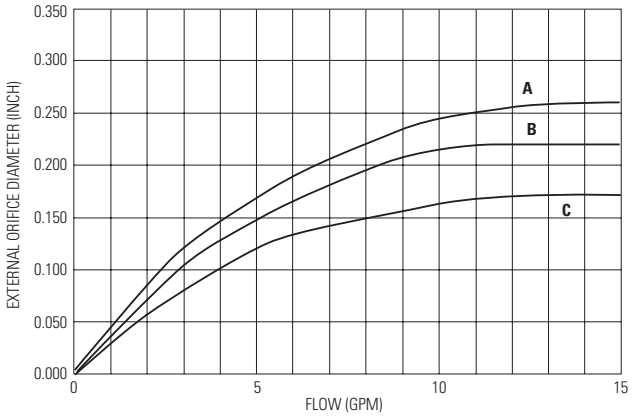

A - 2,8 bar (40 psi) (control Δ P)
B - 5,5 bar (80 psi) (control Δ P)
C - 11,0 bar (160 psi) (control Δ P)

Where measurements are critical request certified drawings. We reserve the right to change specifications without notice.

PCS14-12 - Pressure compensator

Bypass or priority
58 L/min (15 USgpm) • 350 bar (5000 psi)

Model code

PCS14 – 12 (V) – * – * – 00**

1 2 3 4 5 6

1 Function
PCS14 - Pressure compensator bypass type

2 Size
12 - 12 Size

3 Seals
Blank - Buna-N
V - Viton®

4 Port size
0 - Cartridge only
(Customized housings are necessary for close-coupling, compensator and orifice)

5 Pressure differential (Nominal)
40 - 2,8 bar (40 psi)
80 - 5,5 bar (80 psi)
120 - 8,3 bar (120 psi)
160 - 11,0 bar (160 psi)

6 Special features
00 - None
(Only required if valve has special features, omitted if "00.")

Dimensions

mm (inch)

Torque into aluminum housing to 81-95 Nm (60-70 ft. lbs)

Torque into steel housing to 102-115 Nm (75-85 ft. lbs)

Cartridge only
Basic code
PCS14-12

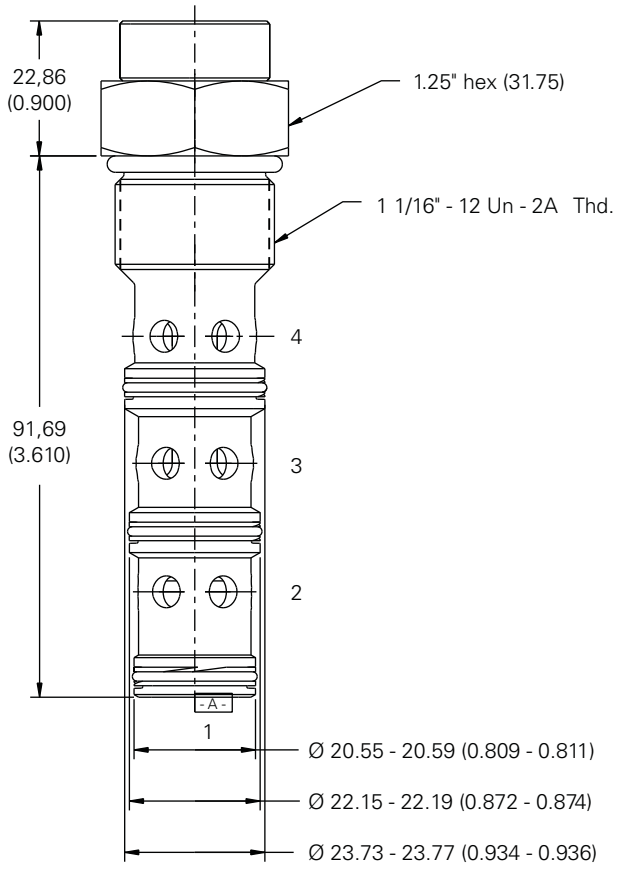

⚠ Warning
Aluminum housings can be used for pressures up to 210 bar (3000 psi). Steel housings **must** be used for operating pressures **above** 210 bar (3000 psi).

H

Where measurements are critical request certified drawings. We reserve the right to change specifications without notice.

PCS4-16 - Pressure compensator

Bypass or priority
114 L/min (30 USgpm) • 210 bar (3000 psi)

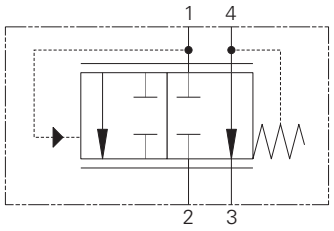

Operation

This valve, when used with either a fixed or variable orifice on port 4, maintains a constant flow out of port 3, regardless of pressure changes downstream of port 3. This is based on whatever pressure differential is chosen. All flow in excess of the priority requirement is bypassed from port 1 to port 2. If the priority port is deadheaded, the valve will try to direct flow out of the priority port and shut off the bypass flow, blocking of all flow.

Features

Hardened and ground and honed working components. Cartridge construction for maximum mounting flexibility.

Sectional view

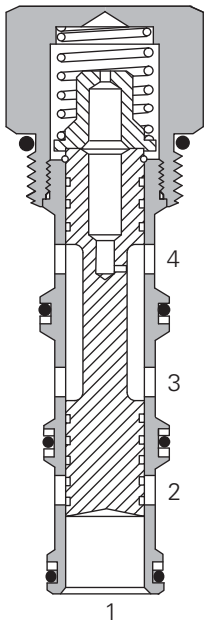

Performance data

Ratings and specifications

Performance data is typical with fluid at 21,8 cSt (105 SUS) and 49° C (120° F)	
Typical application pressure (all ports)	210 bar (3000 psi)
Cartridge fatigue pressure (infinite life)	210 bar (3000 psi)
Rated flow	114 L/min (30 USgpm)
Cavity	C-16-4
Standard housing materials	Customized housings are necessary for close-coupling, the compensator and orifice
Temperature range	-40° to 120° C (-40° to 248° F)
Fluids	All general purpose hydraulics fluids such as: MIL-H-5606, SAE 10, SAE 20 etc
Filtration	Cleanliness code 18/**16/13**
Weight cartridge only	0,50 kg (1.12 lbs)
Seal kit	889660 (Buna-N), 02-175435 (Viton®)

Viton is a registered trademark of E.I. DuPont

Description

This is a priority style compensator suitable for use with a separate needle valve or orifice to provide a priority pressure compensated flow. This when used in a manifold is ideal for motor or cylinder control where priority is required.

Performance characteristics

Cartridge only

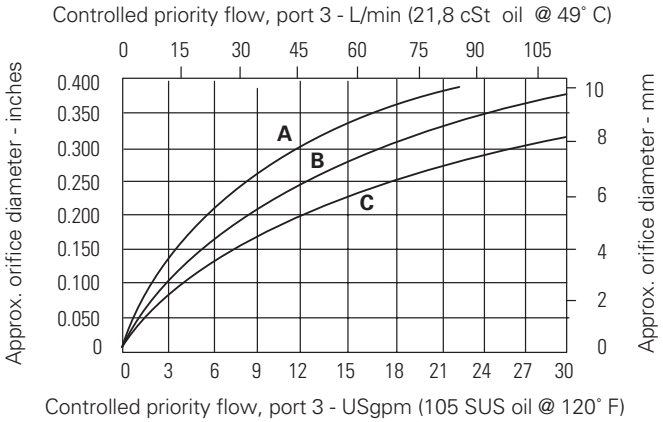

A - 2,8 bar (40 psi) (control ΔP)
B - 5,5 bar (80 psi) (control ΔP)
C - 11,0 bar (160 psi) (control ΔP)

Where measurements are critical request certified drawings. We reserve the right to change specifications without notice.

PCS4-16 - Pressure compensator

Bypass or priority
114 L/min (30 USgpm) • 210 bar (3000 psi)

Model code

PCS4 – 16 (V) – * – * – 00**

1 2 3 4 5 6

1 Function
PCS4 - Pressure compensator restrictive type

2 Size
16 - 16 size

3 Seal material
Blank - Buna-N
V - Viton®

4 Port size
0 - Cartridge only
(Customized housings are necessary for close-coupling, compensator and orifice)

5 Pressure differential (Nominal)
40 - 2,8 bar (40 psi)
80 - 5,5 bar (80 psi)
160 - 11,0 bar (160 psi)

6 Special features
00 - None
(Only required if valve has special features, omit if "00".)

Dimensions

mm (inch)

Cartridge only
Basic code
PCS4-16

Torque into aluminum housing to 108-122 Nm (80-90 ft lbs)

Torque into steel housing to 136-149 Nm (100-110 ft lbs)

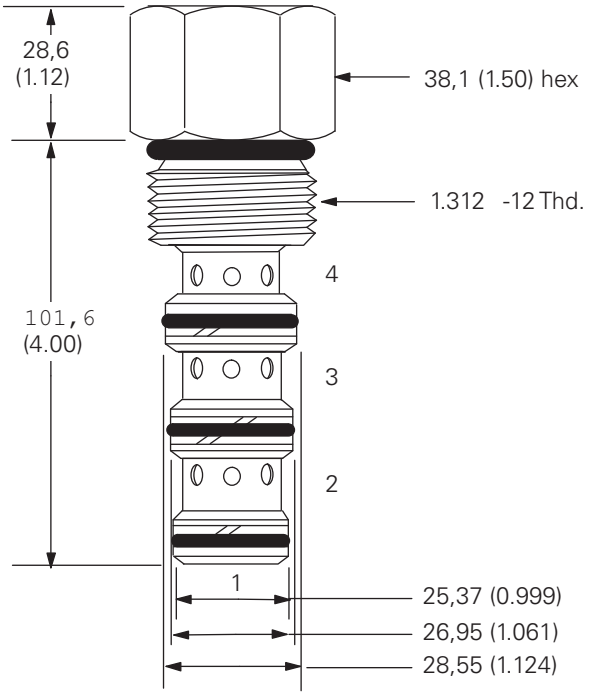

H

Where measurements are critical request certified drawings. We reserve the right to change specifications without notice.

PCS14-16 - Pressure compensator

Bypass or priority
114 L/min (30 USgpm) • 350 bar (5000 psi)

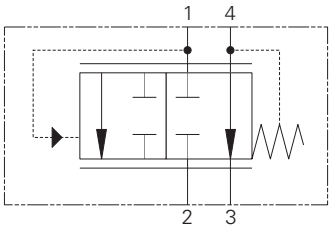

Operation

This valve, when used with either a fixed or variable orifice on port 4, maintains a constant flow out of port 3, regardless of pressure changes downstream of port 3. This is based on whatever pressure differential is chosen. All flow in excess of the priority requirement is bypassed from port 1 to port 2. If the priority port is deadheaded, the valve will try to direct flow out of the priority port and shut off the bypass flow, blocking of all flow.

Features

Hardened and ground and honed working components. Cartridge construction for maximum mounting flexibility. Working pressure 350 bar (5000 psi).

Sectional view

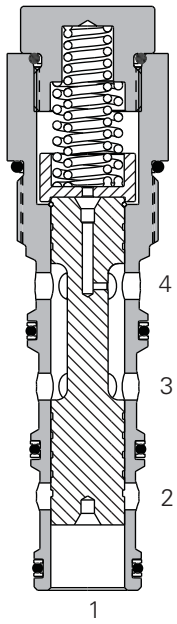

Description

This is a high pressure priority style compensator suitable for use with a separate needle valve or orifice to provide a priority pressure compensated flow. This when used in a manifold is ideal for motor or cylinder control where priority is required.

Performance data

Ratings and specifications

Performance data is typical with fluid at 21,8 cSt (105 SUS) and 49°C (120°F)	
Typical application pressure (all ports)	350 bar (5000 psi)
Cartridge fatigue pressure (infinite life)	350 bar (5000 psi)
Rated flow	114 L/min (30 USgpm)
Cavity	C-16-4
Standard housing materials	Customized housings are necessary for close-coupling, the compensator and orifice
Temperature range	-40° to 120°C (-40° to 248°F)
Fluids	All general purpose hydraulic fluids such as MIL-H-5606, SAE 10, SAE 20, etc.
Filtration	Cleanliness code 18/**16/13**
Weight cartridge only	0,50 kg (1.12 lbs)
Seal kit	889660 (Buna-N) 02-175435 (Viton®)

Viton is a registered trademark of E.I. DuPont

Performance characteristics

Cartridge only

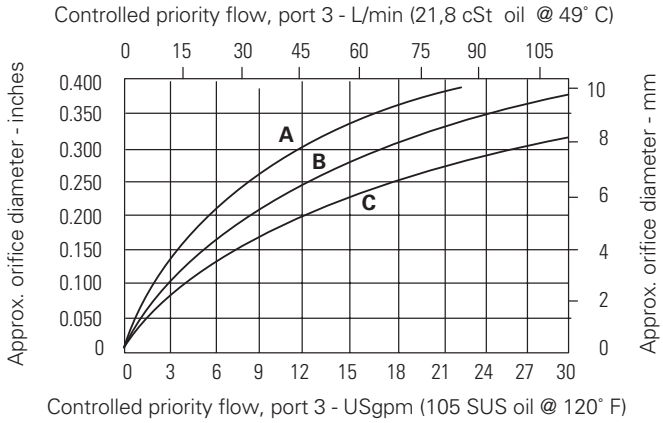

A - 2,8 bar (40 psi) (control Δ P)
B - 5,5 bar (80 psi) (control Δ P)
C - 11,0 bar (160 psi) (control Δ P)

Where measurements are critical request certified drawings. We reserve the right to change specifications without notice.

PCS14-16 - Pressure compensator

Bypass or priority
114 L/min (30 USgpm) • 350 bar (5000 psi)

Model code

PCS14 – 16 (V) – * – * – 00**

1 2 3 4 5 6

1 Function
PCS14 - Pressure compensator bypass type

2 Size
16 - 16 Size

3 Seals
Blank - Buna-N
V - Viton®

4 Port size
0 - Cartridge only
(Customized housings are necessary for close-coupling, compensator and orifice)

5 Pressure differential (Nominal)
40 - 2,8 bar (40 psi)
80 - 5,5 bar (80 psi)
160 - 11,0 bar (160 psi)

6 Special features
00 - None
(Only required if valve has special features, omitted if "00.")

Dimensions

mm (inch)

Cartridge only
Basic code
PCS14-16

Torque into aluminum housing to 108-122 Nm (80-90 ft. lbs)

Torque into steel housing to 136-149 Nm (100-110 ft. lbs)

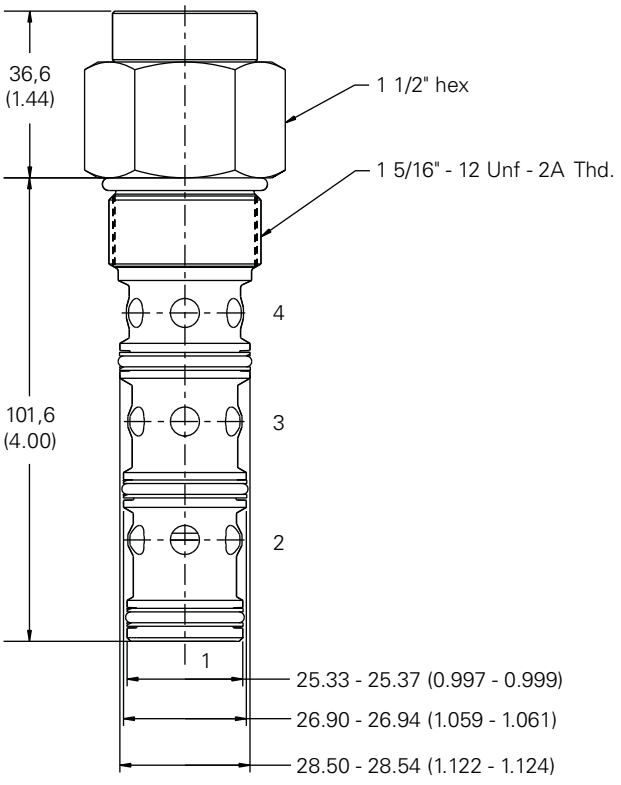

⚠ Warning
Aluminum housings can be used for pressures up to 210 bar (3000 psi). Steel housings **must** be used for operating pressures **above** 210 bar (3000 psi).

Where measurements are critical request certified drawings. We reserve the right to change specifications without notice.

PCS4-20 - Pressure compensator

Bypass or priority
189 L/min (50 USgpm) • 210 bar (3000 psi)

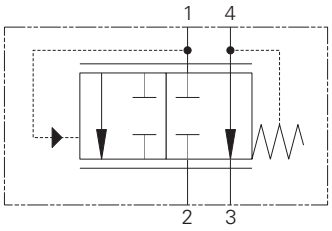

Operation

This valve, when used with either a fixed or variable orifice on port 4, maintains a constant flow out of port 3, regardless of pressure changes downstream of port 3. This is based on whatever pressure differential is chosen.

All flow in excess of the priority requirement is bypassed from port 1 to port 2. If the priority port is deadheaded, the valve will try to direct flow out of the priority port and shut off the bypass flow, blocking of all flow.

Features

Hardened and ground and honed working components. Cartridge construction for maximum mounting flexibility.

Sectional view

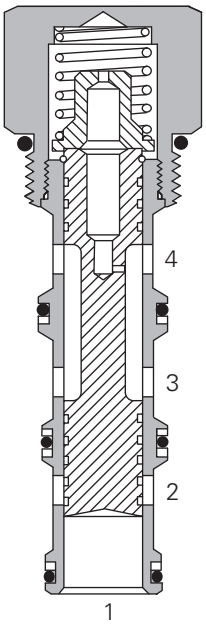

Performance data

Ratings and specifications

Performance data is typical with fluid at 21,8 cSt (105 SUS) and 49° C (120° F)	
Typical application pressure (all ports)	210 bar (3000 psi)
Cartridge fatigue pressure (infinite life)	210 bar (3000 psi)
Rated flow	189 L/min (50 USgpm)
Cavity	C-20-4
Standard housing materials	Customized housings are necessary for close-coupling, the compensator and orifice
Temperature range	-40° to 120° C (-40° to 248° F)
Fluids	All general purpose hydraulics fluids such as: MIL-H-5606, SAE 10, SAE 20 etc
Filtration	Cleanliness code 18/**16/13**
Weight cartridge only	0,50 kg (1.12 lbs)
Seal	kit 889660 (Buna-N) 02-175435 (Viton®)

Viton is a registered trademark of E.I. DuPont

Descriptions

This is a priority style compensator suitable for use with a separate needle valve or orifice to provide a priority pressure compensated flow. This when used in a manifold is ideal for motor or cylinder control where priority is required.

Performance characteristics

Cartridge only

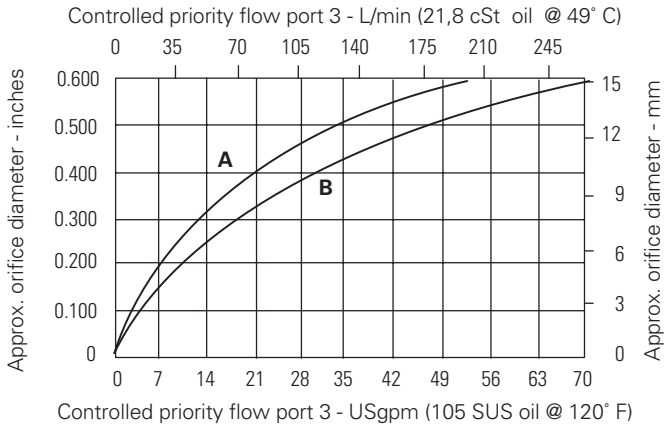

A - 2,8 bar (40 psi) (control ΔP)
B - 5,5 bar (80 psi) (control ΔP)

Where measurements are critical request certified drawings. We reserve the right to change specifications without notice.

PCS4-20 - Pressure compensator

Bypass or priority
189 L/min (50 USgpm) • 210 bar (3000 psi)

Model code

PCS4 – 20 (V) – * – * – 00**

1 2 3 4 5 6

1 Function
PCS4 - Pressure compensator bypass type

2 Size
20 - 20 size

3 Seal material
Blank - Buna-N
V - Viton®

4 Port size
0 - Cartridge only
(Customized housings are necessary for close-coupling, compensator and orifice)

5 Pressure differential (Nominal)
40 - 2,8 bar (40 psi)
80 - 5,5 bar (80 psi)

6 Special features
00 - None
(Only required if valve has special features, omit if "00".)

Dimensions

mm (inch)

Cartridge only
Basic code
PCS4-20

Torque into aluminum housing to 128-155 Nm (95-115 ft lbs)

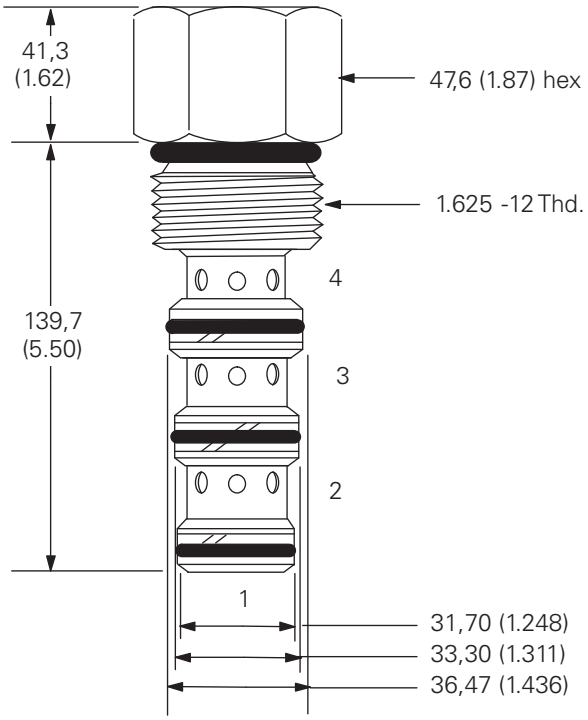

H

Where measurements are critical request certified drawings. We reserve the right to change specifications without notice.

2FPH - Flow regulator

Pressure compensated regulator/diverter, priority style. solenoid switch
Up to 160 L/min (42 USgpm) • 350 bar (5000 psi)

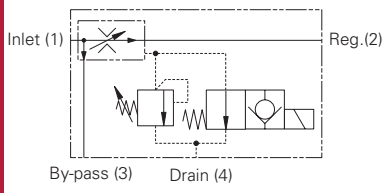

Operation

Inlet flow passes through the adjustable orifice and the radial holes in the spool/sleeve assembly then out of the regulated port. The pressure drop across the orifice is sensed at each end of the spool, producing a force which, at the required flow rate, overcomes the spring force. The resultant movement of the spool regulates the flow by opening the radial valve ports to the bypass port and closing the regulated flow ports. The solenoid valve vents the spring chamber to a drain line and in its NORMAL (de-energized) mode all inlet flow is diverted to the bypass port. The pre-set regulated flow is selected by energizing the solenoid. The adjustable relief valve vents the spring chamber at the pre-set pressure and diverts the flow to the bypass port. It may be necessary to fit a 10 bar check valve in the bypass or regulated line to ensure the valve switches fully.

Features

Line body construction with three ports allows direct connection into hydraulic systems. Leakproof adjust screw gives easy, accurate adjustment to required flow setting. Remote functional selection with solenoid operation. Adjustable relief valve gives system protection. Hardened and ground working parts give accurate flow control and long working life.

Sectional view

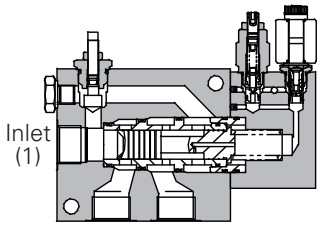

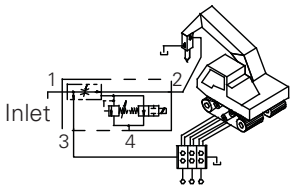

Performance data

Ratings and specifications

Figures based on oil temperature of 40° C and of 32 cSt (150 SUS)

Rated flow	*Inlet*	2FPH55	95 L/min (25 USgpm)
		2FPH95	150 L/min (40 USgpm)
		2FPH195	380 L/min (100 USgpm)
	Regulated	2FPH55	55 L/min (14 USgpm)
		2FPH95	95 L/min (25 USgpm)
		2FPH195	160 L/min (42 USgpm)
Maximum pressure	2FPH55		280 bar (4000 psi)
	2FPH95/2FPH195		350 bar (5000 psi)
Material			All working parts hardened & ground steel
Standard housing material	2FPH55		Aluminum (up to 210 bar)
	2FPH95/2FPH195		Steel
Mounting position			Line mounted
Weight	2FPH55		3.00 Kg (6.60 lbs)
	2FPH95		3.50 Kg (7.70 lbs)
	2FPH195		12.26 Kg (27.00 lbs)
Seal kit number	2FPH55		SK267 (Nitrile) SK267V (Vition)
	2FPH95		SK547 (Nitrile) SK547V (Viton)
	2FPH195		SK258 (Nitrile) SK258V (Viton)
Recommended filtration level			BS5540/4 Class 18/13 (25 micron nominal)
Operating temperature			–30° to +90°C (–22° to +194°F)
Nominal range			5 to 500 cSt

Viton is a registered trademark of E.I. DuPont

Description

The 2FPH series of priority flow regulator valves gives full control of regulated flow plus remote selection of priority flow and adjustable pressure limitation of the regulated line.

Pressure drop

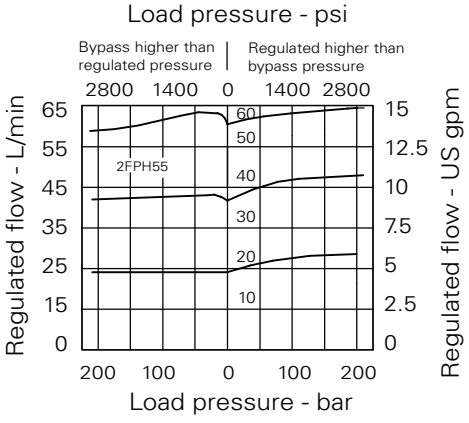

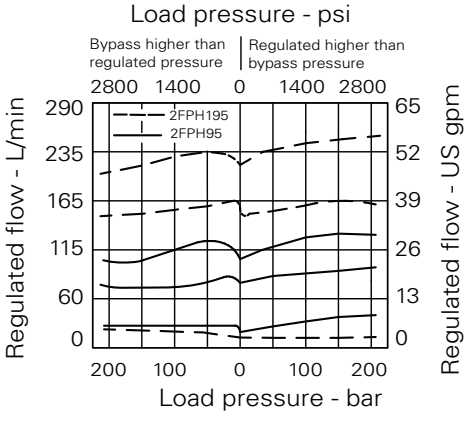

Where measurements are critical request certified drawings. We reserve the right to change specifications without notice.

2FPH - Flow regulator

Pressure compensated regulator/diverter, priority style. solenoid switch
Up to 160 L/min (42 USgpm) • 350 bar (5000 psi)

Model code

2FPH ** – **P** **6W** – **95** – **S** **H** **24**

1 2 3 4 5 6 7

1 Basic code
2FPH55 - Complete valve
2FPH95 - Complete valve
2FPH195 - Complete valve

2 Adjustment means
P - Leakproof screw adjustment
R - Handknob adjustment (See page H-6 for dimensions)

3 Port size - bodied valves only
4W - 1/2" BSP
6W - 3/4" BSP
8W - 1" BSP
8T - 1/2" SAE
12T - 3/4" SAE
16T - 1" SAE

4 Adjustable flow range
2FPH55 - 0-55 liters/min
2FPH95 - 0-95 liters/min
2FPH195 - 0-195 liters/min

5 Seals
S - Nitrile (for use with most industrial hydraulic oils)
SV - Viton (for high temperature & most special fluid applications)

6 Coil termination
H - ISO 4400 (plug included)
F - Flying leads, DC only
DM - Deutsch moulded
Other terminations available on request

7 Voltage
12 - 12 VDC
24 - 24 VDC
Other options available on request

Code	Port size	A	B	C	D	E	F	G	H	K	L	M	N	O	P	Std R/V
2FPH55	1/2"	168	51	76	127	44.5	82.5	-	32	28.5	8.5	10	95	Ø8.5	SX203	280 bar
2FPH95	3/4"	232	63.5	76	127	58	102	58	39.5	32	10	10	136	Ø10.5	S207	200 bar
2FPH195	1"	227.5	63.5	133	168	47	104	108	32	67	13	13	127	Ø13.5	S207	280 bar

Dimensions

mm (inch)

Note: For applications above 210 bar please consult our technical department or use the steel body option

Complete valve
Basic code
2FPH

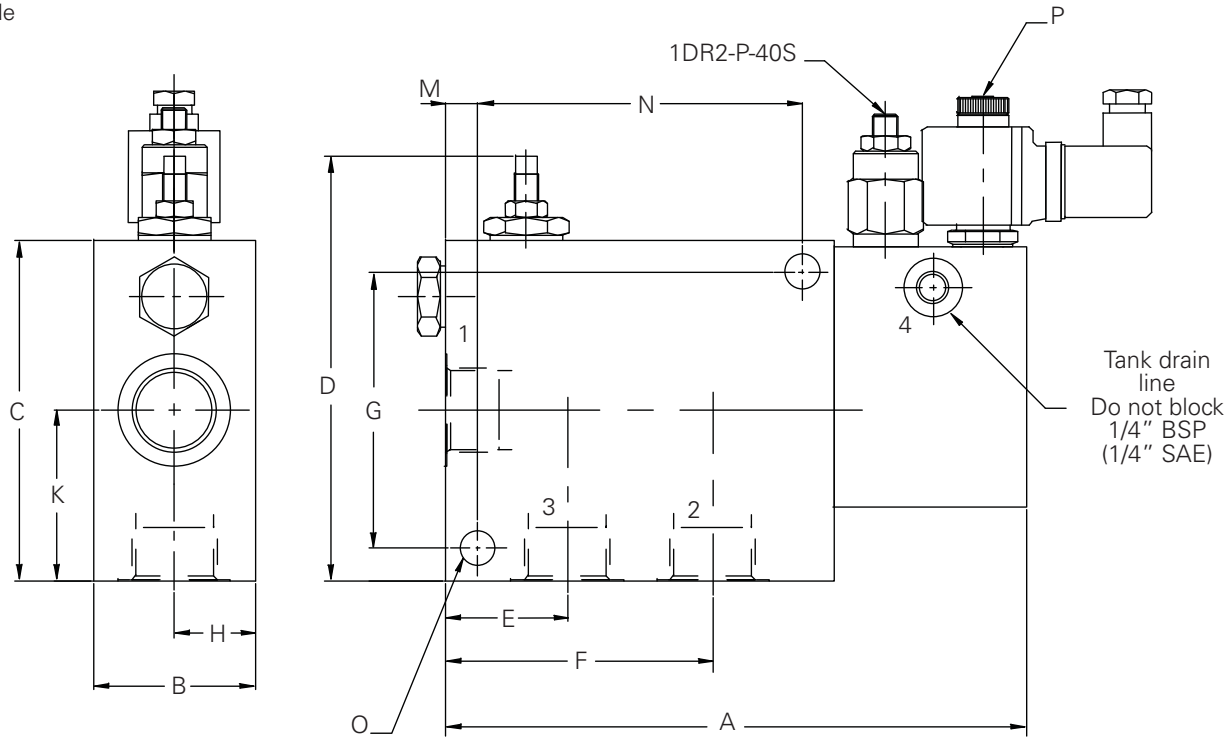

Where measurements are critical request certified drawings. We reserve the right to change specifications without notice.

2FPH - Flow regulator

Pressure compensated regulator/diverter, priority style. solenoid switch
350 L/min (92 USgpm) • 350 bar (5000 psi)

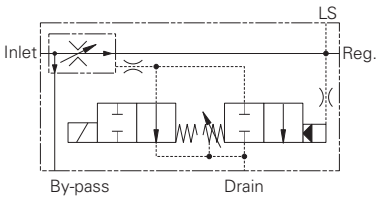

Operation

Inlet flow passes through the adjustable orifice and the radial holes in the spool/sleeve assembly then out of the regulated port. The pressure drop across the orifice is sensed at each end of the spool, producing a force which, at the required flow rate, overcomes the spring force. The resultant movement of the spool regulates the flow by opening more radial holes to the bypass port. The solenoid valve vents the spring chamber to a drain line and in its de-energized mode all inlet flow is diverted to the bypass port. The pre-set regulated flow is selected by energizing the solenoid. The adjustable pilot valve vents the spring chamber when the regulated line reaches the preset pressure, diverting the flow to the bypass port where the pressure can continue to rise if necessary. It may be necessary to fit a 10 bar check valve in the bypass or regulated line to ensure the valve switches fully.

Features

Line body construction with three ports allows direct connection into hydraulic systems. Leakproof adjust screw gives easy, accurate adjustment to required flow setting. Remote functional selection with solenoid operation. Adjustable relief valve gives system protection whilst allowing bypass pressure to rise above setting if required. Hardened and ground working parts give accurate flow control and long working life.

Performance data

Ratings and specifications

Figures based on oil temperature of 40˚ C and of 32 cSt (150 SUS)

Rated flow	*Inlet*	**2FPH250**	350 L/min (92 USgpm)
		2FPH350	450 L/min (120 USgpm)
	Regulated	**2FPH250**	200 L/min (52 USgpm)
		2FPH350	350 L/min (92 USgpm)
Maximum pressure			350 bar (5000 psi)
Material			All working parts hardened & ground steel
Standard housing material			Steel, zinc plated and passivated
Mounting position			Line mounted
Weight		**2FPH250**	17 kg (37.4 lbs)
		2FPH350	28 kg (61.0 lbs)
Seal kit number	**2FPH250**		SK819 (Nitrile), SK819V (Viton®)
	2FPH350		SK820 (Nitrile), SK820V (Viton®)
Recommended filtration level	**BS5540/4**		Class 18/13 (25 micron nominal)
Operating temperature			-30° to +90° C (–22° to +194° F)
Nominal range			5 to 500 cSt

Viton is a registered trademark of E.I. DuPont

Description

The 2FPH series of priority flow regulator valves gives full control of regulated flow plus remote selection of priority flow and adjustable pressure limitation of the regulated line.

Pressure drop

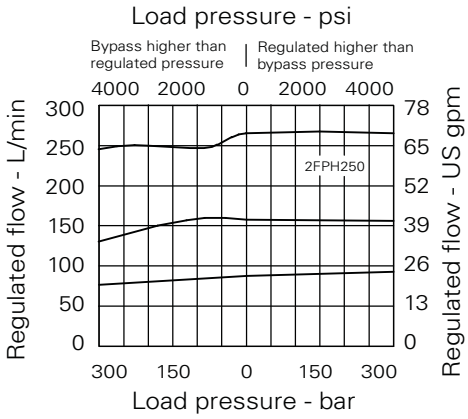

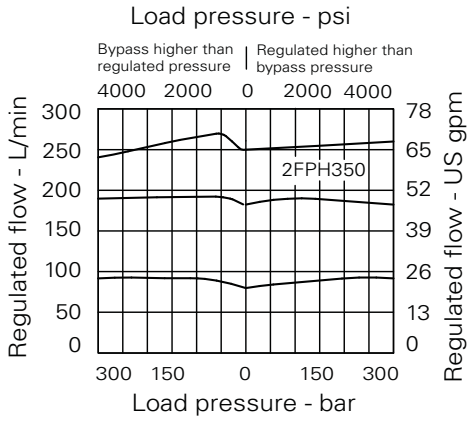

Where measurements are critical request certified drawings. We reserve the right to change specifications without notice.

2FPH - Flow regulator

Pressure compensated regulator/diverter, priority style. solenoid switch
350 L/min (92 USgpm) • 350 bar (5000 psi)

Model code

2FPH* – P 8W – 250 S H 24**

1 2 3 4 5 6 7

1 Basic code
2FPH250 - Complete valve
2FPH350 - Complete valve

2 Adjustment means
PR

3 Port size - bodied valves only
8W - 1" BSP
12W - 1 1/2" BSP
16T - 1" SAE
24T - 1 1/2" SAE

4 Adjustable flow range
250 - 0-250 L/min (2FPH250)
350 - 0-350 L/min (2FPH350)

5 Seals
S - Nitrile (for use with most industrial hydraulic oils)
SV - Viton (for high temperature & most special fluid applications)

6 Coil termination
H - ISO 4400 (plug included)
F - Flying leads, DC only
DM - Deutsch moulded other terminations available on request

7 Voltage
12 - 12 VDC
24 - 24 VDC
Other options available on request

Basic code	port size	A	B	C	D	E	F	G	H	K	L	M	N	O	P	O	R	S	Std R/V
2FPH250	1"	177	63.5	177.8	75	70	31.75	143	47.5	105	15	62	110	95	63	13.5	-	-	280 bar
2FPH350	1-1/2"	269	76.2	177.8	75	70	38.1	100	89	164	5	62	15	100	39	18	90	50	200 bar

Dimensions

mm (inch)

Complete Valve
Basic code
2FPH

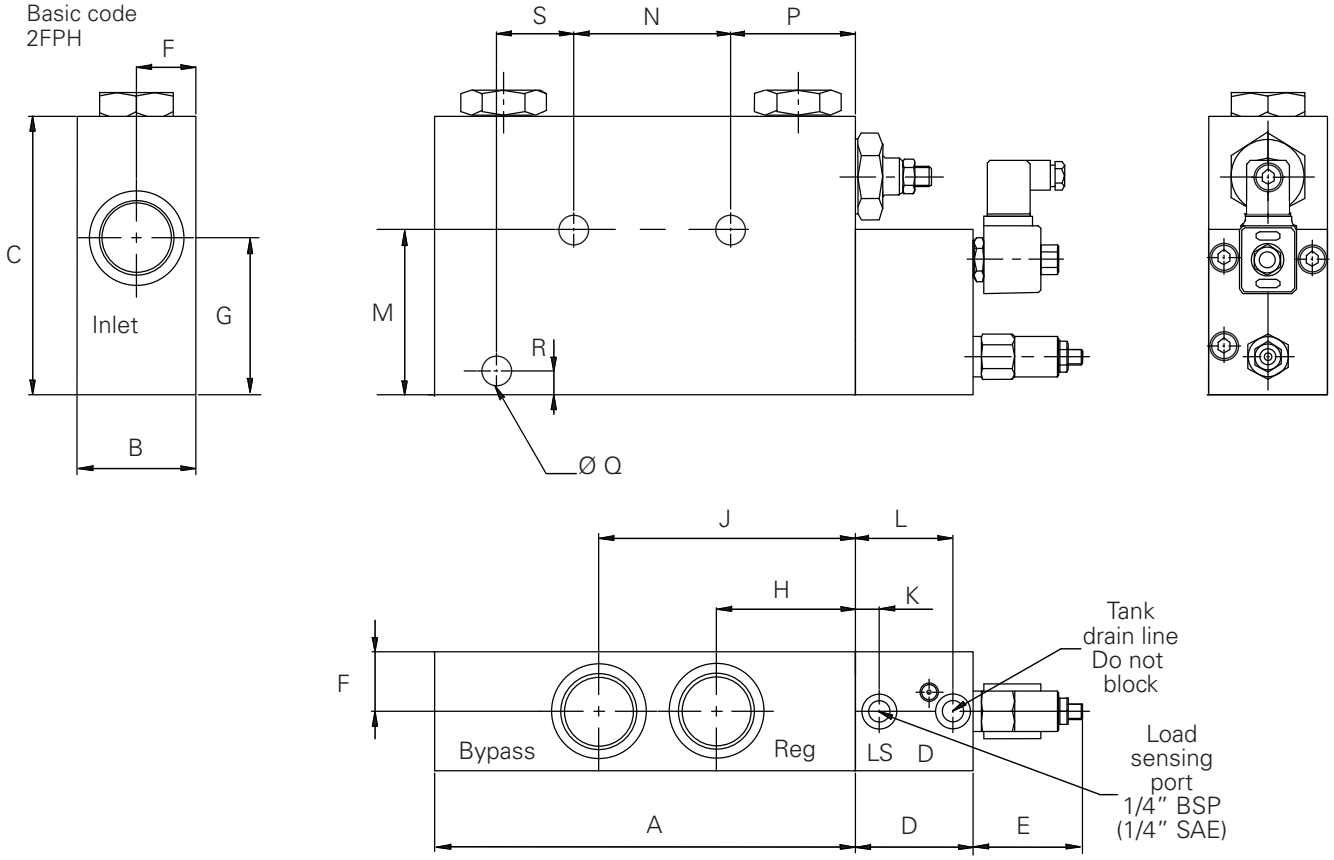

Where measurements are critical request certified drawings. We reserve the right to change specifications without notice.

VF11-10 - Velocity fuse

23 L/min (6 USgpm) • 350 bar (5000 psi)

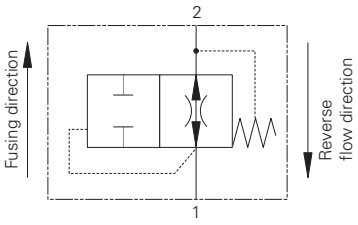

Operation

This valve is normally open from port 1 to port 2. When flow exceeds the setting of the valve, it closes. The valve returns to the open condition when the pressure at port 1 is reduced to less than 80 psi.

Features

Hardened and ground and honed working components. Cartridge construction for maximum mounting flexibility.

Sectional view

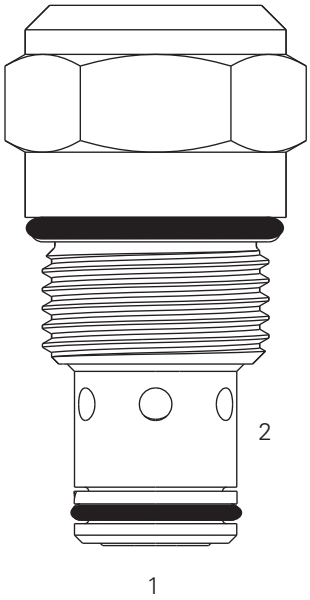

Note: The valve is not intended for use in pump unloading applications

Description

This is a screw in cartridge velocity fuse used to lock a cylinder or motor in place in the case of a complete hose failure.

Performance data

Ratings and specifications

Performance data is typical with fluid at 21,8 cST (105 SUS) and 49°C (120°F)		
Typical application pressure (all ports)	VF11	350 bar (5000 psi)
Cartridge fatigue pressure (infinite life)	VF11	350 bar (5000 psi)
Rated Flow		23 L/min (6 USgpm)
Flow regulation accuracy Factory set maximum flow rate accuracy under standard test conditions and within the above ranges		1,9–22,7 L/min (0.5–6.0 USgpm) ±20%
Internal leakage		Port 2 to 1; <5 drops/min, maximum @ 210 bar (3000 psi)
Temperature range		-40° to 120°C (-40° to 248°F)
Cavity		C–10–2
Fluids		All general purpose hydraulics fluids such as: MIL-H-5606, SAE 10, SAE 20, etc
Filtration		Cleanliness code 18/**16/13**
Standard housing materials		Aluminium or steel
Weight		0,11 kg (0.25 lbs)
Seal kit		565803 (Buna-N) 566086 (Viton®)

Viton is a registered trademark of E.I. DuPont

Pressure drop

Cartridge only

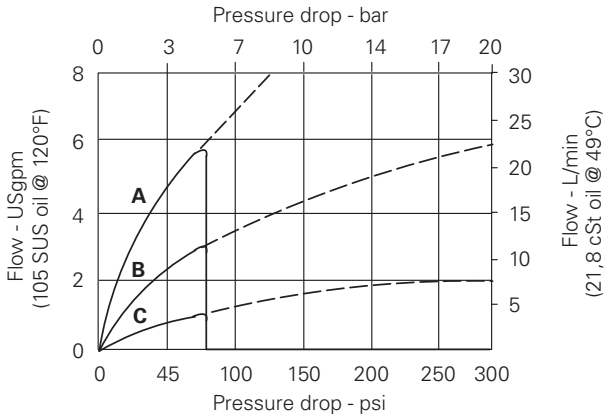

A - 22,8 L/min (6 USgpm) maximum flow setting
— Port 1 to 2, fusing direction
--- Port 2 to 1, reverse flow down to 0

B - 14,44 L/min (3 USgpm) maximum flow setting
— Port 1 to 2, fusing direction
--- Port 2 to 1, reverse flow down to 0

C - 3,8 L/min (1 USgpm) maximum flow setting
— Port 1 to 2, fusing direction
--- Port 2 to 1, reverse flow down to 0

Where measurements are critical request certified drawings. We reserve the right to change specifications without notice.

VF11-10 - Velocity fuse

23 L/min (6 USgpm) • 350 bar (5000 psi)

Model code

VF11 – 10 (V) – F – ** –*.* – 00

1 2 3 4 5 6 7

1 Function

VF11 - Velocity fuse 350 bar (5000 psi)

2 Size

10 - Size

3 Seals

N or Blank - Buna-N
V - Viton®

4 Adjustment

F - Fixed orifice

5 Port size

Code	Port size	Housing number		
		Aluminium light duty	Aluminium fatigue rated	Steel
0	Cartridge only			
(A)3B	3/8" BSPP	02–175462	–	–
(A)6T	SAE 6	566151	–	–
(A)2G	1/4" BSPP	–	876702	–
(A)3G	3/8" BSPP	–	876703	–
(A)6H	SAE 6	–	876700	–
(A)8H	SAE 8	–	876701	–
S6T	SAE 6	–	–	02-175100
S8T	SAE 8	–	–	02-175101
S2G	1/4" BSPP	–	–	02-175102
S3G	3/8" BSPP	–	–	02-175103

See section J for housing details.

6 Factory set flow rate

(Specify in USgpm) Range 1,9-22,7 L/min (0.5 - 6.0 USgpm)

7 Special features

00 - None

(Only required if valve has special features, omitted if "00".)

Dimensions

mm (inch)

Torque cartridge in housing:
A - 47-54 Nm (35-40 ft lbs)
S - 68-75 Nm (50-55 ft lbs)

Cartridge only
Basic code
VF1/11

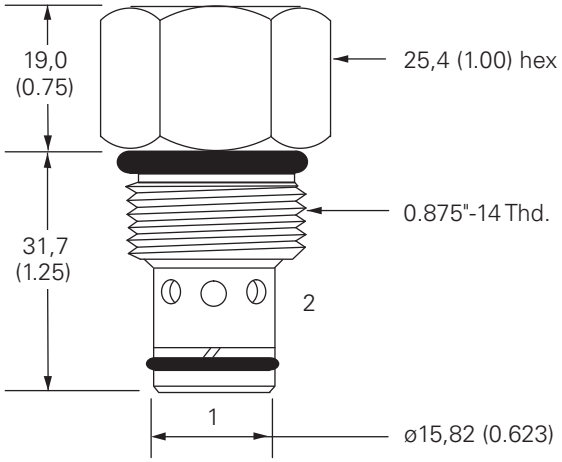

Installation drawing (Steel)

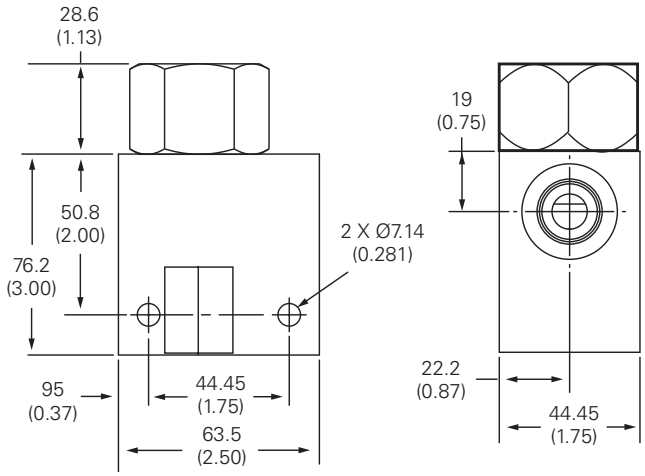

⚠ Warning

Aluminum housings can be used for pressures up to 210 bar (3000 psi). Steel housings **must** be used for operating pressures **above** 210 bar (3000 psi).

H

Where measurements are critical request certified drawings. We reserve the right to change specifications without notice.

VF1-16 - Velocity fuse

114 L/min (30 USgpm) • 210 bar (3000 psi)

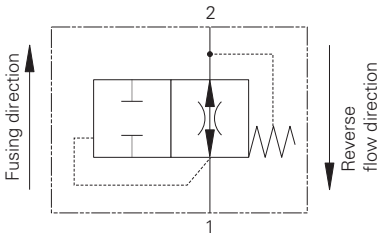

Operation

This valve is normally open from port 1 to port 2. When flow exceeds the setting of the valve, it closes. The valve returns to the open condition when the pressure at port 1 is reduced to less than 80 psi.

Features

Hardened and ground and honed working components. Cartridge construction for maximum mounting flexibility.

Sectional view

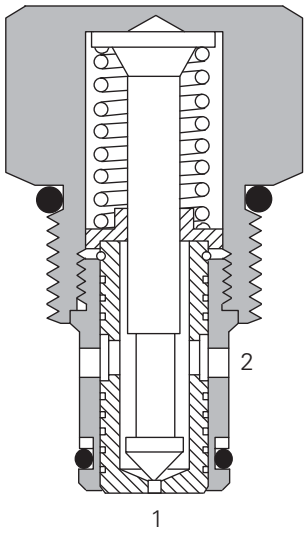

Performance data

Ratings and specifications

Performance data is typical with fluid at 21,8 cST (105 SUS) and 49°C (120°F)	
Typical application pressure (all ports)	210 bar (3000 psi)
Cartridge fatigue pressure (infinite life)	210 bar (3000 psi)
Rated flow	114 L/min (30 USgpm)
Flow regulation accuracy Factory set maximum flow rate accuracy under standard test conditions and within the above ranges	9,5–114 L/min (2.5–30.0 USgpm) ±20%
Internal leakage	Port 1 to 2 closed; <5 drops/min maximum @ 210 bar (3000 psi)
Temperature range	-40° to 120°C (-40° to 248°F)
Cavity	C–16–2
Fluids	All general purpose hydraulic fluids such as MIL–H–5606, SAE 10, SAE 20, etc.
Filtration	Cleanliness code 18/**16/13**
Standard housing materials	Aluminum
Weight cartridge only	0,33 kg (0.72 lbs)
Seal kit	565810 (Buna-N) 889609 (Viton®)

Viton is a registered trademark of E.I. DuPont

Description

This is a screw in cartridge velocity fuse used to lock a cylinder or motor in place in the case of a complete hose failure.

Note: The valve is not intended for use in pump unloading applications.

Pressure drop

Cartridge only

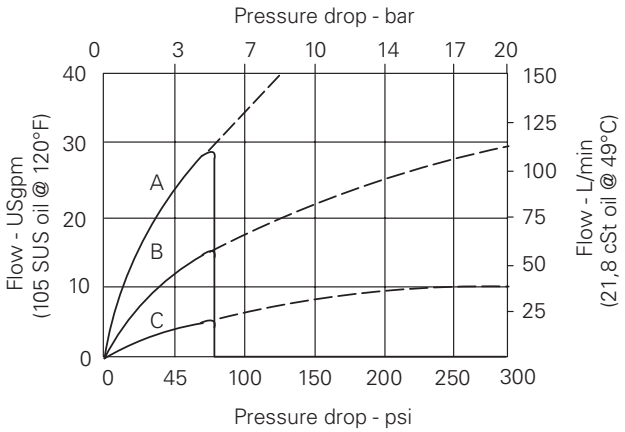

A - 114 L/min (30 USgpm) maximum flow setting
— Port 1 to 2, fusing direction
--- Port 2 to 1, reverse flow down to 0

B - 60 L/min (15 USgpm) maximum flow setting
— Port 1 to 2, fusing direction
--- Port 2 to 1, reverse flow down to 0

C - 19 L/min (5 USgpm) maximum flow setting
— Port 1 to 2, fusing direction
--- Port 2 to 1, reverse flow down to 0

Where measurements are critical request certified drawings. We reserve the right to change specifications without notice.

VF1-16 - Velocity fuse

114 L/min (30 USgpm) • 210 bar (3000 psi)

Model code

VF1 – 16 (V) – F – * – ** – 00**

1 2 3 4 5 6 7

1 Function

VF1 - Velocity fuse

2 Size

16 - 16 size

3 Seals

Blank - Buna-N
V - Viton®

4 Style

F - Factory set

5 Port size

Code	Port size	Housing number	
		Aluminium light duty	Aluminium fatigue rated
0	Cartridge only		
6B	3/4" BSPP	02–175463	–
12T	SAE 12	566149	–
4G	1/2" BSPP	–	876716
6G	3/4" BSPP	–	876718
10H	SAE 10	–	876717
12H	SAE 12	–	566113

See section J for housing details.

6 Factory set flow rate

(Specify in USgpm) Range 9,5-114 L/min ((2.5-30 USgpm)

7 Special features

00 - None

(Only required if valve has special features, omitted if "00".)

Dimensions

mm (inch)

Torque cartridge in aluminum housing to 108–122 Nm (80–90 ft lbs)

Cartridge only

Basic code
VF1-16

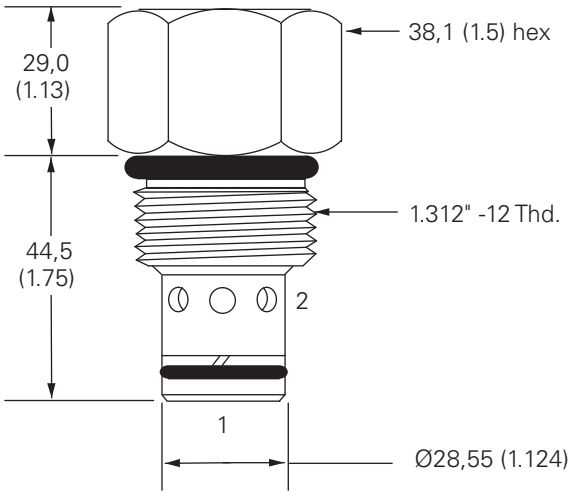

Installation drawing

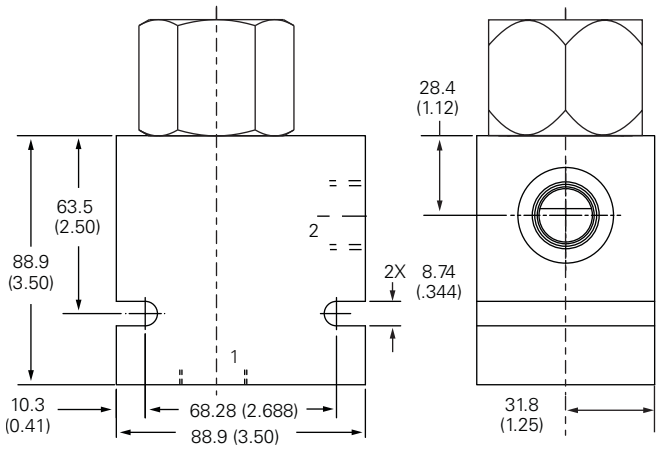

⚠ Warning

Aluminum housings can be used for pressures up to 210 bar (3000 psi). Steel housings **must** be used for operating pressures **above** 210 bar (3000 psi).

Where measurements are critical request certified drawings. We reserve the right to change specifications without notice.

FDC1-16 - Flow divider/combiner

Pressure compensated, spool type
Up to 178 L/min (47 USgpm) • 210 bar (3000 psi)

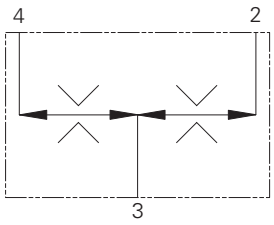

Operation

Inlet flow passes through the two matched orifices in the spools, through the spools and out of the radial holes in the sleeve. The matched orifices and the compensating springs ensure that the flow is divided equally, excess flow in either direction causes the spool to move and close the radial holes in the sleeve until equilibrium is restored. In the reverse direction the spools close together and regulate the flow in through the radial ports.

Features

One valve synchronizes in both directions. Matched spools give high accuracy under load and pressure imbalance conditions. Cartridge construction gives versatility of application. A valve may be fitted into a line body, a custom designed Hydraulic Integrated Circuit or other hydraulic equipment.

Sectional view

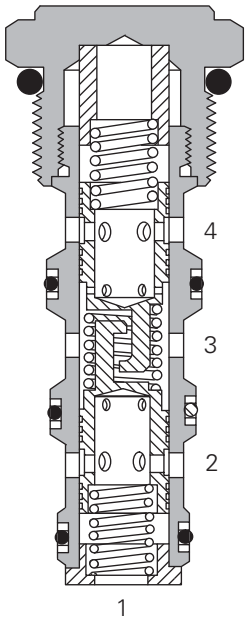

Performance data

Ratings and specifications

Performance data is typical with fluid at 21,8 cST (105 SUS) and 49°C (120°F)	
Typical application pressure (all ports)	210 bar (3000 psi)
Cartridge fatigue pressure (infinite life)	210 bar (3000 psi)
Rated inlet flow	See model code
Temperature range	-40° to 120° C (-40° to 248° F)
Cavity	C–16–4
Fluids	All general purpose hydraulic fluids such as MIL–H–5606, SAE 10, SAE 20, etc.
Filtration	Cleanliness code 18/**16/13**
Standard housing materials	Aluminum
Weight cartridge only	0,35 kg (0.78 lbs)
Seal Kits	889634 (Buna–N) 889638 (Viton®)

Viton is a registered trademark of E.I. DuPont

Description

This range of flow divider/combiner valves gives division of input flow into two equal parts and re-combination of flow in the reverse direction. Pressure compensation ensures that whether dividing or combining, equal flow is maintained over a wide range of pressure variation. A typical use of these valves is to divide a pump flow to operate two actuators (which may be under different load conditions and at different pressures) and to re-combine the return flows to synchronize actuator movement. Flow variation is within ±10% with the maximum variation of pressure and inlet flow and under normal conditions will be significantly less.

Pressure drop

Cartridge only

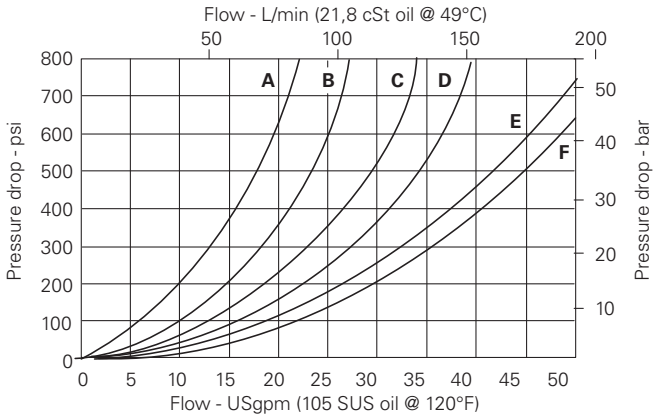

Flow division

(See model code position 5)

A - 2* spool
B - 3* spool
C - 4* spool
D - 5* spool
E - 6* spool
F - 8* spool

Where measurements are critical request certified drawings. We reserve the right to change specifications without notice.

FDC1-16 - Flow divider/combiner

Pressure compensated, spool type
Up to 178 L/min (47 USgpm) • 210 bar (3000 psi)

Model code

FDC1 – 16 (V) – * – ** – 00**

1 2 3 4 5 6

1 Function

FDC1 - Flow divider/combiner

2 Size

16 - 16 size

3 Seals

Blank - Buna-N
V - Viton®

4 Port size

Code	Port size	Housing number
		Aluminium light duty
0	Cartridge only	
12T	SAE 12	566200
6B	3/4" BSPP	02-175468

See section J for housing details.

5 Flow divisions (Ratios)

Code	Flow division %		Rated inlet flow	
	Port 4	Port 2	L/min	(USgpm)
22	50	50	045,6	(12)
28	20	80	114,0	(30)
33	50	50	068,0	(18)
36	33	67	098,0	(26)
43	57	43	079,0	(21)
44	50	50	090,0	(24)
46	40	60	114,0	(30)
55	50	50	114,0	(30)
62	75	25	090,0	(24)
63	67	33	098,0	(26)
64	60	40	114,0	(30)
66	50	50	132,0	(35)
82	80	20	114,0	(30)
84	67	33	132,0	(35)
88	50	50	178,0	(47)

6 Special features

00 - None
(Only required if valve has special features, omitted if "00".)

Dimensions

mm (inch)

Torque cartridge in aluminum housing to 108–122 Nm (80–90 ft lbs)

Cartridge only
Basic code
FDC1-16

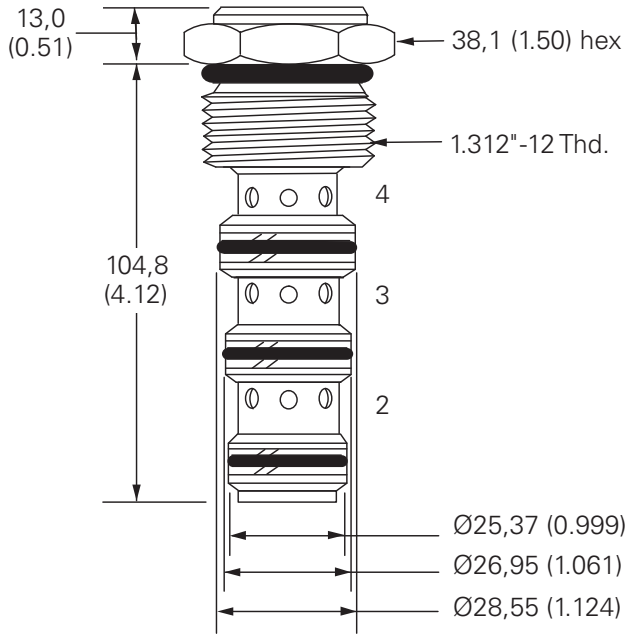

Notes: Port 1, unused, blocked by blind cavity.

Minimum inlet flow should not be less than 1/4 of maximum inlet flow for a given code.

H

Where measurements are critical request certified drawings. We reserve the right to change specifications without notice.

FDC11-16 - Flow divider/combiner

Pressure compensated, spool type
Up to 140 L/min (37 USgpm) • 350 bar (5000 psi)

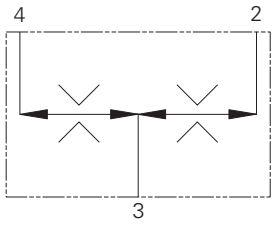

Operation

Inlet flow passes through the two matched orifices in the spools, through the spools and out of the radial holes in the sleeve. The matched orifices and the compensating springs ensure that the flow is divided equally, excess flow in either direction causes the spool to move and close the radial holes in the sleeve until equilibrium is restored. In the reverse direction the spools close together and regulate the flow in through the radial ports.

Features

One valve synchronizes in both directions. Matched spools give high accuracy under load and pressure imbalance conditions. Cartridge construction gives versatility of application. A valve may be fitted into a line body, a custom designed Hydraulic Integrated Circuit or other hydraulic equipment.

Sectional view

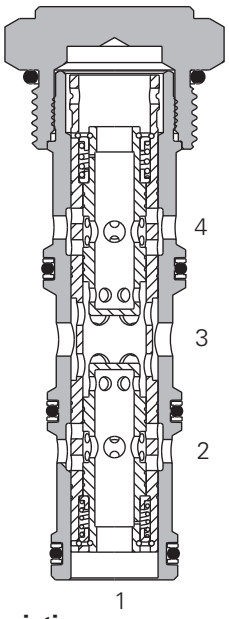

Performance data

Ratings and specifications

Performance data is typical with fluid at 21,8 cST (105 SUS) and 49°C (120°F)	
Typical application pressure (all ports)	350 bar (5000 psi)
Cartridge fatigue pressure (infinite life)	350 bar (5000 psi)
Rated inlet flow	See model code
Temperature range	-40° to 120° C (-40° to 248° F)
Cavity	C–16–4
Fluids	All general purpose hydraulic fluids such as MIL–H–5606, SAE 10, SAE 20, etc.
Filtration	Cleanliness code 18/**16/13**
Standard housing materials	Aluminum or steel
Weight cartridge only	0,35 kg (0.78 lbs)
Seal Kits	889634 (Buna–N) 889638 (Viton®)

Viton is a registered trademark of E.I. DuPont

Description

This range of flow divider/combiner valves gives division of input flow into two equal parts and re-combination of flow in the reverse direction. Pressure compensation ensures that whether dividing or combining, equal flow is maintained over a wide range of pressure variation. A typical use of these valves is to divide a pump flow to operate two actuators (which may be under different load conditions and at different pressures) and to re-combine the return flows to synchronize actuator movement. Flow variation is within ±10% with the maximum variation of pressure and inlet flow and under normal conditions will be significantly less.

Pressure drop

Cartridge only

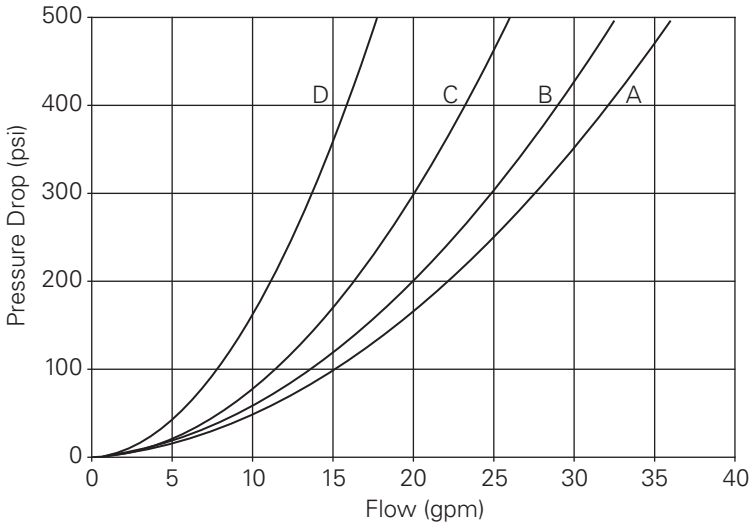

Flow division

A - 66
B - 44
C - 33
D - 22

Where measurements are critical request certified drawings. We reserve the right to change specifications without notice.

FDC11-16 - Flow divider/combiner

Pressure compensated, spool type
Up to 140 L/min (37 USgpm) • 350 bar (5000 psi)

Model code

FDC11 – 16 (V) – ** – ** – 00**

1 2 3 4 5 6

1 Function

FDC11 - Flow divider/combiner

2 Size

16 - 16 size

3 Seals

Blank - Buna-N
V - Viton®

4 Port size

Code	Port size	Housing number	
		Aluminium	Steel
A12T	SAE 12	20785*	
A6B	3/4" BSPP	02-186592*	
A4G	1/2" BSPP	30706	
A6G	3/4" BSPP	30708	
A10H	SAE 10	30707	
A12H	SAE 12	30709	
S4G	1/2" BSPP		02-175143
S6G	3/4" BSPP		02-175144
S10T	SAE 10		02-175141
S12T	SAE 12		02-175142

See section J for housing details.

5 Flow divisions (Ratios)

Code	Flow division %		Rated inlet flow	
	Port 4	Port 2	L/min	(USgpm)
66	50	50	133,0	(35)
44	50	50	114,0	(30)
33	50	50	083,6	(22)
22	50	50	057,0	(15)
64	60	40	140,6	(37)
45	40	60	140,6	(37)
62	75	25	114,0	(30)
26	25	75	114,0	(30)
42	67	33	83,6	(22)
24	33	67	83,6	(22)

6 Special features

00 - None
(Only required if valve has special features, omitted if "00".)

Dimensions

mm (inch)

Torque cartridge in aluminum housing to 108–122 Nm (80–90 ft lbs)

Cartridge only
Basic code
FDC11-16

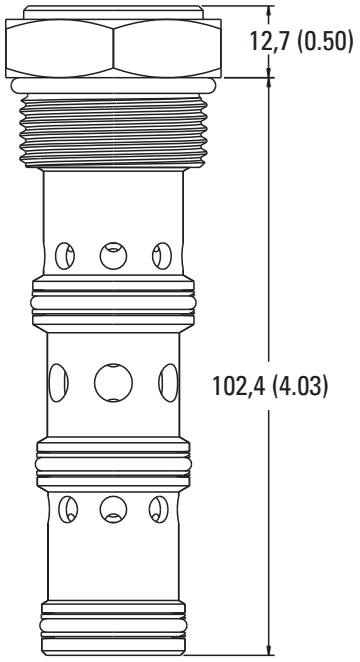

Installation drawing

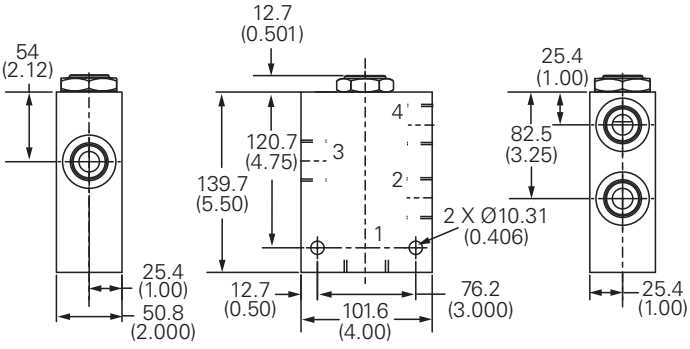

Notes: Port 1, unused, blocked by blind cavity.

Minimum inlet flow should not be less than 1/4 of maximum inlet flow for a given code.

Where measurements are critical request certified drawings. We reserve the right to change specifications without notice.

2CFD50 - Flow divider/combiner

Pressure compensated, spool type
Up to 40 L/min (10.5 USgpm) • 350 bar (5000 psi)

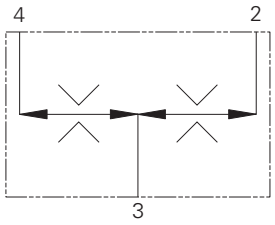

Operation

Inlet flow passes through the two matched orifices in the spools, through the spools and out of the radial holes in the sleeve. The matched orifices and the compensating springs ensure that the flow is divided equally, excess flow in either direction causes the spool to move and close the radial holes in the sleeve until equilibrium is restored. In the reverse direction the spools close together and regulate the flow in through the radial ports.

Features

One valve synchronizes in both directions. Matched spools give high accuracy under load and pressure imbalance conditions. Cartridge construction gives versatility of application. A valve may be fitted into a line body, a custom designed Hydraulic Integrated Circuit or other hydraulic equipment.

Sectional view

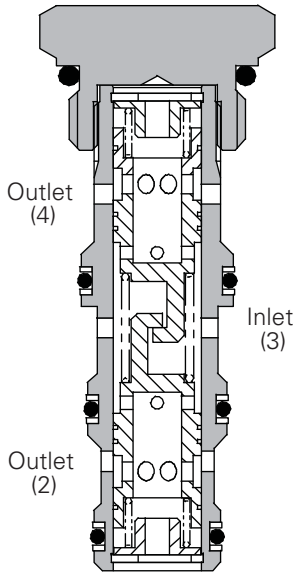

Performance data

Ratings and specifications

Figures based on oil temp at 40˚ and viscosity at 40 cSt	
Rated flow	Up to 40 L/min (10.5 USgpm)
Max pressure	350 bar (5000 psi)
Cartridge material	All working parts hardened and ground steel. Zinc plated external steel body
Body material	Standard aluminum (up to 210 bar*) add suffix "377" for steel option
Mounting position	Unrestricted
Cavity number	A12744 (See Section M)
Torque cartridge into cavity	34 Nm (25 lbs ft)
Weight	2CFD50 0.10 kg (0.23 lbs) 2CFD55 0.44 kg (0.98 lbs)
Seal kit	SK1065 (Nitrile) SK1065V (Viton®)
Recommended filtration level	Up to 40 L/min (10.5 USgpm)
Operating temp	-30˚ to +90˚C (-22˚ to +194˚F)
Nominal range	50 to 500 cSt

Viton is a registered trademark of E.I. DuPont

Description

This range of flow divider/combiner valves gives division of input flow into two equal parts and re-combination of flow in the reverse direction. Pressure compensation ensures that whether dividing or combining, equal flow is maintained over a wide range of pressure variation. A typical use of these valves is to divide a pump flow to operate two actuators (which may be under different load conditions and at different pressures) and to re-combine the return flows to synchronize actuator movement. Flow variation is within ±10% with the maximum variation of pressure and inlet flow and under normal conditions will be significantly less.

Pressure drop

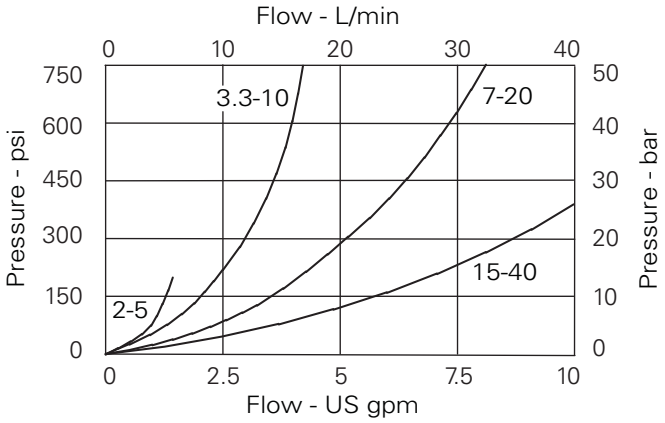

Note: When used on cylinders size to suit the return flow rate.

Where measurements are critical request certified drawings. We reserve the right to change specifications without notice.

2CFD50 - Flow divider/combiner

Pressure compensated, spool type
Up to 40 L/min (10.5 USgpm) • 350 bar (5000 psi)

Model code

2CFD– 4W – 40 S**

1 2 3 4

1 Function

2CFD50 - Cartridge only
2CFD55 - Cartridge and body

2 Port size

Code	Port size	Housing number - body only	
		Aluminium	Steel
Omit	Cartridge only		
3W	3/8" BSP inlet and outlet	B19187	
4W	1/2" BSP inlet and outlet	B20816	
8T-6T	1/2" SAE inlet and 3/8" SAE outlet	B19185	B21935

See section J for housing details.

3 Capacity (Input)

5 - 2-5 L/min (0.5-1.3 USgpm)
10 - 3.3 - 10 L/min (0.9-2.6 USgpm)
20 - 7-20 L/min (1.8-5.3 USgpm)
40 - 15-40 L/min (4.0-10.5 USgpm)
Other terminations available on request.

4 Seals

S - Nitrile (for use with most industrial hydraulic oils)
SV - Viton (for high temperature & most special fluid applications)

Dimensions

mm (inch)

Cartridge only
Basic code
2CFD50

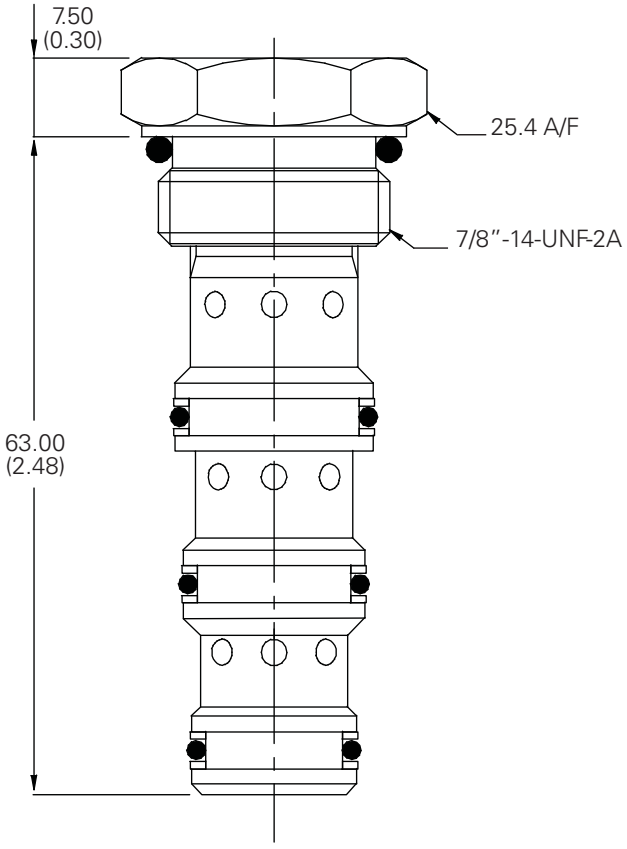

Complete valve
3/8", 1/2" Ports
Basic code
2CFD55

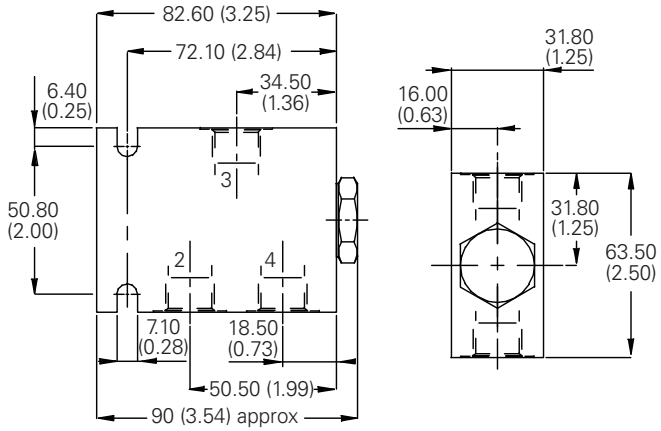

Notes: For applications above 210 bar (3000 psi), please consult our technical department or use the steel body option.

Notes: Blocking one leg will result in a large reduction in flow from the other. Valves with higher working pressures are available. Contact main office for details.

Where measurements are critical request certified drawings. We reserve the right to change specifications without notice.

2CFD200 - Flow divider/combiner

Pressure compensated, spool type
Up to 220 L/min (58 USgpm) • 280 bar (4000 psi)

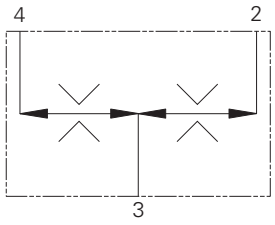

Operation

Inlet flow passes through the two matched orifices in the spools, through the spools and out of the radial holes in the sleeve. The matched orifices and the compensating springs ensure that the flow is divided equally, excess flow in either direction causes the spool to move and close the radial holes in the sleeve until equilibrium is restored. In the reverse direction the spools close together and regulate the flow in through the radial ports.

Features

One valve synchronizes in both directions. Matched spools give high accuracy under load and pressure imbalance conditions. Cartridge construction gives versatility of application. A valve may be fitted into a line body, a custom designed Hydraulic Integrated Circuit or other hydraulic equipment.

Sectional view

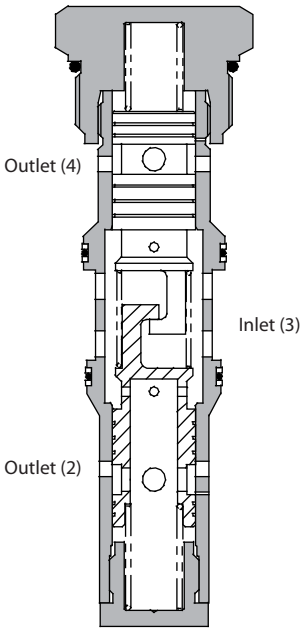

Performance data

Ratings and specifications

Figures based on an oil temp at 40˚C and of 32 cSt (150 SUS)	
Rated Flow	Up to 220 liters/min (58 USgpm)
Ratio division	50/50 standard
Maximum pressure	280 bar (4000 psi)
Cartridge material	Working parts hardened & ground steel. Zinc plated external steel body
Body material	Aluminum (up to 210 bar*) Add suffix "377" for steel option
Mounting position	Unrestricted
Cavity Number	CVB-42-04-0 (See Section M)
Torque cartridge into cavity	150 Nm (110 ft lbs)
Weight	2CFD200: 0,78 kg (1.72 lbs) 2CFD250: 2,50 kg (5.50 lbs)
Seal kit number	SK597 (Nitrile), SK597V (Viton®)
Recommended Filtration Level	BS5540/4 Class 18/13
Temperature range	–30° to +90° C (–22° to 194° F)
Nominal range	5 to 500 cSt

Viton is a registered trademark of E.I. DuPont

Description

This range of flow divider/combiner valves gives division of input flow into two equal parts and re-combination of flow in the reverse direction. Pressure compensation ensures that whether dividing or combining, equal flow is maintained over a wide range of pressure variation. A typical use of these valves is to divide a pump flow to operate two actuators (which may be under different load conditions and at different pressures) and to re-combine the return flows to synchronize actuator movement. Flow variation is within ±10% with the maximum variation of pressure and inlet flow and under normal conditions will be significantly less.

Pressure drop

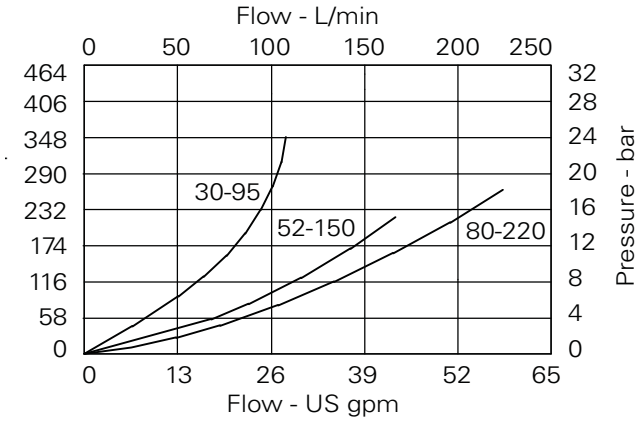

Note: When used on cylinders, size to suit the return flow rate.

Where measurements are critical request certified drawings. We reserve the right to change specifications without notice.

2CFD200 - Flow divider/combiner

Pressure compensated, spool type
Up to 220 L/min (58 USgpm) • 280 bar (4000 psi)

Model code **2CFD*** – 8W-6W – 95 S**

1 2 3 4

1 Function

2CFD200 - Cartridge only
2CFD250 - Cartridge & body

2 Port size

Code	Port size	Housing number - body only	
		Aluminium	Steel
Omit	Cartridge only		
8W-6W	1" BSP inlet, 3/4" BSP outlet	C12320	
10W-8W	1 1/4" BSP inlet, 1" BSP outlet	B7666	B9075
16T-12T	1" SAE inlet and 3/4" SAE outlet	B10710	
20T-16T	1-1/4" SAE inlet and 1" SAE outlet	B10711	B11819

See section J for housing details.

3 Capacity (input)

95 - 30-95 L/min (7.9-25 USgpm)
150 - 52-150 L/min (13.7-40 USgpm)
220 - 80-220 L/min (21-58 USgpm)

4 Seals

S - Nitrile (for use with most industrial hydraulic oils)
SV - Viton (for high temperature & most special fluid applications)

Dimensions

mm (inch)

Cartridge only
Basic code
2CFD200

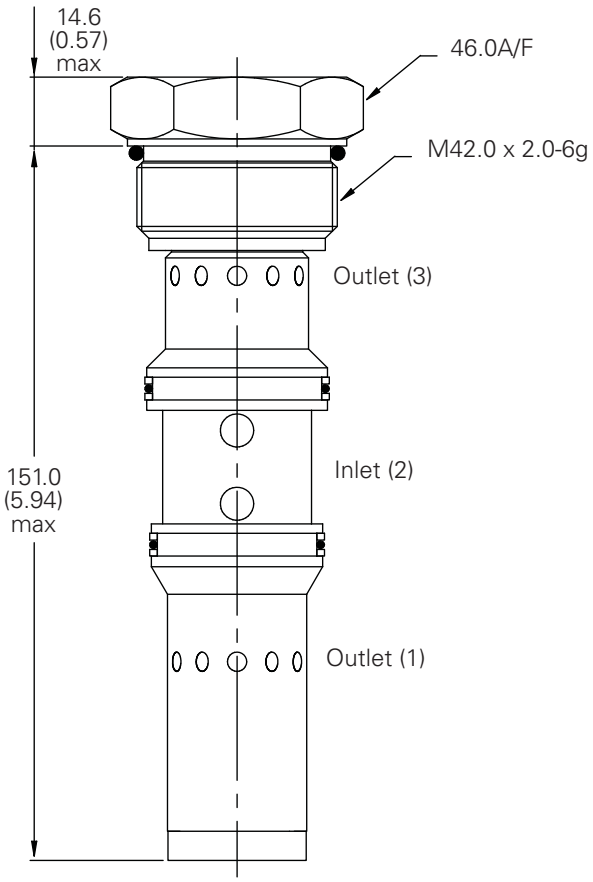

Complete valve
3/4", 1", 1 1/4" Ports
Basic code
2CFD250

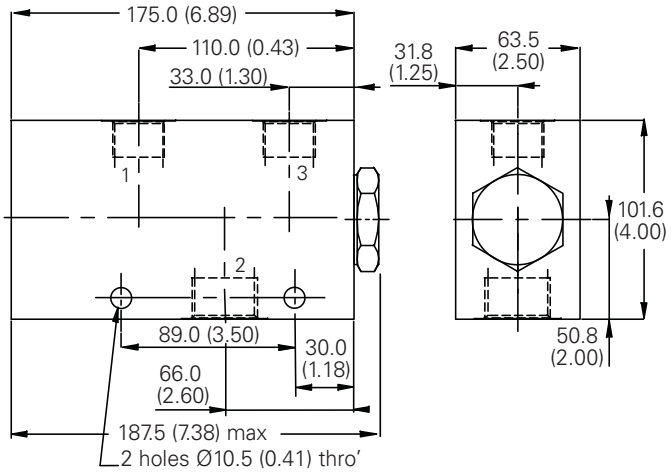

Note: Blocking one leg will result in a large reduction in flow from the other. Valves with higher working pressures are available. Contact factory for details.

Note: For applications above 210 bar (3000 psi)please consult our technical department or use the steel body option

Where measurements are critical request certified drawings. We reserve the right to change specifications without notice.

FDC1-20 - Flow divider/combiner

Line mounted, pressure compensated, spool type
Up to 378 L/min (100 USgpm) • 210 bar (3000 psi)

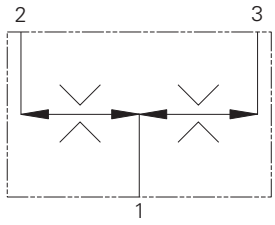

Operation

Inlet flow passes through the two matched orifices in the spools, through the spools and out of the radial holes in the sleeve. The matched orifices and the compensating springs ensure that the flow is divided equally, excess flow in either direction causes the spool to move and close the radial holes in the sleeve until equilibrium is restored. In the reverse direction the spools close together and regulate the flow in through the radial ports.

Features

One valve synchronizes in both directions. Matched spools give high accuracy under load and pressure imbalance conditions.

Sectional view

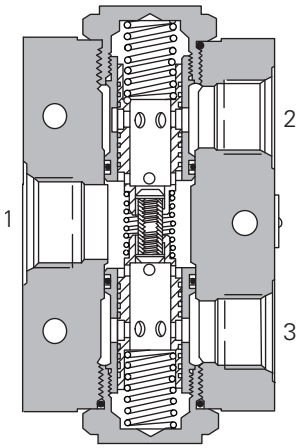

Performance data

Ratings and specifications

Performance data is typical with fluid at 21,8 cST (105 SUS) and 49°C (120°F)	
Typical application pressure (all ports)	210 bar (3000 psi)
Cartridge fatigue pressure (infinite life)	210 bar (3000 psi)
Rated inlet flow	See model code
Fluids	All general purpose hydraulic fluids such as MIL–H–5606, SAE 10, SAE 20, etc.
Filtration	Cleanliness code 18/**16/13**
Standard housing materials	Aluminum
Weight cartridge only	2,6 kg. (5.75 lbs)
Seal kits	889639 (Buna–N) 889643 (Viton®)

Viton is a registered trademark of E.I. DuPont

H

Description

This range of flow divider/combiner valves gives division of input flow into two equal parts and re-combination of flow in the reverse direction. Pressure compensation ensures that whether dividing or combining, equal flow is maintained over a wide range of pressure variation. A typical use of these valves is to divide a pump flow to operate two actuators (which may be under different load conditions and at different pressures) and to re-combine the return flows to synchronize actuator movement. Flow variation is within ±10% with the maximum variation of pressure and inlet flow and under normal conditions will be significantly less.

Pressure drop

Cartridge only

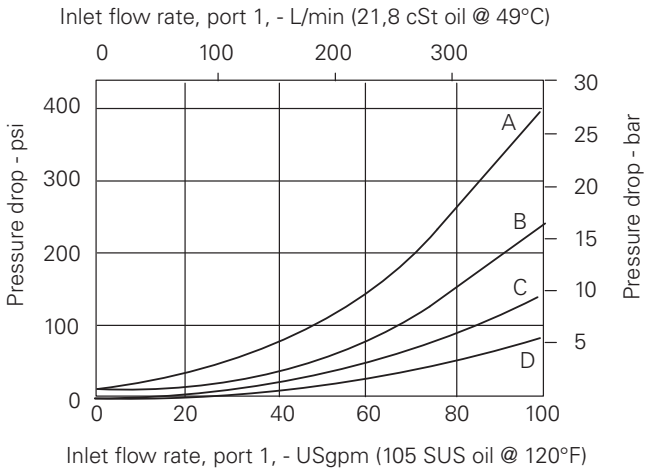

Flow division

(See model code position 5)

A - 3* spool
B - 4* spool
C - 6* spool
D - 8* spool

Where measurements are critical request certified drawings. We reserve the right to change specifications without notice.

FDC1-20 - Flow divider/combiner

Line mounted, pressure compensated, spool type
Up to 378 L/min (100 USgpm) • 210 bar (3000 psi)

Model code

FDC1 – 20 (V) – * – ** – 00**

1 2 3 4 5 6

1 Function

FDC1 - Flow divider/combiner

2 Size

20 - 20 size

3 Seals

Blank - Buna-N
V - Viton®

4 Port Size

16T - SAE 16 (light duty)
20T - SAE 20 (light duty)
(Available as a complete assembly only.)

5 Flow divisions (Ratios)

Code	Flow division %		Max	Inlet flow
	Port 4	Port 2	L/min	(USgpm)
33	50	50	190	50
34	43	57	228	60
36	33	67	265	70
44	50	50	265	70
66	50	50	379	100
88	50	50	379	100

6 Special features

00 - None
(Only required if valve has special features, omitted if "00".)

Dimensions

mm (inch)

Complete valve
Basic code
FDC1-20

Torque cartridge in housing to 128–155 Nm (95–115 ft lbs)

Notes: Minimum inlet flow should not be less than 1/4 of maximum inlet flow for a given code.

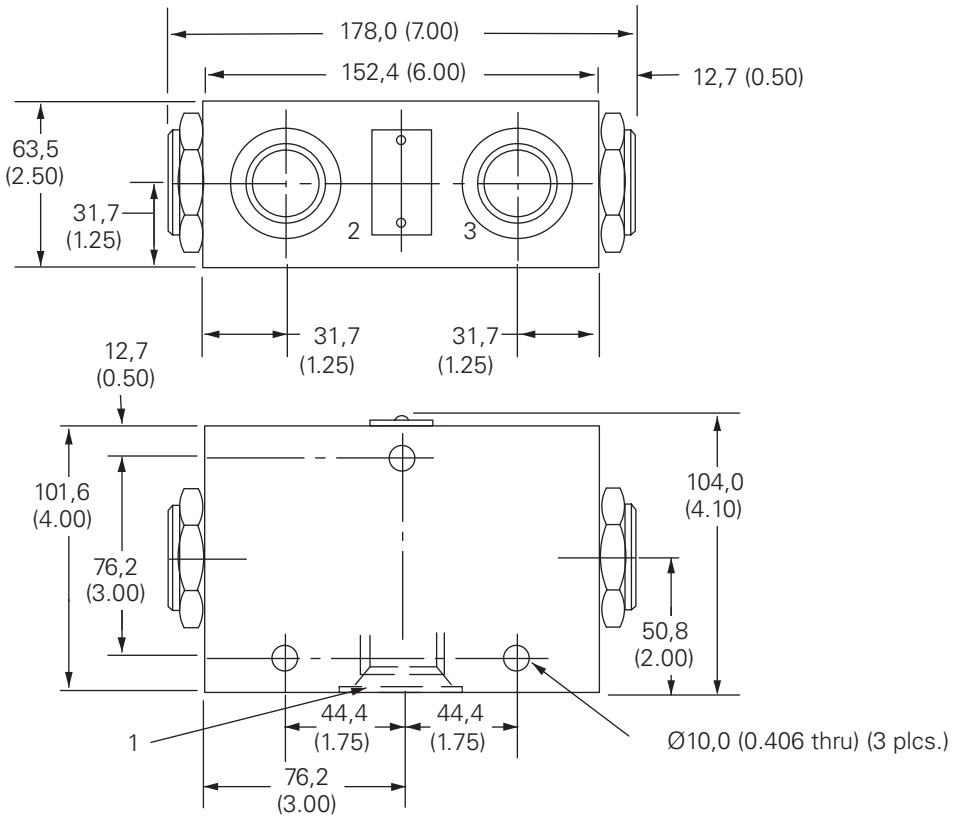

Where measurements are critical request certified drawings. We reserve the right to change specifications without notice.

FDC3-16 - Flow divider/combiner

Pressure compensated, spool type, posi-traction
Up to 152 L/min (40 USgpm) • 210 bar (3000 psi)

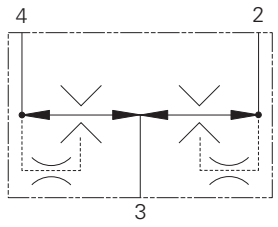

Operation

This valve is used in the dividing mode. It will take the inlet flow (port 3) and split the flow to ports 2 and 4. In the combining mode this valve will take the inlet flows from ports 2 and 4 and combine them into port 3 according to the ratio specified.

Features

Hardened and ground and honed working components. Cartridge construction for maximum mounting flexibility.

Sectional view

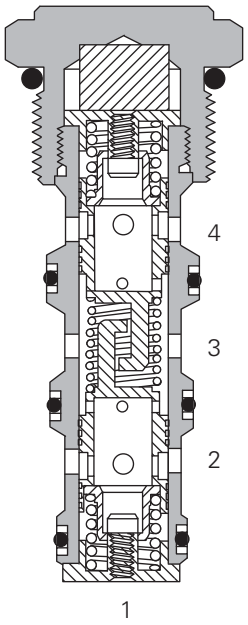

Performance data

Ratings and specifications

Performance data is typical with fluid at 21,8 cST (105 SUS) and 49°C (120°F)	
Typical application pressure (all ports)	210 bar (3000 psi)
Cartridge fatigue pressure (infinite life)	210 bar (3000 psi)
Rated inlet flow	See model code, item
Temperature range	-40° to 120° C (-40° to 248° F)
Fluids	All general purpose hydraulic fluids such as: MIL–H–5606, SAE 10, SAE 20, etc.
Filtration	Cleanliness code 18/**16/13**
Standard housing materials	Aluminum
Weight cartridge only	0,35 kg. (0.78 lbs)
Seal kits	889634 (Nitrile) 889638 (Viton®)

Viton is a registered trademark of E.I. DuPont

Description

This is a pressure compensated flow divider / combiner posi-traction screw in cartridge valve. This is ideal for use in transmission systems where the turning circle requires one wheel to go faster than the other or where rapid make up is required between cylinders at the end of stroke.

Pressure drop

Cartridge only

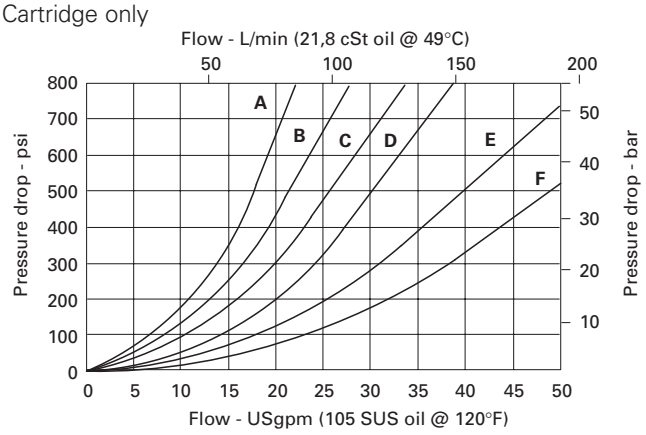

Flow division

(See model code position 5)

A - 22 spool
B - 33 spool
C - 44 spool
D - 55 spool
E - 66 spool
F - 88 spool

Where measurements are critical request certified drawings. We reserve the right to change specifications without notice.

FDC3-16 - Flow divider/combiner

Pressure compensated, spool type, posi-traction
Up to 152 L/min (40 USgpm) • 210 bar (3000 psi)

Model code

FDC3 – 16 (V) – ** – ** – 00

1 2 3 4 5 6

1 Function

FDC3 - Posi-traction valve

2 Size

16 - 16 size

3 Seals

Blank - Buna-N
V - Viton®

4 Port size

Code	Port size	Housing number
		Aluminium
0	Cartridge only	
12T	SAE 12	566200
6B	3/4" BSPP	02-175468

See section J for housing details.

5 Flow divisions

Code	Flow division %		Max	Inlet flow
	Port 4	Port 2	L/min	(USgpm)
22	50	50	57,0	(15)
33	50	50	76,0	(20)
44	50	50	106,4	(28)
55	50	50	126,2	(34)
66	50	50	152,0	(40)
88	50	50	228,0	(60)

6 Special features

00 - None
(Only required if valve has special features, omitted if "00".)

Dimensions

mm (inch)

Torque cartridge in aluminum housing to 108–122 Nm (80–90 ft lbs)

Cartridge only
Basic code
FDC3-16

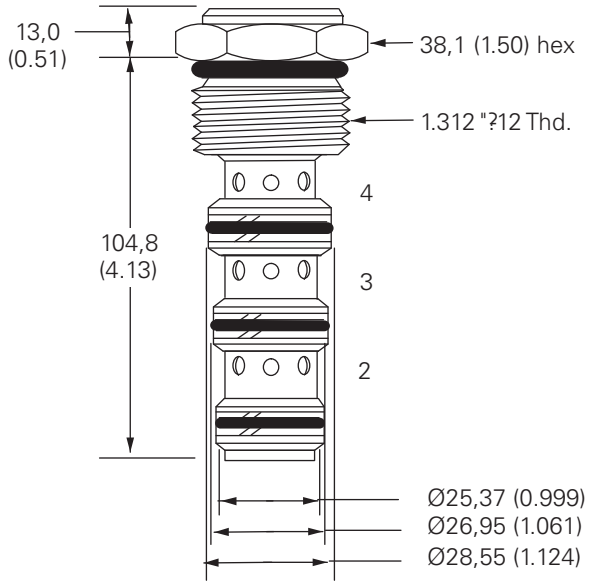

Notes: Port 1, unused, blocked by blind cavity.

Minimum inlet flow should not be less than 1/4 of maximum inlet flow for a given code.

H

Where measurements are critical request certified drawings. We reserve the right to change specifications without notice.

FDC3-20 - Flow divider/combiner

Pressure compensated, spool type, posi-traction
Up to 570 L/min (150 USgpm) • 210 bar (3000 psi)

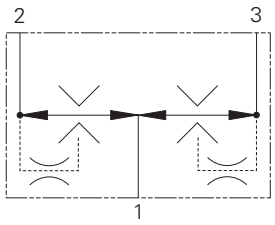

Operation

This valve is used in the dividing mode. It will take the inlet flow (port 3) and split the flow to ports 2 and 4. In the combining mode this valve will take the inlet flows from ports 2 and 4 and combine them into port 3 according to the ratio specified.

Features

One valve synchronizes in both directions. Matched spools give high accuracy under load and pressure imbalance conditions.

Sectional view

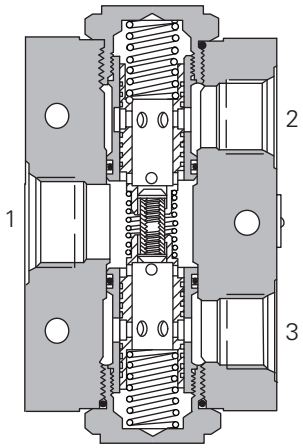

Performance data

Ratings and specifications

Performance data is typical with fluid at 21,8 cST (105 SUS) and 49°C (120°F)	
Typical application pressure (all ports)	210 bar (3000 psi)
Cartridge fatigue pressure (infinite life)	210 bar (3000 psi)
Rated inlet flow	See model code, item
Temperature range	-40° to 120° C (-40° to 248° F)
Fluids	All general purpose hydraulic fluids such as MIL–H–5606, SAE 10, SAE 20, etc.
Filtration	Cleanliness code 18/**16/13**
Standard housing materials	Aluminum
Weight cartridge only	0,35 kg. (0.78 lbs)
Seal kits	889634 (Nitrile) 889638 (Viton®)

Viton is a registered trademark of E.I. DuPont

Description

This is a pressure compensated flow divider / combiner posi-traction valve. This is ideal for use in transmission systems where the turning circle requires one wheel to go faster than the other or where rapid make up is required between cylinders at the end of stroke.

Pressure drop

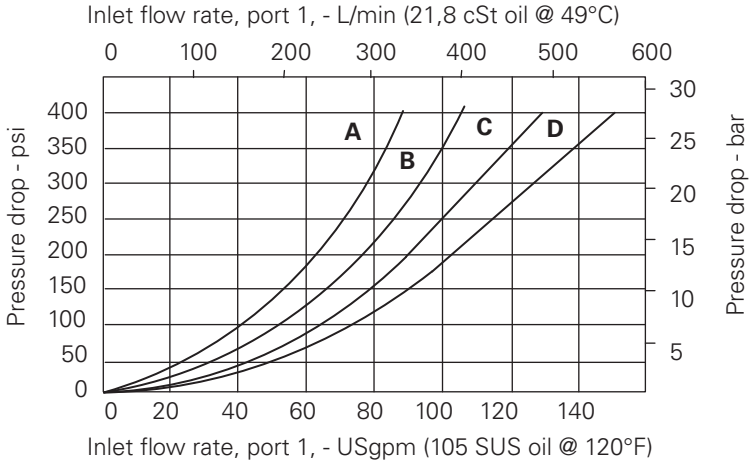

Flow division

(See model code position 5)
A - 33 spool
B - 44 spool
C - 66 spool
D - 88 spool

Where measurements are critical request certified drawings. We reserve the right to change specifications without notice.

FDC3-20 - Flow divider/combiner

Pressure compensated, spool type, posi-traction
Up to 570 L/min (150 USgpm) • 210 bar (3000 psi)

Model code

FDC3 – 20 (V) – * – ** – 00**

1 2 3 4 5 6

1 Function

FDC3 - Posi-traction valve

2 Size

20 - 20 size

3 Seal material

Blank - Buna-N
V - Viton®

4 Port size

16T – SAE 16 (light duty)
20T – SAE 20 (light duty)
(Available as a complete assembly only.)

5 Flow divisions (Ratios)

Code	Flow division %		Rated	Inlet flow
	Port 4	Port 2	L/min	(USgpm)
33	50	50	190,0	(50)
44	50	50	266,0	(70)
66	50	50	380,0	(100)
88	50	50	570,0	(150)

6 Special features

00 - None
(Only required if valve has special features, omitted if "00".)

Dimensions

mm (inch)

Complete valve
Basic code
FDC3-20

Torque cartridge in housing to 128–155 Nm (95–115 ft lbs)

Note: Minimum inlet flow should not be less than 1/4 of maximum inlet flow for a given code.

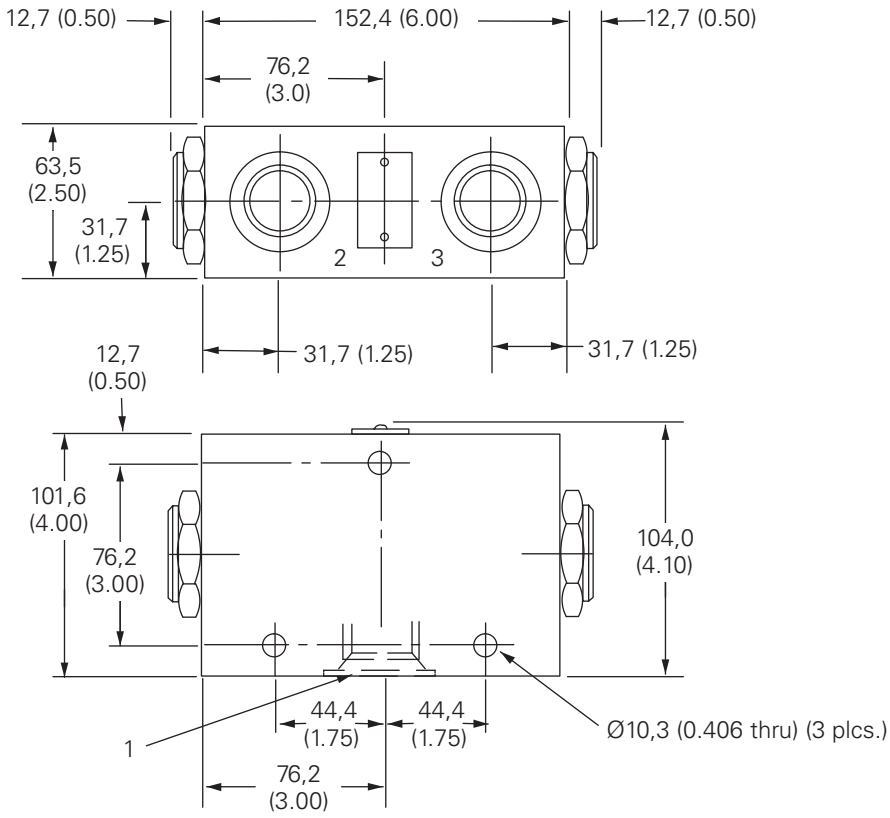

Where measurements are critical request certified drawings. We reserve the right to change specifications without notice.

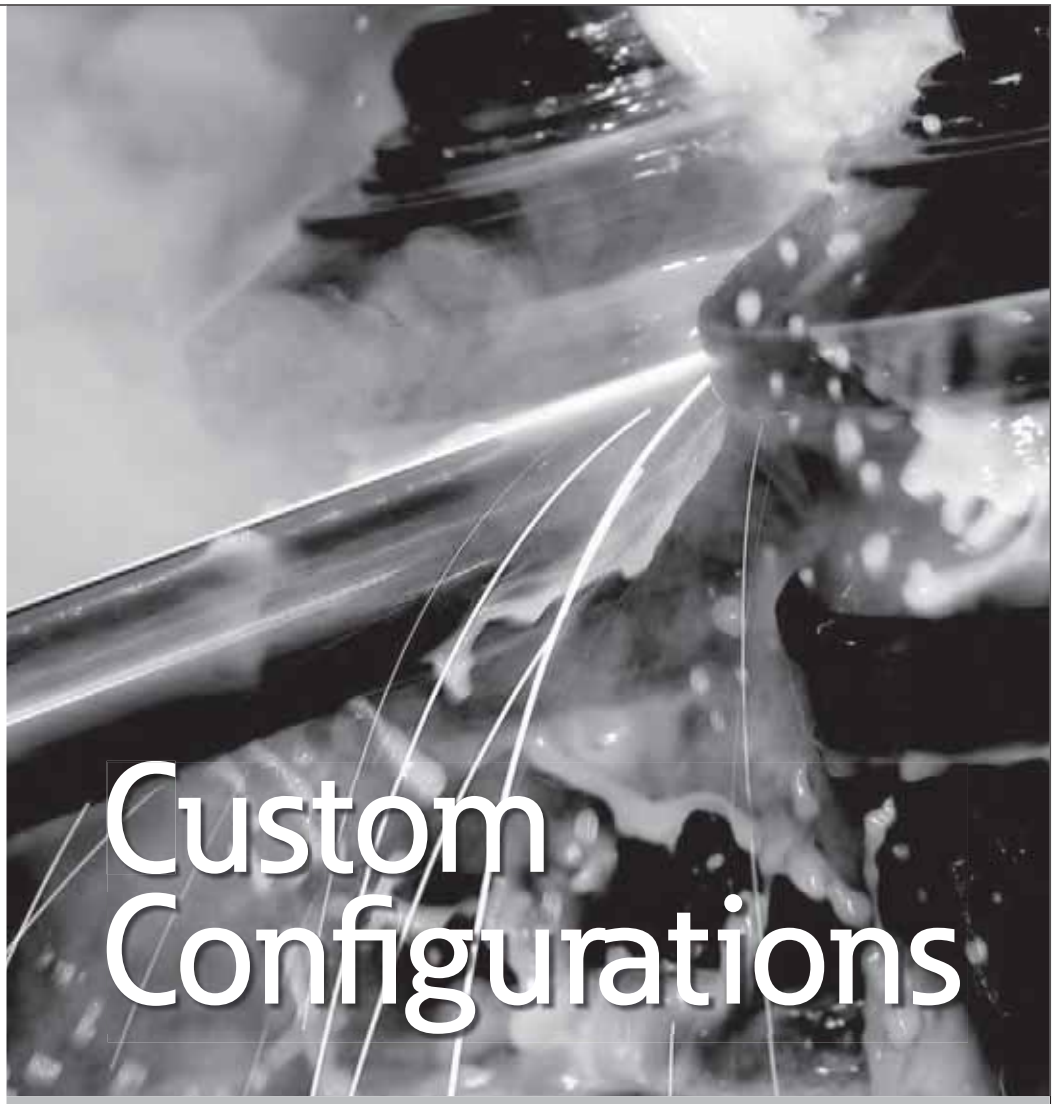

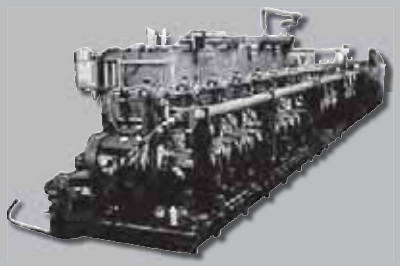

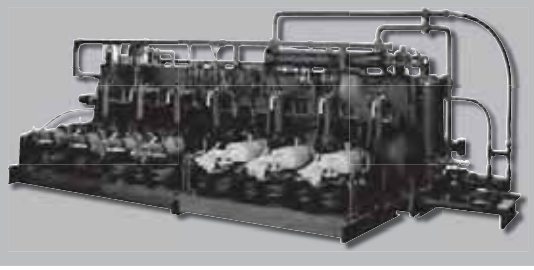

EATON
Powering Business Worldwide

Custom Power Units

- Custom Designed to your specifications
- Up to 5000hp, 2000 gpm
- Installation services available

Logic elements

Differential pressure sensing elements for applications up to 350 bar (5000 psi) and 400 L/min (100 USgpm)



Powering Business Worldwide

Logic elements

LOGIC ELEMENTS I-4
APPLICATION EXAMPLES I-6
DPS2-8 - LOGIC ELEMENT I-14
DPS2-10 - LOGIC ELEMENT I-16
DPS2-12 - LOGIC ELEMENT I-18
DPS2-16 - LOGIC ELEMENT I-20
DPS2-20 - LOGIC ELEMENT I-22
DPS2 ..... I-24
LE402 - LOGIC ELEMENT I-26
LEV402 - LOGIC ELEMENT I-28

Logic elements

Valve locator

Functional symbol

Various

Model	Cavity	Flow rating	Typical pressure	Page
Logic element spool		**L/min (USgpm)**	**bar (psi)**	
DPS2-8	C-8-3S	30 (8)	350 (5000)	I-14
DPS2-10	C-10-3S	60 (15)	290 (4200)	I-16
DPS2-12	C-12-3S	114 (30)	350 (5000)	I-18
DPS2-16	C-16-3S	189 (50)	290 (4200)	I-20
DPS2-20	C-20-3S	303 (80)	290 (4200)	I-20

Model	Cavity	Rating	Pressure	Page
Logic element Poppet		**L/min (USgpm)**	**bar (psi)**	
DPS2-10	C-10-3S	60 (15)	350 (5000)	I-60
DPS2-12	C-12-3S	114 (30)	350 (5000)	I-18
DPS2-16	C-16-3S	189 (50)	350 (5000)	I-20
DPS2-20	C-20-3S	303 (80)	350 (5000)	I-22

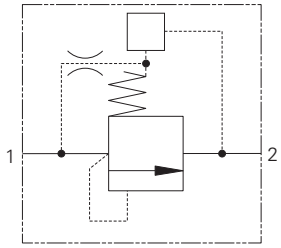

Model	Cavity	Flow rating	Typical pressure	Page
Logic element		**L/min (USgpm)**	**bar (psi)**	
LE402	C-20-2	350 (95)	350 (5000)	I-26

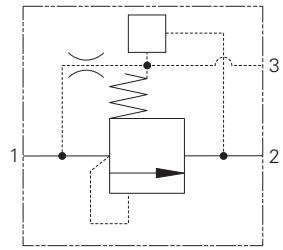

Model	Cavity	Flow rating	Typical pressure	Page
Logic element		**L/min (USgpm)**	**bar (psi)**	
LEV402	A21773	400 (100)	250 (3500)	I-28

Where measurements are critical request certified drawings. We reserve the right to change specifications without notice.

This section gives basic specifications for Eaton logic element threaded cartridge valves. Its purpose is to provide a quick, convenient reference tool when choosing these valves or designing a system using these components.

All cartridges have hardened and ground spools, and/or honed sleeves, poppets and sharp-edged ground steel seats. This provides an excellent product that is dirt-tolerant, has reliable seating, and is suitable for fast cycling with long life.

These cartridges provide the system designer with a versatile range of elements for use in HIC packages for controlling pressure, flow and direction of flow.

The range includes:

- Pressure compensators (Section H)
- Pressure compensators with priority and bypass outlets (Section H)
- Differential–pressure sensing elements

The correct selection of these products can enhance machine performance, shorten the design process and minimize manufacturing costs of manifold blocks.

DIfferential–pressure sensing elements – DPS2

For controlling pressure, flow or direction (including 3- and 4-way bridge circuits) the DPS2 is used with the aid of external pilot operators. The DPS2 elements are function building blocks which respond to pressure differential signals, providing the capacity to switch or modulate flows up to 303 L/min (80 USgpm) and pressure to 350 bar (5000 psi).

The choice of pilot arrangements related to DPS2 variants can minimize the number of construction holes in a manifold, simplifying design and reducing costs.

All poppet type DPS2 elements have recently been upgraded to 350 bar (5000 psi).

Flow compensators – PCS3 (Section H)

An essential component of a pressure compensated flow control which, with an external fixed or variable orifice, provides the required compensated flow characteristic. Excess flow is diverted at maximum system pressure. Excess fluid upstream must be diverted e.g. through a relief to tank.

Pressure compensator with priority and bypass outlets –PCS4.

Similar in function to the PCS3. The major difference is that excess flow is diverted at priority flow pressure, instead of at maximum system pressure, as is the case with PCS3 compensators. The excess flow can pass to a secondary circuit or to tank.

Where measurements are critical request certified drawings. We reserve the right to change specifications without notice.

Application examples

DPS2 Logic elements for pressure control

Pressure control functions

Pressure relief or sequence example

With external pilot supply and pilot relief

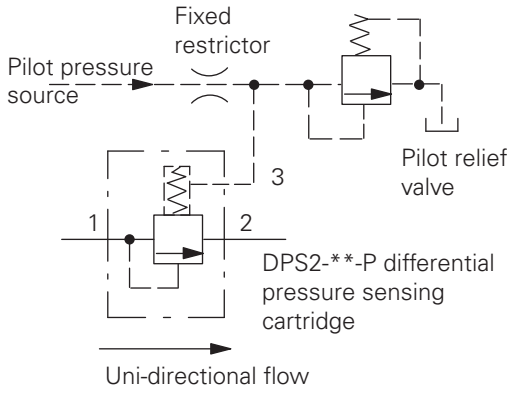

Pressure relief or sequence example

With internal pilot supply and pilot relief

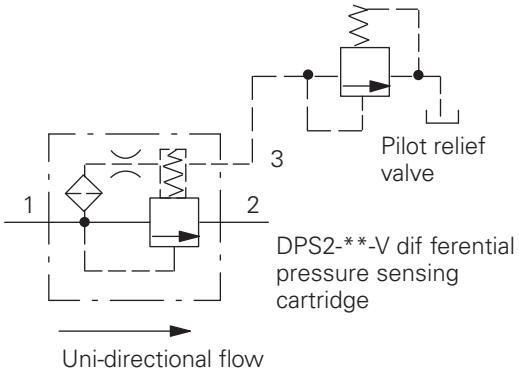

Pressure reducing example

Non-relieving type

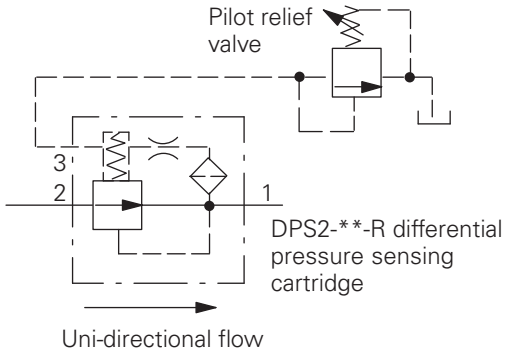

Where measurements are critical request certified drawings. We reserve the right to change specifications without notice.

Acculator charging with PUV3-10 pilot stage

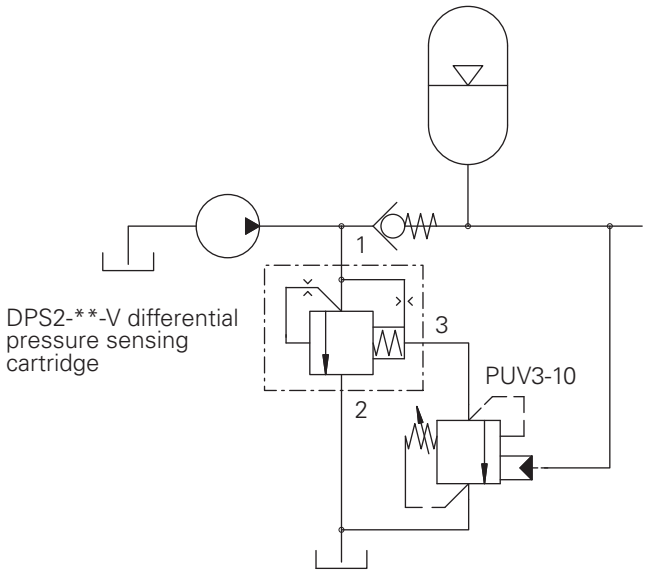

Pressure reducing and relieving

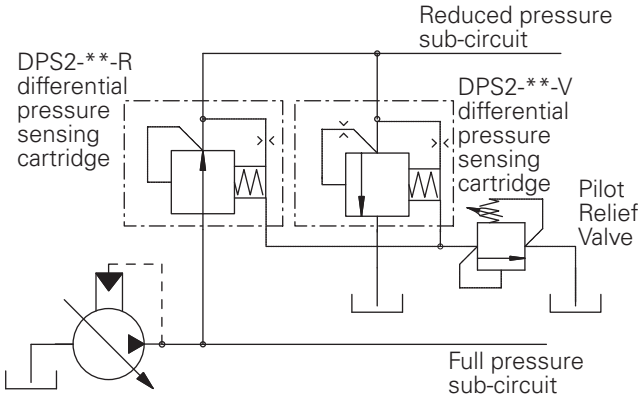

Hi/Low unloading circuit with externally piloted pressure sequence pilot valve

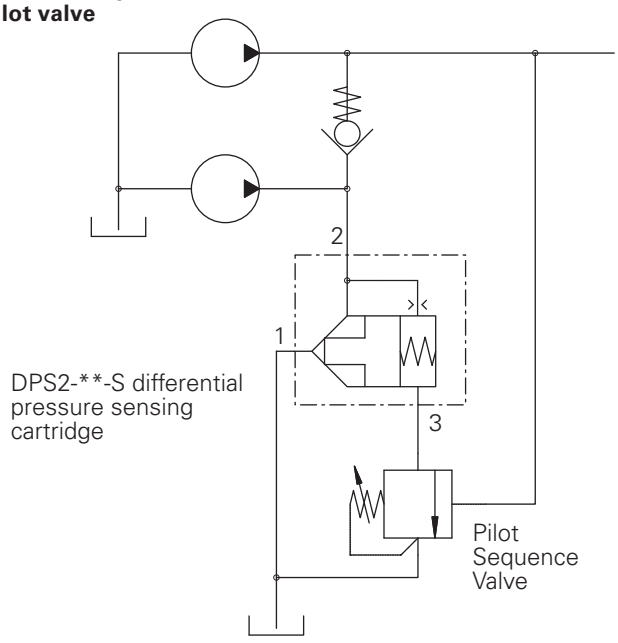

Hi/Low unloading circuit with externally piloted pressure sequence pilot valve

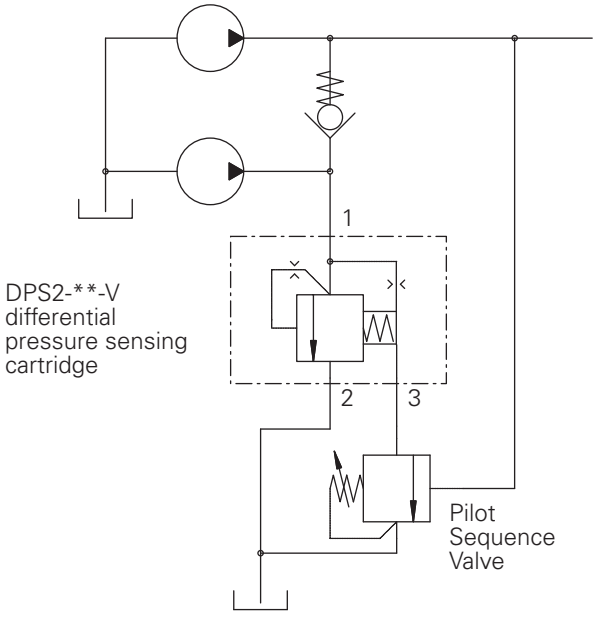

Where measurements are critical request certified drawings. We reserve the right to change specifications without notice.

Application examples

DPS2 Elements for flow control

Pressure compensated flow control example

With downstream fixed or variable restrictor

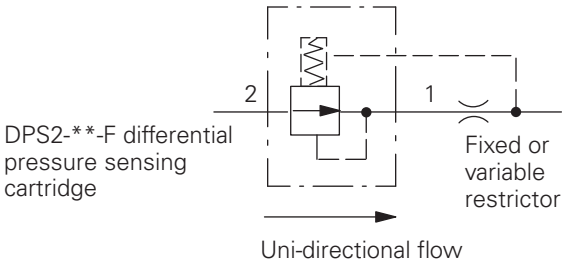

Pressure compensated priority flow control example

With fixed or variable priority flow control

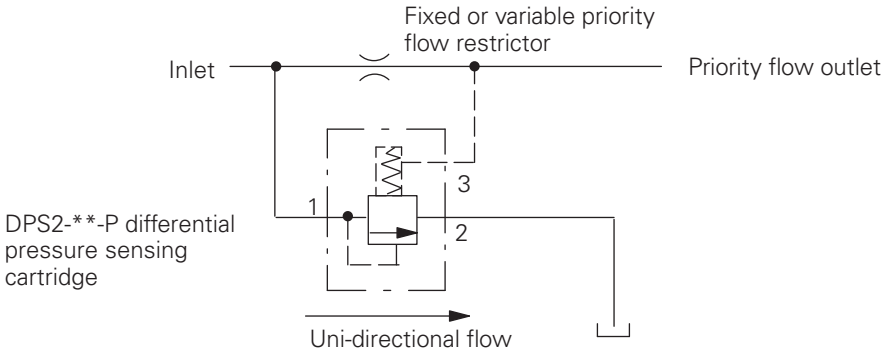

Where measurements are critical request certified drawings. We reserve the right to change specifications without notice.

Load sensing priority flow control example

With pressure limiting and venting

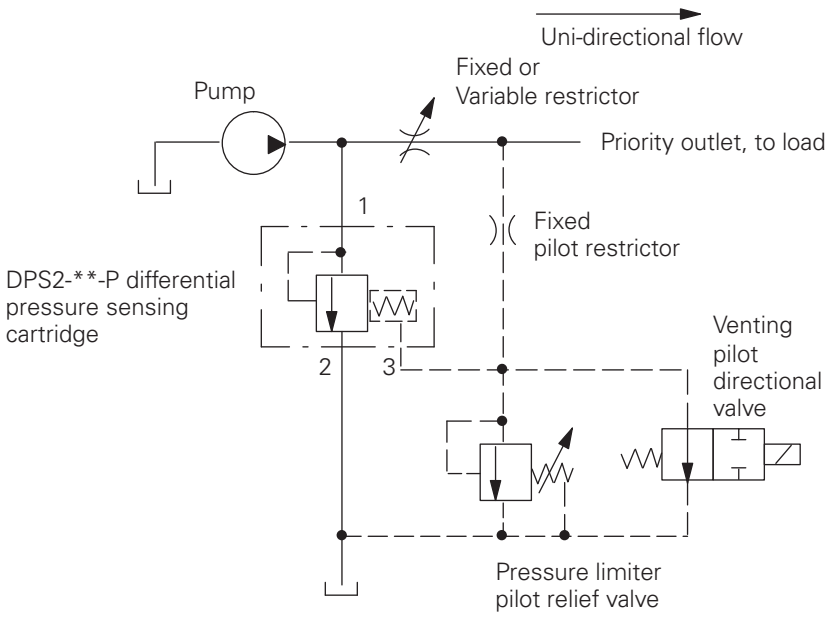

Load sensing priority flow control example

Directional control version with pressure limiter

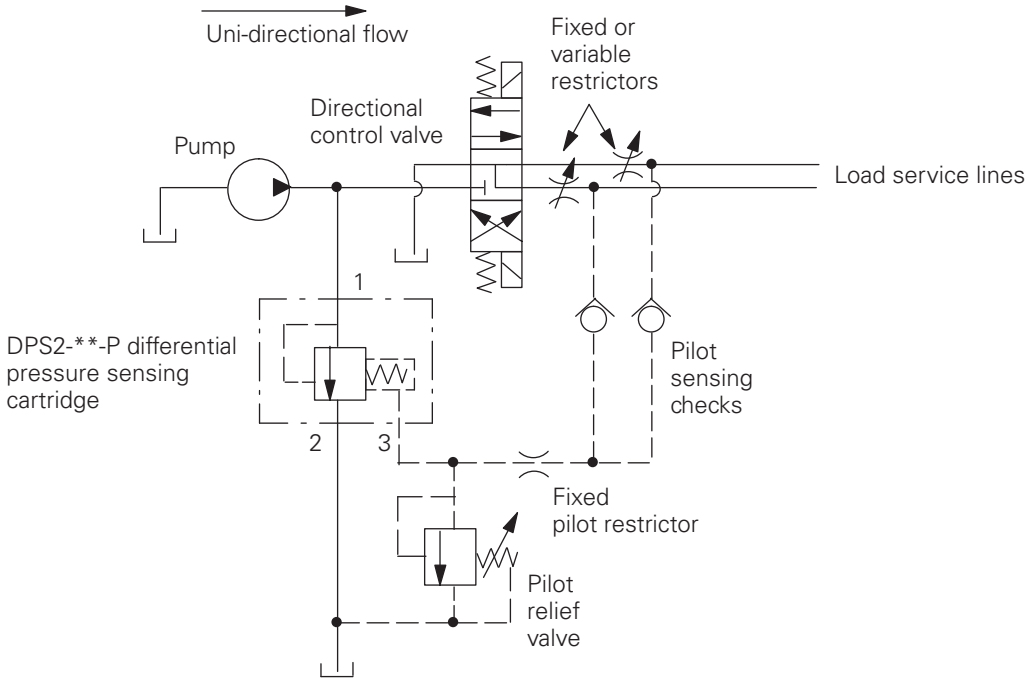

Where measurements are critical request certified drawings. We reserve the right to change specifications without notice.

Application examples

PPS2 Elements for flow control

Load sense circuit example

For parallel operation

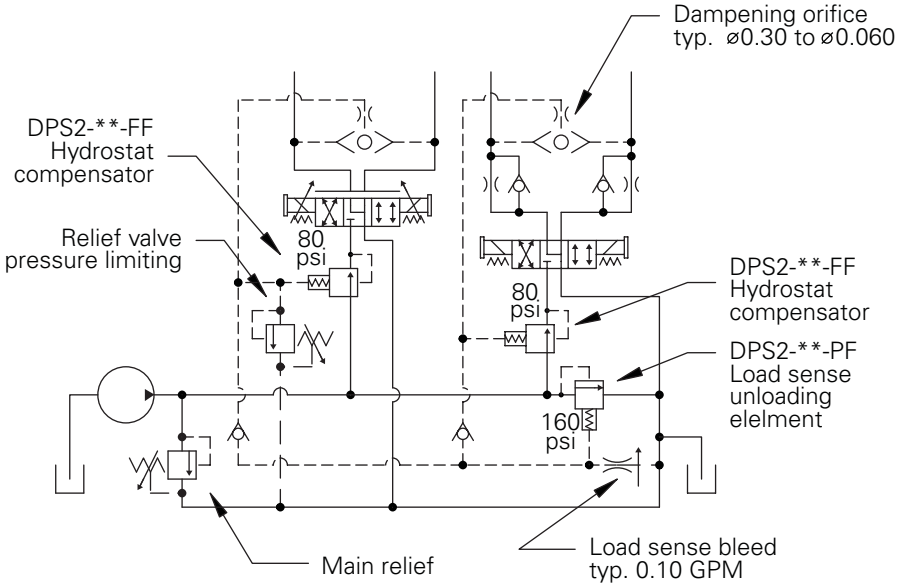

Load sense circuit example

For priority and parallel operation

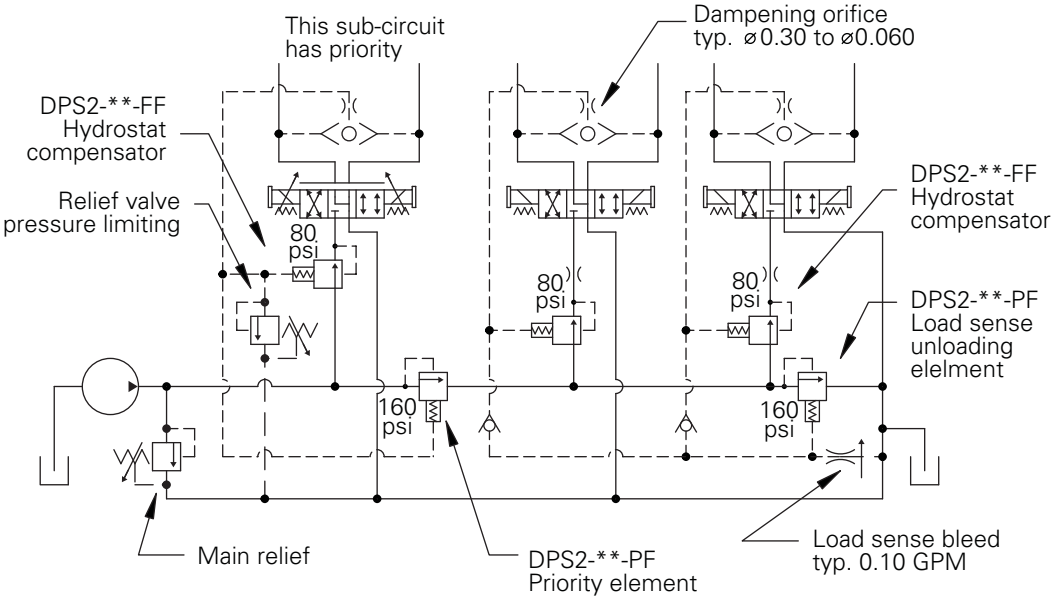

Note

1. Pressure limiting relief must be < main relief setting.
2. If pre-ssure limiting is not used; port reliefs set < main relief are required.

Where measurements are critical request certified drawings. We reserve the right to change specifications without notice.

Two-way, two-position, normally open examples

Switched by 3-way, 2-position pilot valve and external pilot pressure

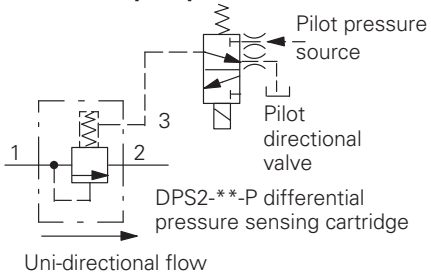

Switched by external pilot pressure and vented through 2-way , 2-position pilot valve

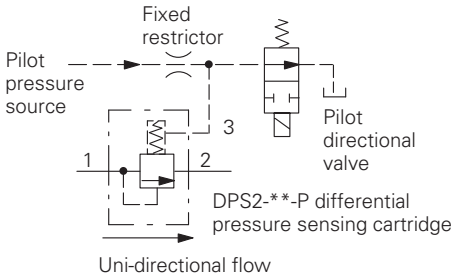

With DPS2--V cartridge and internal pilot supply & vented through 2-way,2 position pilot valve**

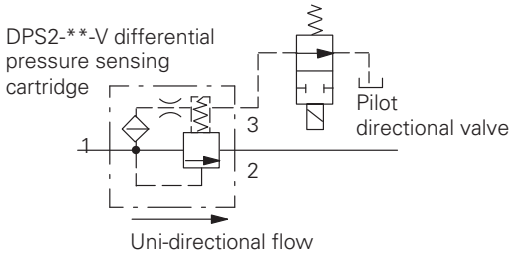

With DPS2--B cartridge and internal pilot supply & vented through 2-way,2 position pilot valve**

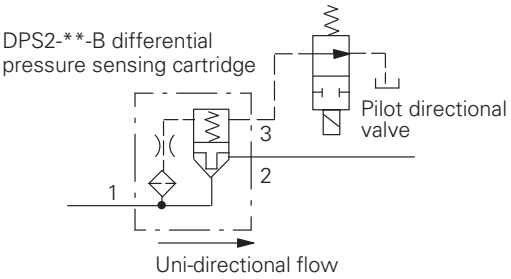

With DPS2--S cartridge and internal pilot supply & vented through 2-way, 2 position pilot valve**

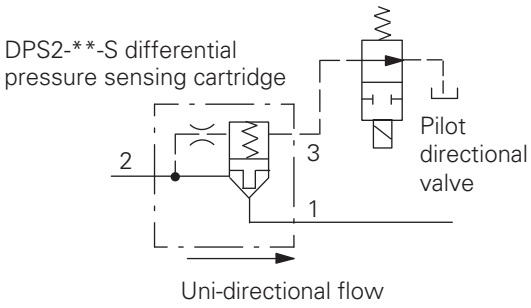

With DPS2--T cartridge and internal pilot supply & switched by 3-way, 2 position pilot valve and external pilot pressure**

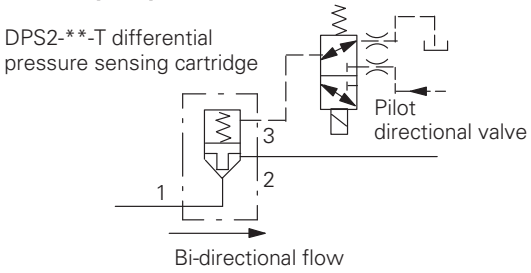

With DPS2--T cartridge and internal shuttle-selected pilot supply**

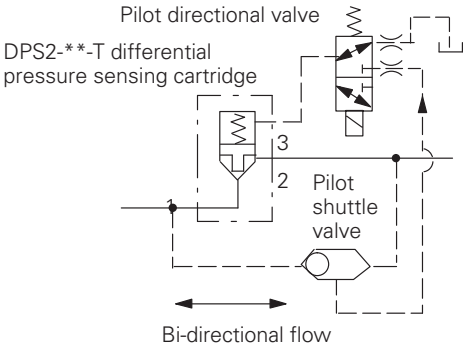

With DPS2--T cartridge, external pilot supply and two-way two-position pilot valve**

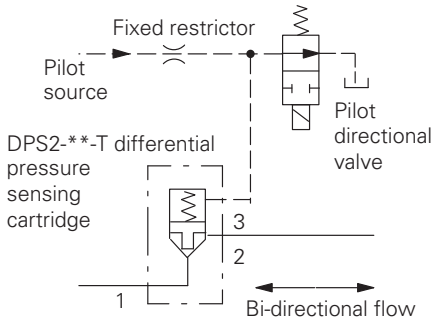

Where measurements are critical request certified drawings. We reserve the right to change specifications without notice.

Application examples

DPS2 Elements for directional control

Three-way bridge circuits

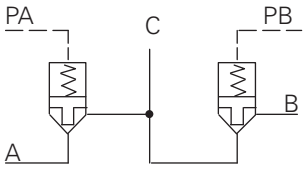

Example 1, with DPS2--T**
Poppet type

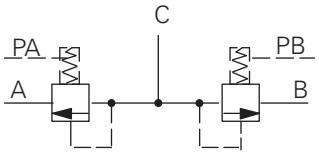

Example 2, with DPS2--P**
Spool type

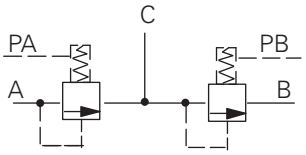

Example 3, with DPS2--P**
Spool type

Required flow path	Pilot pressure to		Available from form		
	PA	PB	1	2	3
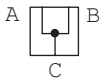	0	0	Yes	Yes	No
	1	0	Yes	Yes	Yes

Required flow path	Pilot pressure to		Available from form		
	PA	PB	1	2	3
	0	1	Yes	Yes	No
	1	1	Yes	Yes	Yes

1- Pressure applied 0- Pressure vented

Note:
Pilot pressure, modified by valve area ratio (if any), must exceed load pressure at valve in order to close valve.

Where measurements are critical request certified drawings. We reserve the right to change specifications without notice.

Four-way bridge circuits

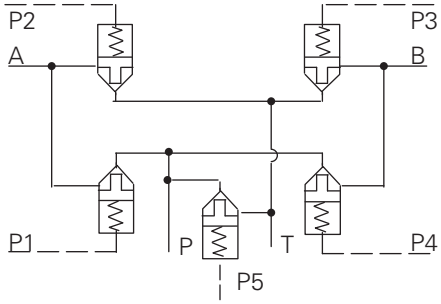

With DPS2--T**
Poppet type

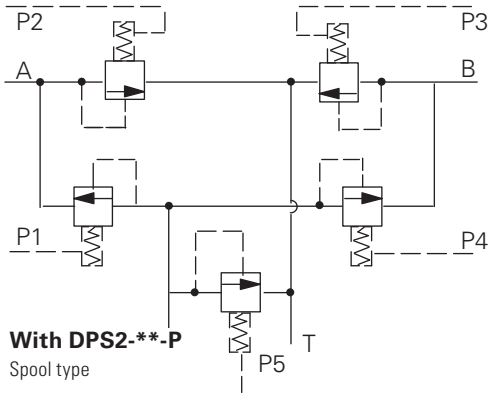

With DPS2--P**
Spool type

Required flow path	Pilot pressure to					Required flow path	Pilot pressure to				
	P1	P2	P3	P4	P5		P1	P2	P3	P4	P5
A B P T	1	1	1	1	1		1	1	0	1	1
	0	0	0	0	0		0	1	1	1	1
	1	1	0	0	0		0	1	0	1	1
	0	0	1	1	0		1	0	1	0	1
	1	1	1	1	0		1	1	1	0	1
	1	0	0	1	1		1	0	1	1	1
	0	1	1	0	1						

1- Pressure applied 0- Pressure vented

Note:
Pilot pressure, modified by valve area ratio (if any), must exceed load pressure at valve in order to close valve.

DPS2-8 - Logic element

Differential pressure sense valves
30 L/min (8 USgpm) • 350 bar (5000 psi)

Description

These are normally open or closed logic elements with or without a control orifice. They can be used as main valves for the control of high flows using small pilot cartridges, as compensators or load sense elements.

Operation

This valve is used as a main section of a pilot controlled valve assembly. This valve has multiple uses when used with either directional control, flow control or pressure control cartridges. Refer to application examples.

Features

Hardened and ground and honed working components. Cartridge construction for maximum mounting flexibility.

Functional symbols

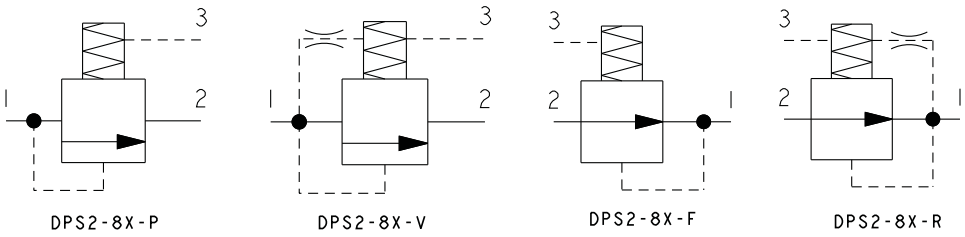

Sectional view

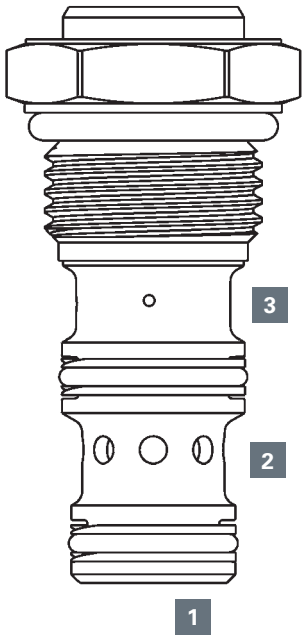

Performance data

Ratings and specifications

Performance data is typical with fluid at 21,8 cSt (105 SUS) and 49° C (120° F)	
Typical application pressure	Spool type: 350 bar (5000 psi)
Cartridge fatigue pressure	350 bar (5000 psi)
Rated flow	30 L/min (8 USgpm)
Pilot ratio	Spool type P, V, R, F: 1:1
Internal leakage	Spool type: 82 cm^3/min. (5 in^3/min) max @ 350 bar (5000 psi)
Temperature range	-40° to 120° C (-40° to 248° F)
Cavity	C-8-3
Standard housing materials	Aluminium or Steel
Fluids	All general purpose hydraulics fluids such as: MIL-H-5606, SAE 10, SAE 20 etc
Filtration	Cleanliness code 18/**16/13**
Weight cartridge only (Fixed/Adjustable)	0.07 kg (0.16 lbs) / 0.20 kg (0.43 lbs)
Seal kit	02-160755 (Buna-N), 02-160756 (Viton®)

Viton is a registered trademark of E.I. DuPont

Pressure drop curve

Cartridge only

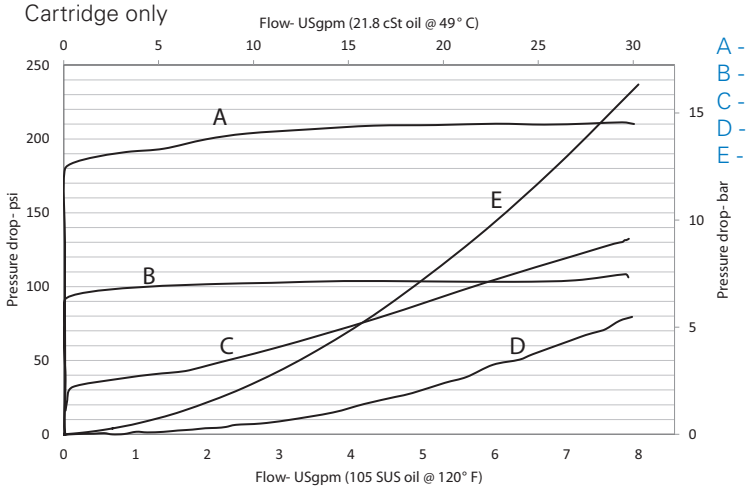

A - DPS2-8-P/V - 160 PSI
B - DPS2-8-P/V - 80 PSI
C - DPS2-8-P/V - 40 PSI
D - DPS2-8-P/V- Without Spring
E - DPS2-8-F/R - Free Flow

Where measurements are critical request certified drawings. We reserve the right to change specifications without notice.

DPS2-8 - Logic element

Differential pressure sense valves
30 L/min (8 USgpm) • 350 bar (5000 psi)

Model code

DPS2 – 8 (V) – * – * – ** – *** – **

1 2 3 4 5 6 7 8

1 Function

DPS2 - Differential pressure sensing

2 Size

8 - 8 size

3 Seal material

Blank - Buna-N

V - Viton®

4 Function

P - Spool, N/C (L/S element)
V - Spool, N/C

R - Spool, pressure reducing, N/O

F - Spool, flow control, N/O (hydrostat)

5 Port size

0 - Cartridge only

6 Adjustment

F - None
P - Pressure adjustments

"P" adjustment is not available with F and R functions.

Code	Port size	Housing number
0	Cartridge only	
A4T	SAE 4	02-160741
A6T	SAE 6	02-160742
A2G	1/4" BSPP	02-160739
A3G	3/8" BSPP	02-160740
S4T	SAE 4	02-160745
S6T	SAE 6	02-160746
S2G	1/4" BSPP	02-160743
S3G	3/8" BSPP	02-160744

See section J for housing details.

7 Differential pressure

Note: Code based on pressure in psi

040 - 2,80 bar (40 psi)

080 - 5,50 bar (80 psi)

160 - 11,0 bar (160 psi)

300 - 5.5-20.7 bar(80-300 psi)*

* Only for "P" Adjustment pressure setting, factory set at Max pressure.

8 Special features

00 - No special features

Dimensions

mm (inch)

Cartridge only

Torque cartridge in housing

Aluminum or Steel - 34-41 Nm (25-30 ft lbs)

Installation drawing

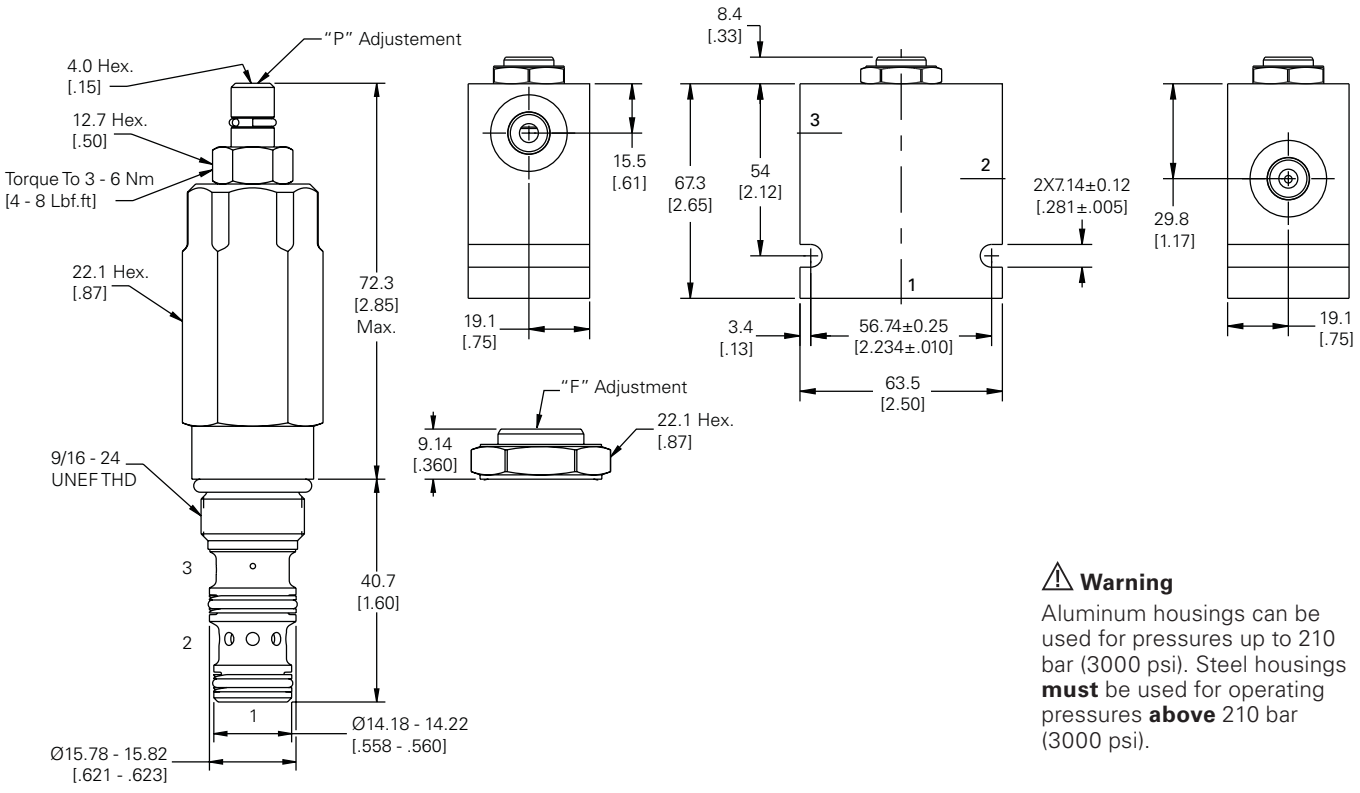

⚠ Warning

Aluminum housings can be used for pressures up to 210 bar (3000 psi). Steel housings **must** be used for operating pressures **above** 210 bar (3000 psi).

Where measurements are critical request certified drawings. We reserve the right to change specifications without notice.

DPS2-10 - Logic element

Differential pressure sense valves
60 L/min (15 USgpm) • 290, 350 bar (4200, 5000 psi)

Functional symbols

See pages I-142 & I-143

Description

These are normally open or closed logic elements with or without a control orifice. They can be used as main valves for the control of high flows using small pilot cartridges, as compensators or load sense elements.

Operation

This valve is used as a main section of a pilot controlled valve assembly. This valve has multiple uses when used with either directional control, flow control or pressure control cartridges. Refer to application examples.

Features

Hardened and ground and honed working components. Cartridge construction for maximum mounting flexibility. Low leakage with poppet valves and 350 bar pressure rating

Sectional view

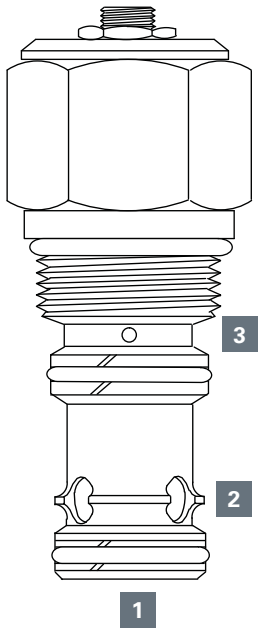

Performance data

Ratings and specifications

Performance data is typical with fluid at 21,8 cSt (105 SUS) and 49° C (120° F)	
Typical application pressure	Spool type: 290 bar (4200 psi) Poppet type: 350 bar (5000 psi)
Rated flow	60 L/min (15 USgpm)
Pilot ratio	Spool type P, V, R, F: 1:1 Poppet type B, S, T: 2:1
Internal leakage	Spool type: 82 cm^3/min. (5 in^3/min) max @ 290 bar (4200 psi) Poppet type: Port 1 to 2:< 5 drops/min max @ 350 bar (5000 psi)
Temperature range	-40° to 120° C (-40° to 248° F)
Cavity	C-10-3S
Standard housing materials	Aluminium
Fluids	All general purpose hydraulics fluids such as: MIL-H-5606, SAE 10, SAE 20 etc
Filtration	Cleanliness code 18/16/13
Weight cartridge only	0,14 kg (0.30 lbs)
Seal kit	889650 (Buna-N), 889652 (Viton®)

Viton is a registered trademark of E.I. DuPont

Pressure drop curve

Cartridge only

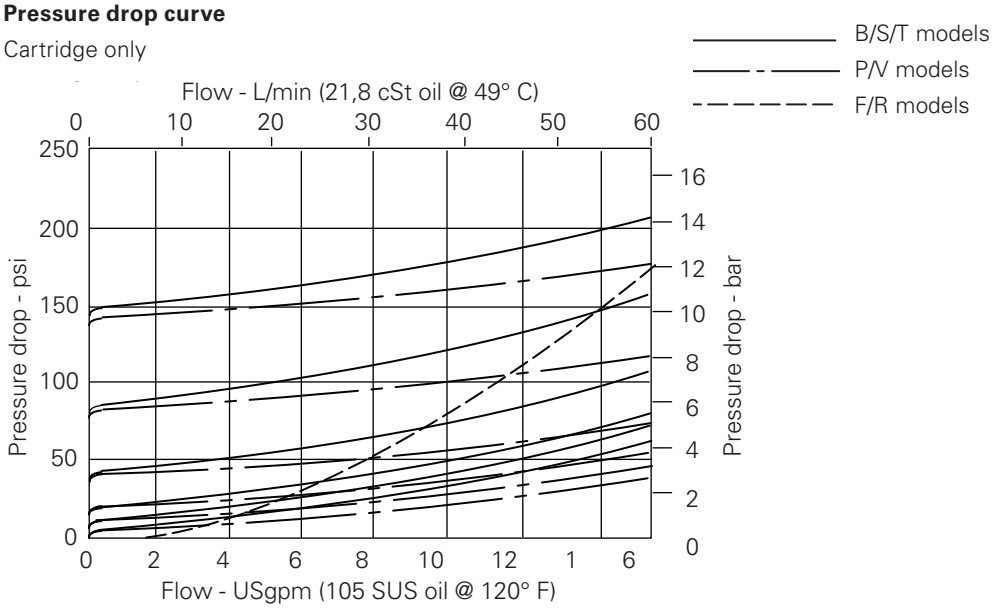

Where measurements are critical request certified drawings. We reserve the right to change specifications without notice.

DPS2-10 - Logic element

Differential pressure sense valves
60 L/min (15 USgpm) • 290, 350 bar (4200, 5000 psi)

Model code

DPS2 – 10 (V) – * – * – ** – * – **

1 2 3 4 5 6 7 8

1 Function

DPS2 - Differential pressure sensing

2 Size

10 - 10 size

3 Seal material

Blank - Buna-N
V - Viton®

4 Function

B - Poppet, vent to open, N/C
S - Poppet, vent to open, N/C
T - Poppet, bi-directional, pilot to close, 2:1 ratio, N/C
P - Spool, N/C (L/S element)
V - Spool, N/C
R - Spool, pressure reducing, N/O
F - Spool, flow control, N/O (hydrostat)

5 Adjustment

F - None
P - Stroke adjustments

"S" adjustment is not available with F and R functions.

Code	Port size	Housing number
		Aluminium
3B	3/8" BSPP	02-175470*
6T	SAE 6	566413
6H	SAE 6	876706
8H	SAE 8	876712
2G	1/4" BSPP	876707
3G	3/8" BSPP	876710

* Light duty housing
See section J for housing details.

6 Port size

0 - Cartridge only

7 Differential pressure

Note: Code based on pressure in psi
005 - 0,35 bar (5 psi)+ *
010 - 0,7 bar (10 psi)+ *
020 - 1,40 bar (20 psi)+*
040 - 2,80 bar (40 psi)
080 - 5,50 bar (80 psi)
160 - 11,0 bar (160 psi)

+ Not available with the "B", "S" and "T" poppet.
* The operating back pressure at port 3 should never be less than 1.3 times the spring set pressure.

8 Special features

00 - No special features

Dimensions

mm (inch)

Cartridge only

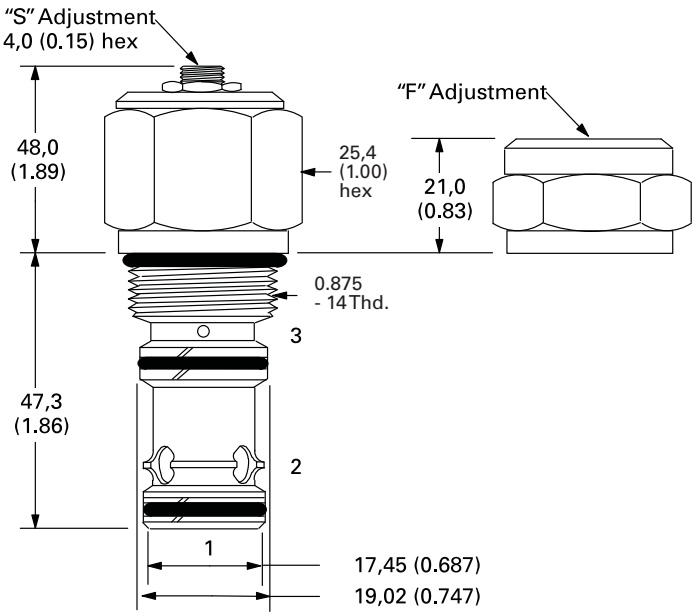

Torque cartridge in housing

A - 47-54 Nm (35-40 ft lbs)
S - 68-75 Nm (50-55 ft lbs)

Installation drawing

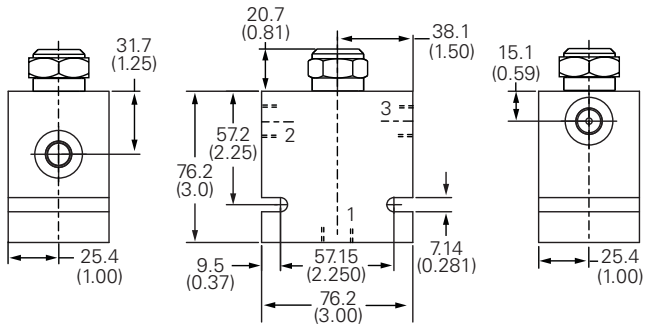

⚠ Warning

Aluminum housings can be used for pressures up to 210 bar (3000 psi). Steel housings **must** be used for operating pressures **above** 210 bar (3000 psi).

Where measurements are critical request certified drawings. We reserve the right to change specifications without notice.

DPS2-12 - Logic element

Differential pressure sense valves
114 L/min (30 USgpm) • 350 bar (5000 psi)

Functional symbols

See pages I-142 & I-143

Operation

This valve is used as a main section of a pilot controlled valve assembly. This valve has multiple uses when used with either directional control, flow control or pressure control cartridges. Refer to application examples.

Features

Hardened and ground and honed working components. Cartridge construction for maximum mounting flexibility. Low leakage with poppet valves and 350 bar pressure rating

Sectional view

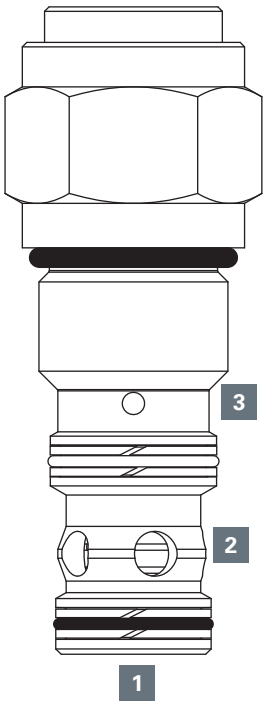

Performance data

Ratings and specifications

Performance data is typical with fluid at 21,8 cSt (105 SUS) and 49° C (120° F)	
Typical application pressure	Spool and Poppet type: 350 bar (5000 psi)
Rated flow	114 L/min (30 USgpm)
Pilot ratio	Spool type P, V, R, F: 1:1 Poppet type B, S, T: 2:1
Internal leakage	Spool type: 82 cm^3/min. (5 in^3/min) max @ 350 bar (5000 psi) Poppet type: 5 drops/min @ 5000 psi
Temperature range	-40° to 120° C (-40° to 248° F)
Cavity	C-12-3S
Standard housing materials	Aluminium or steel
Fluids	All general purpose hydraulics fluids such as: MIL-H-5606, SAE 10, SAE 20 etc
Filtration	Cleanliness code 18/**16/13**
Weight cartridge only	0,31 kg (0.68 lbs)

Description

These are normally open or closed logic elements with or without a control orifice. They can be used as main valves for the control of high flows using small pilot cartridges, as compensators or load sense elements.

Pressure drop curve

Cartridge only

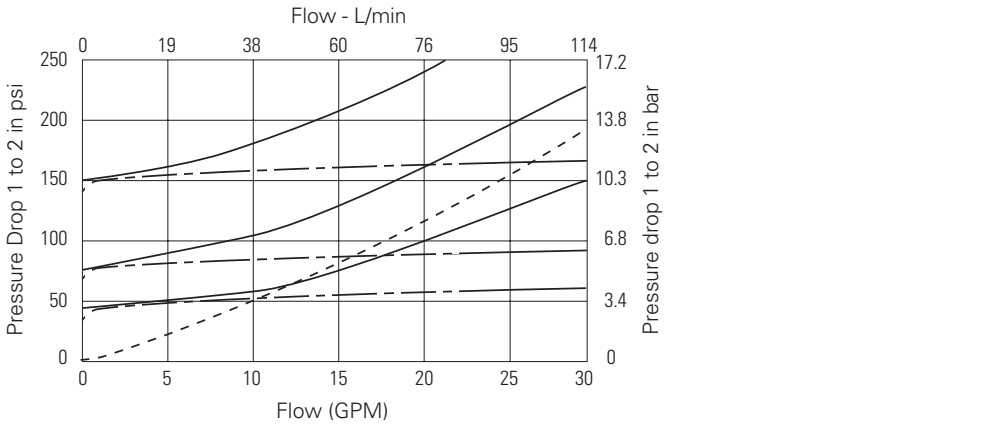

Where measurements are critical request certified drawings. We reserve the right to change specifications without notice.

DPS2-12 - Logic element

Differential pressure sense valves
114 L/min (30 USgpm) • 350 bar (5000 psi)

Model code

DPS2 – 12 (V) – * – F – ** – * – **

1 2 3 4 5 6 7 8

1 Function
DPS2 - Differential pressure sensing

2 Size
12 - 12 size

3 Seal material
Blank - Buna-N
V - Viton®

4 Function
B - Poppet, vent to open, N/C
S - Poppet, vent to open, N/C
T - Poppet, bi-directional, pilot to close, 2:1 ratio, N/C
P - Spool, N/C (L/S element)
V - Spool, N/C
R - Spool, pressure reducing, N/O
F - Spool, flow control, N/O (hydrostat)

5 Adjustment
F - None

6 Port size
0 - Cartridge only

Code	Housing number	Port 1 & 2	Port 3
(A)10T	02-178268	SAE 10	SAE 6
(A)12T	02-178269	SAE 12	SAE 6
(A)4G	02-178270	1/2" BSPP	3/8" BSPP
(A)6G	02-178271	3/4" BSPP	3/8" BSPP
(S)10T	02-160996	SAE 10	SAE 6
(S)12T	02-160997	SAE 12	SAE 6
(S)4G	02-160994	1/2" BSPP	3/8" BSPP
(S)6G	02-160995	3/4" BSPP	3/8" BSPP

See section J for housing details.

7 Differential pressure
Note: Code based on pressure in psi
040 - 2,80 bar (40 psi)
080 - 5,50 bar (80 psi)
160 - 11,0 bar (160 psi)

8 Special features
00 - No special features

Dimensions
mm (inch)

Torque cartridge in housing
A - 81-95 Nm (60-70 ft lbs)
S - 102-115 Nm (75-85 ft lbs)

Cartridge only

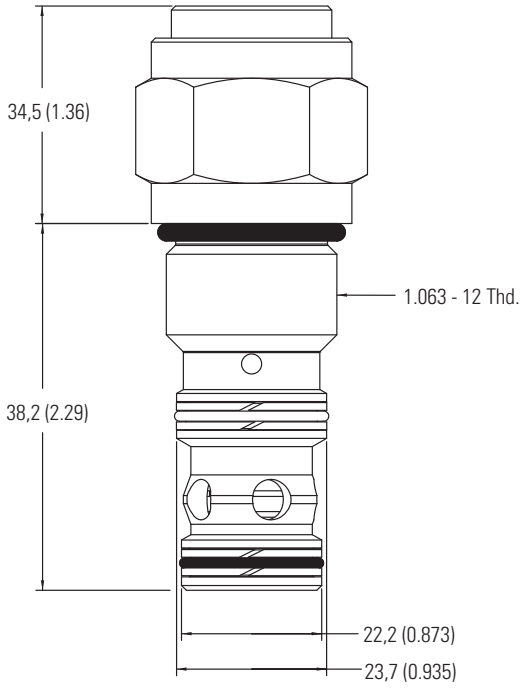

Installation drawing (steel)

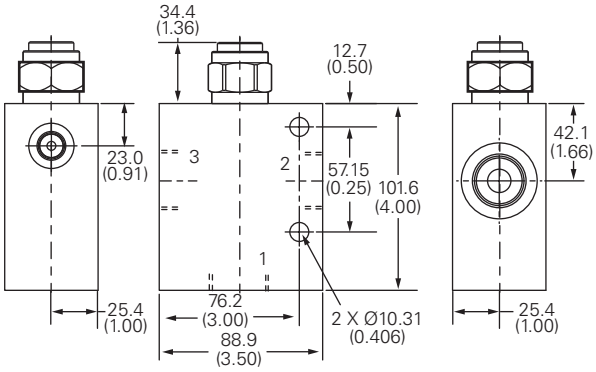

⚠ Warning
Aluminum housings can be used for pressures up to 210 bar (3000 psi). Steel housings **must** be used for operating pressures **above** 210 bar (3000 psi).

Where measurements are critical request certified drawings. We reserve the right to change specifications without notice.

DPS2-16 - Logic element

Differential pressure sense valves
189 L/min (50 USgpm) • 210, 350 bar (3000, 5000 psi)

Functional symbols

See pages I-142 & I-143

Operation

This valve is used as a main section of a pilot controlled valve assembly. This valve has multiple uses when used with either directional control, flow control or pressure control cartridges. Refer to application examples.

Features

Hardened and ground and honed working components. Cartridge construction for maximum mounting flexibility. Low leakage with poppet valves and 350 bar pressure rating

Sectional view

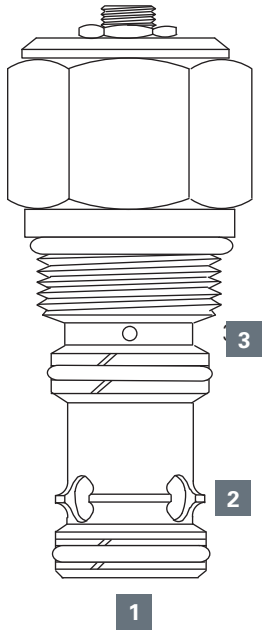

Performance data

Ratings and specifications

Performance data is typical with fluid at 21,8 cSt (105 SUS) and 49° C (120° F)	
Typical application pressure	Spool type: 290 bar (4200 psi) Poppet type: 210 bar (3000 psi) or 350 bar (5000 psi)
Rated flow	189 L/min (50 USgpm)
Pilot ratio	Spool type P, V, R, F: 1:1
Internal leakage	Poppet type B, S, T: 2:1
Temperature range	spool type: 82 cm^3/min. (5 in^3/min) max @ 290 bar (4200 psi) poppet type: Port 1 to 2:< 5 drops/min max @ 350 bar (5000 psi)
Cavity	-40° to 120° C (-40° to 248° F)
Standard housing materials	C-16-3S
Fluids	Aluminium
Filtration	All general purpose hydraulics fluids such as: MIL-H-5606, SAE 10, SAE 20 etc
Weight cartridge only	Cleanliness code 18/**16/13**
Seal kit	0,35 kg (0.78 lbs)
	889659 (Buna-N), 02-165871 (Viton®)

Viton is a registered trademark of E.I. DuPont

Description

These are normally open or closed logic elements with or without a control orifice. They can be used as main valves for the control of high flows using small pilot cartridges, as compensators or load sense elements.

Pressure drop curve

Cartridge only

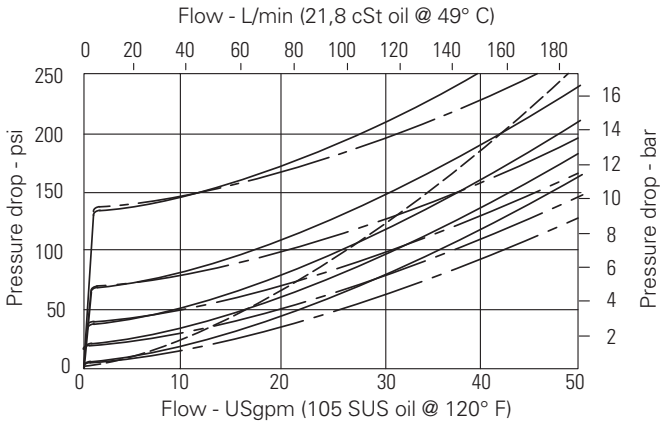

Where measurements are critical request certified drawings. We reserve the right to change specifications without notice.

DPS2-16 - Logic element

Differential pressure sense valves
189 L/min (50 USgpm) • 210, 350 bar (3000, 5000 psi)

Model code

DPS2 – 16 (V) – * – * – ** – *** – **

1 2 3 4 5 6 7 8

1 Function

DPS2 - Differential pressure sensing

2 Size

16 - 16 size

3 Seal material

Blank - Buna-N

V - Viton®

4 Function

B - Poppet, vent to open, N/C
S - Poppet, vent to open, N/C
T - Poppet, bi-directional, pilot to close, 2:1 ratio, N/C
P - Spool, N/C (L/S element)
V - Spool, N/C
R - Spool, pressure reducing, N/O
F - Spool, flow control, N/O (hydrostat)

5 Port size

0 - Cartridge only

Code	Port size	Housing number
		Aluminium
4B	3/4" BSPP	02-175471*
12T	SAE 12	566414*
10H	SAE 10	876725
12H	SAE 12	876727
4G	1/2" BSPP	02-160676
6G	3/4" BSPP	876726

* Light duty housing
See section J for housing details.

6 Stroke adjustment

F - None
S - Stroke adjustments

"S" adjustment is not available with F and R functions.

7 Differential pressure

Note: Code based on pressure in psi
005 - 0,35 bar (5 psi)+*
020 - 1,40 bar (20 psi)+*
040 - 2,80 bar (40 psi)
080 - 5,50 bar (80 psi)
160 - 11,0 bar (160 psi)

+ Not available with the "B", "S" and "T" poppet.
* The operating back pressure at port 3 should never be less than 1.3 times the spring set pressure.

8 Special features

00 - 210 bar (3000 psi) rated valve
AA - 350 bar (5000 psi) rated valve (poppet type only).

(Only required if valve has special features, omit if "00".)

Dimensions

mm (inch)

Cartridge only

Torque cartridge in housing

A - 108-122 Nm (80-90 ft lbs)
S - 136-149 Nm (100-110 ft lbs)

Installation drawing

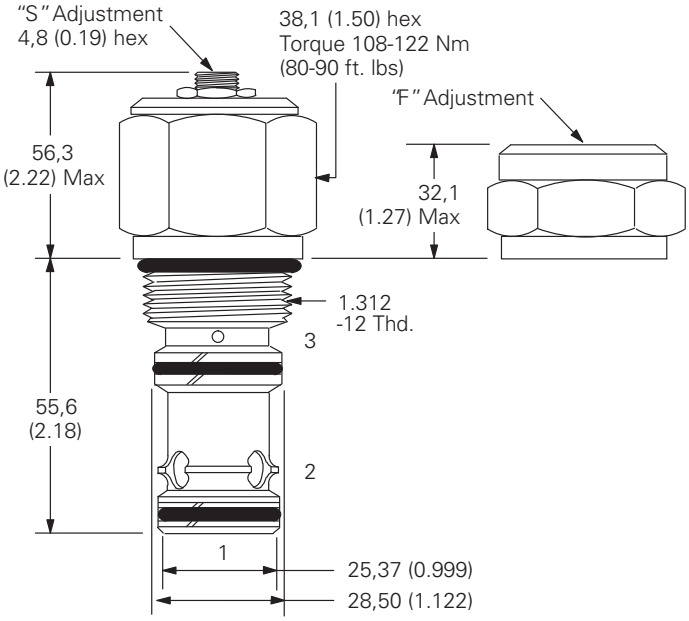

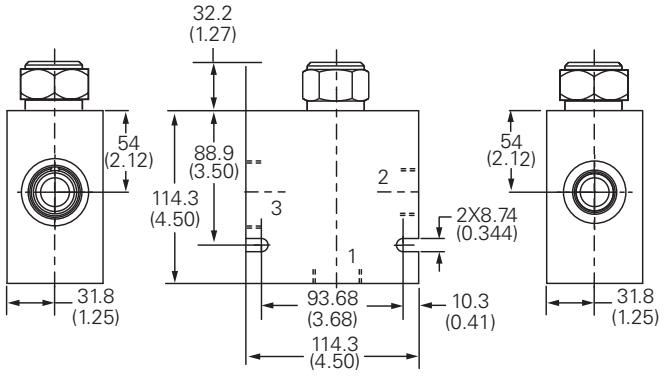

⚠ Warning

Aluminum housings can be used for pressures up to 210 bar (3000 psi). Steel housings **must** be used for operating pressures **above** 210 bar (3000 psi).

Where measurements are critical request certified drawings. We reserve the right to change specifications without notice.

DPS2-20 - Logic element

Differential pressure sense valves
303 L/min (80 USgpm) • 210, 350 bar (3000, 5000 psi)

Functional symbols

See pages I-142 & I-143

Operation

This valve is used as a main section of a pilot controlled valve assembly. This valve has multiple uses when used with either directional control, flow control or pressure control cartridges. Refer to application examples.

Features

Hardened and ground and honed working components. Cartridge construction for maximum mounting flexibility. Low leakage with poppet valves and 350 bar pressure rating.

Sectional view

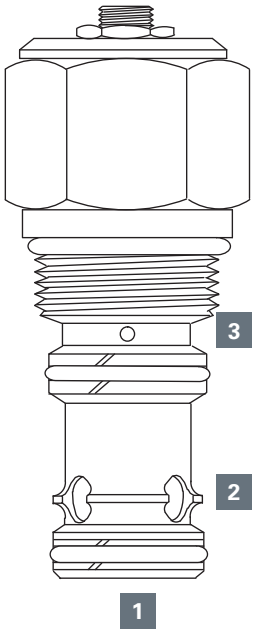

Performance data

Ratings and specifications

Performance data is typical with fluid at 21,8 cSt (105 SUS) and 49° C (120° F)	
Typical application pressure	Spool type: 290 bar (4200 psi) Poppet type: 210 bar (3000 psi) or 350 bar (5000 psi)
Rated flow	303 L/min (80 USgpm)
Pilot ratio	Spool type P, V, R, F: 1:1
Internal leakage	Poppet type B, S, T: 2:1
Temperature range	Spool type: 82 cm^3/min. (5 in^3/min) max @ 290 bar (4200 psi) Poppet type: Port 1 to 2:< 5 drops/min max @ 350 bar (5000 psi)
Cavity	-40° to 120° C (-40° to 248° F)
Standard housing materials	C-20-3S
Fluids	Aluminium
Filtration	All general purpose hydraulics fluids such as: MIL-H-5606, SAE 10, SAE 20 etc
Weight cartridge only	Cleanliness code 18/**16/13**
Seal kit	0,81 kg (1.78 lbs)
	02-113153 (Buna-N), 02-112969 (Viton®)

Viton is a registered trademark of E.I. DuPont

Description

These are normally open or closed logic elements with or without a control orifice. They can be used as main valves for the control of high flows using small pilot cartridges, as compensators or load sense elements.

Pressure drop curve

Cartridge only

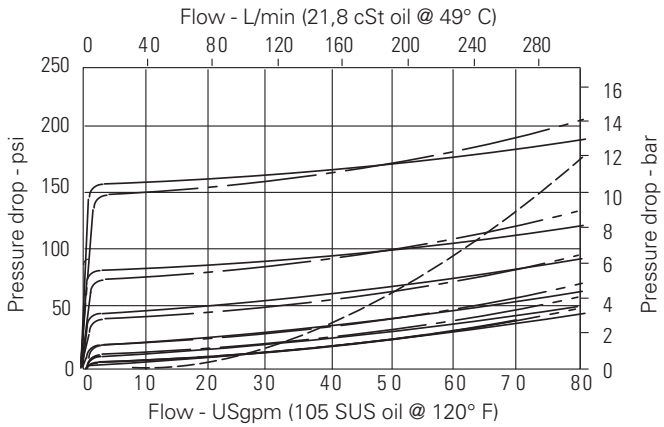

Where measurements are critical request certified drawings. We reserve the right to change specifications without notice.

DPS2-20 - Logic element

Differential pressure sense valves
303 L/min (80 USgpm) • 210, 350 bar (3000, 5000 psi)

Model code

DPS2 – 20 (V) – * – * – ** – *** – **

1 2 3 4 5 6 7 8

1 Function

DPS2 - Differential pressure sensing

Size

20 - 20 size

3 Seal material

Blank - Buna-N
V - Viton®

4 Function

B - Poppet, vent to open, N/C
S - Poppet, vent to open, N/C
T - Poppet, bi-directional, pilot to close, 2:1 ratio, N/C
P - Spool, N/C (L/S element)
V - Spool, N/C
R - Spool, pressure reducing, N/O
F - Spool, flow control, N/O (hydrostat)

5 Port size

0 - Cartridge only

Code	Port size	Housing number
		Aluminium
8B	1" BSPP	02-175472*
16T	SAE 16	566415*
12H	SAE 12	876741
16H	SAE 16	876743
6G	3/4" BSPP	876740
8G	1" BSPP	876742

* Light duty housing
See section J for housing details.

6 Stroke adjustment

F - None (Fixed stroke)
S - Screw adjustment

Screw adjustment is not available with F and R functions.

7 Differential pressure

Note: Code based on pressure in psi
005 - 0,35 bar (5 psi)+*
10 - 0,7 bar (10 psi)+*
20 - 1,40 bar (20 psi)+*
40 - 2,80 bar (40 psi)
80 - 5,50 bar (80 psi)
160 - 11,0 bar (160 psi)
+ Not available with the "B", "S" and "T" poppet.
* The operating back pressure at port 3 should never be less than 1.3 times the spring set pressure.

8 Special features

00 - 210 bar (3000 psi) rated valve
AA - 350 bar (5000 psi) rated valve (poppet type only).

(Only required if valve has special features, omit if "00".)

Dimensions

mm (inch)

Cartridge only

Torque cartridge in housing
A - 128-155 Nm (95-115 ft lbs)
S - 163-183 Nm (120-135 ft lbs)

Note: For application at 350 bar (5000 psi) torque into steel housing to 205-218 Nm (150-160 ft. lbs) (for valves with "AA" special feature only).

Installation drawing

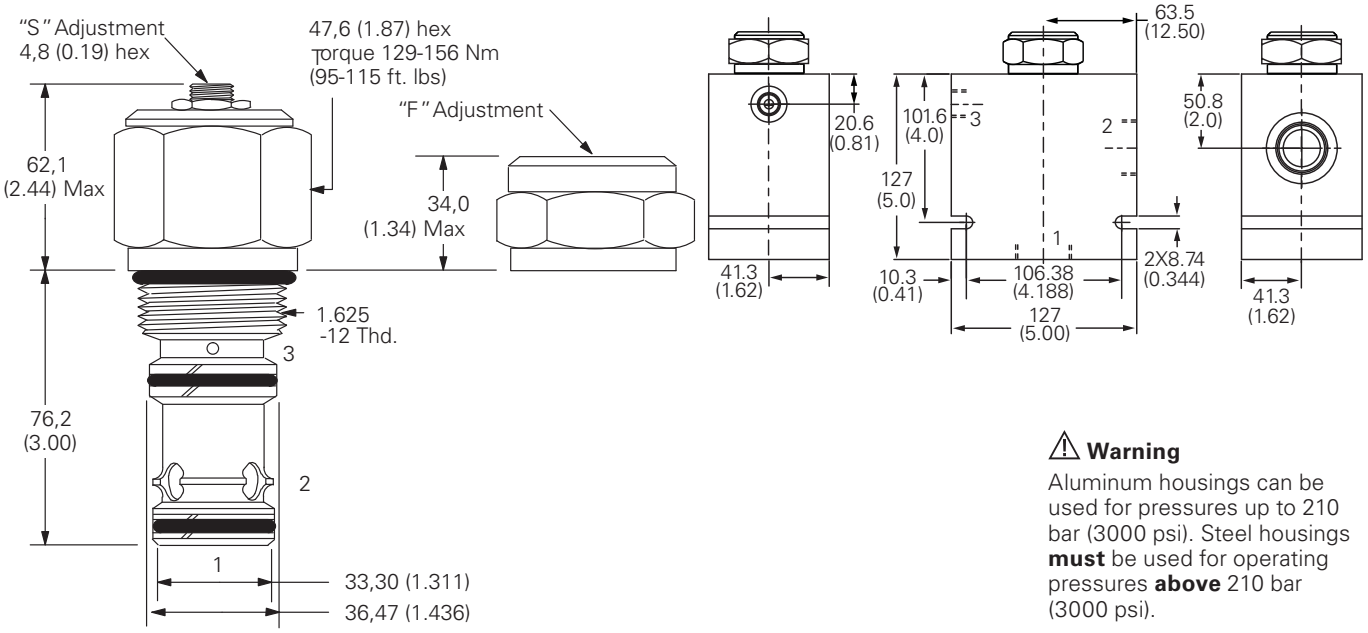

⚠ Warning

Aluminum housings can be used for pressures up to 210 bar (3000 psi). Steel housings **must** be used for operating pressures **above** 210 bar (3000 psi).

Where measurements are critical request certified drawings. We reserve the right to change specifications without notice.

DPS2

Spool type functional symbols

DPS2--P-S**

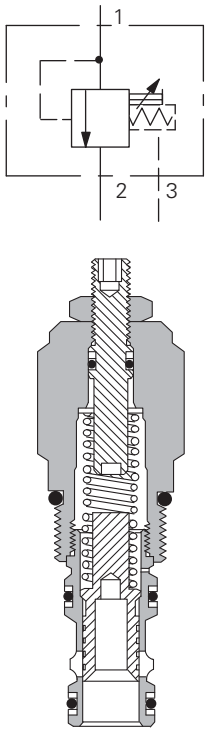

DPS2--P-F**

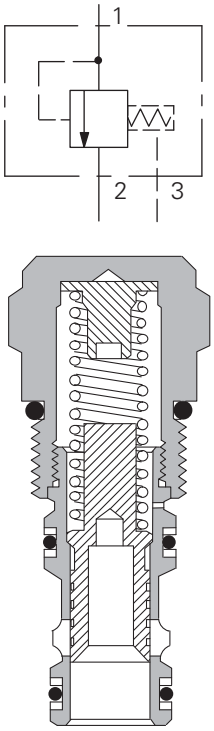

DPS2--V-S**

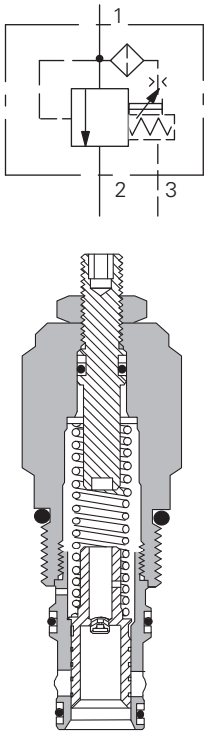

DPS2--V-F**

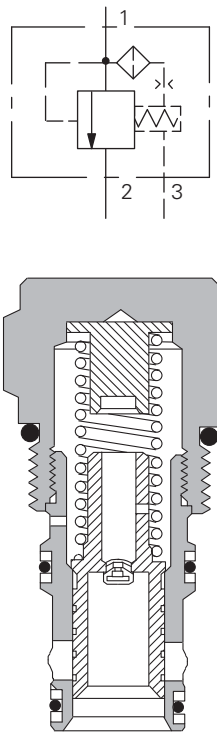

DPS2--F-F**

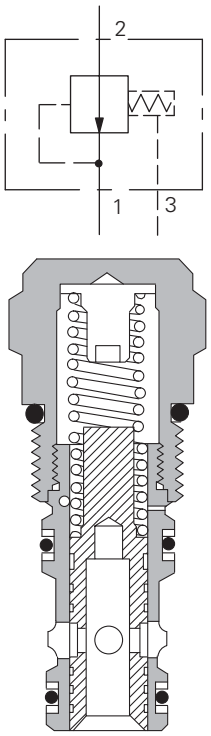

DPS2--R-F**

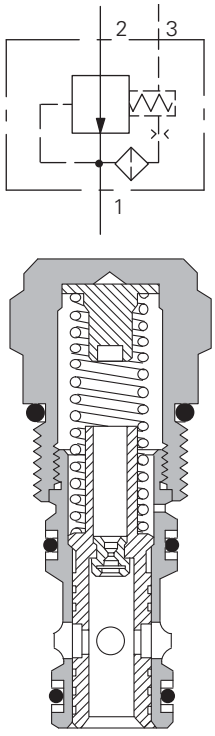

Where measurements are critical request certified drawings. We reserve the right to change specifications without notice.

DPS2--B-S**

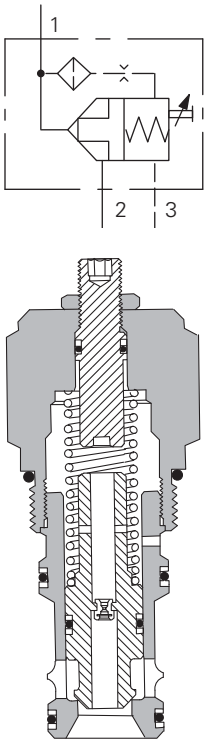

DPS2--B-F**

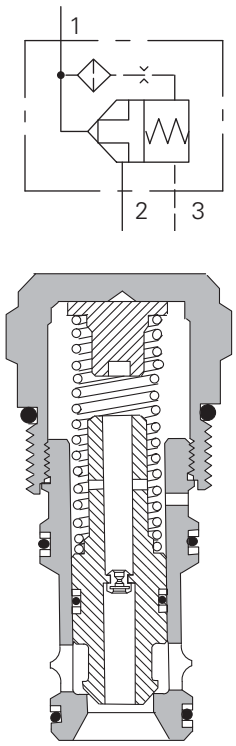

DPS2--S-S**

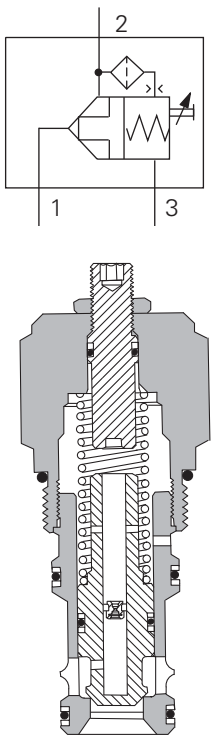

DPS2--S-F**

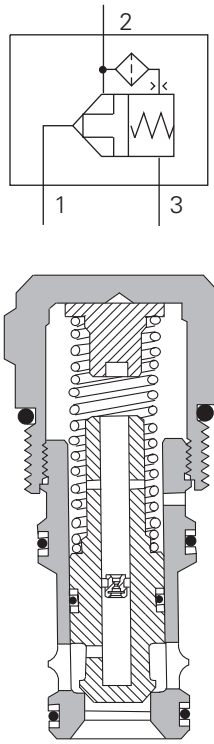

DPS2--T-S**

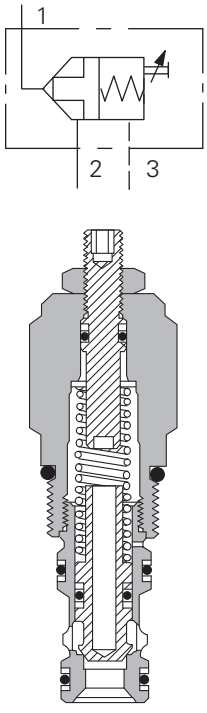

DPS2--T-F**

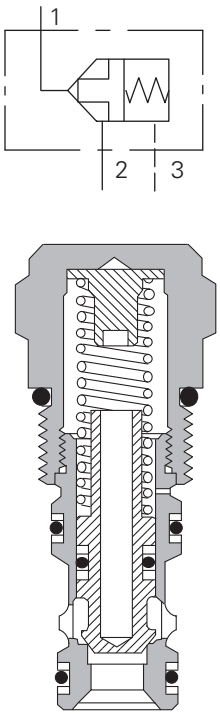

Where measurements are critical request certified drawings. We reserve the right to change specifications without notice.

LE402 - Logic element

Spool type with control cartridge cavity
350 L/min (95 USgpm) • 350 bar (5000 psi)

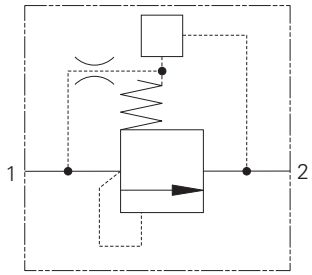

Operation

With a pilot valve fitted the valve will only open when flow is allowed across the orifice in the middle of the spool. Flow passing across this orifice will cause there to be a pressure difference that acts over the full area of the spool to move it back against the spring that biases it closed. By controlling the pressure in the spring chamber you can control the pressure at which the valve opens.

Features

Very versatile in its application using hardened and ground spool and sleeve giving minimal internal leakage and long life.

High flow and pressure rating increases the variety of applications into which it can fit.

Sectional view

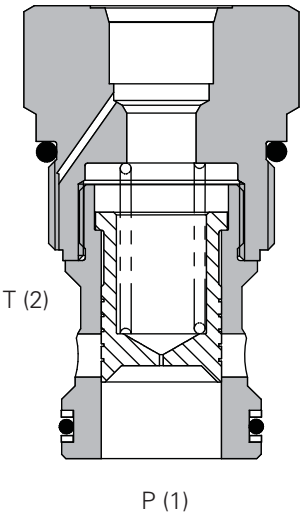

Performance data

Ratings and specifications

Performance data is typical with fluid at 32,0 cST (150 SUS)	
Figures based on oil temperature of 40° C and viscosity of 40 cSt	
Rated Flow	350 liters/min (95 USgpm)
Maximum load induced pressure	P1: 350 bar (5000 psi), P2: 210 bar (3000 psi)
Cartridge material	Working parts hardened and ground steel. External surfaces zinc plated
Body material	Standard aluminum (up to 210 bar*). Add suffix '377' for steel option
Mounting position	Unrestricted
Cavity number	C-20-2 (see Section M)
Torque cartridge into cavity	60 Nm (44 lbs. ft.)
Weight	LE402: 0.29 kg (0.63 lbs), LE452: 1.35 kg (2.97 lbs)
Seal kit number	SK633 (Nitrile), SK633V (Viton®) Viton is a registered trademark of E. I. DuPont
Recommended Filtration Level	BS5540/4 Class 18/**16/13** (25 micron nominal)
Operating temperature	–30° to +90° C (–22° to 194° F)
Leakage	Up to 350 ml/min nominal
Nominal viscosity range	5 to 500 cSt

Description

For use in conjunction with pilot valves to allow control of larger flows. When used with a 2/2 solenoid valve the combination allows control of flows to 350 lts/min (95 US gpm). With a pilot relief valve or a proportional relief valve the element becomes a high flow pilot style relief. With a needle valve an on/off function is achieved. The outlet flow would normally go to tank because back pressure will act on the pilot cartridge to increase the switching pressure.

Pressure drop curve

Free flow 1-2

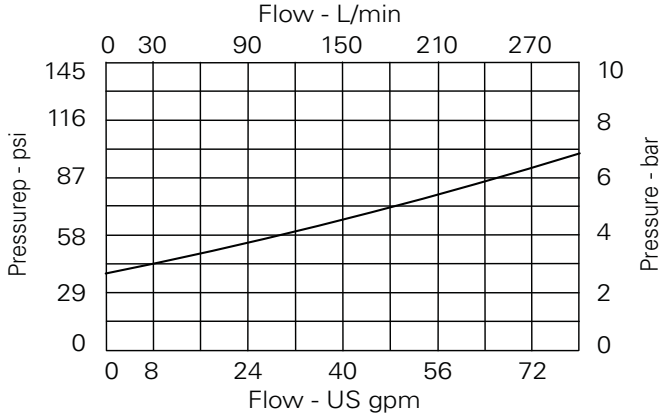

Where measurements are critical request certified drawings. We reserve the right to change specifications without notice.

LE402 - Logic element

Spool type with control cartridge cavity
350 L/min (95 USgpm) • 350 bar (5000 psi)

Model code

LE4 ** – **N** – **0.2** – **1DR2-P-40S** – **10W**

1 2 3 4 5

1 Basic code

LE402 - Cartridge (logic Element)

LE452 - Cartridge (Logic Element) and body

2 Seals

N - Nitrile (for use with most industrial hydraulic oils)
V - Viton® (for high temperature & most special fluid applications)

3 Spring

0.2 - 1.75

4 Pilot cartridge

Blank - None
1DR2-P-40S - See pg E-100
PDR21AN*6** - See pg B-270
S207N - See pg A-280

5 Port size

Omit - Cartridge only

Code	Port size	Aluminum	Steel
10W	1-1/4" BSPP	C24005	C24006
12W	1-1/2" BSPP	C24007	C24008
20T	1-1/4" SAE	C24011	C24012
24T	1-1/2" SAE	C24013	C24014

Dimensions

mm (inch)

Cartridge only

Basic Code: LE402

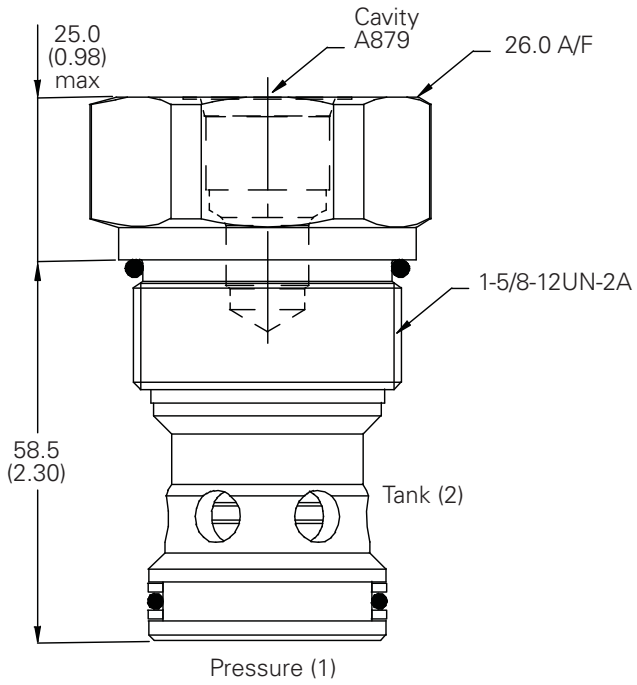

Installation drawing

Basic Code: LE452 1 1/4" 1/2" Ports

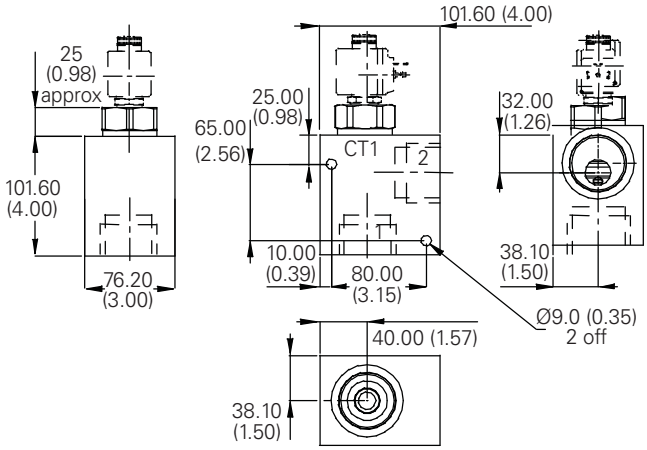

Where measurements are critical request certified drawings. We reserve the right to change specifications without notice.

LEV402 - Logic element

Spool type with control cartridge cavity
Up to 400 L/min (100 USgpm) • 250 bar (3500 psi)

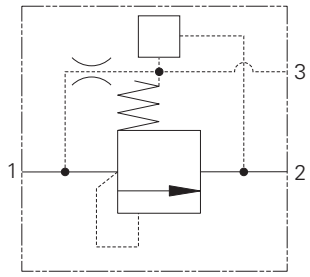

Operation

With a pilot valve fitted the valve will only open when flow is allowed across the orifice in the middle of the spool. Flow passing across this orifice will cause there to be a pressure difference that acts over the full area of the spool to move it back against the spring that biases it closed.

By controlling the pressure in the spring chamber you can control the pressure at which the valve opens.

The vent port can be used as a remote control port to provide two pressure operation or a dump facility.

Features

Very versatile in its application using hardened and ground spool and sleeve giving minimal internal leakage and long life. High flow and pressure rating increases the variety of applications into which it can fit.

With small modifications to the spool the valve can be used in load sensing circuits or as a compensator for by-pass pressure compensated flow controls.

Sectional view

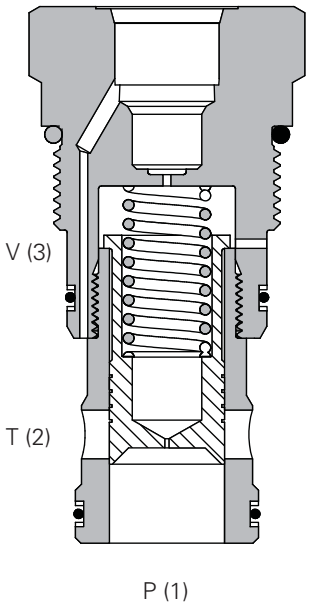

Performance data

Ratings and specifications	
Performance data is typical with fluid at 32,0 cST (150 SUS)	
Figures based on oil temperature of 40° C and viscosity of 40 cSt	
Rated Flow	400 liters/min (100 USgpm)
Maximum working pressure	P1 and P2: 250 bar (3500 psi), P3: 210 bar (3000 psi)
Cartridge material	Working parts hardened and ground steel. External surfaces zinc plated
Body material	Standard aluminum (up to 210 bar*). Add suffix '377' for steel option
Mounting position	Unrestricted
Cavity number	A21773 (see Section M)
Torque cartridge into cavity	150 Nm (110 lbs. ft.)
Weight	LEV402: 0.70 kg (1.54 lbs), LEV452: 2.54 kg (5.6 lbs)
Seal kit number	SK1232 (Nitrile), SK1232V (Viton®) Viton is a registered trademark of E. I. DuPont
Recommended Filtration Level	BS5540/4 Class 18/**16/13** (25 micron nominal)
Operating temperature	–30° to +90° C (–22° to 194° F)
Leakage	Up to 350 ml/min
Nominal viscosity range	32 cSt
For applications above 210 bar, please consult our technical department or use the steel body option	

Description

For use in conjunction with pilot valves to allow control of larger flows. When used with a 2/2 solenoid valve the combination allows control of flows to 400 lts/min (100 US gpm). With a pilot relief valve or a proportional relief valve the element becomes a high flow pilot style ventable relief. With a needle valve an on/off function is achieved.

The outlet flow would normally go to tank because back pressure will act on the pilot cartridge to increase the switching pressure.

Pressure drop curve

Vented pressure drop

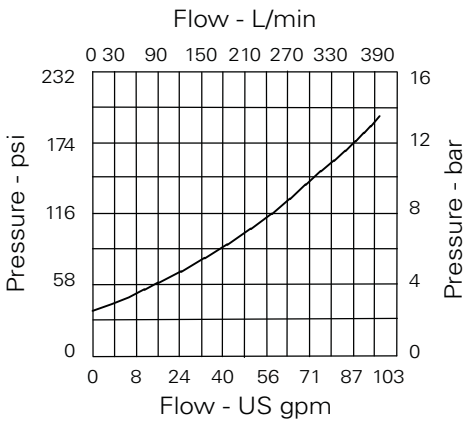

Where measurements are critical request certified drawings. We reserve the right to change specifications without notice.

LEV402 - Logic element

Spool type with control cartridge cavity
Up to 400 L/min (100 USgpm) • 250 bar (3500 psi)

Model code

LEV4 – **N** – **0.2** – **1DR2-P-40S** – **10W**

1 2 3 4 5

1 Basic code

1LEV402 - Cartridge only (Logic Element)
1LEV452 - Cartridge (Logic Element) and body

2 Seals

N - Nitrile (for use with most industrial hydraulic oils)

V - Viton® (for high temperature & most special fluid applications)

3 Spring

0.2 - 2 bar

4 Pilot cartridge

Blank - None
1DR2-P-40S - See pg E-100
PDR21AN*6** - See pg B-270

S207N - See pg A-280

5 Port size

Omit - Cartridge only

Code	Port size	Aluminum	Steel
10W	1-1/4" BSPP, 1/4" BSPP vent	C24005	C24006
12W	1-1/2" BSPP, 1/4" BSPP vent	C24007	C24008
20T	1-1/4" SAE, 1/4" SAE vent	C24011	C24012
24T	1-1/2" SAE, 1/4" SAE vent	C24013	C24014

Dimensions

mm (inch)

Cartridge only

Basic Code: LEV402

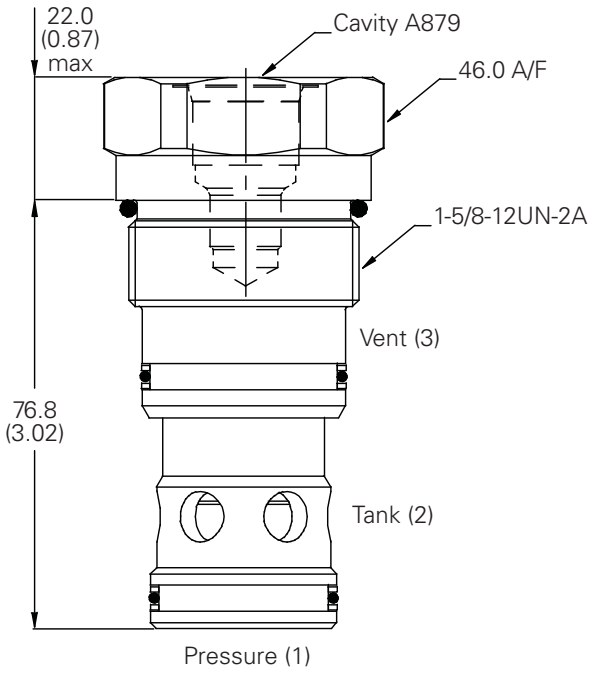

Installation drawing

Basic Code: LEV452 1 1/4" 1/2" Ports

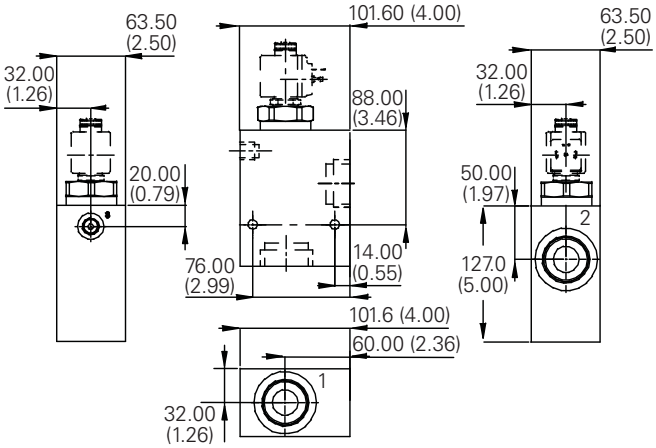

Where measurements are critical request certified drawings. We reserve the right to change specifications without notice.





EATON
Powering Business Worldwide

Wide range of solutions

Industry leading vane, piston, gear and geroter pumps and motors from Vickers®, Eaton®, Char-Lynn® and Hydrokraft® offer you hydraulic power components that are built tough for demanding industrial applications – because uptime is critical in your busy world.

For more information,
visit http://www.eaton.com/hydraulics/ait

Housings and miscellaneous parts

Standard and special valve housings, orifice disks, orifice sizing charts, pilot pistons, adapters, adjustment kits and seal kits

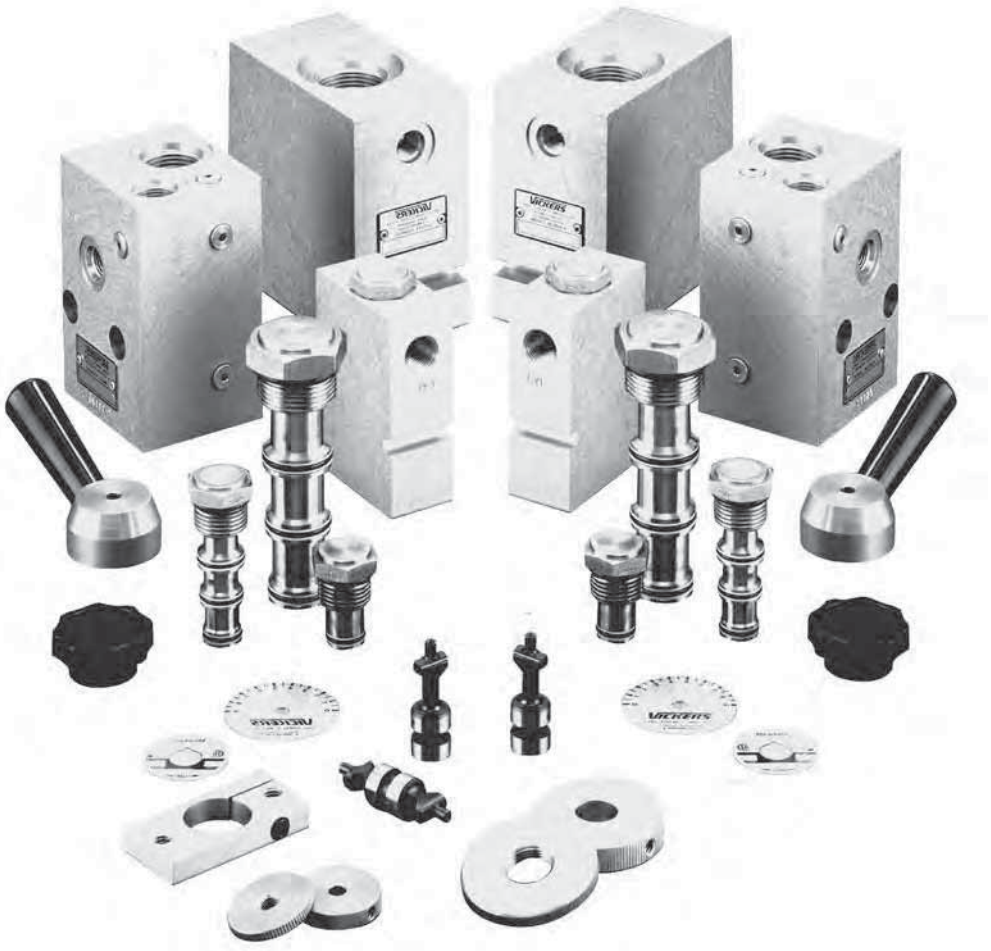

Powering Business Worldwide

Housing & miscellaneous parts

C-**-2 ..... J-4
C-**-3/3S J-7
C-**-3 ..... J-9
C-**-3S J-10
C-16-3S J-11
C-**-4 ..... J-12
C-**-5S J-15
PORT DIMENSIONS J-16
CAVITY PLUGS J-17
ECF - PRESSURE FILTERS J-19
ORIFICE DISCS J-21
ORIFICE DISC - SIZING GUIDE (MM) J-22
ORIFICE DISC - SIZING GUIDE (INCHES) J-23
PILOT PISTONS J-24
SENSING CHECK/PANEL MOUNT ADAPTER J-25
MISCELLANEOUS PARTS J-26
ADJUSTMENT KITS J-27
1HP7 - HAND PUMP J-29
1HP10 - HAND PUMP J-31
1T162W6S - PRESSURE INTENSIFIER J-33

C-**-2

Aluminum housings (light duty)

Housing	Ports 1 & 2	Part number	Code
C–10–2	3/8" BSPP SAE 6	02-175462 566151	(A)3B (A)6T
C–16–2	3/4" BSPP SAE 12	02-175463 566149	(A)6B (A)12T
C–20–2	1" BSPP SAE 16	02-175464 566409	(A)8B (A)16T

Notes: BSPP porting is designated by "B" in the model code SAE porting is designated by "T" in the model code.

Light duty aluminum housings are intended for applications up to 210 bar (3000 psi) with light to moderate duty cycles.

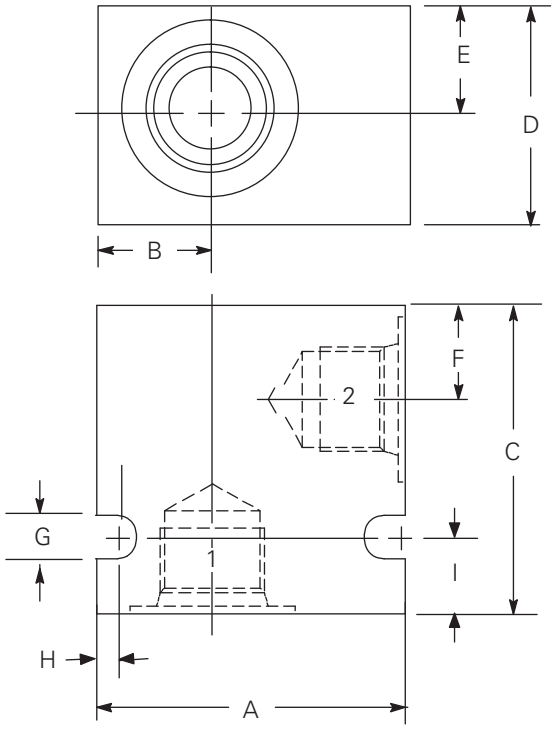

Dimensions	A	B	C	D	E	F	G	H	I	Mass
mm (inch)										kg (lb)
C-10-2	50,8 (2.00)	19,0 (0.75)	50,8 (2.00)	31,7 (1.25)	15,9 (0.62)	19,0 (0.75)	7,1 (0.28)	3,1 (0.12)	12,7 (0.50)	0,1 (0.35)
C-16-2	76,2 (3.00)	28,5 (1.12)	76,2 (3.00)	47,6 (1.87)	23,8 (0.94)	25,4 (1.00)	8,6 (0.34)	4,0 (0.16)	19,0 (0.75)	0,5 (1.21)
C-20-2	88,9 (3.50)	34,3 (1.35)	88,9 (3.50)	68,5 (2.70)	34,3 (1.35)	36,8 (1.45)	8,6 (0.34)	4,0 (0.16)	21,6 (0.85)	0,8 (1.90)

J

Where measurements are critical request certified drawings. We reserve the right to change specifications without notice.

Housing	Ports 1 & 2	Part number	Code
C–8–2	1/4" BSPP	02–160727	(A)2G
	3/8" BSPP	02–160728	(A)3G
	SAE 4	02–160730	(A)4H
	SAE 6	02–160731	(A)6H
	SAE 8	02–160732	(A)8H
C–10–2	1/4" BSPP	876702	(A)2G
	3/8" BSPP	876703	(A)3G
	SAE 6	876700	(A)6H
	SAE 8	876701	(A)8H
C–12–2	1/2" BSPP	02–161118	(A)4G
	3/4" BSPP	02–161117	(A)6G
	SAE 10	02–160640	(A)10H
	SAE 12	02–160644	(A)12H

Housing	Ports 1 & 2	Part number	Code
C–12–2U	1/2" BSPP	02–161116	(A)4G
	3/4" BSPP	02–161115	(A)6G
	SAE 10	02–160641	(A)10H
	SAE 12	02–160645	(A)12H
C–16–2	1/2" BSPP	876716	(A)4G
	3/4" BSPP	876718	(A)6G
	SAE 10	876717	(A)10H
	SAE 12	566113	(A)12H
C–20–2	3/4" BSPP	876732	(A)6G
	1" BSPP	876734	(A)8G
	SAE 12	876733	(A)12H
	SAE 16	876735	(A)16H

Notes: BSPP porting is designated by "G" in the model code SAE porting is designated by either "H"or "T" in the model code.

Fatigue rated aluminum housings are intended for applications up to 210 bar (3000 psi) with harsh duty cycles. These housings have been fatigue rated to NFPA standards to one million cycles.

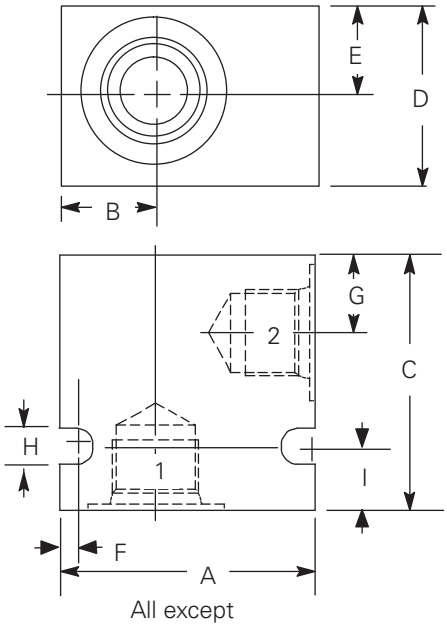

All except
C – 12 – 2(U)

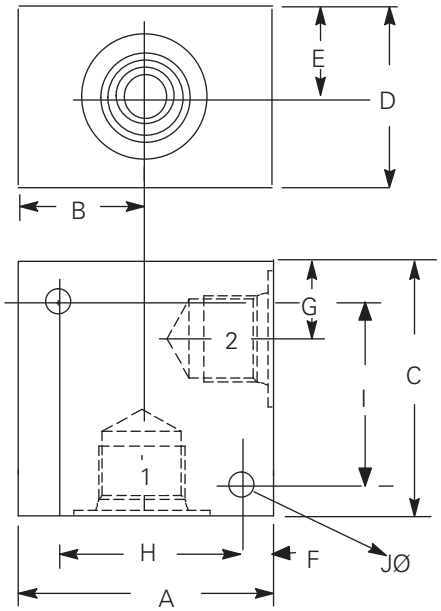

C – 12 – 2(U)

Dimensions	A	B	C	D	E	F	G	H	I	J	Mass
mm (inch)											kg (lb)
C-8-2	50,8 (2.00)	19,0 (0.75)	50,8 (2.00)	38,1 (1.50)	19,0 (0.75)	3,4 (0.13)	15,5 (0.61)	7,1 (0.28)	12,7 (0.50)	7,1 (0.28)	0,2 (0.46)
C-10-2	63,5 (2.50)	25,4 (1.00)	63,5 (2.50)	50,8 (2.00)	25,4 (1.00)	9,5 (0.37)	19,1 (0.75)	7,1 (0.28)	19,1 (0.75)	7,1 (0.28)	0,4 (1.00)
C-12-2(U)	88,9 (3.50)	44,5 (1.75)	88,9 (3.50)	50,8 (2.00)	25,4 (1.00)	12,7 (0.50)	28,7 (1.13)	63,5 (2.50)	63,5 (2.50)	10,3 (0.40)	0,8 (1.96)
C-16-2	88,9 (3.50)	34,9 (1.37)	88,9 (3.50)	63,5 (2.50)	31,8 (1.25)	10,3 (0.40)	28,4 (1.11)	8,7 (0.34)	25,4 (1.00)	10,3 (0.40)	1,2 (2.75)
C-20-2	101,6 (4.00)	38,1 (1.50)	101,6 (4.00)	82,5 (3.25)	41,3 (1.62)	10,3 (0.40)	36,0 (1.41)	8,7 (0.34)	25,4 (1.00)	10,3 (0.40)	1,8 (4.00)

Where measurements are critical request certified drawings. We reserve the right to change specifications without notice.

C-**-2

Steel housings
(NFPA fatigue rated)

Housing	Ports 1 & 2	Part number	Code
C–8–2	1/4" BSPP	02–160733	(S)2G
	3/8" BSPP	02–160734	(S)3G
	SAE 4	02–160736	(S)4T
	SAE 6	02–160737	(S)6T
	SAE 8	02–160738	(S)8T
C–10–2	1/4" BSPP	02–175102	(S)2G
	3/8" BSPP	02–175103	(S)3G
	SAE 6	02–175100	(S)6T
	SAE 8	02–175101	(S)8T
C–12–2	1/2" BSPP	02–172062	(S)4G
	3/4" BSPP	02–169665	(S)6G
	SAE 10	02–169744	(S)10T
	SAE 12	02–169782	(S)12T

Housing	Ports 1 & 2	Part Number	Code
C–12–2U	1/2" BSPP	02–172512	(S)4G
	3/4" BSPP	02–162922	(S)6G
	SAE 10	02–169817	(S)10T
	SAE 12	02–169790	(S)12T
C–16–2	1/2" BSPP	02–175106	(S)4G
	3/4" BSPP	02–175107	(S)6G
	SAE 10	02–175104	(S)10T
	SAE 12	02–175105	(S)12T
C–20–2	3/4" BSPP	02–175110	(S)6G
	1" BSPP	02–175111	(S)8G
	SAE 12	02–175108	(S)12T
	SAE 16	02–175109	(S)16T

Notes: BSPP porting is designated by "G" in the model code SAE porting is designated by "T" in the model code.

Fatigue rated steel housings are intended for applications up to 350 bar (5000 psi) with harsh duty cycles. These housings have been fatigue rated to NFPA standards to one million cycles.

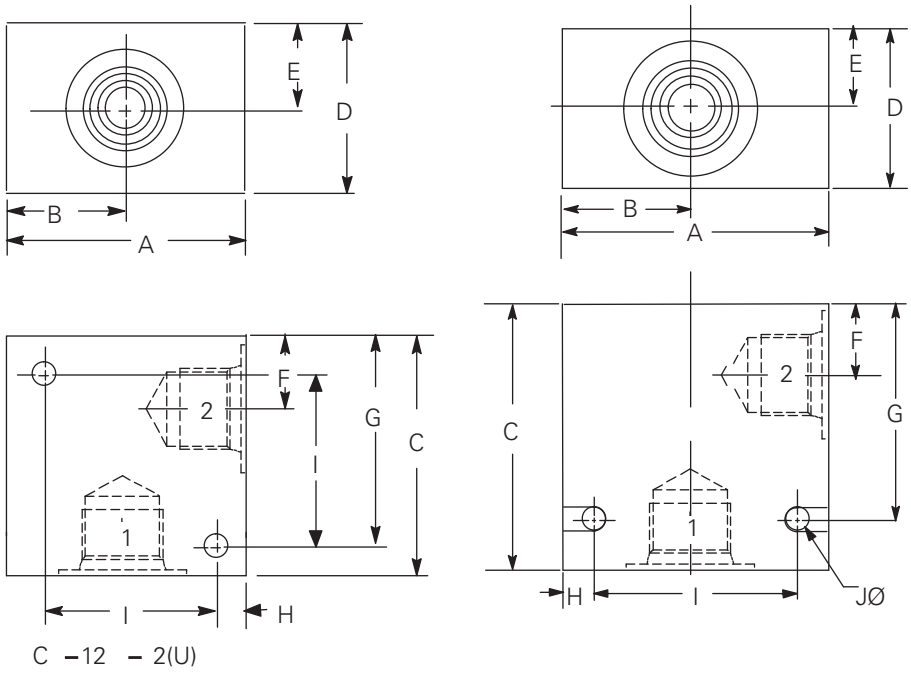

C –12 – 2(U)

Dimensions	A	B	C	D	E	F	G	H	I	J	Mass
mm (inch)											kg (lb)
C-8-2*	50,8 (2.00)	19,0 (0.75)	50,8 (2.00)	38,1 (1.50)	19,1 (0.75)	15,5 (0.61)	38,1 (1.50)	3,3 (0.13)	44,0 (1.73)	7,1 (0.28)	0,5 (1.19)
C-10-2	63,5 (2.50)	25,4 (1.00)	63,5 (2.50)	44,4 (1.75)	22,2 (0.87)	19,0 (0.75)	50,8 (2.00)	9,5 (0.37)	44,4 (1.75)	7,1 (0.28)	0,3 (0.83)
C-12-2(U)	88,9 (3.50)	44,5 (1.75)	88,9 (3.50)	50,8 (2.00)	25,4 (1.00)	28,7 (1.13)	76,2 (3.00)	12,7 (0.50)	63,5 (2.50)	10,3 (0.40)	1,9 (4.28)
C-16-2	88,9 (3.50)	38,1 (1.75)	76,2 (3.00)	50,8 (2.00)	25,4 (1.00)	25,4 (1.00)	63,5 (2.50)	12,7 (0.50)	63,5 (2.50)	10,3 (0.40)	2,2 (5.00)
C-20-2	101,6 (4.00)	40,6 (1.50)	88,9 (3.50)	63,5 (2.50)	31,7 (1.25)	31,7 (1.25)	76,2 (3.00)	12,7 (0.50)	76,2 (3.00)	10,3 (0.40)	3,6 (7.96)

* 8 series housing utilize a slot instead of a mounting hole.

Where measurements are critical request certified drawings. We reserve the right to change specifications without notice.

Housing	Ports 1, 2 & 3	Part number	Code
C–10–3	3/8″ BSPP SAE 6	02–173358 566162	(A)3B (A)6T
C–10–3S	3/8″ BSPP SAE 6	02–175470 566413	(A)3B (A)6T
C–16–3	3/4″ BSPP SAE 12	02–175465 566152	(A)6B (A)12T
C–16–3S	3/4″ BSPP SAE 12	02–175471 566414	(A)6B (A)12T
C–20–3	1″ BSPP SAE 12	02–175466 566408	(A)8B (A)12T
C–20–3S	1″ BSPP SAE 16	02–175472 566415	(A)8B (A)16T

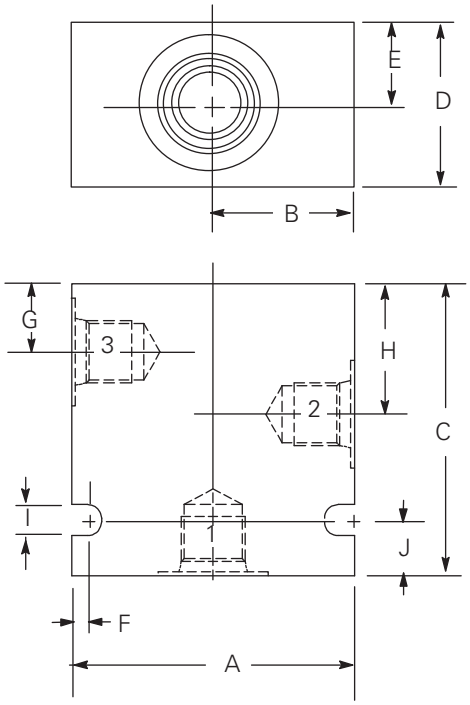

Notes: BSPP porting is designated by "B" in the model code SAE porting is designated by "T" in the model code.

Light duty aluminum housings are intended for applications up to 210 bar (3000 psi) with light to moderate duty cycles.

Dimensions	A	B	C	D	E	F	G	H	I	J	Mass
mm (inch)											kg (lb)
C-10-3	63,5 (2.50)	31,7 (1.25)	66,6 (2.62)	31,7 (1.25)	15,8 (0.62)	3,1 (0.12)	19,0 (0.75)	34,9 (1.37)	7,1 (0.28)	12,7 (0.50)	0,3 (0.64)
C-10-3S	63,5 (2.50)	34,9 (1.37)	69,8 (2.75)	38,1 (1.50)	19,1 (0.75)	3,1 (0.12)	12,7 (0.50)	31,7 (1.25)	7,1 (0.28)	12,7 (0.50)	0,2 (0.51)
C-16-3	101,6 (4.00)	50,8 (2.00)	107,9 (4.25)	50,8 (2.00)	25,4 (1.00)	4,0 (0.16)	25,4 (1.00)	53,9 (2.12)	8,6 (0.33)	25,4 (1.00)	1,0 (2.3)
C-16-3S	88,9 (3.50)	47,6 (1.87)	88,9 (3.50)	60,3 (2.37)	30,1 (1.63)	4,0 (0.16)	17,4 (0.68)	38,1 (1.50)	8,7 (0.34)	19,0 (0.75)	0,7 (1.66)
C-20-3	114,3 (4.50)	57,1 (2.25)	139,7 (5.50)	63,5 (2.50)	31,7 (1.25)	4,0 (0.16)	31,7 (1.25)	72,1 (2.84)	10,4 (0.41)	25,4 (1.00)	1,7 (3.92)
C-20-3S	101,6 (4.00)	57,1 (2.25)	107,9 (4.25)	69,8 (2.75)	34,9 (1.37)	4,0 (0.16)	20,6 (0.81)	50,8 (2.00)	8,7 (0.34)	19,0 (0.75)	1,2 (2.62)

Where measurements are critical request certified drawings. We reserve the right to change specifications without notice.

C-**-3/3S

Aluminum housings (NFPA fatigue rated)

Housing	Ports 1, 2 & 3	Part number	Code
C–8–3	1/4" BSPP	02–160739	(A)2G
	3/8" BSPP	02–160740	(A)3G
	SAE 4	02–160741	(A)4H
	SAE 6	02–160742	(A)6H
C–10–3	1/4" BSPP	876705	(A)2G
	3/8" BSPP	876714	(A)3G
	SAE 6	876704	(A)6H
	SAE 8	876711	(A)8H
C–10–3S	1/4" BSPP	876707	(A)2G
	3/8" BSPP***	876710	(A)3G
	SAE 6	876706	(A)6H
	SAE 8**	876712	(A)8H
C–12–3	1/2" BSPP	02–161817	(A)4G
	3/4" BSPP	02–161816	(A)6G
	SAE 10	02–160642	(A)10H
	SAE 12	02–160646	(A)12H
C–12–3S	1/2" BSPP*	02–178270	(A)4G
	3/4" BSPP*	02–178271	(A)6G
	SAE 10**	02–178268	(A)10H
	SAE 12**	02–178269	(A)12H

Housing	Ports 1, 2 & 3	Part number	Code
C–16–3	1/2" BSPP	876720	(A)4G
	3/4" BSPP	876722	(A)6G
	SAE 10	876721	(A)10H
	SAE 12	876723	(A)12H
C–16–3S	1/2" BSPP	02–160676	(A)4G
	3/4" BSPP	876726	(A)6G
	SAE 10	876725	(A)10H
	SAE 12	876727	(A)12H
C–20–3	1/2" BSPP	876737	(A)4G
	3/4" BSPP***	876738	(A)6G
	SAE 10	876757	(A)10H
	SAE 12	876739	(A)12H
C–20–3S	3/4" BSPP	876740	(A)6G
	1" BSPP	876742	(A)8G
	SAE 12	876741	(A)12H
	SAE 16	876743	(A)16H

* Port 3 = 3/8" BSPP
** Port 3 = SAE 6
*** Port 3 = 1/4" BSPP

Notes: BSPP porting is designated by "G" in the model code SAE porting is designated by either "H" or "T" in the model code.

Fatigue rated aluminum housings are intended for applications up to 210 bar (3000 psi) with harsh duty cycles. These housings have been fatigue rated to NFPA standards to one million cycles.

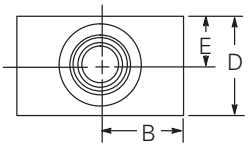

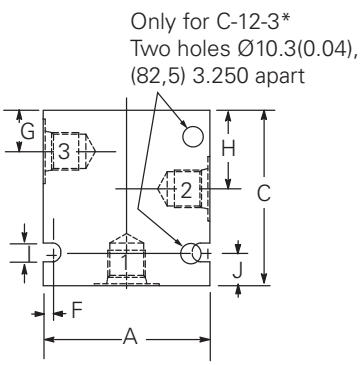

Dimensions	A	B	C	D	E	F	G	H	I	J	Mass
mm (inch)											kg (lb)
C-8-3	63,5 (2.50)	31,8 (1.25)	67,3 (2.65)	38,1 (1.50)	19,1 (0.75)	3,4 (0.13)	15,5 (0.61)	29,8 (1.17)	7,1 (0.28)	13,3 (0.52)	0,4 (0.83)
C-10-3	75,4 (2.97)	38,1 (1.50)	75,4 (2.97)	50,0 (1.97)	24,6 (0,97)	9,5 (0.37)	18,8 (0.74)	34,8 (1.37)	7,1 (0.28)	18,2 (0.72)	0,7 (1.65)
C-10-3S	76,2 (3.00)	38,1 (1.50)	76,2 (3.00)	50,8 (2.00)	25,4 (1.00)	9,5 (0.37)	15,1 (0.59)	31,7 (1.25)	7,1 (0.28)	19,0 (0.75)	0,7 (1.65)
C-12-3	88,9 (3.50)	44,5 (1.75)	107,9 (4.25)	50,8 (2.00)	25,4 (1.00)	76,2 (3.00)	28,7 (1.13)	51,6 (2.03)	10,3 (0.41)	12,7 (0.50)	0,8 (1.80)
C-12-3S	88,9 (3.50)	44,5 (1.75)	101,6 (4.00)	50,8 (2.00)	25,4 (1.00)	76,2 (3.00)	23,0 (0.91)	42,1 (1.66)	10,3 (0.41)	44,5 (1.75)	0,8 (1.80)
C-16-3	114,3 (4.50)	60,3 (2.37)	114,3 (4.50)	63,5 (2.50)	31,8 (1.25)	10,3 (0.41)	28,4 (1.12)	57,0 (2.24)	8,7 (0.34)	25,4 (1.00)	2,0 (4.50)
C-16-3S	114,3 (4.50)	54,0 (2.12)	114,3 (4.50)	63,5 (2.50)	31,7 (1.25)	10,3 (0.40)	20,5 (0.81)	38,1 (1.50)	8,7 (0.34)	25,4 (1.00)	2,0 (4.40)
C-20-3	127,0 (5.00)	63,5 (2.50)	139,7 (5.50)	82,5 (3.25)	41,2 (1.62)	10,3 (0.40)	31,7 (1.25)	72,2 (2.84)	8,7 (0.34)	25,4 (1.00)	3,5 (7.71)
C-20-3S	127,0 (5.00)	63,5 (2.50)	127,0 (5.00)	82,5 (3.25)	41,2 (1.62)	10,3 (0.40)	20,6 (0.81)	50,8 (2.00)	8,7 (0.34)	25,4 (1.00)	3,6 (8.00)

Where measurements are critical request certified drawings. We reserve the right to change specifications without notice.

Housing	Ports 1, 2 & 3	Part number	Code
C–8–3	1/4" BSPP	02–160743	(S)2G
	3/8" BSPP	02–160744	(S)3G
	SAE 4	02–160745	(S)4T
	SAE 6	02–160746	(S)6T
C–10–3	1/4" BSPP	02–175127	(S)2G
	3/8" BSPP	02–175128	(S)3G
	SAE 6	02–175124	(S)6T
	SAE 8	02–175125	(S)8T
C–12–3	1/2" BSPP	02–169815	(S)4G
	3/4" BSPP	02–169814	(S)6G
	SAE 10	02–161070	(S)10T
	SAE 12	02–169816	(S)12T
C–16–3	1/2" BSPP	02–175131	(S)4G
	3/4" BSPP	02–175132	(S)6G
	SAE 10	02–175129	(S)10T
	SAE 12	02–175130	(S)12T
C–20–3	3/4" BSPP	02–175135	(S)6G
	1" BSPP	02–175136	(S)8G
	SAE 12	02–175133	(S)12T
	SAE 16	02–175134	(S)16T

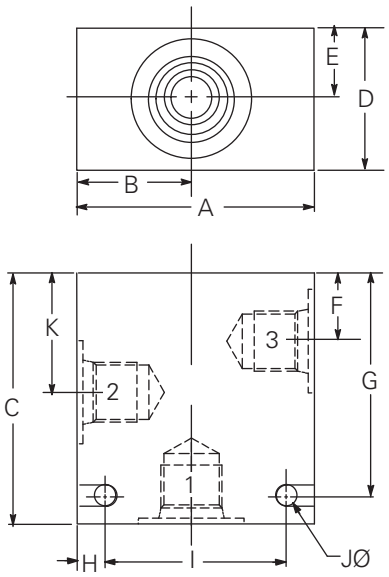

Notes: BSPP porting is designated by "G" in the model code SAE porting is designated by "T" in the model code.

Fatigue rated steel housings are intended for applications up to 350 bar (5000 psi) with harsh duty cycles. These housings have been fatigue rated to NFPA standards to one million cycles.

Dimensions	A	B	C	D	E	F	G	H	I	J	K	Mass
mm (inch)												kg (lb)
C-8-3*	63,5 (2.50)	31,8 (1.25)	66,7 (2.63)	38,1 (1.50)	19,1 (0.75)	15,5 (0.61)	54,0 (2.13)	3,3 (0.13)	56,9 (2.24)	7,1 (0.28)	29,8 (1.17)	0,9 (2.15)
C-10-3	76,2 (3.00)	38,1 (1.50)	76,2 (3.00)	44,4 (1.75)	22,4 (0.88)	19,1 (0.75)	63,5 (2.50)	9,7 (0.38)	57,0 (2.24)	7,1 (0.28)	35,1 (1.38)	1,7 (3.75)
C-12-3	88,9 (3.50)	44,4 (1.75)	101,6 (4.00)	50,8 (2.00)	25,4 (1.00)	28,7 (1.13)	88,9 (3.50)	12,7 (0.50)	63,5 (2.50)	10,3 (0.40)	51,5 (2.03)	3,0 (6.75)
C-16-3	101,6 (4.00)	50,8 (2.00)	107,9 (4.25)	50,8 (2.00)	25,4 (1.00)	25,4 (1.00)	88,9 (3.50)	12,7 (0.50)	76,2 (3.00)	10,3 (0.40)	54,0 (2.13)	3,4 (7.70)
C-20-3	114,3 (4.50)	57,1 (2.25)	139,7 (5.50)	63,5 (2.50)	31,8 (1.25)	31,8 (1.25)	114,3 (4.50)	19,0 (0.75)	76,2 (3.00)	11,9 (0.47)	72,2 (2.84)	6,4 (14.30)

* 8 Series housings utilize a slot instead of mounting holes.

J

C-**-3S

Steel housings (NFPA fatigue rated)

Housing	Ports 1 & 2	Port 3	Part number	Code
C–10–3S	3/8" BSPP	1/4" BSPP	02–163313	(S)3G
	1/2" BSPP	1/4" BSPP	02–163324	(S)4G
	SAE 6	SAE 6	02–171961	(S)6T
	SAE 8	SAE 6	02–163322	(S)8T
	SAE 10	SAE 6	02–163323	(S)10T
C–12–3S	1/2" BSPP	3/8" BSPP	02–160994	(S)4G
	3/4" BSPP	3/8" BSPP	02–160995	(S)6G
	SAE 10	SAE 6	02–160996	(S)10T
	SAE 12	SAE 6	02–160997	(S)12T
C–16–3S	1/2" BSPP	3/8" BSPP	02–175118	(S)4G
	3/4" BSPP	3/8" BSPP	02–175119	(S)6G
	SAE 10	SAE 6	02–175116	(S)10T
	SAE 12	SAE 6	02–175117	(S)12T
C–20–3S	3/4" BSPP	3/8" BSPP	02–175122	(S)6G
	1" BSPP	3/8" BSPP	02–175123	(S)8G
	SAE 12	SAE 6	02–175120	(S)12T
	SAE 16	SAE 6	02–175121	(S)16T

Notes: BSPP porting is designated by "G" in the model code SAE porting is designated by "T" in the model code.

Fatigue rated steel housings are intended for applications up to 350 bar (5000 psi) with harsh duty cycles. These housings have been fatigue rated to NFPA standards to one million cycles.

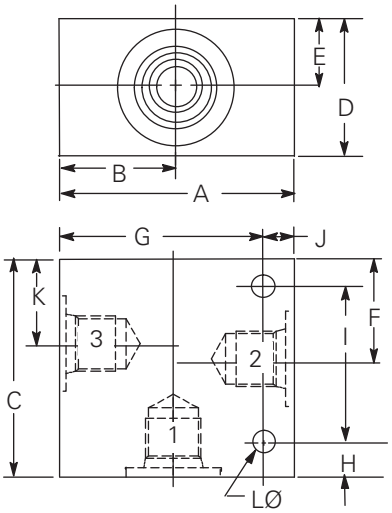

C-10 & -12

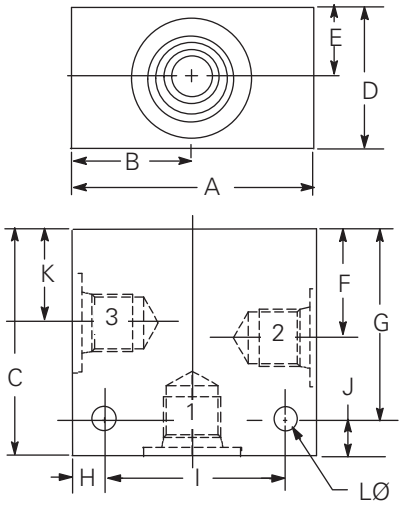

C-16 & -20

Dimensions	A	B	C	D	E	F	G	H	I	J	K	Lø	Mass
mm (inch)													kg (lb)
C-10-3S	63,5 (2.50)	31,8 (1.25)	76,2 (3.00)	41,3 (1.63)	20,7 (0.82)	36,6 (1.44)	53,8 (2.12)	11,2 (0.44)	53,8 (2.12)	9,7 (0.38)	19,8 (0.78)	8,7 (0.34)	1,08 (2.40)
C-12-3S	88,9 (3.50)	44,5 (1.75)	101,6 (4.00)	50,8 (2.00)	25,4 (1.00)	41,9 (1.65)	76,2 (3.00)	31,7 (1.25)	57,1 (2.25)	12,7 (0.50)	23,1 (0.91)	10,3 (0.40)	2,4 (5.40)
C-16-3S	88,9 (3.50)	41,2 (1.62)	88,9 (3.50)	50,8 (2.00)	25,4 (1.00)	38,1 (1.50)	69,8 (2.75)	12,7 (0.50)	63,5 (2.50)	19,0 (0.75)	17,4 (0.68)	10,3 (0.40)	2,6 (5.90)
C-20-3S	101,6 (4.00)	44,4 (1.75)	114,3 (4.50)	63,5 (2.50)	31,7 (1.25)	50,8 (2.00)	88,9 (3.50)	12,7 (0.50)	76,2 (3.00)	25,4 (1.00)	20,6 (0.81)	10,3 (0.40)	4,6 (10.24)

Where measurements are critical request certified drawings. We reserve the right to change specifications without notice.

For use with EPV16-A or B only.

Housing Number

Code	Port Size	Aluminum EPV16-A	EPV16-B	Steel EPV16-A	EPV16-B
4G	1/2" BSPP	02-185448	02-166607	02-180050	02-165500
6G	3/4" BSPP	02-185449	02-161582	02-180051	02-164931
10H	SAE 10	02-185446	02-170238	–	–
12H	SAE 12	02-185447	02-166609	–	–
10T	SAE 10	–	–	02-180048	02-161983
12T	SAE 12	–	–	02-180049	02-161982
5C	CETOP5 (NFPA D05) interface (Requires steel housing)				

Model	A	B	C	D	E	F	G	ØH	J	Mass kg (lb)	
mm (inch)										Alum	Steel
Modified C-16-3S	76,2	30,2	79,2	100,8	38,1	12,7	21,4	8,7	60,4	2,0	6,0
body	(3.00)	(1.19)	(3.12)	(3.97)	(1.50)	(0.50)	(0.84)	(0.34)	(2.38)	(4.50)	(13.5)

Modified housing for use with EPV16-A.

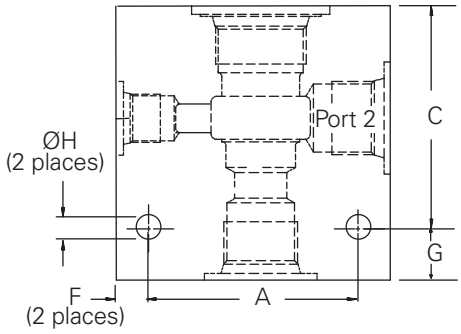

Modified housing for use with EPV16-B.

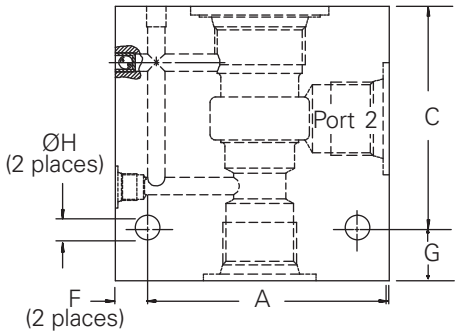

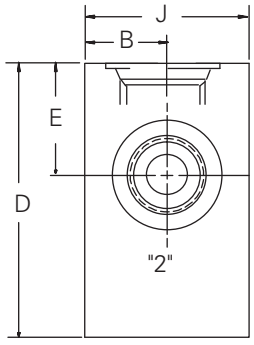

Where measurements are critical request certified drawings. We reserve the right to change specifications without notice.

C-**-4

Aluminum housings (light duty)

Housing	Ports 1, 2, 3 & 4	Part number	Code
C–10–4	3/8" BSPP SAE 6	02-179705 566161	(A)3B (A)6T
C–12–4	SAE10	6030517-001	(A)10T
C–16–4	3/4" BSPP SAE 12	02-175468 566411	(A)6B (A)12T
C–20–4	1" BSPP SAE 16	02-175469 566412	(A)8B (A)16T

Housing (FDC*-**only)			
C–10–4	3/8" BSPP SAE 6	02-175467 566234	(A)3B (A)6T
C–16–4	3/4" BSPP SAE 12	02-175468 566200	(A)6B (A)12T

Notes: BSPP porting is designated by "B" in the model code SAE porting is designated by "T" in the model code.

Light duty aluminum housings are intended for applications up to 210 bar (3000 psi) with light to moderate duty cycles.

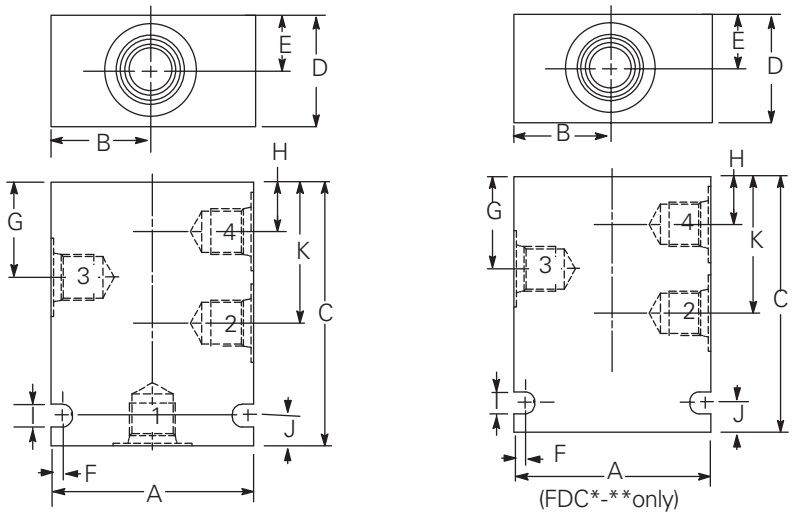

Dimensions	A	B	C	D	E	F	G	H	I	J	K	Mass
mm (inch)												kg (lb)
C-10-4	63,5 (2.50)	31,7 (1.25)	82,5 (3.25)	31,7 (1.25)	15,8 (0.62)	3,1 (0.12)	34,9 (1.37)	19,0 (0.75)	7,1 (0.28)	9,5 (0.37)	50,8 (2.00)	0,3 (0.72)
C-16-4	106,6 (4.00)	50,8 (2.00)	133,3 (5.25)	50,8 (2.00)	25,4 (1.00)	3,8 (0.15)	53,9 (2.12)	25,4 (1.00)	8,7 (0.34)	22,2 (0.87)	82,5 (3.25)	1,4 (3.24)
C-20-4	114,3 (4.50)	57,1 (2.25)	117,8 (7.00)	63,5 (2.50)	31,7 (1.25)	4,0 (0.16)	72,1 (2.84)	31,7 (1.25)	10,4 (0.41)	25,4 (1.00)	113,5 (4.47)	2,6 (5.76)

Note: For C-10-4 housings for VCB valves see page J-25.

Where measurements are critical request certified drawings. We reserve the right to change specifications without notice.

Housing	Ports 1, 2, 3 & 4	Part number	Code
C–8–4	1/4" BSPP	02–160747	(A)2G
	3/8" BSPP	02–160748	(A)3G
	SAE 4	02–160749	(A)4T
	SAE 6	02–160750	(A)6T
C–10–4	1/4" BSPP	876709	(A)2G
	3/8" BSPP	876715	(A)3G
	SAE 6	876708	(A)6H
	SAE 8	876713	(A)8H
C–12–4	3/4" BSPP	5986432-001	(A)6G
	SAE 10	5986434-001	(A)10T
	SAE 12	5986436-001	(A)12T
C–16–4	1/2" BSPP	876728	(A)4G
	3/4" BSPP	876730	(A)6G
	SAE 10	876279	(A)10H
	SAE 12	876731	(A)12H
C–20–4	3/4" BSPP	876744	(A)6G
	1" BSPP	876746	(A)8G
	SAE 12	876745	(A)12H
	SAE 16	876747	(A)16H

Housing (FDC*-only)**

C–10–4	1/4" BSPP	02–185804	(A)2G
	3/8" BSPP	02–185805	(A)3G
	SAE 6	02–185802	(A)6H
	SAE 8	02–185803	(A)8H

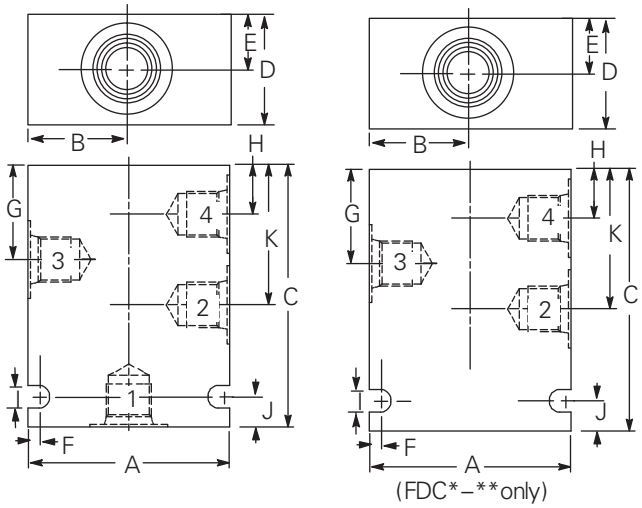

Notes: BSPP porting is designated by "G" in the model code SAE porting is designated by either "H" in the model code.

Fatigue rated aluminum housings are intended for applications up to 210 bar (3000 psi) with harsh duty cycles. These housings have been fatigue rated to NFPA standards to one million cycles.

For C-10-4 and C-12-4 housings for VCB valves see pages J-25 & J-27 respectively.

Dimensions	A	B	C	D	E	F	G	H	I	J	K	Mass
mm (inch)												kg (lb)
C-8-4	63,5 (2.50)	31,8 (1.25)	82,6 (3.25)	38,1 (1.50)	19,1 (0.75)	3,2 (0.13)	29,8 (1.17)	15,5 (0.61)	7,1 (0.28)	9,6 (0.38)	44,0 (1.73)	0,8 (1.76)
C-10-4	76,2 (3.00)	38,1 (1.50)	88,9 (3.50)	50,8 (2.00)	25,4 (1.00)	9,5 (0.37)	36,6 (1.44)	20,8 (0.82)	7,1 (0.28)	12,7 (0.50)	52,5 (2.07)	0,9 (2.00)
C-12-4	88,9 (3.50)	44,5 (1.75)	127,0 (5.00)	63,5 (2.50)	31,8 (1.25)	10,3 (0.40)	51,6 (2.03)	28,7 (1.13)	8,7 (0.34)	25,4 (1.00)	74,4 (2.93)	1,6 (3.6)
C-16-4	114,3 (4.50)	60,3 (2.37)	139,7 (5.50)	63,5 (2.50)	31,8 (1.25)	10,3 (0.40)	57,0 (2.24)	28,4 (1.12)	8,7 (0.34)	25,4 (1.00)	85,5 (3.37)	2,4 (5.29)
C-20-4	127,0 (5.00)	63,5 (2.50)	177,8 (7.00)	82,5 (3.25)	41,3 (1.63)	10,3 (0.40)	76,5 (3.01)	36,0 (1.42)	8,7 (0.34)	19,0 (0.75)	117,8 (4.63)	4,7 (10.5)

Where measurements are critical request certified drawings. We reserve the right to change specifications without notice.

C-**-4

Steel housings
(NFPA fatigue rated)

Housing	Ports 1, 2, 3 & 4	Part number	Code
C–8–4	1/4" BSPP	02–160751	(S)2G
	3/8" BSPP	02–160752	(S)3G
	SAE 4	02–160753	(S)4T
	SAE 6	02–160754	(S)6T
C–10–4	1/4" BSPP	02–175139	(S)2G
	3/8" BSPP	02–175140	(S)3G
	SAE 6	02–175137	(S)6T
	SAE 8	02–175138	(S)8T
C–16–4	1/2" BSPP	02–175143	(S)4G
	3/4" BSPP	02–175144	(S)6G
	SAE 10	02–175141	(S)10T
	SAE 12	02–175142	(S)12T
C–20–4	1/2" BSPP	02–175147	(S)4G
	3/4" BSPP	02–175148	(S)6G
	SAE 12	02–175145	(S)12T
	SAE 16	02–175146	(S)16T

Notes: BSPP porting is designated by "G" in the model code SAE porting is designated by "T" in the model code 8 series utilize slot in place of mounting hole.

Fatigue rated steel housings are intended for applications up to 350 bar (5000 psi) with harsh duty cycles. These housings have been fatigue rated to NFPA standards to one million cycles.

For C-10-4 and C-12-4 housings for VCB valves see pages J-24 & J-27 respectively.

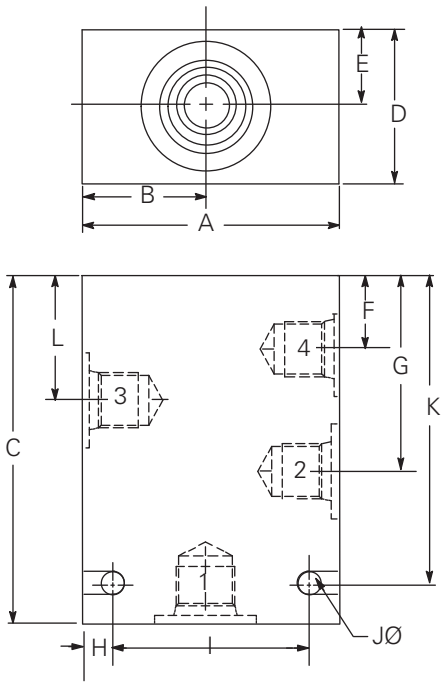

J

Dimensions	A	B	C	D	E	F	G	H	I	J	K	L	Mass
mm (inch)													kg (lb)
C-8-4*	63,5 (2.50)	31,8 (1.25)	82,6 (3.25)	38,1 (1.50)	19,1 (0.75)	15,5 (0.61)	44,0 (1.73)	3,3 (0.13)	57,1 (2.25)	7,1 (0.28)	73,0 (2.88)	29,8 (1.17)	1,2 (2.70)
C-10-4	76,2 (3.00)	38,1 (1.50)	88,9 (3.50)	44,4 (1.75)	22,2 (0.87)	19,1 (0.75)	50,8 (2.00)	9,5 (0.37)	57,1 (2.25)	7,1 (0.28)	76,2 (3.00)	34,9 (1.37)	1,9 (4.35)
C-16-4	101,6 (4.00)	50,8 (2.00)	139,7 (5.50)	50,8 (2.00)	25,4 (1.00)	25,4 (1.00)	82,5 (3.25)	12,7 (0.50)	76,2 (3.00)	10,3 (0.40)	120,6 (4.75)	53,9 (2.12)	5,6 (12.40)
C-20-4	114,3 (4.50)	57,1 (2.25)	177,8 (7.00)	63,5 (2.50)	31,8 (1.25)	31,8 (1.25)	113,5 (4.47)	19,1 (0.75)	76,2 (3.00)	11,8 (0.47)	152,4 (6.00)	72,1 (2.84)	8,2 (18.20)

* 8 Series housings utilize slot instead of mounting holes.

Where measurements are critical request certified drawings. We reserve the right to change specifications without notice.

Housing	Ports 2,3,4	Port 1,5	Aluminum part number	Code	Steel part number	Code
C–12–5S	SAE 10	SAE 4	4998820-001	(A)10T	4998821-001	(S)10T
	SAE 12	SAE 4	4998820-002	(A)12T	4998821-002	(S)12T
	1/2" BSPP	1/4" BSPP	4998820-003	(A)04G	4998821-003	(S)04G
	3/4" BSPP	1/4" BSPP	4998820-004	(A)06G	4998821-004	(S)06G
C–16–5S	SAE 12	SAE 4	4994880-001	(A)12T	4994881-001	(S)12T
	SAE 16	SAE 4	4994880-002	(A)16T	4994881-002	(S)16T
	3/4" BSPP	1/4" BSPP	4994880-003	(A)06G	4994881-003	(S)06G
	1" BSPP	1/4" BSPP	4994880-004	(A)08G	4994881-004	(S)08G
C–20–5S	SAE 12	SAE 4	4998822-001	(A)12T	4998823-001	(S)12T
	SAE 16	SAE 4	4998822-002	(A)16T	4998823-002	(S)16T
	3/4" BSPP	1/4" BSPP	4998822-003	(A)06G	4998823-003	(S)06G
	1" BSPP	1/4" BSPP	4998822-004	(A)08G	4998823-004	(S)08G

Notes: BSPP porting is designated by "G" in the model code SAE porting is designated by "T" in the model code.

Fatigue rated aluminum and steel housings are intended for applications up to 210 bar (3000 psi) and 350 bar (5000 psi) respectively with harsh duty cycles. These housings have been fatigue rated to NFPA standards to one million cycles.

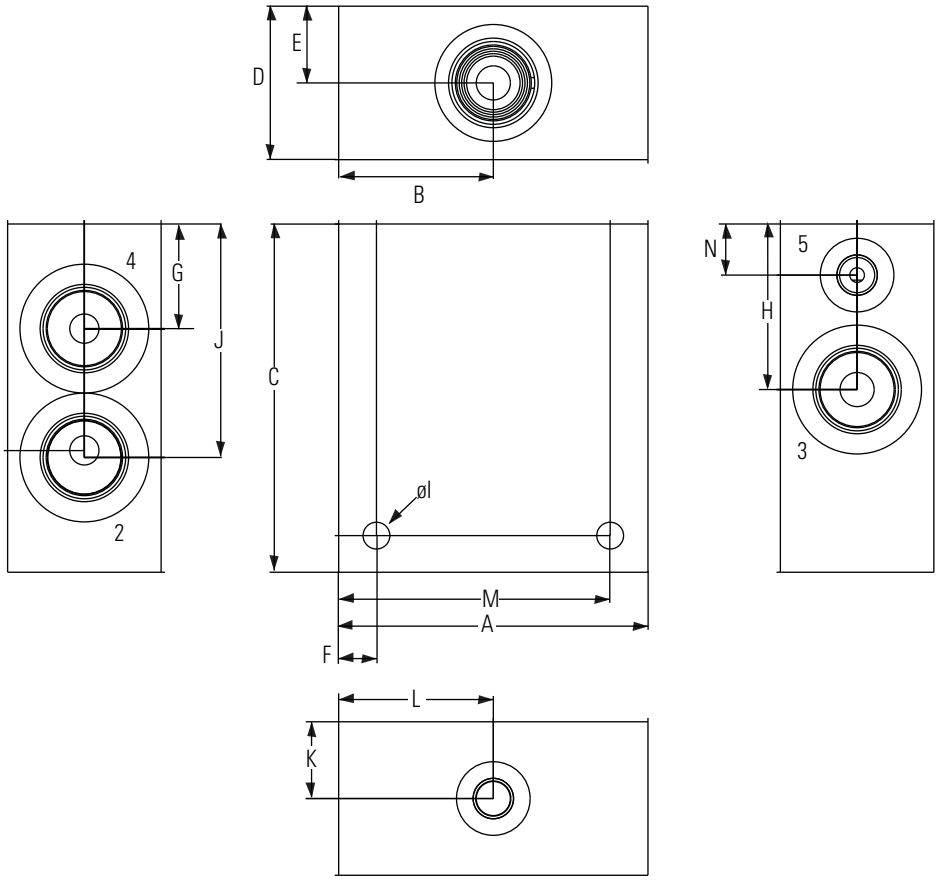

Dimensions	A	B	C	D	E	F	G	H	DIA. I	J	K	L	M	N
mm (inch)														
C-12-5S	100.8 (3.97)	50.4 (1.99)	113.5 (4.47)	50 (1.97)	25 (0.99)	12.3 (0.49)	34.1 (1.34)	54 (2.13)	8.7 (0.34)	76.1 (3.00)	25 (0.99)	50.4 (1.99)	88.5 (3.49)	16.7 (0.66)
C-16-5S	113.5 (4.47)	56.8 (2.24)	126.2 (4.97)	62.7 (2.47)	31.4 (1.24)	9.5 (0.38)	36.1 (1.42)	58.7 (2.31)	8.7 (0.34)	85.7 (3.38)	31.4 (1.24)	56.8 (2.24)	104.8 (4.13)	16.9 (0.66)
C-20-5S	126.2 (4.97)	63.1 (2.49)	138.9 (5.47)	75.4 (2.97)	37.7 (1.49)	12.7 (0.50)	37.6 (1.48)	62.3 (2.45)	10.3 (0.40)	87.4 (3.44)	37.7 (1.09)	63.1 (2.49)	114.3 (4.50)	16.8 (0.66)

Where measurements are critical request certified drawings. We reserve the right to change specifications without notice.

Port dimensions

Key dimensions in all standard housings

SAE Size	Thread size	Minimum spotface ø	Minimum full thd depth
4	0.437"-20 UNF-2B	21,1 (0.82)	11,5 (0.45)
6	0.563"-18 UNF-2B	24,7 (0.96)	12,7 (0.50)
8	0.750"-16 UNF-2B	30,2 (1.18)	14,2 (0.56)
10	0.875"-14 UNF-2B	34,2 (1.34)	16,6 (0.65)
12	1.062"-12 UN-2B	41,3 (1.62)	19,0 (0.75)
16	1.312"-12 UN-2B	48,6 (1.91)	19,0 (0.75)

BSPP thread size	Minimum spotface Ø	Minimum full thd depth
1/4"	24 (0.94)	12,2 (0.48)
3/8"	27 (1.06)	12,2 (0.48)
1/2"	33 (1.29)	15,0 (0.59)
3/4"	42 (1.65)	16,3 (0.64)
1"	47 (1.85)	19,1 (0.75)

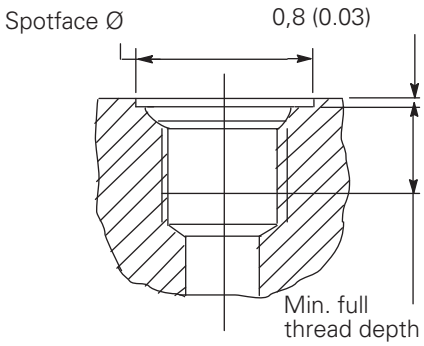

Where measurements are critical request certified drawings. We reserve the right to change specifications without notice.

Standard plugs

C-**-2 Cavity Plugs

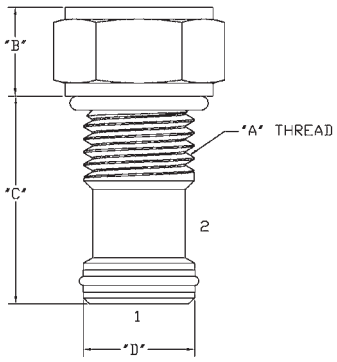

Size					Assy. no.	Seal kit
To fit cavity	A	B	C	øD		Buna-N Viton®
C-4-2	0.4375"-20	5,1 (0.20)	21.8 (0.86)	8,61/8,66 (0.339/0.341)	5986597-001	9900174-000 9900175-000
C-8-2	0.750"-16	9,1 (0.36)	27.4 (1.08)	12,6/12,5 (0.498/0.496)	02-171585	02-165877 02-165875
C-10-2	0.875"-14	7,9 (0.31)	31,7 (1.25)	15,8/15,7 (0.62/0.62)	565814	565806 889627
C-12-2	1.062"-12	18,7 (0.74)	44,5 (1.75)	23,7/23,7 (.936/.934)	02-171710	02-165889 02-165888
C-16-2	1.312"-12	12,7 (0.50)	44.7 (1.76)	28,5/28,5 (1.12/1.12)	565816	889631 889635
C-20-2	1.625"-12	13,5 (0.53)	57,2 (2.25)	36,4/36,4 (1.43/1.43)	566440	889639 889643

Note: To block flow from between the ports in any unused standard cavity, in a housing or manifold. Order cavity plugs by part number.

C-**-3(S) cavity plugs

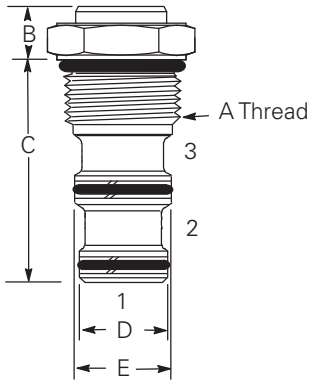

Size						Assy. no.	Seal kit
To fitcavity	A	B	C	D	E		Buna-N Viton®
C-4-3	0.4375"-20	5,1 (0.20)	37,3 (1.47)	7,82/7,87 (0.308/0.310)	8,61/8,66 (0.339/0.341)	5986599-001	9900176-000 9900177-000
C-8-3	0.750"-16	9,1 (0.36)	40,7 (1.60)	14,2/14,0 (0.56/0.55)	15,8 (0.623/0.621)	02-171708	02-160755 02-160765
C-10-3S	0.875"-14	7,9 (0.30)	74,2 (1.86)	17,4/17,4 (0.68/0.68)	19,0/18,9 (0.74/0.74)	566436	02-173019 02-173020 889624
C-10-3			46,0 (1.81)	15,8/15,7 (0.62/0.62)	17,4/17,3 (0.68/0.68)	565815	889628
C-12-3S	1.062"-12	18,7 (0.74)	57,7 (2.27)	22,1/22, 1 (0.874/0.872)	23,7/23,7 (0.936/0.934)	02-171711	02-180095 02-165887
C-12-3			67,1 (2.64)	–	–	02-171712	02-165872 02-165886
C-16-3S	1.312"-12	12,7 (0.50)	55,6 (2.18)	25,3/25,3 (0.99/0.99)	28,5/28,5 (1.2/1.2)	566438	889633 889637
C-16-3			73,1 (2,87)	26,9/26,9 (1.06/1.06)	28,5/28,5 (1.2/1.2)	566437	889632 889636
C-20-3S	1.625"-12	13,5 (0.53)	76.2 (3.0)	33,3/33,2 (1.31/1.30)	36,4/36,4 (1.43/1.43)	566442	02-113153 02-112969
C-20-3			98.5 (3.87)	33,3/33,2 (1.31/1.30)	36,4/36,4 (1.43/1.43)	566441	889640 889644

Note: C-16-2 cavity plug can be used to block port 3 of C-16-3

J

Where measurements are critical request certified drawings. We reserve the right to change specifications without notice.

Cavity plugs

C-**-4 cavity plugs

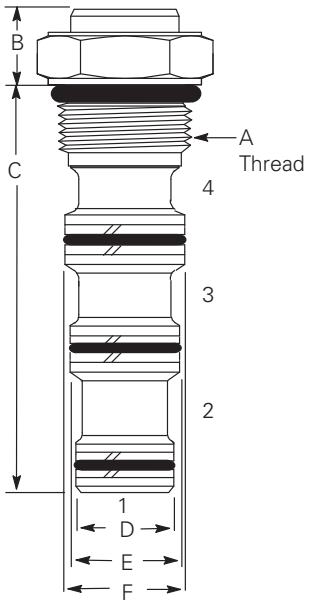

To Fit cavity size	A	B	C	D	øE	øF	øG	Assy no.
C-8-4	0.750"-16	22,2 (0.87) hex. Torque 35-40 Nm(25-30 lbf ft)	8,6 (0.34)	54,6 (2,15)	12,6 (0.49)	14,2 (0.55)	15,8 (0.62)	02-171709
C-10-4(U)	0.875"-14	25,4 (1.0) hex. Torque 47-54 Nm (35-40 lbf ft)	7,9 (0.31)	61,9 (2.43)	15,8/15,7 (0.62/0.62)	17,4/17,3 (0.68/0.68)	19,0/18,9 (0.74/0.74)	566244
C-16-4	1.312"-12	38,1 (1.50) hex. Torque 109-122 Nm (80-90 lbf ft)	12,7 (0.50)	101.6 (4.00)	25,3/25,3 (0.99/0.99)	26,9/26,9 (1.06/1.05)	28,5/28,5 (1.12/1.12)	566439
C-20-4	1.625"-12	47,6 (1.87) hex. Torque 129-156 Nm (95-115 lbf ft)	13,5 (0.53)	139,7 (5.50)	31,7/31,6 (1.24/1.24)	33,3/33,2 (1.31/1.30)	36,4/36,4 (1.43/1.43)	566443

⚠ Important

The cartridges listed are complete with seals compatible with antiwear hydraulic oil. If cartridges are to be compatible with antiwear and phosphate ester, order cartridges by part number plus the appropriate Viton seal kit as listed in Spare parts. Before using the cartridge, change the seals to Viton.

Special purpose cavity plugs

Functional symbols

Filter cartridge plugs

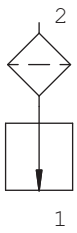

To fit cavity size	Assy. no.	Seal kit
C-10-2	02-186758	566806 (Buna-N) 889627 (Viton®)

Screen fitted on cartridge, intended direction of flow is from port 2 to 1 only. Maximum rated flow is 76 L/min (20 USgpm), maximum operating pressure is 350 bar (5000 psi)

Special 3 way cavity plugs

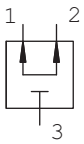

To fit cavity size	Assy. no.	Seal kit
C-8-3	02-186664	02-160755 (Buna-N) 02-160756 (Viton®)
C-10-3S	02-185257	02-173019 (Buna-N) 02-173020 (Viton®)

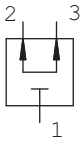

To fit cavity size	Assy. no.	Seal kit
C-10-3	02-161831	889624 (Buna-N) 889628 (Viton®)

Special 4 way cavity plugs

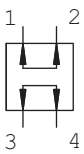

To fit cavity size	Assy. no.	Seal kit
C-8-4	02-179151	02-160757 (Buna-N) 02-160758 (Viton)

Where measurements are critical request certified drawings. We reserve the right to change specifications without notice.

ECF - Pressure filters

Flows to 19 L/min (5 USgpm) • Pressures to 207 bar (3000 psi)



Features and benefits

- Integrated disposable element which is screwed into the manifold port for last chance filtration
- Catches particles in a variety of sizes (20, 50, 70 microns)
- Universally adaptable to all sizes of standard manifolds

Design Specifications

Rated flow		19 L/min (5 USgpm)
Fluid compatibility		Compatible with all petroleum, oil based and synthetic fluids. Not rated for use with fluoro-rubber or ethylene propylene seals.
Temp range		-30°C to +121°C (-22°F to 250°F)
Collapse pressure rating		10 bar (145 psi)
Cavity		BC20-S3
Material	Head	Aluminum
	Bowl	Aluminum
Dry weight		0.11 kg (0.25 lbs)

Filter and element model code

ECF 1 SB 1 J 3 C * **

1 2 3 4 5 6 7 8 9

Sample model code

ECF1SB1J3CB25

1 Filter Series - ECF

2 Element collapse rating

1 – 250 PSI low collapse

3 Port options

SB – 1.312-12 UN SAE-16 straight thread 1" O.D. tube

4 Valve options

1 – Non-Bypass (Screw directly into cavity)

5 Indicator options

J – No indicator

6 Assembly length

3 – 80.2mm (3.157")

7 Element construction

C – Standard construction

8 Seal material

B – Buna-N
V – Viton-A

9 Fluid cleanliness

Code	Fluid cleanliness rating	Element construction
15	20/18/15	C-Pak
25		Wirescreen
149		Wirescreen

Where measurements are critical request certified drawings. We reserve the right to change specifications without notice.

ECF - pressure filters

Flows to 19 L/min (5 USgpm) • Pressures to 207 bar (3000 psi)

Cavity dimensions (BC20-S3)

inch

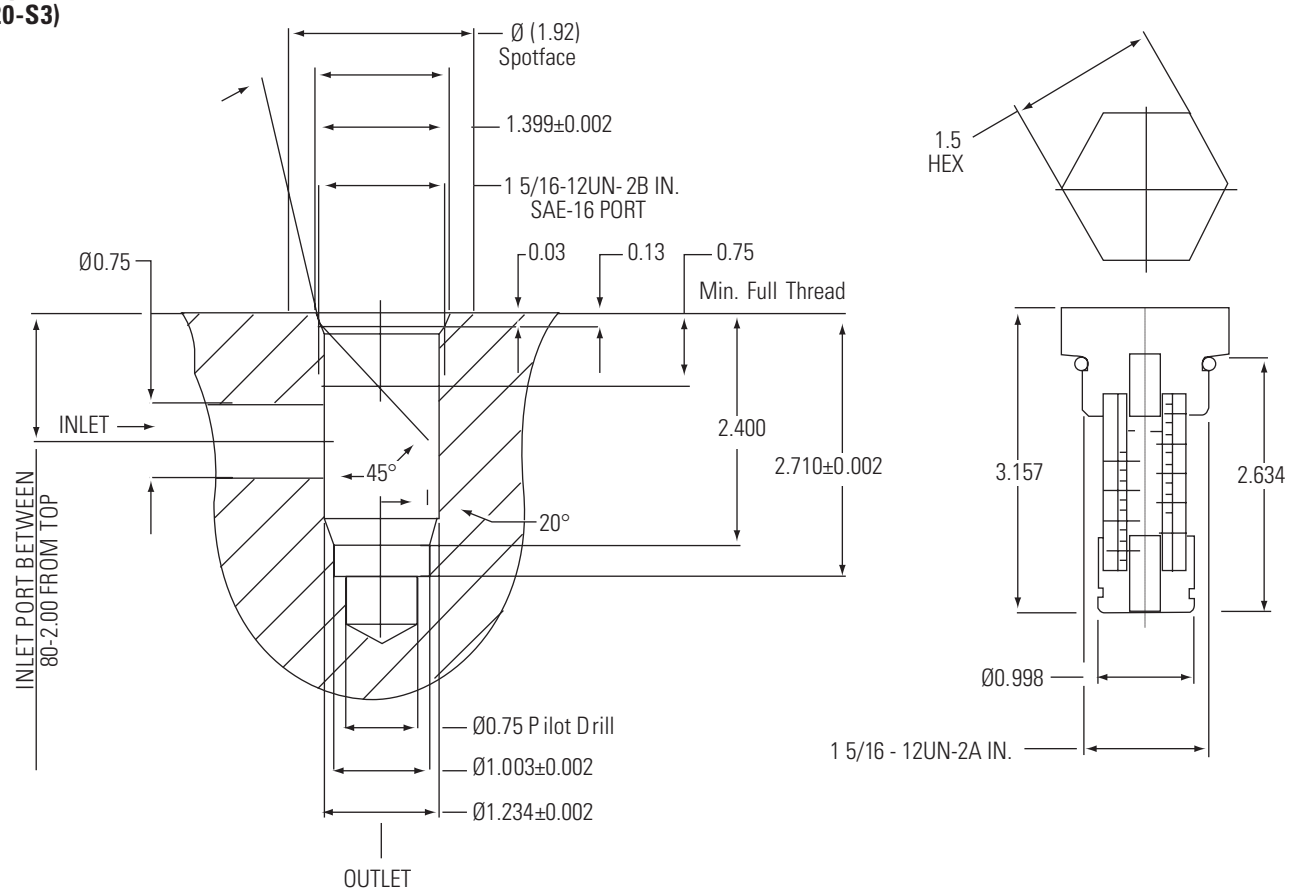

Housing/element flow data

Flow versus pressure drop:

150 SUS (32 cSt) oil with specific gravity of < 0.9

ECF-15

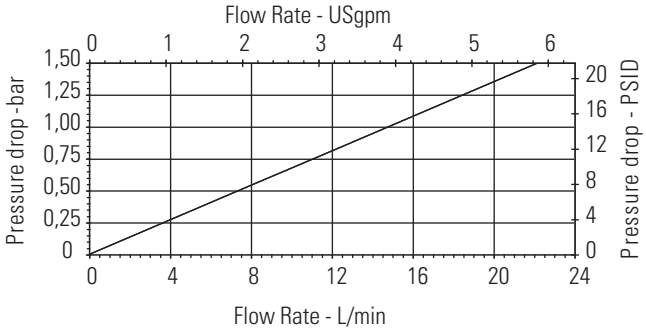

Where measurements are critical request certified drawings. We reserve the right to change specifications without notice.

Blank orifice discs (flat)

Note: For predrilled orifice discs, consult factory.

An orifice disc is installed at the bottom of a standard cavity to create a local pressure drop in the flow to and from port 1 of the cartridge.

Two series of discs are available according to the maximum pressure drop required:

1. Flat discs/maximum pressure drop/13,8 bar (200 psi).
2. Conical discs/maximum pressure drop/210 bar (3000 psi).

Cavity sizes	Max pressure drop bar (psi)	øA	B	øC	Assy number
C-8-2/4	13,8 (200)	12,45 (0.490)	1,27 (0.050)	*	02–163254
C-10-2/3/4	13,8 (200)	5,80 (0.622) 15,75 (0.620)	1,52 (0.060)	*	02–162850
C-16-2	13,8 (200)	28,58 (1.125) 28,52 (1.123)	2,03 (0.08)	*	566247
C-16-3	13,8 (200)	26,97 (1.062) 26,92 (1.060)	2,03 (0.08)	*	02-162872
C-16-3S/4	13,8 (200)	25,4 (1.00) 25,35 (0.998)	2,03 (0.08)	*	02-174504

*User to specify

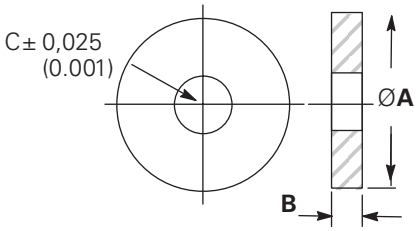

Blank orifice discs (conical)

Cavity sizes	Max pressure drop bar (psi)	øA	øB	øC	d	E	F	Assy number
C-8-2/4	210 (3000)	3,96 (0.156)	5,84 (0.230)	12,45 (0.490)	1,90 (0.075)	3,05 (0.120)	–	02–174854
C-8-3	210 (3000)	3,96 (0.156)	5,84 (0.230)	14,05 (0.553)	1,90 (0.075)	3,05 (0.120)	–	02–178181
C-10-2	210 (3000)	5,54 (0.218)	6,35 (0.250)	15,80 (0.622) 15,75 (0.620)	1,14 (0.045)	3,56 (0.140)	–	566478
C-12-2	210 (3000)	7,14 (0.281)	–	23,70 (0.933) 23,65 (0.931)	2,41 (0.095)	3,56 (0.140)	1,14 (0.045)	02-182842

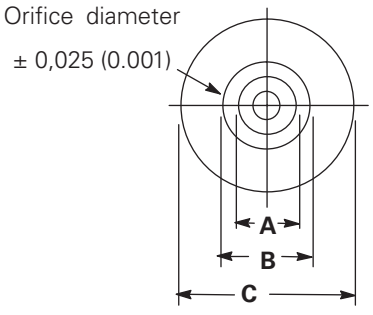

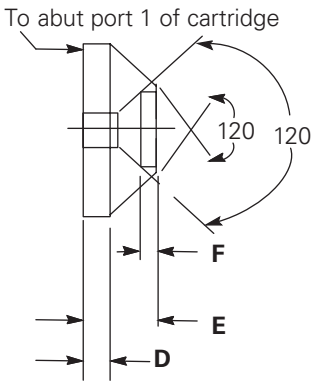

Where measurements are critical request certified drawings. We reserve the right to change specifications without notice.

Orifice disc - sizing guide (mm)

Select required orifice diameter using the graph below

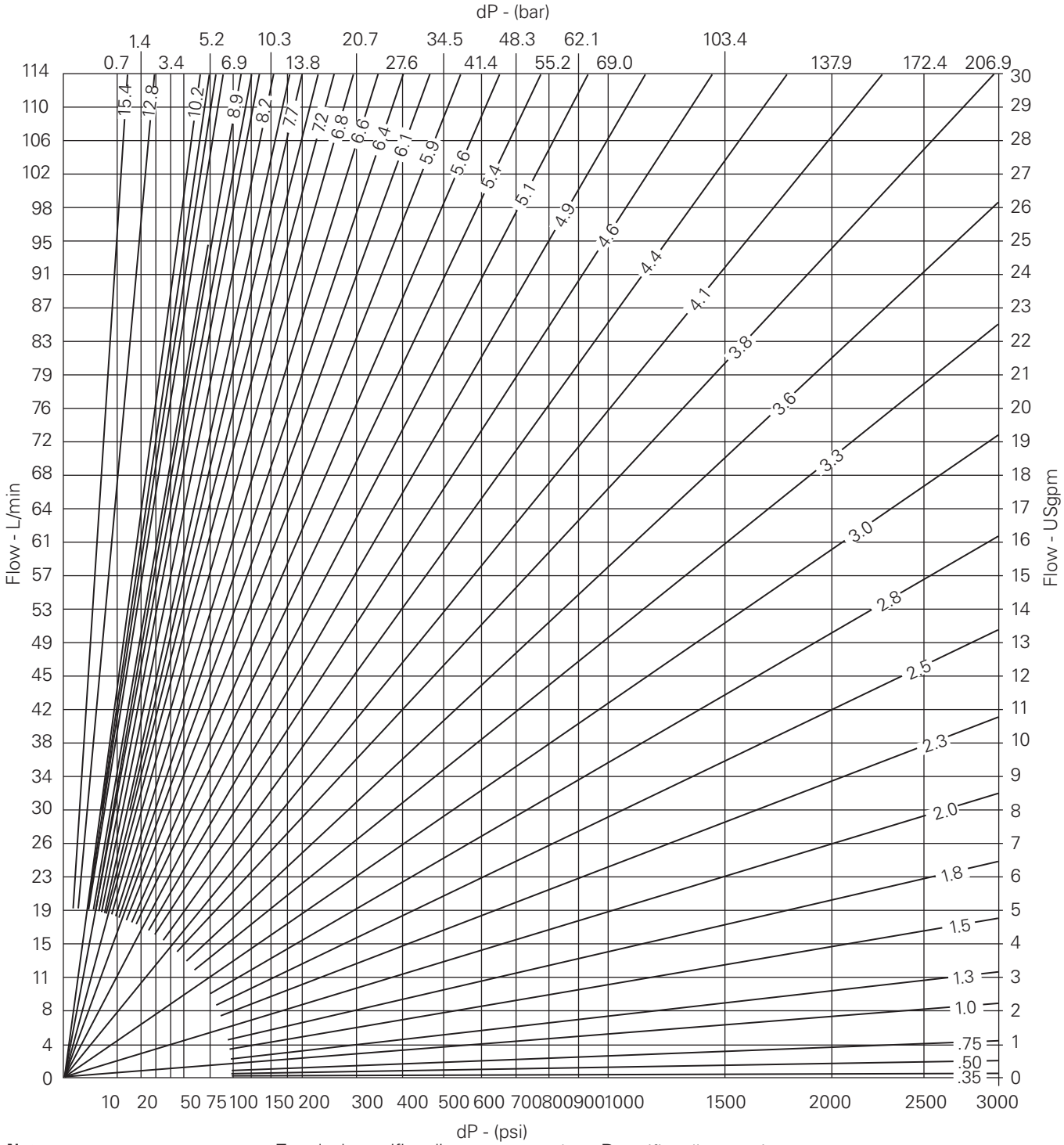

Notes:

This chart is calculated at 21.8 cSt and 49°C for ISO VG32 fluid (DTE-24), values will change with viscosity changes.

To calculate orifice diameter at other flows and differential pressures use the following formula:

$$D=1.350 \times \sqrt{(Q/(\sqrt{\Delta P})}$$

where **D**= orifice diameter in inches; **Q**= flow in US gallons per minute; **ΔP**= differential pressure across orifice in bar.

Where measurements are critical request certified drawings. We reserve the right to change specifications without notice.

Select required orifice diameter using the graph below

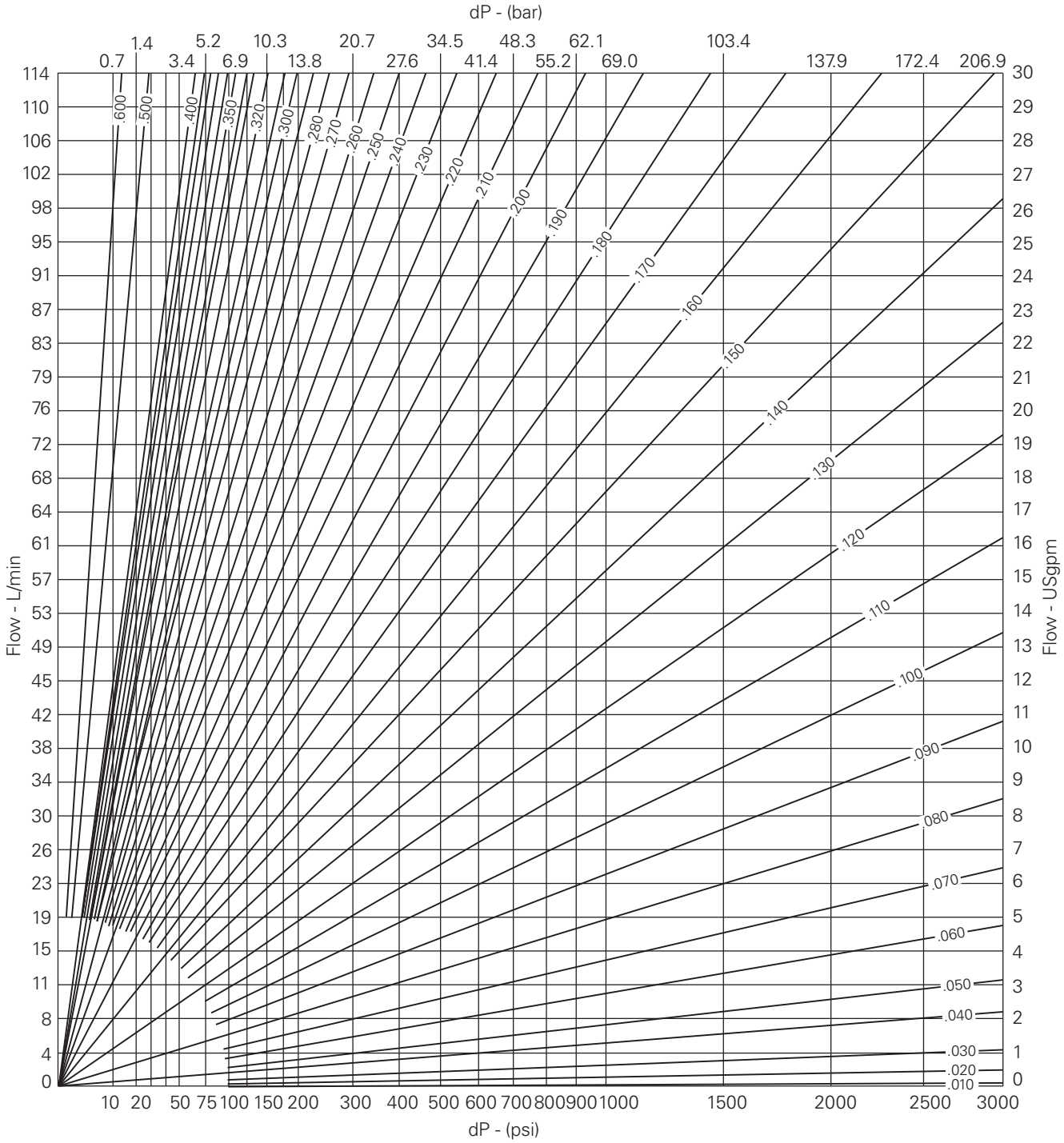

Notes:

This chart is calculated at 105 SUS and 120°F for ISO VG32 fluid (DTE-24), values will change with viscosity changes.

To calculate orifice diameter at other flows and differential pressures use the following formula:

$$D=0.203 \times \sqrt{(Q/(\sqrt{\Delta P})}$$

where **D**= orifice diameter in inches; **Q**= flow in US gallons per minute; **ΔP**= differential pressure across orifice in PSI.

Where measurements are critical request certified drawings. We reserve the right to change specifications without notice.

Pilot pistons

Pilot piston assemblies dimensions

Nominal cartridge size	Single or double acting	With or without stops	A	B	C	Required housing bore
8	Single	Without	15,1 (0.60)	34,1(1.34)	8,3 (0.33)	12,73 (0.500)
	Double	Without	15,1 (0.60)	53,2 (2.10)	8,3 (0.33)	12,75 (0.502)
10	Single	Without	19,1 (0.75)	41,3 (1.63)	13,5 (0.53)	15,88 (0.625)
	Double	Without	19,1 (0.75)	57,2 (2.25)	10,3 (0.41)	15,88 (0.625)
	Single	With	19,1 (0.75)	45,7 (1.80)	6,7 (0 26)	15,90 (0.626)
	Double	With	19,1 (0.75)	54,8 (2.16)	6,7 (0 26)	15,90 (0.626)
12	Single	Without	17,5 (0.69)	44,5 (1.75)	14,3 (0.56)	23,80 (0.937)
	Double	Without	17,5 (0.69)	71,4 (2.81)	14,3 (0.56)	23,85 (0.939)
16	Single	Without	31,8 (1.25)	63,5 (2.50)	12,7 (0.50)	28,58 (1.125)
	Double	Without	31,8 (1.25)	95.3 (3.75)	12,7 (0.50)	28,60 (1.126)
20	Single	Without	38,1 (1.50)	77,8 (3.06)	19,0 (0.75)	36,50 (1.437)
	Double	Without	38,1 (1.50)	117,5 (4.63)	19,0 (0.75)	36,53 (1.438)

Note: Use with cartridges to form pilot operated check and similar functions in HIC and standard valve packages.

⚠ Warning

The use of pilot pistons with check valve assemblies may increase the load applied to the valve poppet which may result is reduced fatigue life of the cartridge

Part numbers

Nominal cartridge size	Single or double acting	With or without stops	Piston with buna-N seals	Piston with viton® seal	Piston without seals
8	Single	Without	02-178662	02-178663	02-178653
	Double	Without	02-178669	02-178670	02-178654
10	Single	Without	02-166275	566418	566417
	Double	Without	566419	566420	02-166313
	Single	With	566421	566422	566337
	Double	With	566423	566424	566338
12	Single	Without	02-185700	02-185701	02-185699
	Double	Without	02-185703	02-185704	02-185702
16	Single	Without	566425	566426	889052
	Double	Without	566428	566429	566427
20	Single	Without	566431	566432	566430
	Double	Without	566434	566435	566433

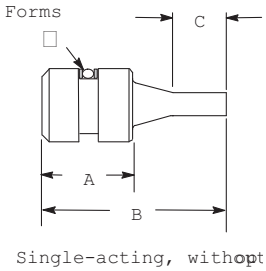

Single-acting, without

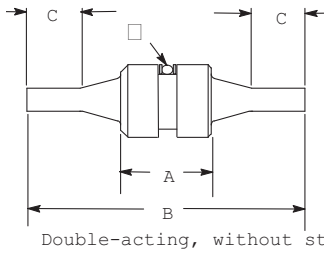

Double-acting, without st

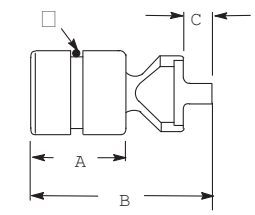

Single-acting, with st

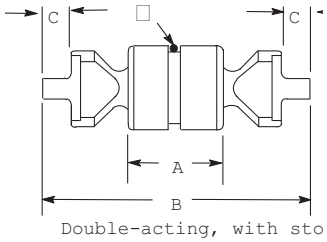

Double-acting, with sto

Note:

ψ Sealed models have a central O-ring with a back-up ring on both sides.

⚠ WARNING

Seals should not be used with check valves that have < 50 psi crack pressure

Where measurements are critical request certified drawings. We reserve the right to change specifications without notice.

Sensing check

Sensing check kits can be built into customized manifolds to permit pilot control from two or more alternate sources, as example here:

Kit part numbers

Sense Check kit	Part. no.
with Buna-N seals	566395
with Viton® seals	02-183199

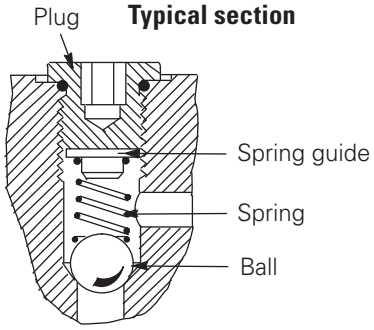

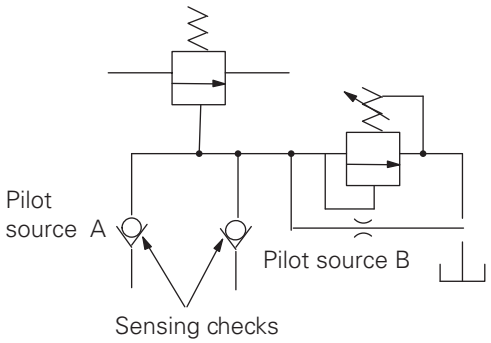

Sensing check cavity

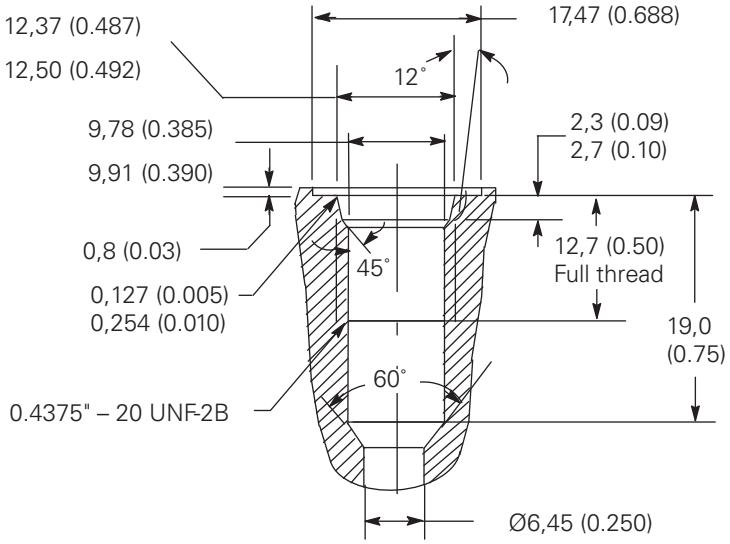

Panel mount adapter for 10 & 12 series valves

Used for mounting an adjustable pressure valve through a bulkhead or panel surface.

Part number 02-161837

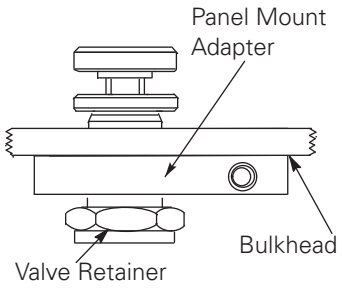

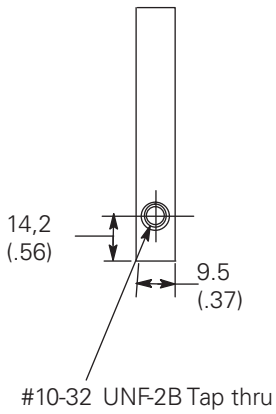

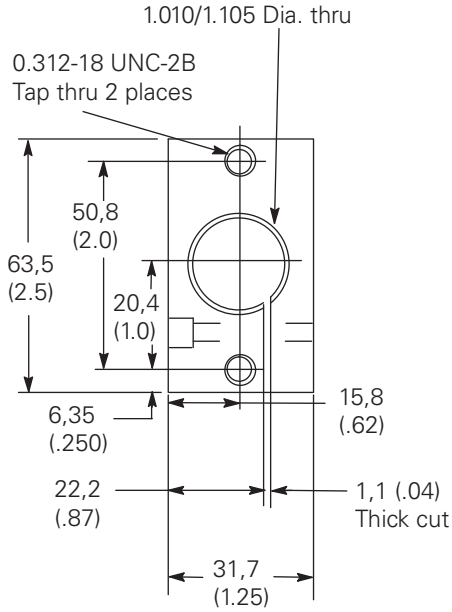

J

Where measurements are critical request certified drawings. We reserve the right to change specifications without notice.

Miscellaneous parts

Solenoid valve parts

Note:

When a solenoid valve is ordered as a cartridge only, the nut is included.

Description	Part number
Nut for standard core tube valves	
8 Series	02–170821
10, 12, 16, 20 Series and SV9-8	565558
10, 12, 16, 20 Series 350 bar valves	02-175698
Coil Spacers	
Spacer for SV9-8	02-186730
Spacer for SV9-10	02-179226
Nut for extended core tube valves	
	565559



Nut for standard core tube valves.



Nut for extended core tube valves.

Spare parts

SPC1/DPC1/11

Model code	Check valve (Qty)	Pilot piston (QTY)	Buna-N seal kit	Viton® seal kit
SPC1–10–P	CV1–10(V)–P–0–15 (1)	566417 (1)	565803	566086
SPC1–16–P	CV1–16(V)–P–0–20 (1)	889052 (1)	565810	889609
SPC1–20–P	CV2–20(V)–P–0–15 (1)	566430 (1)	889615	889619
DPC1–10–P	CV1–10(V)–P–0–15 (2)	02–166313 (1)	565803	566086
DPC11–12–P	CV11–12(V)–P–0–15 (2)	02–185702 (1)	02-165889	02-165888
DPC1–16–P	CV1–16(V)–P–0–20 (2)	566427 (1)	565810	889609
DPC1–20–P	CV2–20(V)–P–0–15 (2)	566433 (1)	889615	889619

MCV

Model code	Check valve	(Qty)	Relief valve	(Qty)	Piston	(Qty)
MCV1-16	CV1-16-P-0-5	(1)	RV3-16-S-0-35/	(1)	889052	(1)
MCV4-16	CV1-16-P-0-5	(4)	RV3-16-S-0-35/	(2)	889052	(2)
MCV1-20	CV2-20-P-0-5	(1)	RV3-16-S-0-35/	(1)	889052	(1)
MCV2-20	CV2-20-P-0-5	(2)	RV3-16-S-0-35/	(2)	889052	(2)

Adjustment kits

PFR2-16 Series Knob Kit

Description	Part number
K (Knob kit)	565586
Knob	02-162137
Jam nut	02-170637
Set screw	000805

FCV7,FCV6,FR2, Series Knob Kit

Description	Part number
K (Knob kit)	565585
Knob	02-165873*
Jam nut	02-170635*
Set screw	001016*

* Supplied as part of kit 565585

NV1 8-series

Description	Part number
C (Cap kit):	02-170163
Cap	02-170163
Nut	02-170161
K (Knob kit)	02-171892
Knob	02-174439
Jam nut	02-174515
Set screw	001016
S Kit:	
Nut	02-170159

Mcv series knob kit

Description	Part number
K (Knob kit):	565586
Knob	02-162137*
Jam nut	02-170637*
Set screw	000805*
S (nut)	565558

* Supplied as part of kit 565586

FCV11-12-S series knob kit

Description	Part number
K (Knob kit):	565585
Knob	02-184877
Jam nut	02-184878
Set screw	001016*

* Supplied as part of kit 565585

Where measurements are critical request certified drawings. We reserve the right to change specifications without notice.

Adjustment Kits

(cont.)

NV1 10- Series	Part number
Knob	888963
Acorn nut	02-162993
Nameplate	02-165920

NV1 16-&20-Series	Part number
Knob	02-162130
Acorn nut	02-162992
Nameplate(attached)	02-165922

FAR1-10/12 & 16 series	Part number
Knob kit	02-185169

Note: The only difference between the "D/B" and the "L/E" adjustment option is the orientation of the detent plate.

The B/E options are not available in kit form. The only difference between these and the D/L versions is that the lever is replaced with 02-165925 and an additional 310204 set screw is required.

MRV2-10-D/L, B/E 10-series	Part number
Lever kit:	565610
Hub	02-169085
Lever	888980
Spring	888986
Plunger	02-163705
Insert	02-169956
Spring	888874
Detent pla.	02-170023
Plate supp.	02-165090
Nameplate	888964
Acorn nut	02-162993

MRV2-10-K 10-series	Part number
Knob	888963
Acorn nut	02-162993
Nameplate	888964

MRV2-16-D/L, 16-series	Part number
Lever kit:	565611
Hub	02-169453
Lever	888988
Spring	888986
Plunger	02-163705
Insert	02-170103
Spring	888993
Detent plate	02-170102
Plate supp.	02-161901
Nameplate	02-165922
Acorn nut	02-162992

MRV2-16-K 16- series	Part number
Knob	02-162130
Acorn nut	02-162992
Nameplate	888967

Pressure control, 8-series	Part number
Retaining ring	02-166712
K (Knob kit)	02-170164
Cap	02-162806
Nut	02-170159

Retaining ring is required for C and S controls. When converting from the "S" or "C" option to the "K" option, remove retaining ring and nut before installing the knob kit.

Pressure control, 10 & 12-Series	Part number
C (Cap)	02-170616*
S (Nut)	565558*
K (Knob kit)	565585
Knob	02-165873
Jam nut	02-170635
Set screw	001016

*These parts also used to service PUV3–10 models.

Pressure control, 16-series	Part number
S (Nut)	565558
RV3 K (Knob kit)	565586
Knob	02-162137
Jam nut	02-170637
Set screw	000805
RV5 K (Knob Kit)	565585
Knob	02-165873
Jam nut	02-160635
Set screw	001016
RV5 C (Cap)	02–170616

J

Aeroquip
PERFORMANCE PRODUCTS
An Eaton Brand

Performance You Deserve
From A Name You Trust



When it isn't just a question of being first ...
But also being the best.

As the only leading supplier to manufacture our hose in our own ISO/QS certified hose plants, you are assured the highest quality and most advanced hose products.

Combining our rich heritage and on-track performance with the industry's largest pool of engineering resources, Aeroquip Performance Products continues to prove **There is a Difference ...!**

To locate an authorized distributor near you, or for more information, visit www.eaton.com/aeroquipperformance.

EATON
Powering Business Worldwide

1HP7 - Hand pump

50 bar (725 psi)

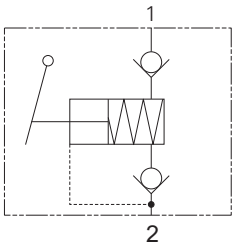

Description

This hand pump has been designed to be used on machines which require emergency release of brakes or for pilot supply for emergency lowering of access platforms. It can also be utilized in the lubrication circuits.

Operation

Depressing the plunger will force oil out through a check valve and into the system. The plunger will then retract drawing oil into the chamber through a second check valve.

Features

Built in pressure and suction checks. Self contained cartridge element. Low leakage ball and seat design. Minimal effort required for plunger movement.

Sectional view

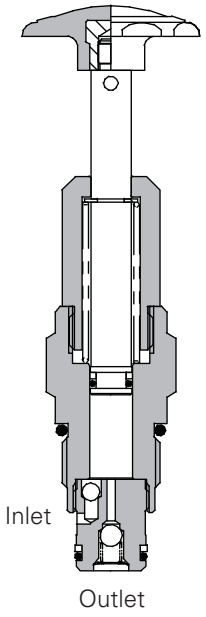

Performance data

Ratings and specifications	
Figures based on oil temperature of 40° C and viscosity of 32 cSt (150 SUS)	
Bore Diameter	9.5 mm (0.375")
Stroke	19 mm (0.75")
Displacement	1.3 cc (1.3 ml)/stroke
Generated pressure	50 bar (725 psi)
Cartridge material	Working parts hardened & ground steel
Body material	Zinc plated steel & anodised aluminium
Cavity Number	A12370 (See Section M)
Torque cartridge into cavity	40 Nm (30 ibs ft)
Weight	0.16 kg (0.35 lbs.)
Seal kit number	SK1224 (Nitrile) SK1224V (Viton)
Recommended filtration level	BS5540/4 Class 18/13 (25 micron nominal)
Operating Temperature	-30°C to +90°C (-22° to 194°F)
Leakage	0.3 milliliters/min nominal (5 dpm)
Nominal viscosity range	5 to 500 cSt

J

Where measurements are critical request certified drawings. We reserve the right to change specifications without notice.

1HP7 - Hand pump

50 bar (725 psi)

Model code

1HP7 – 3W – S

1 2 3

1 Basic code

1HP7- Cartridge only
1HP75 - Cartridge and body

2 Port Size

Code	Port size	Aluminum
Omit	Cartridge only	
3W	3/8" BSP	B19053
8T	1/2" SAE	B19402

3 Seals

S – Nitrile (for use with most industrial hydraulic oils)

SV – Viton® (for high temperature & most special fluid applications)

Dimensions
mm (inch)

Torque cartridge in aluminum housing 108-122 Nm (80-90 ft lbs)

Cartridge only

Basic Code: 1HP7

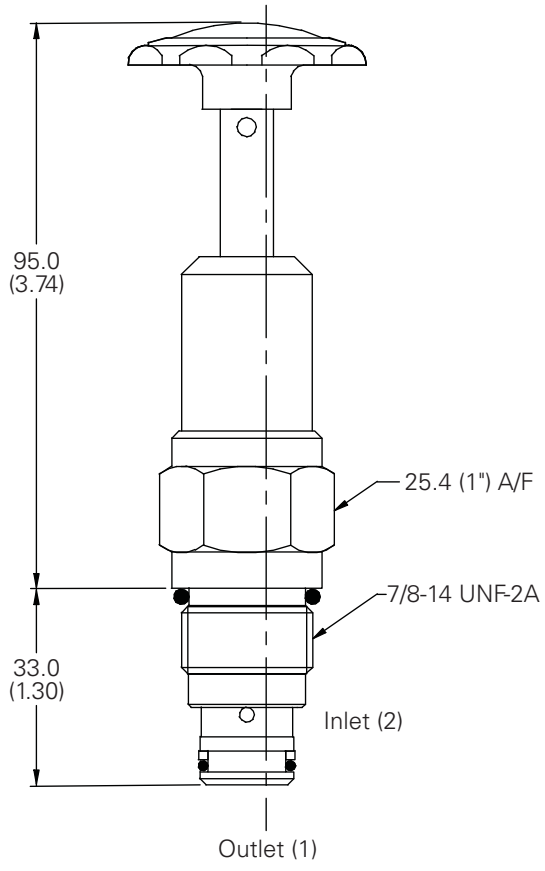

Installation drawing

Basic Code: 1HP75

3/8" Ports

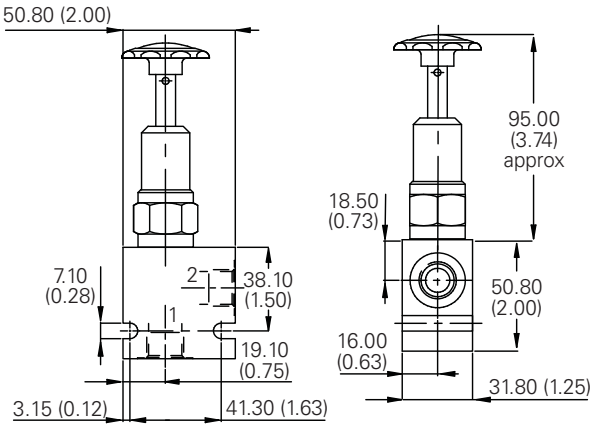

Where measurements are critical request certified drawings. We reserve the right to change specifications without notice.

1HP10 - Hand pump

250 bar (3625 psi)

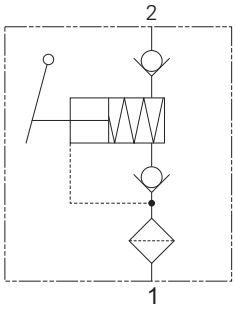

Operation

Depressing the plunger will force oil out through a check valve and into the system. The plunger will then retract drawing oil into the chamber through a second check valve.

Features

Built in pressure and suction checks and inlet strainer . Self contained cartridge element. Low leakage ball and seat design. Minimal effort required for plunger movement. Handle rotates on body to suit user.

Description

This hand pump has been designed to be used on machines which require emergency release of brakes or for pilot supply for emergency lowering of access platforms. It can also be utilized in the lubrication circuits.

Performance data

Ratings and specifications

Performance data is typical with fluid at 32 cST (150 SUS)	
Displacement	1.9cc/stroke
Generated pressure	250 bar (3625 psi)
Cartridge material	Steel with hard chrome piston
Cavity number	A878 (see Section M)
Torque cartridge into cavity	45-50 Nm
Weight	0.8 Kg (1.76 lbs)
Recommended Filtration Level	BS5540/4 Class 18/13 (25 micron nominal)
Operating temperature	–30° to +90° C (–22° to 194° F)
Nominal viscosity range	5 to 500 cSt

J

1HP10 - Hand pump

250 bar (3625 psi)

Model code

1HP10 – 3W – S

1 2 3

1 Basic code

1HP10 - Cartridge only

1HP15 - Cartridge and body

2 Port Size

Code	Port Size	Aluminum
Omit	Cartridge only	BXP16234
3W	3/8" BSP	BXP16235
4W	½" BSP	BXP16235

3 Seals

S - Nitrile (for use with most industrial hydraulic oils)

SV - Viton® (for high temperature & most special fluid applications)

Dimensions

mm (inch)

Cartridge only

Basic Code: 1HP10

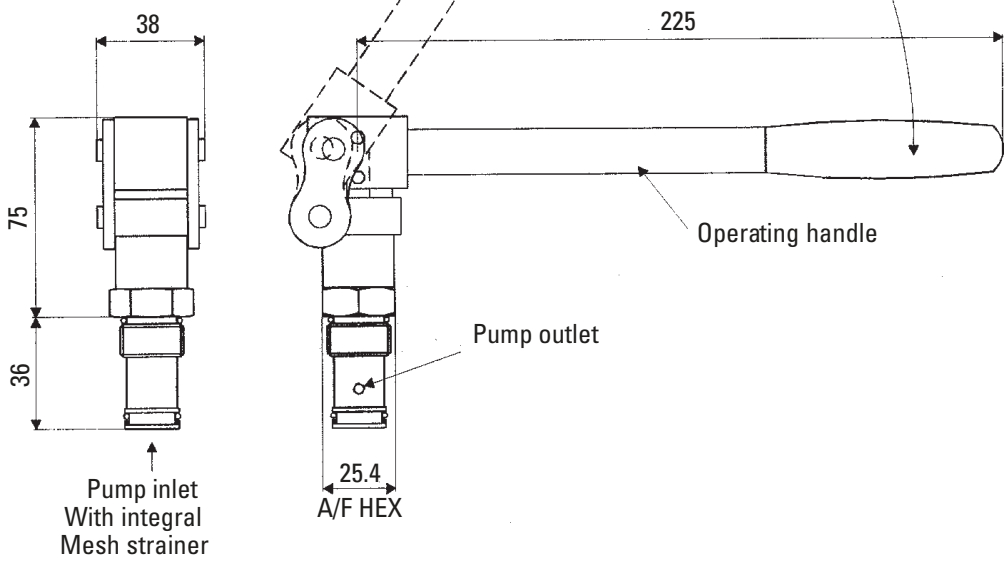

Installation Drawing

Basic Code: 1HP15
3/8" Ports

Where measurements are critical request certified drawings. We reserve the right to change specifications without notice.

Description

This valve is used to convert low input pressure from a small low pressure pump or sub-circuit to high pressure up to 700 bar (10000 psi) and can eliminate the need for high pressure pump, or high-low type circuit. It is best suited for use with low horsepower, variable volume pumps. Contact main office for full specifications.

Operation

The pressure intensifier allows free flow of oil through the inlet to the actuator until high pressure is required, then reciprocates to intensify the pressure with a ratio of 6.5-1 between the inlet pressure and the intensified pressure up to a maximum 700 bar. The unit automatically makes up for any leakage to prevent loss of pressure during clamping or cutting operations. The flow to the 'P' port should be regulated to prevent a too rapid cycle rate.

Features

Eliminates the need for single stroke air/oil systems. Continuous automatic make up for leakage. Light weight and compact. Reliable high quality.

Max pressure:

Inlet	110 bar (1600 psi)
Output	700 bar (10,000 psi)

Rated flow:

Inlet	1.5 L/min (0.4 USgpm)
Output	165 mL/min (10 in^3/min)

Functional symbol

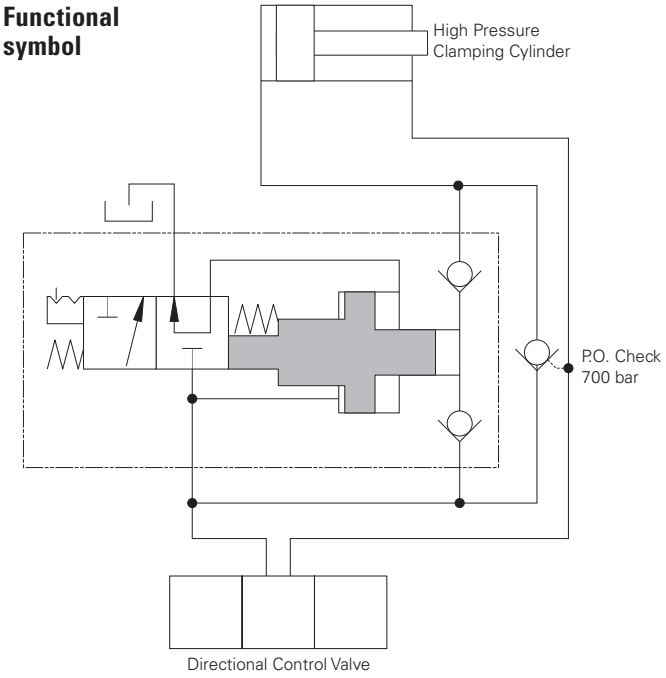

Dimensions

mm (inch)

Installation drawing

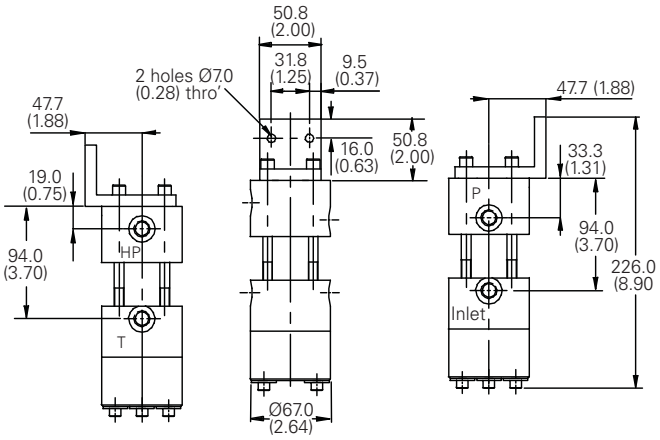

Model code

1T16	2W	6	S
1	2	3	4

1 Basic code

1T16 - Intensifier

2 Port sizes

2W - 1/4" BSP

3 Pressure intensification ratio

6 - 6:5:1

4 Seals

S - Nitrile (for use with most industrial hydraulic oils)

SV - Viton (for high temperature & most special fluid applications)

Where measurements are critical request certified drawings. We reserve the right to change specifications without notice.

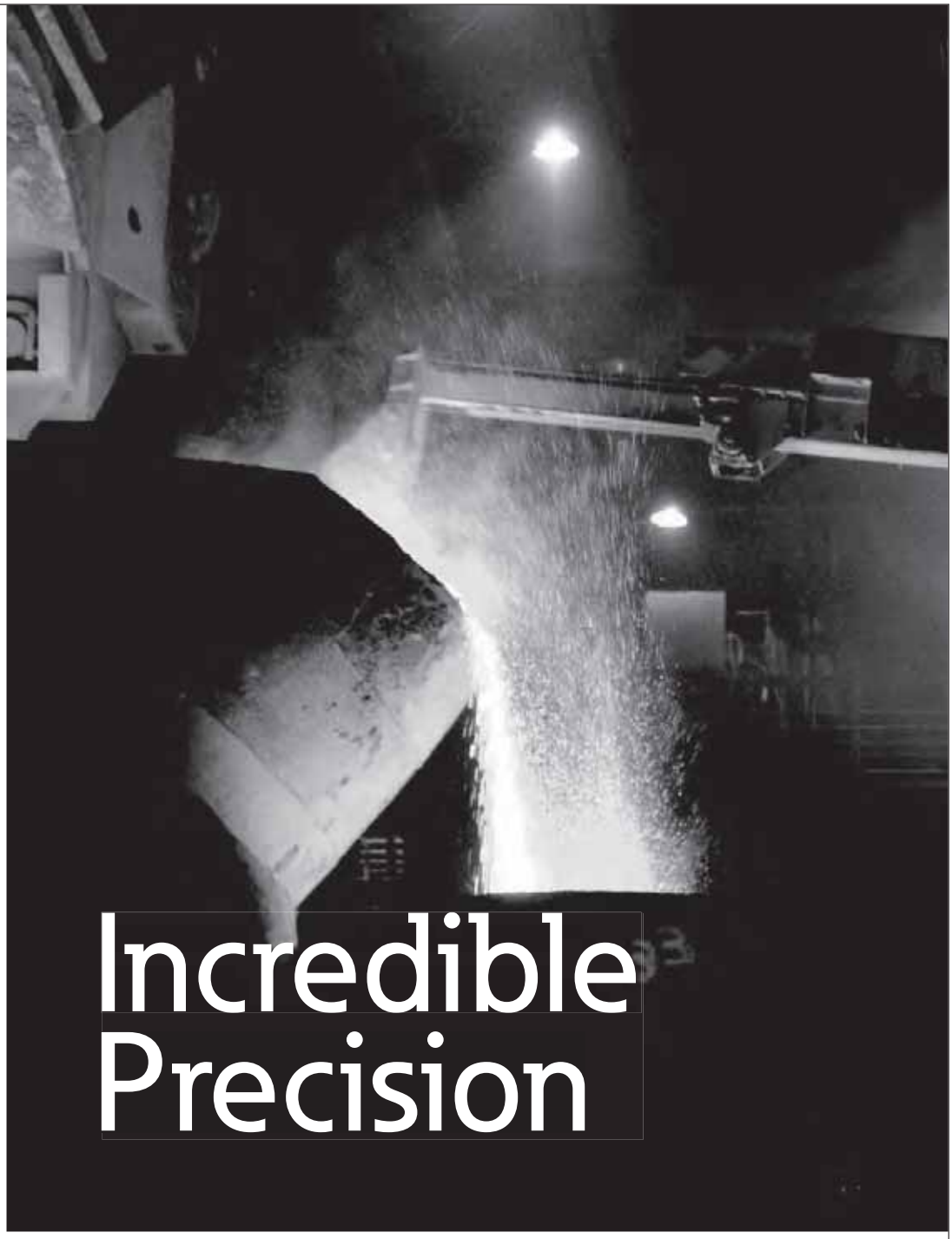

EATON
Powering Business Worldwide

Hydrokraft Pumps & Motors



- Hydrokraft Axial Piston Pumps and Motors
- 4cir to 45cir (66ccm to 750ccm)
- Wide Range of Controls

Circuit maker solutions

Screw-in cartridge valve packages for applications up to 350 bar (5000 psi) and 300 L/min (80 USgpm)

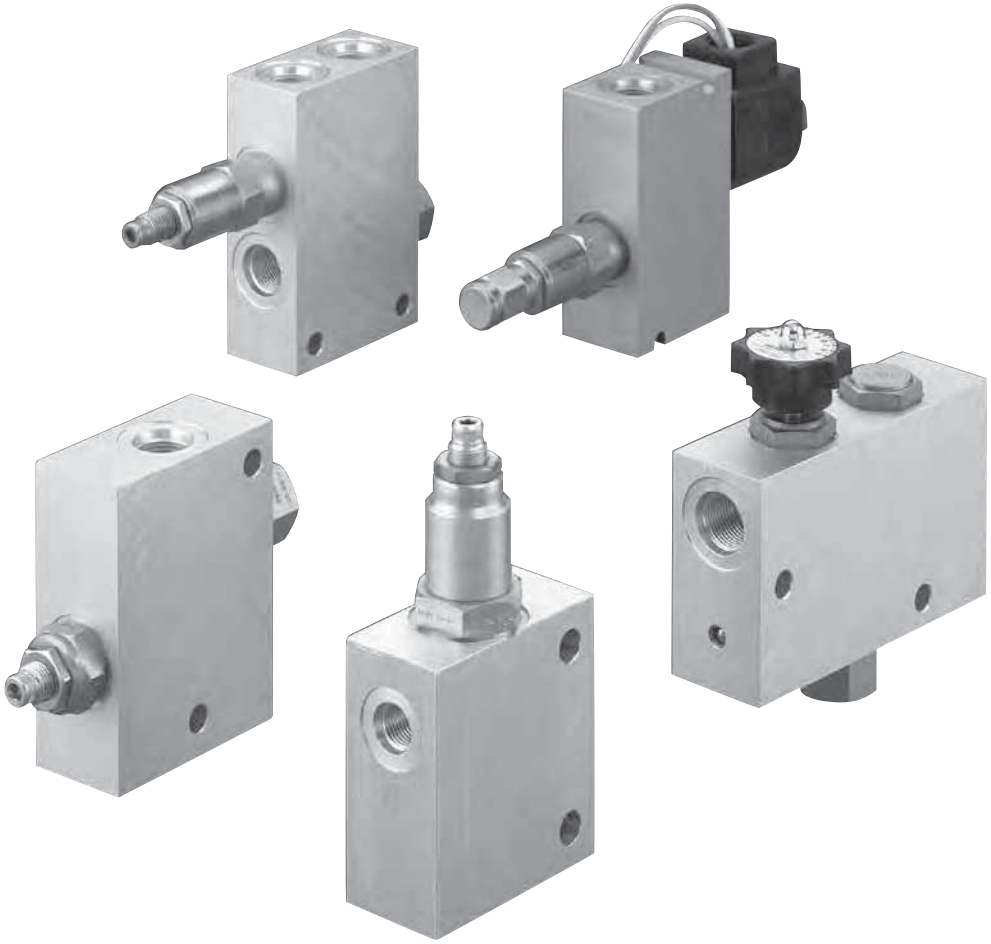

Powering Business Worldwide

Circuit maker solutions

Circuit maker solutions K-4
FC-1 - Flow control K-10
FC-2 - Flow control K-12
FC-3 - Flow control K-14
FC-4 - Flow control K-16
FRC-1 - Flow control K-18
FRC-2 - Flow control K-20
FRC-3 - Flow control K-22
FRC-4 - Flow control K-24
PCC1-12 - Pump control K-26
PCC1-16 - Pump control K-28
PCC2-12 - Pump control K-30
PCC2-16 - Pump control K-32
PFRR-8 - Flow control K-34
PFRR-10 - Flow control K-36
PFRR-16 - Flow control K-38
SRV-8 - Unloading/Relief valve K-40
SRV-10 - Unloading/Relief valve K-42
SRV-12 - Solenoid vented relief valve K-44
SRV-16 - Solenoid vented relief valve K-46
SRV-20 - Solenoid vented relief valve K-48
CRV-10 - Relief valve K-50
CRV-16 - Relief valve K-52
RGV-30 - Regenerative valve K-54
RGV-90 - Regenerative valve K-56
RLV-30 - Regenerative valve K-58
RLV-90 - Regenerative valve K-60
SCR-1 - Cross port relief K-62
1UL255 - Unloading valve K-64
Special housings - bolt on solutions K67
Dual cross-over relief package for H&T series motors K-68
Dual cross-over relief package for 2000 series disc valve motors K69
1CESHHT35/1CEESHHT35 - Motor mounted valves K-70
1CESH2K95/1CEESH2K95 - Motor mounted valves K-72
1CLLROMP150 - Motor mounted relief K-74
1CEOMP35/1CEEOMP35 - Motor mounted valves K-78
1CEHT35/1CEEHT35 - Motor mounted valves K-79
1CE2K95/1CEE2K95 - Motor mounted valves K-81
1CEOMP35/1CEEOMP35 - Motor mounted valves K-83
1CESHOMP35/1CEESHOMP35 - Motor mounted valves K-86
1CESHOMS95/1CEESHOMS95 - Motor mounted valves K-88

Circuit maker solutions

Valve locator

Functional symbol

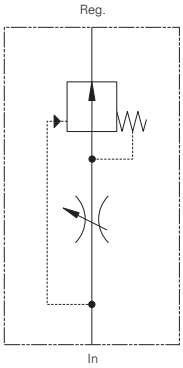

Model	Cavity	Flow rating	Typical pressure	Page
Flow control, full range adjustable		**L/min (USgpm)**	**bar (psi)**	
FC-1	Inline	36 (9)	210 (3000)	K-10
FC-2	Inline	57 (15)	210 (3000)	K-12
FC-3	Inline	114 (30)	210 (3000)	K-14
FC-4	Inline	190 (50)	210 (3000)	K-16

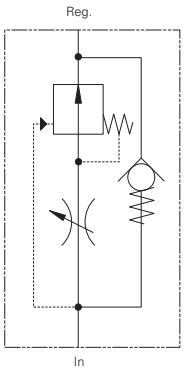

Model	Cavity	Flow rating	Typical pressure	Page
Flow control, full range adjustable		**L/min (USgpm)**	**bar (psi)**	
FRC-1	Inline	36 (9)	210 (3000)	K-18
FRC-2	Inline	57 (15)	210 (3000)	K-20
FRC-3	Inline	114 (30)	210 (3000)	K-22
FRC-4	Inline	190 (50)	210 (3000)	K-24

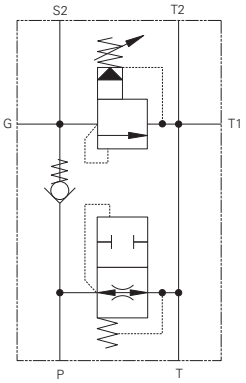

Model	Cavity	Flow rating	Typical pressure	Page
Pump control, single pump circulation		**L/min (USgpm)**	**bar (psi)**	
PCC1-12	Inline	114 (30)	210 (3000)	K-26
PCC1-16	Inline	228 (60)	210 (3000)	K-28

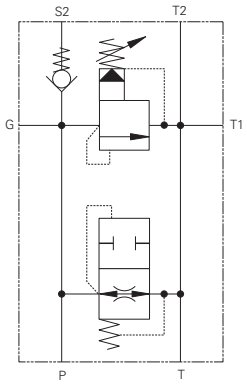

Model	Cavity	Flow rating	Typical pressure	Page
Pump control, single pump circulation		**L/min (USgpm)**	**bar (psi)**	
PCC2-12	Inline	114 (30)	5-210 (3000)	K-30
PCC2-16	Inline	228 (60)	10-210 (3000)	K-32

K

Where measurements are critical request certified drawings. We reserve the right to change specifications without notice.

Functional symbol

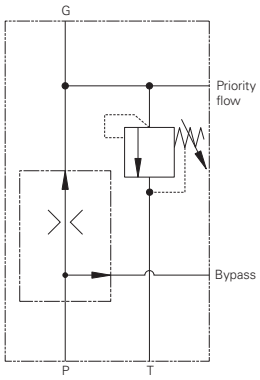

Model	Cavity	Flow rating	Typical pressure	Page
Flow control, relief on priority flow		**L/min (USgpm)**	**bar (psi)**	
PFRR-8	Inline	15 (4)	7-210 (3000)	K-34
PFRR-10	Inline	57 (15)	7-210 (3000)	K-36
PFRR-16	Inline	152 (40)	7-210 (3000)	K-38

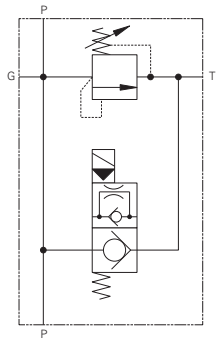

Model	Cavity	Flow rating	Typical pressure	Page
Relief valve, solenoid actuated		**L/min (USgpm)**	**bar (psi)**	
SRV-8	Inline	23 (6)	210 (3000)	K-40
SRV-10	Inline	57 (15)	210 (3000)	K-42
SRV-12	Inline	114 (30)	210 (3000)	K-44
SRV-16	Inline	225 (60)	210 (3000)	K-46
SRV-20	Inline	300 (80)	210 (3000)	K-48

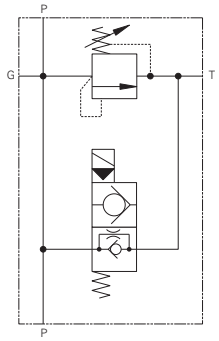

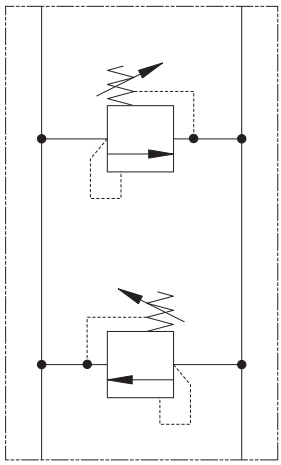

Model	Cavity	Flow rating	Typical pressure	Page
Cross port relief		**L/min (USgpm)**	**bar (psi)**	
CRV-10	Inline	26 (20)	210 (3000)	K-50
CRV-16	Inline	303 (80)	172 (2500)	K-52

K

Where measurements are critical request certified drawings. We reserve the right to change specifications without notice.

Circuit maker solutions

Valve locator

Functional symbol

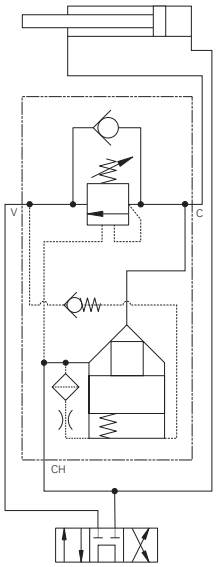

Model	Cavity	Flow rating	Typical pressure	Page
Regenerative valve, pressure		**L/min (USgpm)**	**bar (psi)**	
RGV-30	Inline	57 (15)	210 (3000)	K-54
RGV-90	Inline	114 (30)	210 (3000)	K-56

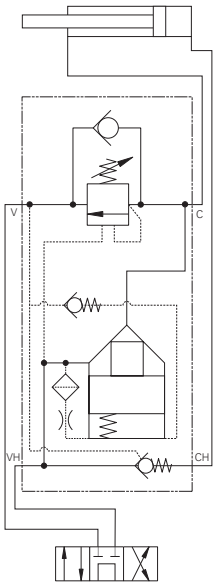

Model	Cavity	Flow rating	Typical pressure	Page
Regenerative valve, pressure		**L/min (USgpm)**	**bar (psi)**	
RLV-30	Inline	57 (15)	210 (3000)	K-58
RLV-90	Inline	114 (30)	210 (3000)	K-60

K

Where measurements are critical request certified drawings. We reserve the right to change specifications without notice.

Functional symbol

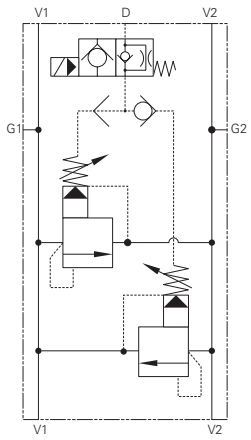

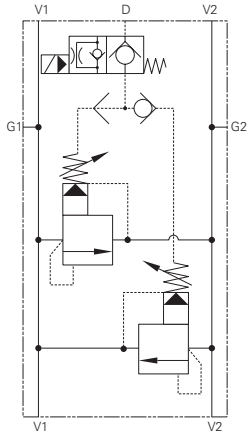

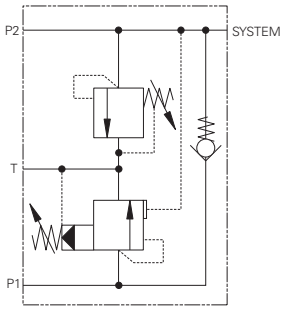

Model	Cavity	Flow rating	Typical pressure	Page
Relief valve, cross port solenoid		**L/min (USgpm)**	**bar (psi)**	
SCR-1		114 (30)	210 (3000)	K-62

Model	Cavity	Flow rating	Typical pressure	Page
Unloading valve		**L/min (USgpm)**	**bar (psi)**	
1UL255		200 (52)	350 (5000)	K-64

K

Where measurements are critical request certified drawings. We reserve the right to change specifications without notice.

Circuit maker solutions

Valve locator

Functional symbol

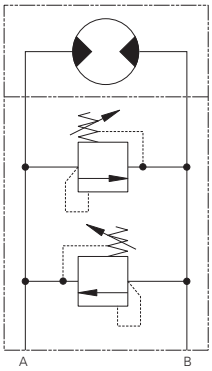

Model	Cavity	Flow rating	Typical pressure	Page
Motor mounted relief		**L/min (USgpm)**	**bar (psi)**	
H & T Motors		76 (20)	210 (3000)	K-68
2000 Motors		76 (20)	210 (3000)	K-69
OMP		150 (40)	350 (5000)	K-74
OMS		150 (40)	350 (5000)	K--

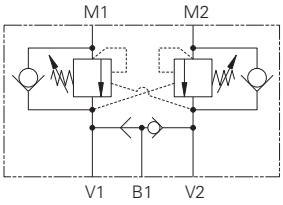

Model	Cavity	Flow rating	Typical pressure	Page
Motor mounted OCV with brake shuttle		**L/min (USgpm)**	**bar (psi)**	
H & T Motors		60 (15)	210 (3000)	K-70
2000 Motors		60 (15)	210 (3000)	K-72
OMP		30 (8)	270 (4000)	K-74
OMS		90 (23)	270 (4000)	K-76

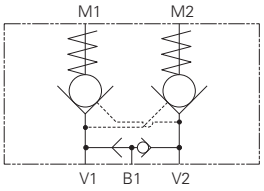

Model	Cavity	Flow rating	Typical pressure	Page
Motor mounted P.O. check with brake shuttle		**L/min (USgpm)**	**bar (psi)**	
H & T Motors		60 (15)	210 (3000)	K-78
2000 Motors		60 (15)	210 (3000)	K-80

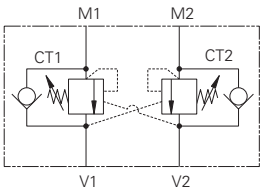

Model	Cavity	Flow rating	Typical pressure	Page
Motor mounted OCV		**L/min (USgpm)**	**bar (psi)**	
OMP		30 (8)	270 (4000)	K-83
OMS		90 (23)	270 (4000)	K-85

K

Where measurements are critical request certified drawings. We reserve the right to change specifications without notice.

What are circuit makers?

Circuit Maker Products are pre-engineered packages. These packages are designed with from 2 to 4 screw–in cartridge valves for generic, repetitive circuit control functions.

All of the products in this catalog are rated at 210 bar (3000 psi) and have either SAE or BSPP port options. Our selection of Circuit Maker pre-engineered packages consists of the following basic units:

- Single and multiple pump control packages
- Solenoid actuated relief valve packages
- Flow control packages
- Cross port relief packages
- Cross port relief with shuttle and solenoid vent
- Pressure sensitive regeneration packages with and without load locking
- Motor mounted counterbalance valve
- Motor mounted PO check valves
- Motor mounted relief valves

Typical applications

Circuit Maker packages can be used in a wide variety of stationary and, on and off highway applications. The are designed to solve a multitude of repeatable, generic application requirements that are encountered in day to day hydraulic circuits. These packages are ideal solutions for specialty machine requirements and low volume options on high volume applications.

Pump control packages –

These are suitable for any single or multiple pump application where individual pump output flow does not exceed 228 l/min (60 USgpm). They are used to provide air-bleed, start-up and relief protection.

Solenoid actuated relief valve packages –

These can be used wherever remote relief or venting control is required for flows up to 300 L/min (80 USgpm). Normally open versions lend themselves to markets where fail safe and "dead man" control are important. Normally closed versions lend themselves to markets such as machine tool, where energy savings can be obtained by selective unloading of pump flow.

Flow control packages –

These packages are used with both fixed and variable pump systems to provide constant output flow for the main or branch circuits. Packages offered provide for maintaining either:

- Cylinder or motor speed; free reverse flow for table positioning, conveyor systems and presses.
- Controlled flow for steering systems.

Cross port relief valve packages –

These packages are used with bi-directional actuators. The circuit maker provides actuator protection from overload conditions.

Pressure sensitive regeneration packages –

Pressure sensitive regeneration packages provide a means of extending a cylinder as fast as possible without additional pump flow by diverting rod end flow to the head end to accelerate the load. When the pressure in the head end reaches a predetermined level related to the load, the valve closes off and the cylinder returns to normal speed. Typical applications are for outriggers/ stabilizers in mobile markets and machine tool traverse in industrial markets.

Pressure sensitive regeneration packages with load locking –

Pressure sensitive regeneration packages provide a means of extending a cylinder as fast as possible without additional pump flow by diverting rod end flow to the head end to accelerate the load. When the pressure in the head end reaches a predetermined level related to the load, the valve closes off and the cylinder returns to normal speed. The load locking feature provides stability as the system is now working with an oil column under pressure in addition to the mechanical structure. Typically used with mobile crane and other similar vehicles to ensure stability when swinging loads. This package has an advantage over alternative systems that use solenoid actuated blocking pins. In the event of a power failure, it is still possible to lower the vehicle/load.

Features and Benefits

- Quick solutions that are ready to use
- Quick delivery at low cost
- Flexibility

Quick solutions:

Circuit Maker packages are pre-engineered packaged solutions for generic, repeatable requirements. They have specific coil voltage, coil connector, flow settings adjustment and pressure setting adjustment options that permit tailoring to application requirements.

Quick delivery/low cost:

Circuit Maker packages have already been engineered to satisfy generic, repetitive circuit needs. There are no scheduling or time related problems, or engineering charges to be recovered.

Flexibility:

Screw-in cartridge valves and housings are sold either separately or as pre–assembled packages. This permits last minute assembly of packages and local tailoring of individual valve options.

K

Where measurements are critical request certified drawings. We reserve the right to change specifications without notice.

FC-1 - Flow control

Pressure compensated, restrictive type, full range adjustable
Up to 36 L/min (9 USgpm) • 210 bar (3000 psi)

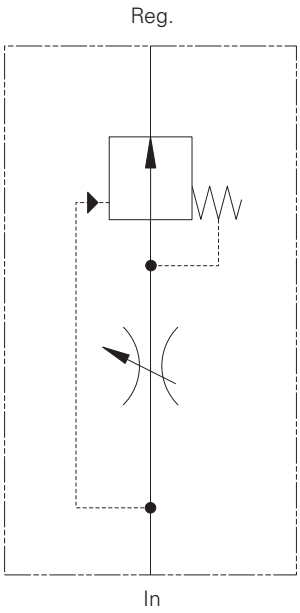

Operation

This standard valve package is used in a circuit where flow rates must be constantly maintained, regardless of changes in upstream or downstream pressure.

Also where a full range of flow adjustments is required.

Features

Pressure compensation, full flow range adjustment, aluminum in-line type housing, Screw and knob adjustment options. All components in the package are true cartridges and can be removed from the housing without disturbing the plumbing.

Performance data

Ratings and specifications

Performance data is typical with fluid at 21,8 cST (105 SUS) and 49° C (120°F)	
Typical application pressure (all ports)	210 bar (3000 psi)
Maximum regulated flow	Up to 36 L/min (9 USgpm)
Temperature range	-40° to 120°C (-40° to 248°F)
Fluids	All general purpose hydraulic fluids such as: MIL-H-5606, SAE 10, SAE 20, etc.

Viton is a registered trademark of E. I. DuPont

Description

Full range adjustable restrictive pressure compensated flow control package

Performance characteristics

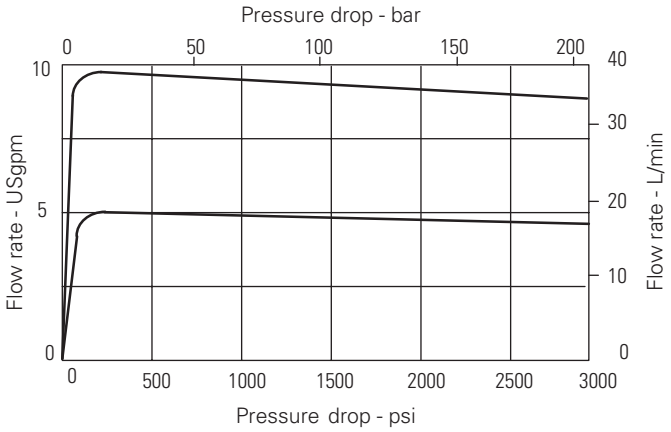

K

Where measurements are critical request certified drawings. We reserve the right to change specifications without notice.

FC-1 - Flow control

Pressure compensated, restrictive type, full range adjustable
Up to 36 L/min (9 USgpm) • 210 bar (3000 psi)

Model code

FC	–	1	(V)	–	A	**	–	**	–	00
1		2	3		4	5		6		7

1 Function

FC - Fully adjustable pressure compensated flow control

2 Maximum rated flow

1 - 34 L/min (9 USgpm)

3 Seal material

Blank - Buna-N
V - Viton®
Viton is a registered trademark of E. I. DuPont.

4 Valve housing material

A - Aluminum

5 Port size

Code	Port size	Housing number
4G	1/2" BSPP	02-178279
8T	SAE 8	02-178280

6 Adjustment type

	Flow rate
K1 - Knob*	19 L/min (5 USgpm)
K2 - Knob	34 L/min (9 USgpm)
S1 - Screw	34 L/min (9 USgpm)
H1 - Handwheel	34 L/min (9 USgpm)

*180˚ rotation

7 Special features

00 - None

(Only required if valve has special features, omitted if "00".)

Composition chart

Adjustment	Cartridge	Description	Maximum flow
K1 Knob	MRV2-10-K-0-05	Flow restrictor, adjustable, semi-rotary spool	19 L/min (5 USgpm)
K2 - Knob	MRV2-10-K-0-10	Flow restrictor, adjustable, semi-rotary spool	34 L/min (9 USgpm)
S1 - Screw	FCV7-10-S-0-NV	Flow restrictor, adjustable, needle type	34 L/min (9 USgpm)
H1 - Hand Knob	FCV7-10-K-0-NV	Flow restrictor, adjustable, needle type	34 L/min (9 USgpm)
–	PCS3-10-0-80	Pressure compensator, spool type	40 L/min (12 USgpm)

Dimensions

mm (inch)

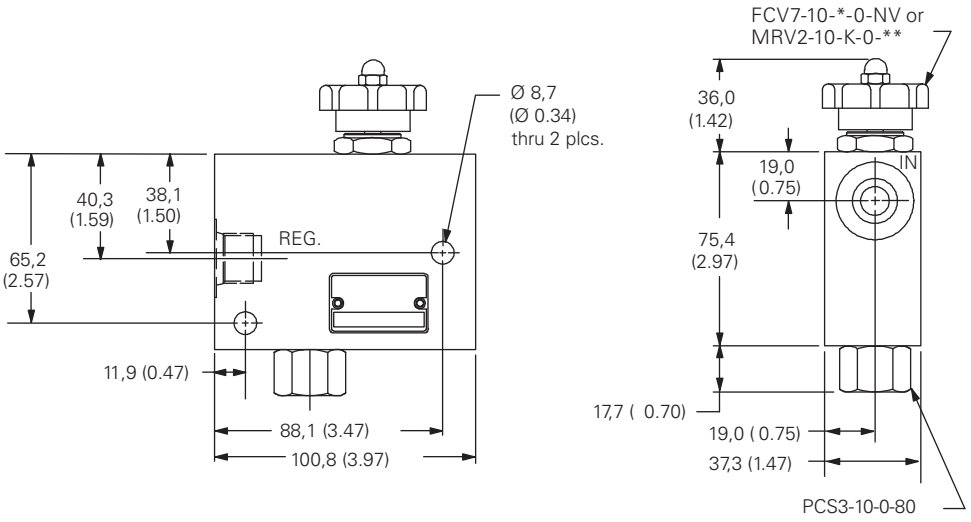

Where measurements are critical request certified drawings. We reserve the right to change specifications without notice.

FC-2 - Flow control

Pressure compensated, restrictive type, full range adjustable
Up to 57 L/min (15 USgpm) • 210 bar (3000 psi)

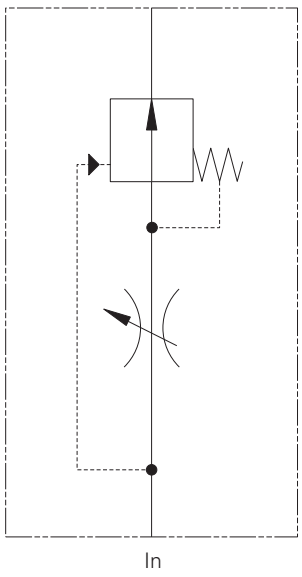

Operation

This standard valve package is used in a circuit where flow rates must be constantly maintained, regardless of changes in upstream or downstream pressure.

Also where a full range of flow adjustments is required.

Features

Pressure compensation, full flow range adjustment, aluminum in-line type housing, Screw and knob adjustment options. All components in the package are true cartridges and can be removed from the housing without disturbing the plumbing.

Performance data

Ratings and specifications

Performance data is typical with fluid at 21,8 cST (105 SUS) and 49°C (120°F)	
Typical application pressure (all ports)	210 bar (3000 psi)
Maximum regulated flow	Up to 57 L/min (15 USgpm)
Temperature range	-40° to 120°C (-40° to 248°F)
Fluids	All general purpose hydraulic fluids such as: MIL-H-5606, SAE 10, SAE 20, etc.

Description

Full range adjustable restrictive pressure compensated flow control package.

Performance characteristics

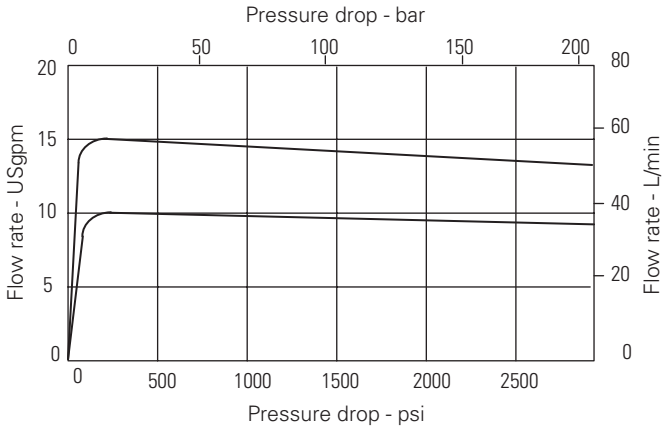

K

Where measurements are critical request certified drawings. We reserve the right to change specifications without notice.

FC-2 - Flow control

Pressure compensated, restrictive type, full range adjustable
Up to 57 L/min (15 USgpm) • 210 bar (3000 psi)

Model code

FC	–	2	(V)	–	A	**	–	**	–	00
1		2	3		4	5		6		7

1 Function

FC - Fully adjustable pressure compensated flow control

2 Maximum rated flow

2 - 57 L/min (15 USgpm)

3 Seal material

Blank - Buna-N
V - Viton®

Viton is a registered trademark of E.I. DuPont

4 Valve housing material

A - Aluminum

5 Port size

Code	Port size	Housing number
6G	3/4" BSPP	02-178281
12T	SAE 12	02-178282

6 Adjustment type / Flow rate

K1 - Knob*	38 L/min (10 USgpm)
K2 - Knob	57 L/min (15 USgpm)
S1 - Screw	57 L/min (15 USgpm)
H1 - Handwheel	57 L/min (15 USgpm)

*180˚ rotation

7 Special features

00 - None
(Only required if valve has special features, omitted if "00".)

Composition chart

Adjustment	Cartridge	Description	Maximum flow
K1 Knob	MRV2-10-K-0-10	Flow restrictor, adjustable, semi-rotary spool	38 L/min (10 USgpm)
K2 - Knob	MRV2-10-K-0-15	Flow restrictor, adjustable, semi-rotary spool	57 L/min (15 USgpm)
S1 - Screw	FCV7-10-S-0-NV	Flow restrictor, adjustable, needle type	57 L/min (15 USgpm)
H1 - Hand Knob	FCV7-10-K-0-NV	Flow restrictor, adjustable, needle type	57 L/min (15 USgpm)
–	PCS3-16-0-80	Pressure compensator, spool type	114 L/min (30 USgpm)

Dimensions

mm (inch)

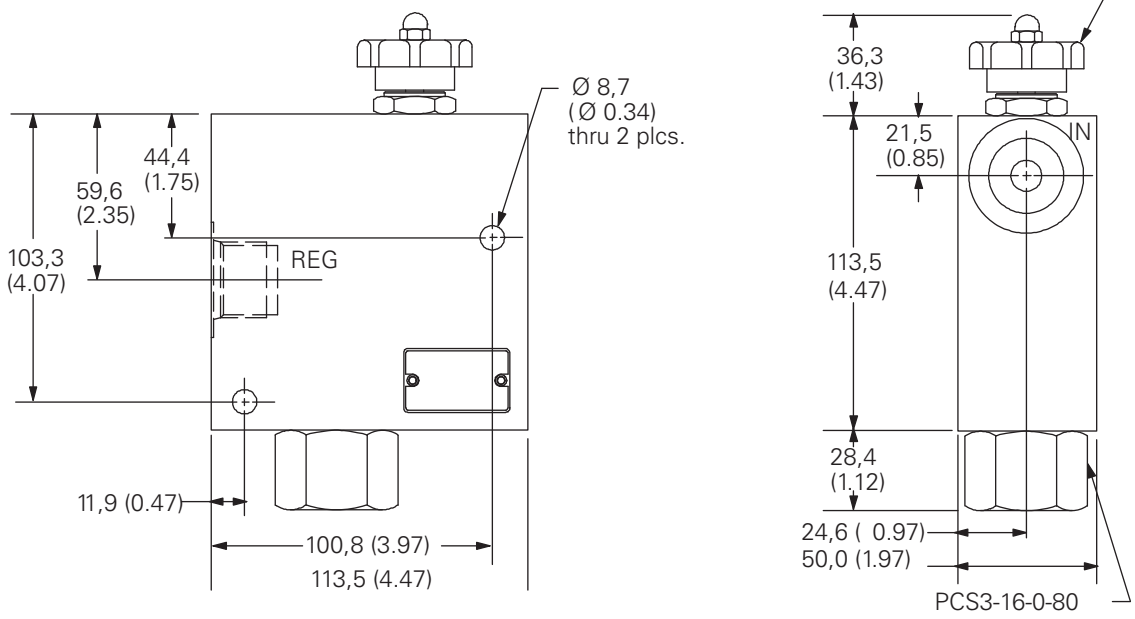

Where measurements are critical request certified drawings. We reserve the right to change specifications without notice.

FC-3 - Flow control

Pressure compensated, restrictive type, full range adjustable
Up to 114 L/min (30 USgpm) • 210 bar (300 psi)

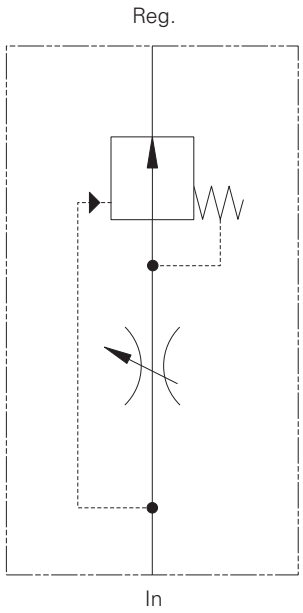

Operation

This standard valve package is used in a circuit where flow rates must be constantly maintained, regardless of changes in upstream or downstream pressure.

Also where a full range of flow adjustments is required.

Features

Pressure compensation, full flow range adjustment, aluminum in-line type housing, Screw and knob adjustment options. All components in the package are true cartridges and can be removed from the housing without disturbing the plumbing.

Performance data

Ratings and specifications

Performance data is typical with fluid at 21,8 cST (105 SUS) and 49°C (120°F)	
Typical application pressure (all ports)	210 bar (3000 psi)
Maximum regulated flow	Up to 114 L/min (30 USgpm)
Temperature range	-40° to 120°C (-40° to 248°F)
Fluids	All general purpose hydraulic fluids such as: MIL-H-5606, SAE 10, SAE 20, etc.

Description

Full range adjustable restrictive pressure compensated flow control package.

Performance characteristics

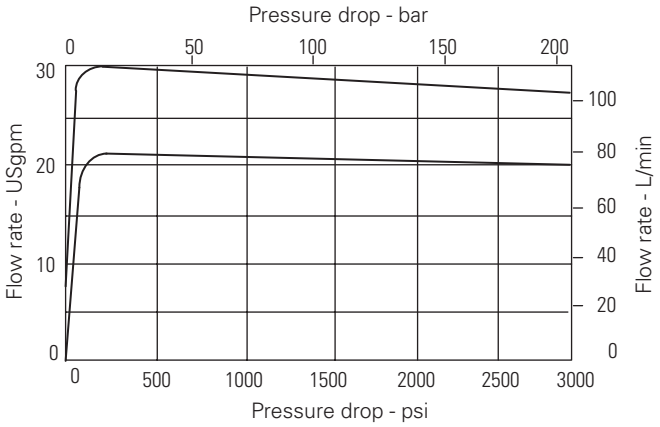

K

Where measurements are critical request certified drawings. We reserve the right to change specifications without notice.

FC-3 - Flow control

Pressure compensated, restrictive type, full range adjustable
Up to 114 L/min (30 USgpm) • 210 bar (300 psi)

Model code

FC	–	3	(V)	–	A	**	–	**	–	00
1		2	3		4	5		6		7

1 Function

FC - Fully adjustable pressure compensated flow control

2 Maximum rated flow

3 - 114 L/min (30 USgpm)

3 Seal material

Blank - Buna-N
V - Viton®

Viton is a registered trademark of E.I. DuPont

4 Valve housing material

A - Aluminum

5 Port size

Code	Port size	Housing number
8G	1" BSPP	02-178283
16T	SAE 16	02-178284

6 Adjustment type

	Flow rate
K1 - Knob*	76 L/min (20 USgpm)
K2 - Knob	114 L/min (30 USgpm)
S1 - Screw	114 L/min (30 USgpm)
H1 - Handwheel	114 L/min (30 USgpm)

*180˚ rotation

7 Special features

00 - None

(Only required if valve has special features, omitted if "00".)

Composition chart

Adjustment	Cartridge	Description	Maximum flow
K1 - Knob	MRV2-16-K-0-20	Flow restrictor, adjustable, semi-rotary spool	76 L/min (20 USgpm)
K2 - Knob	MRV2-16-K-0-30	Flow restrictor, adjustable, semi-rotary spool	114 L/min (30 USgpm)
S1 - Screw	FCV6-16-S-0-NV	Flow restrictor, adjustable	114 L/min (30 USgpm)
H1 - Hand Knob	FCV6-16-K-0-NV	Flow restrictor, adjustable	114 L/min (30 USgpm)
–	PCS3-16-0-80	Pressure compensator, spool type	114 L/min (30 USgpm)

Dimensions

mm (inch)

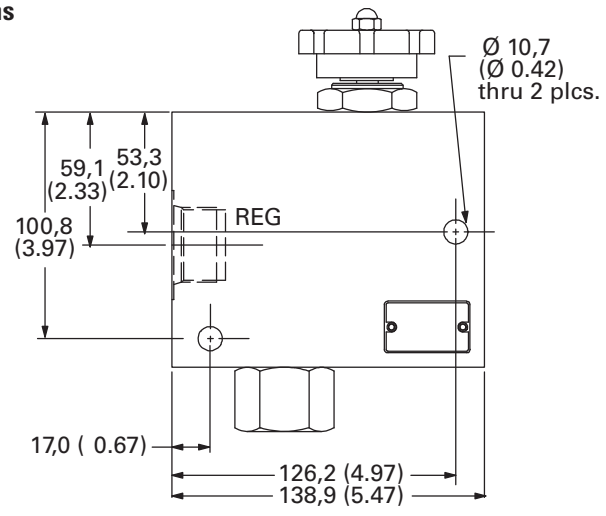

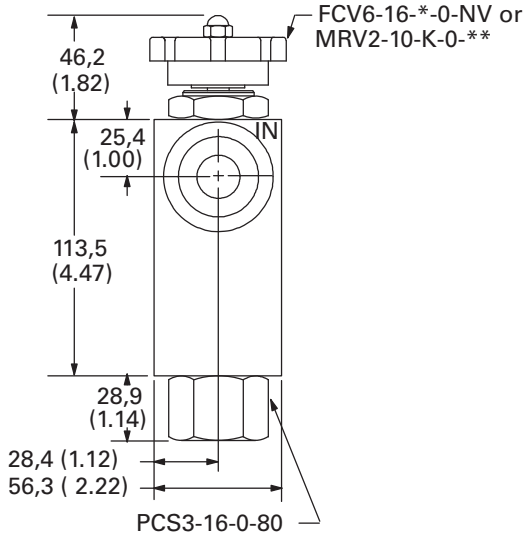

Where measurements are critical request certified drawings. We reserve the right to change specifications without notice.

FC-4 - Flow control

Pressure compensated, restrictive type, full range adjustable
Up to 190 L/min (50 USgpm) • 210 bar (3000 psi)

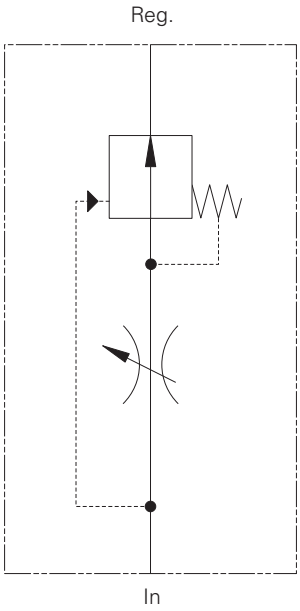

Operation

This standard valve package is used in a circuit where flow rates must be constantly maintained, regardless of changes in upstream or downstream pressure.

Also where a full range of flow adjustments is required.

Features

Pressure compensation, full flow range adjustment, aluminum in-line type housing, Screw and knob adjustment options. All components in the package are true cartridges and can be removed from the housing without disturbing the plumbing.

Performance data

Ratings and specifications

Performance data is typical with fluid at 21,8 cST (105 SUS) and 49°C (120°F)	
Typical application pressure (all ports)	210 bar (3000 psi)
Maximum regulated flow	Up to 190 L/min (50 USgpm)
Temperature range	-40° to 120°C (-40° to 248°F)
Fluids	All general purpose hydraulic fluids such as: MIL-H-5606, SAE 10, SAE 20, etc.

Description

Full range adjustable restrictive pressure compensated flow control package.

Pressure Characteristics

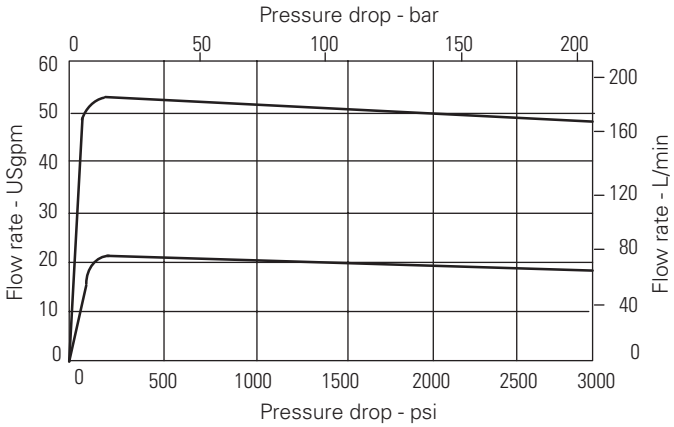

Where measurements are critical request certified drawings. We reserve the right to change specifications without notice.

FC-4 - Flow control

Pressure compensated, restrictive type, full range adjustable
Up to 190 L/min (50 USgpm) • 210 bar (3000 psi)

Model code

FC	–	4	(V)	–	A	**	–	**	–	00
1		2	3		4	5		6		7

1 Function

FC - Fully adjustable pressure compensated flow control

2 Size

4 - 190 L/min (50 USgpm)

3 Seal material

Blank - Buna-N
V - Viton®

Viton is a registered trademark of E.I. DuPont

4 Valve housing material

A - Aluminum

5 Port size

Code	Port size	Housing number
12G	1 1/4" BSPP	02-178285
20T	SAE 20	02-178286

6 Adjustment type | **Flow rate**

K1 - Knob* | 190 L/min (50 USgpm)

*180˚ rotation

7 Special features

00 - None

(Only required if valve has special features, omitted if "00".)

Composition chart

Adjustment	Cartridge	Description	Maximum flow
K1 - Knob	NV1-20-K-0	Needle Valve	190 L/min (50 USgpm)
–	PCS3-20-0-80	Pressure compensator, spool type	200 L/min (53 USgpm)

Dimensions

mm (inch)

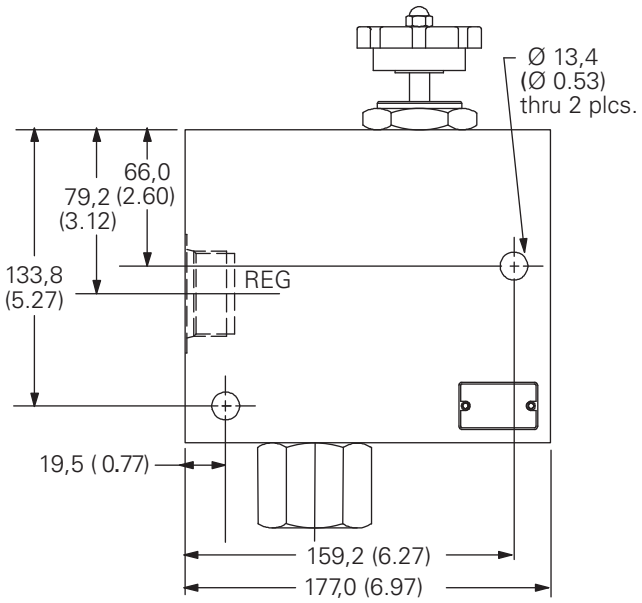

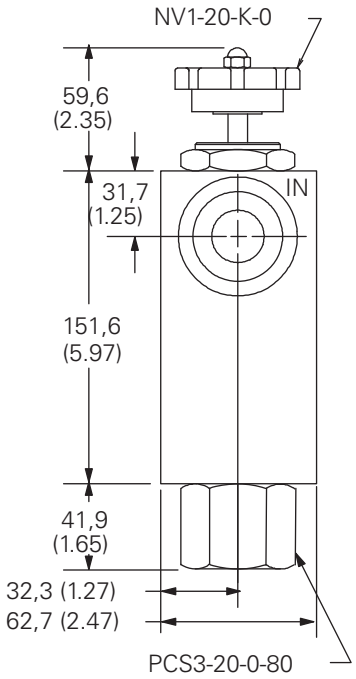

K

Where measurements are critical request certified drawings. We reserve the right to change specifications without notice.

FRC-1 - Flow control

Pressure compensated, restrictive type, full range adjustable with reverse flow check
Up to 36 L/min (9 USgpm) • 210 bar (3000 psi)

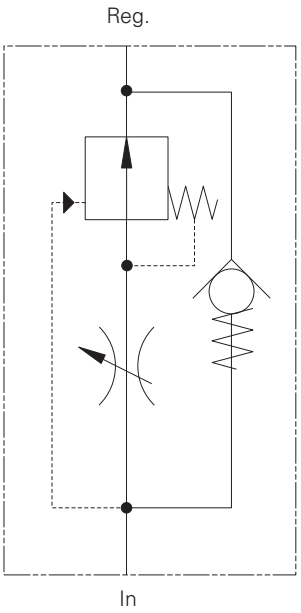

Operation

This standard valve package is used in a hydraulic circuit where flow rates must be constantly maintained, regardless of changes in upstream or downstream pressure.

Also where a full range of flow adjustments is required. It also provides free reverse flow.

Features

Pressure compensation, full flow range adjustment, aluminum in-line type housing, Screw and knob adjustment options. All components in the package are true cartridges and can be removed from the housing without disturbing the plumbing.

Performance data

Ratings and specifications

Performance data is typical with fluid at 21,8 cST (105 SUS) and 49°C (120°F)	
Typical application pressure (all ports)	210 bar (3000 psi)
Maximum regulated flow	Up to 36 L/min (9 USgpm)
Temperature range	-40° to 120°C (-40° to 248°F)
Fluids	All general purpose hydraulic fluids such as: MIL-H-5606, SAE 10, SAE 20, etc.

Description

Full range adjustable restrictive pressure compensated flow control package with free reverse flow.

Performance characteristics

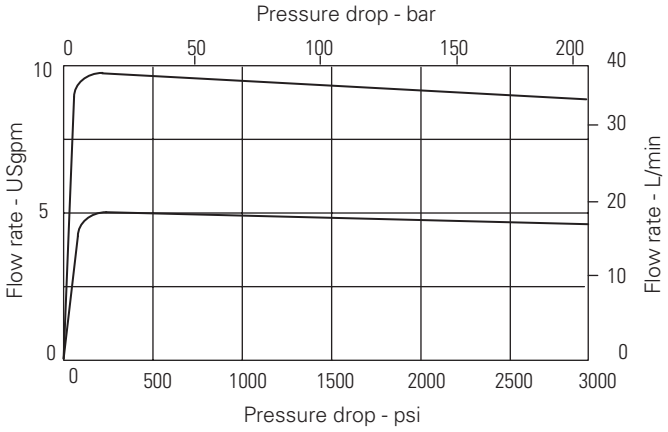

K

Where measurements are critical request certified drawings. We reserve the right to change specifications without notice.

FRC-1 - Flow control

Pressure compensated, restrictive type, full range adjustable with reverse flow check
Up to 36 L/min (9 USgpm) • 210 bar (3000 psi)

Model code

FRC	–	1	(V)	–	A	**	–	**	–	00
1		2	3		4	5		6		7

1 Function

FRC - Fully adjustable pressure compensated flow control with reverse flow check

2 Maximum rated flow

1 - 34 L/min (9 USgpm)

3 Seal material

Blank - Buna-N
V - Viton®

Viton is a registered trademark of E.I. DuPont

4 Valve housing material

A - Aluminum

5 Port size

Code	Port size	Housing number
4G	1/2" BSPP	02-178287
8T	SAE 8	02-178288

6 Adjustment type

Adjustment type	Flow rate
K1 - Knob*	19 L/min (5 USgpm)
K2 - Knob	34 L/min (9 USgpm)
S1 - Screw	34 L/min (9 USgpm)
H1 - Handwheel	34 L/min (9 USgpm)

*180˚ rotation

7 Special features

00 - None

(Only required if valve has special features, omitted if "00".)

Composition chart

Adjustment	Cartridge	Description	Maximum flow
K1 - Knob	MRV2-10-K-0-05	Flow restrictor, adjustable, semi-rotary spool	19 L/min (5 USgpm)
K2 - Knob	MRV2-10-K-0-10	Flow restrictor, adjustable, semi-rotary spool	34 L/min (9 USgpm)
S1 - Screw	FCV7-10-S-0-NV	Flow restrictor, adjustable, needle type	34 L/min (9 USgpm)
H1 - Hand Knob	FCV7-10-K-0-NV	Flow restrictor, adjustable, needle type	34 L/min (9 USgpm)
–	CV3-10-P-0-10	Check valve	76 L/min (20 USgpm)
–	PCS3-10-0-80	Pressure compensator, spool type	40 L/min (12 USgpm)

Dimensions

mm (inch)

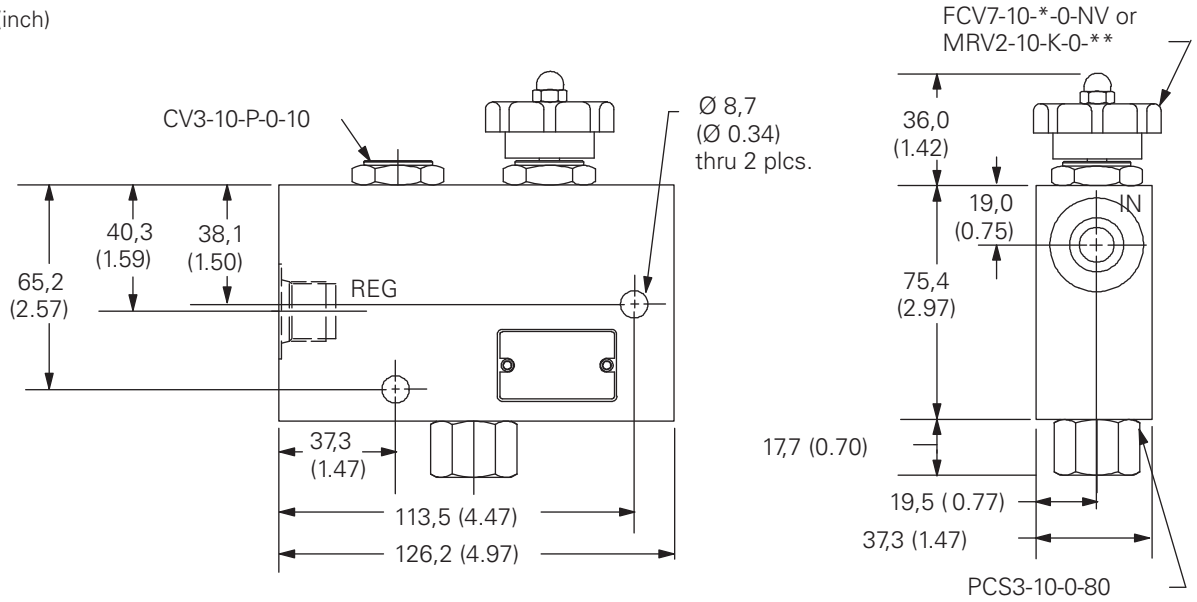

Where measurements are critical request certified drawings. We reserve the right to change specifications without notice.

FRC-2 - Flow control

Pressure compensated, restrictive type, full range adjustable with reverse flow check
Up to 57 L/min (15 USgpm) • 210 bar (3000 psi)

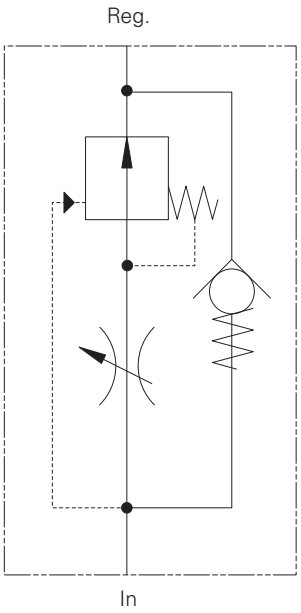

Operation

This standard valve package is used in a hydraulic circuit where flow rates must be constantly maintained, regardless of changes in upstream or downstream pressure.

Also where a full range of flow adjustments is required. It also provides free reverse flow.

Features

Pressure compensation, full flow range adjustment, aluminum in-line type housing, Screw and knob adjustment options. All components in the package are true cartridges and can be removed from the housing without disturbing the plumbing.

Description

Full range adjustable restrictive pressure compensated flow control package with free reverse flow.

Performance data

Ratings and specifications

Performance data is typical with fluid at 21,8 cST (105 SUS) and 49°C (120°F)	
Typical application pressure (all ports)	210 bar (3000 psi)
Maximum regulated flow	Up to 57 L/min (15 USgpm)
Temperature range	-40° to 120°C (-40° to 248°F)
Fluids	All general purpose hydraulic fluids such as: MIL-H-5606, SAE 10, SAE 20, etc.

Performance characteristics

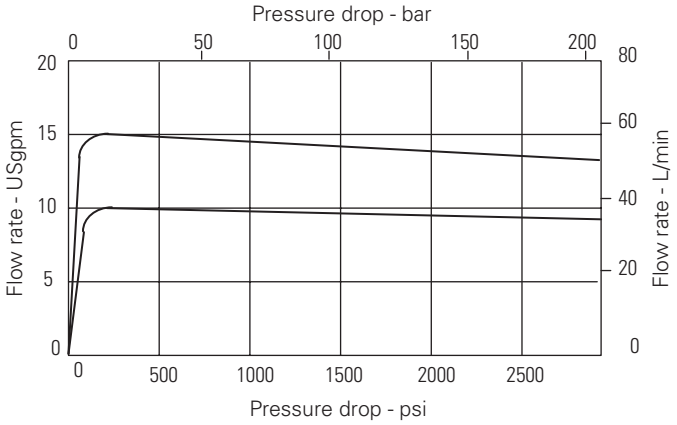

Where measurements are critical request certified drawings. We reserve the right to change specifications without notice.

FRC-2 - Flow control

Pressure compensated, restrictive type, full range adjustable with reverse flow check
Up to 57 L/min (15 USgpm) • 210 bar (3000 psi)

Model code

FRC	–	2	(V)	–	A	**	–	**	–	00
1		2	3		4	5		6		7

1 Function

FRC - Fully adjustable pressure compensated flow control with reverse flow check

2 Maximum rated flow

2 - 57 L/min (15 USgpm)

3 Seal material

Blank - Buna-N
V - Viton®

Viton is a registered trademark of E.I. DuPont

4 Valve housing material

A - Aluminum

5 Port size

Code	Port size	Housing number
6G	3/4" BSPP	02-178289
12T	SAE 12	02-178290

6 Adjustment type

	Flow rate
K1 - Knob*	38 L/min (10 USgpm)
K2 - Knob	57 L/min (15 USgpm)
S1 - Screw	57 L/min (15 USgpm)
H1 - Handwheel	57 L/min (15 USgpm)

*180˚ rotation

7 Special features

00 - None

(Only required if valve has special features, omitted if "00".)

Composition chart

Adjustment	Cartridge	Description	Maximum flow
K1 - Knob	MRV2-10-K-0-10	Flow restrictor, adjustable, semi-rotary spool	38 L/min (10 USgpm)
K2 - Knob	MRV2-10-K-0-15	Flow restrictor, adjustable, semi-rotary spool	57 L/min (15 USgpm)
S1 - Screw	FCV7-10-S-0-NV	Flow restrictor, adjustable, needle type	57 L/min (15 USgpm)
H1 - Hand Knob	FCV7-10-K-0-NV	Flow restrictor, adjustable, needle type	57 L/min (15 USgpm)
–	CV3-10-P-0-10	Check valve	76 L/min (20 USgpm)
–	PCS3-16-0-80	Pressure compensator, spool type	114 L/min (30 USgpm)

Dimensions

mm (inch)

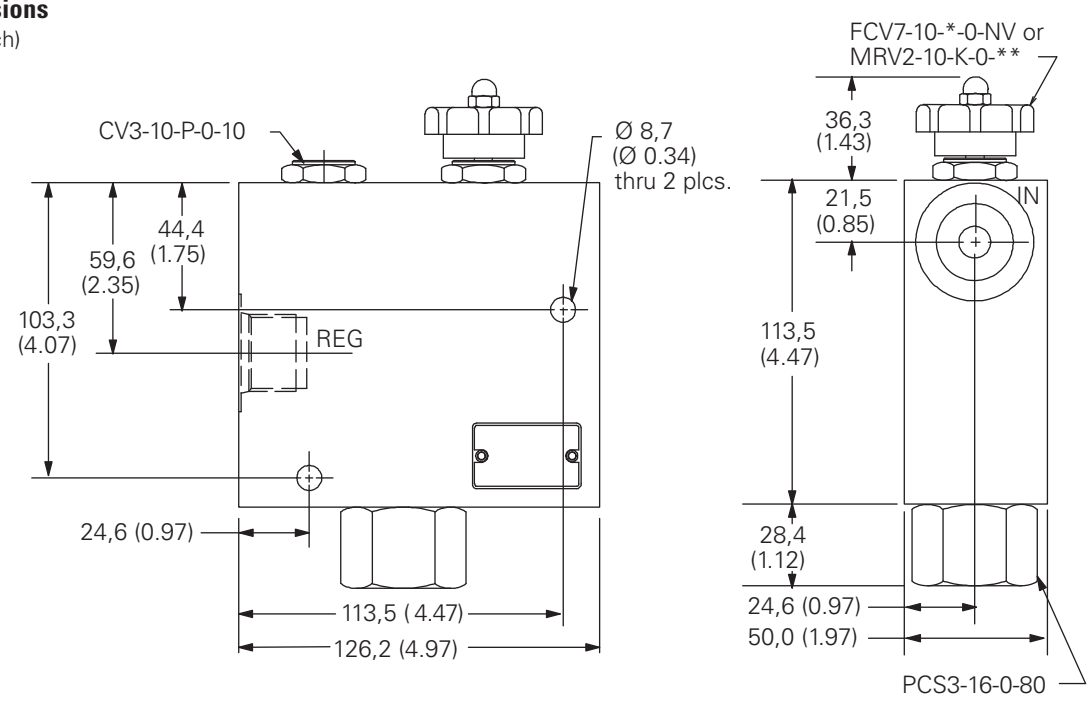

Where measurements are critical request certified drawings. We reserve the right to change specifications without notice.

FRC-3 - Flow control

Pressure compensated, restrictive type, full range adjustable with reverse flow check
Up to 114 L/min (30 USgpm) • 210 bar (3000 psi)

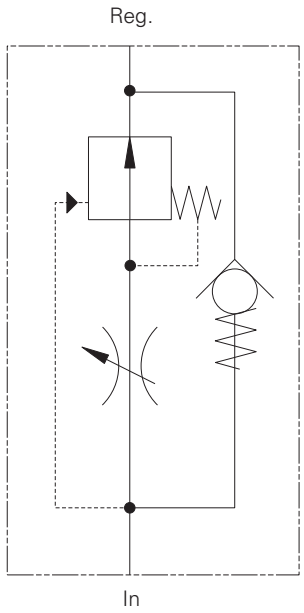

Operation

This standard valve package is used in a hydraulic circuit where flow rates must be constantly maintained, regardless of changes in upstream or downstream pressure.

Also where a full range of flow adjustments is required. It also provides free reverse flow.

Features

Pressure compensation, full flow range adjustment, aluminum in-line type housing, Screw and knob adjustment options. All components in the package are true cartridges and can be removed from the housing without disturbing the plumbing.

Performance data

Ratings and specifications

Performance data is typical with fluid at 21,8 cST (105 SUS) and 49°C (120°F)	
Typical application pressure (all ports)	210 bar (3000 psi)
Maximum regulated flow	Up to 114 L/min (30 USgpm)
Temperature range	-40° to 120°C (-40° to 248°F)
Fluids	All general purpose hydraulic fluids such as: MIL-H-5606, SAE 10, SAE 20, etc.

Description

Full range adjustable restrictive pressure compensated flow control package with free reverse flow.

Performance characteristics

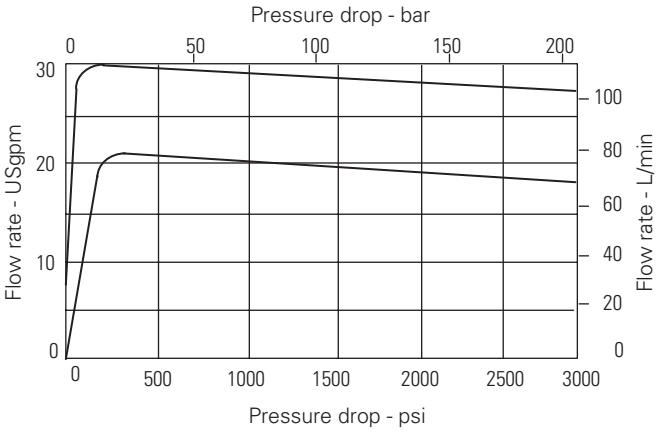

K

Where measurements are critical request certified drawings. We reserve the right to change specifications without notice.

FRC-3 - Flow control

Pressure compensated, restrictive type, full range adjustable with reverse flow check
Up to 114 L/min (30 USgpm) • 210 bar (3000 psi)

Model code

FRC	–	3	(V)	–	A	**	–	**	–	00
1		2	3		4	5		6		7

1 Function

FRC - Fully adjustable pressure compensated flow control with reverse flow check

2 Maximum rated flow

3 - 115 L/min (30 USgpm)

3 Seal material

Blank - Buna-N
V - Viton®

Viton is a registered trademark of E.I. DuPont

4 Valve housing material

A - Aluminum

5 Port size

Code	Port size	Housing number
8G	1" BSPP	02-178291
16T	SAE 16	02-178292

6 Adjustment type

	Flow rate
K1 - Knob*	76 L/min (20 USgpm)
K2 - Knob	114 L/min (30 USgpm)
S1 - Screw	114 L/min (30 USgpm)
H1 - Handwheel	114 L/min (30 USgpm)

*180° rotation

7 Special features

00 - None

(Only required if valve has special features, omitted if "00".)

Composition chart

Adjustment	Cartridge	Description	Maximum flow
K1 - Knob	MRV2-16-K-0-20	Flow restrictor, adjustable, semi-rotary spool	76 L/min (20 USgpm)
K2 - Knob	MRV2-16-K-0-30	Flow restrictor, adjustable, semi-rotary spool	114 L/min (30 USgpm)
S1 - Screw	FCV6-16-S-0-NV	Flow restrictor, adjustable, needle type	114 L/min (30 USgpm)
H1 - Hand Knob	FCV6-16-K-0-NV	Flow restrictor, adjustable, needle type	114 L/min (30 USgpm)
–	CV1-16-P-0-5	Check valve	151 L/min (40 USgpm)
–	PCS3-16-0-80	Pressure compensator, spool type	114 L/min (30 USgpm)

Dimensions

mm (inch)

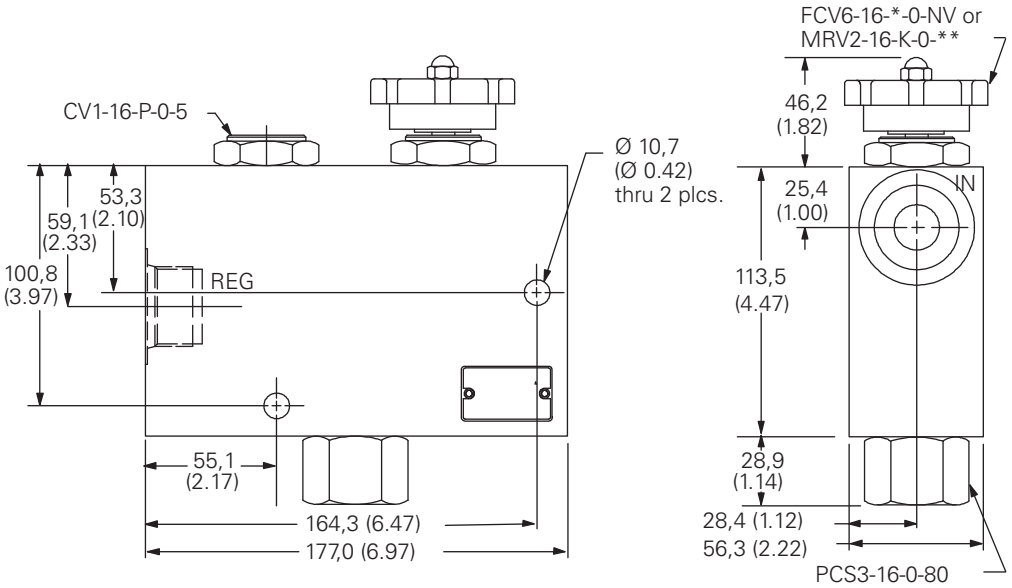

Where measurements are critical request certified drawings. We reserve the right to change specifications without notice.

FRC-4 - Flow control

Pressure compensated, restrictive type, full range adjustable with reverse flow check
Up to 190 L/min (50 USgpm) • 210 bar (3000 psi)

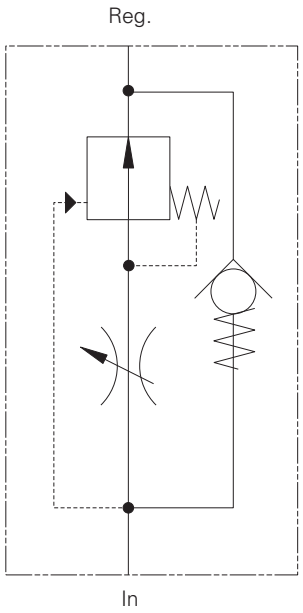

Operation

This standard valve package is used in a hydraulic circuit where flow rates must be constantly maintained, regardless of changes in upstream or downstream pressure.

Also where a full range of flow adjustments is required. It also provides free reverse flow.

Features

Pressure compensation, full flow range adjustment, aluminum in-line type housing, Screw and knob adjustment options. All components in the package are true cartridges and can be removed from the housing without disturbing the plumbing.

Performance data

Ratings and specifications

Performance data is typical with fluid at 21,8 cST (105 SUS) and 49°C (120°F)	
Typical application pressure (all ports)	210 bar (3000 psi)
Maximum regulated flow	Up to 190 L/min (50 USgpm)
Temperature range	-40° to 120°C (-40° to 248°F)
Fluids	All general purpose hydraulic fluids such as: MIL-H-5606, SAE 10, SAE 20, etc.

Description

Full range adjustable restrictive pressure compensated flow control package with free reverse flow.

Performance characteristics

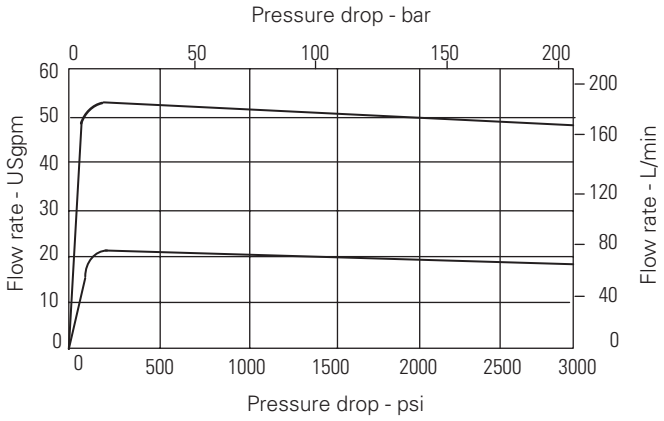

K

Where measurements are critical request certified drawings. We reserve the right to change specifications without notice.

FRC-4 - Flow control

Pressure compensated, restrictive type, full range adjustable with reverse flow check
Up to 190 L/min (50 USgpm) • 210 bar (3000 psi)

Model code

FRC	–	4	(V)	–	A	**	–	**	–	00
1		2	3		4	5		6		7

1 Function

FRC - Fully adjustable pressure compensated flow control with reverse flow check

2 Maximum rated flow

4 - 190 L/min (50 USgpm)

3 Seal material

Blank - Buna-N
V - Viton®

Viton is a registered trademark of E.I. DuPont

4 Valve housing material

A - Aluminum

5 Port size

Code	Port size	Housing number
12G	1 1/4" BSPP	02-178293
20T	SAE 20	02-178294

6 Adjustment type

	Flow rate
K1 - Knob*	190 L/min (50 USgpm)

*180° rotation

7 Special features

00 - None
(Only required if valve has special features, omitted if "00".)

Composition chart

Adjustment	Cartridge	Description	Maximum flow
K1 - Knob	NV1-20-K-0	Needle valve	190 L/min (50 USgpm)
–	CV2-20-P-0-5	Check valve	220 L/min (60 USgpm)
–	PCS3-20-0-80	Pressure compensator, spool type	200 L/min (53 USgpm)

Dimensions

mm (inch)

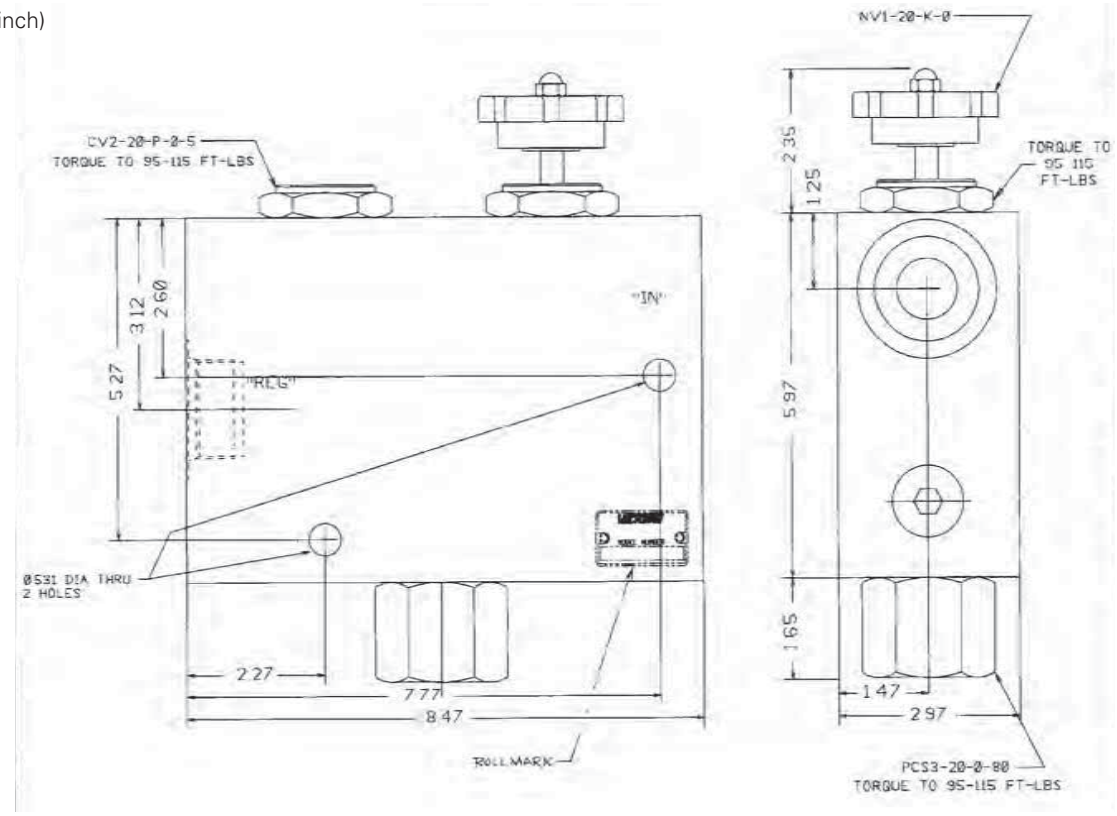

Where measurements are critical request certified drawings. We reserve the right to change specifications without notice.

PCC1-12 - Pump control

Single pump circuits
Up to 114 L/min (30 USgpm) • 5-210 bar (75-3000 psi)

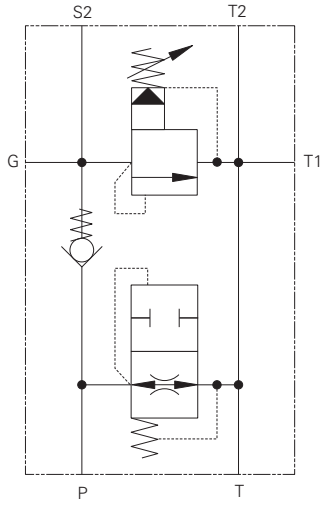

Operation

This standard valve package is used for air-bleed and start-up in single pump power units. It also provides main system relief protection.

Features

Multiple tank ports for mounting convenience, direct reservoir mounting capability by using T port. Both T port and mounting holes have O-ring seals mounting surface.

Aluminum in-line type housing, Tamper proof and adjustable relief options, gauge port. All components in the package are true cartridges and can be removed from the housing without disturbing the plumbing.

Performance data

Ratings and specifications

Performance data is typical with fluid at 21,8 cST (105 SUS) and 49°C (120°F)	
Typical application pressure range (all ports)	5-210 bar (75-3000 psi)
Maximum regulated flow	Up to 114 L/min (30 USgpm)
Temperature range	-40° to 120°C (-40° to 248°F)
Reseat pressure	90% of crack pressure
Fluids	All general purpose hydraulic fluids such as: MIL-H-5606, SAE 10, SAE 20, etc.

Description

Pump control manifold for single pump circuits.

Pressure drop

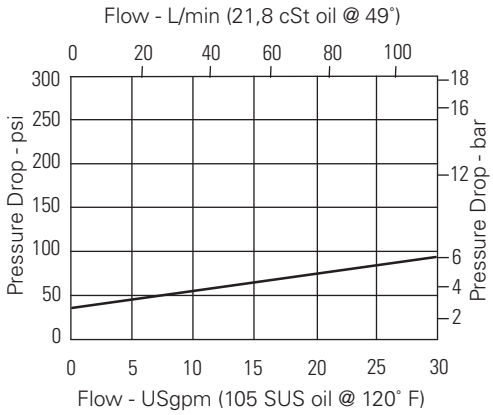

Pressure override

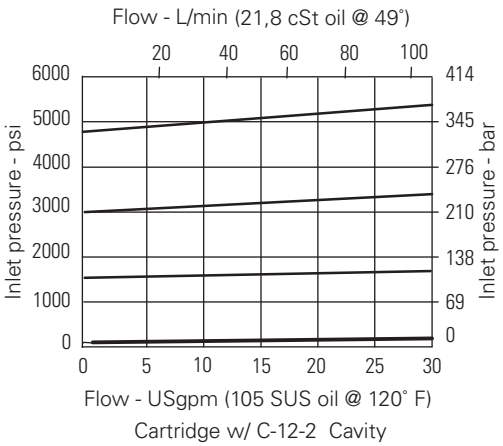

Where measurements are critical request certified drawings. We reserve the right to change specifications without notice.

PCC1-12 - Pump control

Single pump circuits
Up to 114 L/min (30 USgpm) • 5-210 bar (75-3000 psi)

Model code

PCC1 – 12 (V) – * – A ** – ** / ** – 00

1 2 3 4 5 6 7 8 9

1 Function
PCC1 - Pump control for single pump circuits

2 Size
12 - 12 size

3 Seal material
Blank - Buna-N
V - Viton®

Viton is a registered trademark of E.I. DuPont

4 Relief control
C - Cap
K - Knob
S - Screw

5 Valve housing material
A - Aluminum

6 Port size

Code	P, SYS, T2	T1	Gauge
6G	3/4" BSPP	1/2" BSPP	1/4" BSPP
12T	SAE 12	SAE 8	SAE 4

7 Pressure range
Note: Code based on pressure in psi.

15 - 5-100 bar (75-1500 psi)
30 - 10-210 bar (150-3000 psi)

8 Pressure setting -
user requested in 50 psi steps. Example:

10 - 1000 psi
10.5 - 1050 psi

9 Special features
00 - None

(Only required if valve has special features, omitted if "00".)

Composition chart

Cartridge	Description	Maximum flow	Quantity
VF1-10-F-0-.25	Velocity fuse	23 L/min (6 USgpm)	1
CV11-12-P-0-20	Check valve	113 L/min (30 USgpm)	1
RV11-12-*-0-**	Relief valve	113 L/min (30 USgpm)	1

Dimensions
mm (inch)

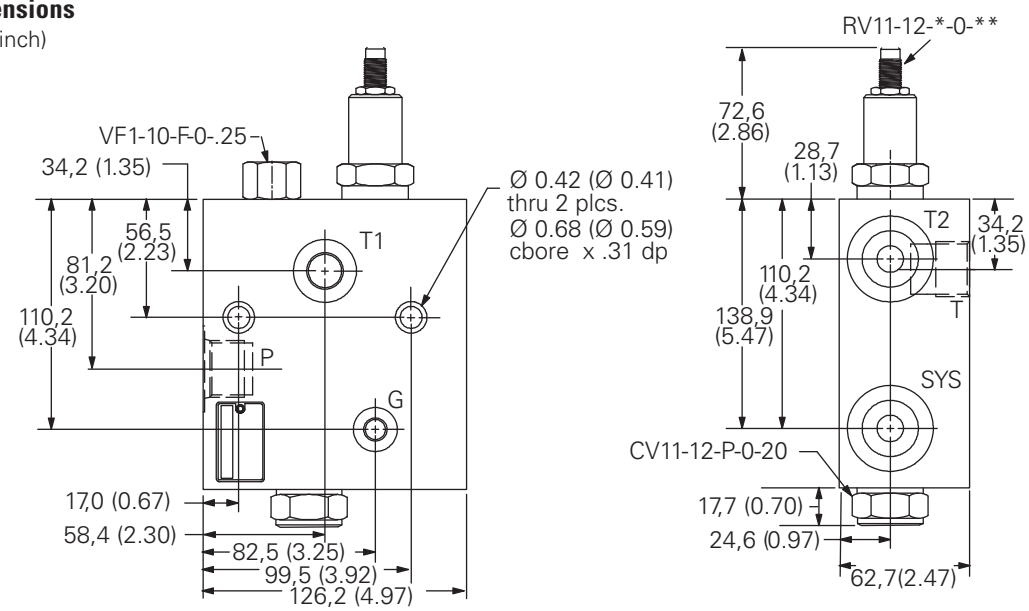

Where measurements are critical request certified drawings. We reserve the right to change specifications without notice.

PCC1-16 - Pump control

Single pump circuits
Up to 228 L/min (60 USgpm) • 10-210 bar (150-3000 psi)

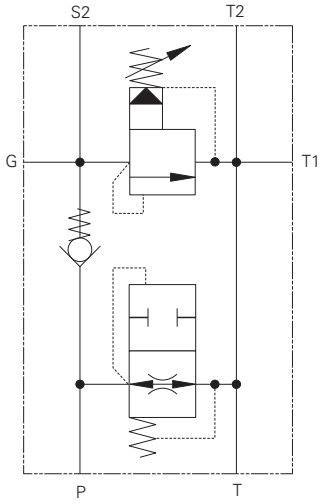

Operation

This standard valve package is used for air-bleed and start-up in single pump power units. It also provides main system relief protection.

Features

Multiple tank ports for mounting convenience, direct reservoir mounting capability by using T port. Both T port and mounting holes have O-ring seals mounting surface.

Aluminum in-line type housing, Tamper proof and adjustable relief options, gauge port. All components in the package are true cartridges and can be removed from the housing without disturbing the plumbing.

Performance data

Ratings and specifications

Performance data is typical with fluid at 21,8 cST (105 SUS) and 49°C (120°F)	
Typical application pressure range (all ports)	10-210 bar (150-3000 psi)
Maximum regulated flow	Up to 228 L/min (60 USgpm)
Temperature range	-40° to 120°C (-40° to 248°F)
Reseat pressure	90% of crack pressure
Fluids	All general purpose hydraulic fluids such as: MIL-H-5606, SAE 10, SAE 20, etc.

Description

Pump control manifold for single pump circuits.

Pressure drop

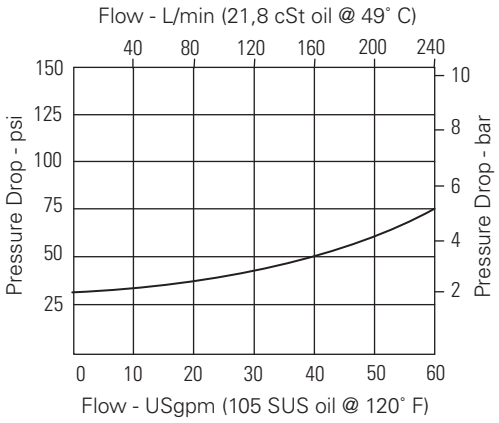

Pressure override

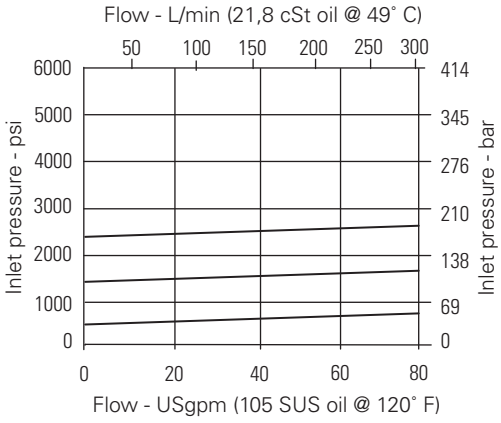

K

Where measurements are critical request certified drawings. We reserve the right to change specifications without notice.

PCC1-16 - Pump control

Single pump circuits
Up to 228 L/min (60 USgpm) • 10-210 bar (150-3000 psi)

Model code

PCC1 – 16 (V) – * – A ** – ** / ** – 00

1 2 3 4 5 6 7 8 9

1 Function

PCC1 - Pump control for single pump circuits

2 Size

16 - 16 size

3 Seal material

Blank - Buna-N
V - Viton®

Viton is a registered trademark of E.I. DuPont

4 Relief control

C - Cap
K - Knob
S - Screw

5 Valve housing material

A - Aluminum

6 Port size

Code	P, SYS, T2	T1	Gauge
8G	1" BSPP	3/4" BSPP	1/4" BSPP
16T	SAE 16	SAE 8	SAE 4

7 Pressure range

Note: Code based on pressure in psi.

30 - 10-210 bar (150-3000 psi)

8 Pressure setting -

user requested in 50 psi steps.
Example:
10 - 1000 psi
10.5 - 1050 psi

9 Special features

00 - None

(Only required if valve has special features, omitted if "00".)

Composition chart

Cartridge	Description	Maximum flow	Quantity
VF1-10-F-0-.25	Velocity fuse	23 L/min (6 USgpm)	1
CV2-20-P-0-30	Check valve	228 L/min (60 USgpm)	1
RV5-16-*-0-30	Relief valve	303 L/min (80 USgpm)	1

Dimensions

mm (inch)

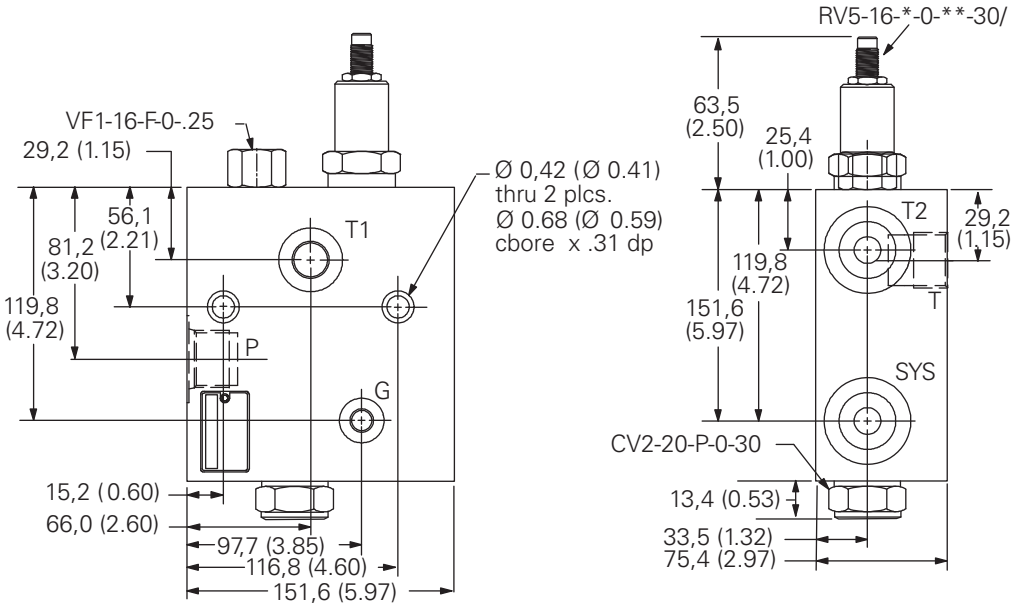

Where measurements are critical request certified drawings. We reserve the right to change specifications without notice.

PCC2-12 - Pump control

Multiple pump circuits
Up to 114 L/min (30 USgpm) • 5-210 bar (75-3000 psi)

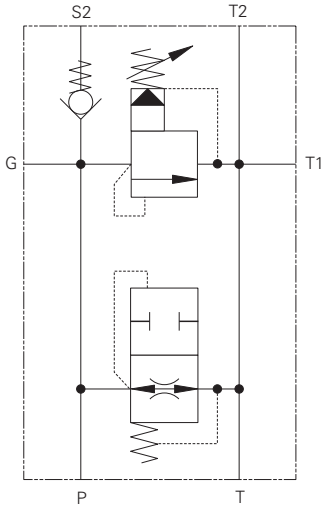

Operation

This standard valve package is used to provide air-bleed, start-up and relief protection for each pump in multiple pump circuits. The check valve position in the circuit isolates the other pumps from the valve assembly.

Features

Individual relief pressure setting for each pump in the system, multiple tank ports for mounting convenience, direct reservoir mounting capability by using T port. Both T port and mounting holes have O-ring seals mounting surface.

Aluminum in-line type housing, tamper proof and adjustable relief options, gauge port. All components in the package are true cartridges and can be removed from the housing without disturbing the plumbing.

Performance data

Ratings and specifications

Performance data is typical with fluid at 21,8 cST (105 SUS) and 49°C (120°F)	
Typical application pressure range (all ports)	5 - 210 bar (75 - 3000 psi)
Maximum regulated flow	Up to 114 L/min (30 USgpm)
Temperature range	-40° to 120°C (-40° to 248°F)
Reseat pressure	90% of crack pressure
Fluids	All general purpose hydraulic fluids such as: MIL-H-5606, SAE 10, SAE 20, etc.

Description

Pump control manifold for multiple pump circuits.

Pressure drop

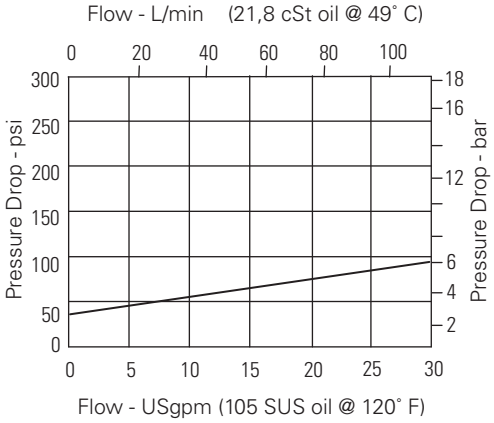

Pressure override

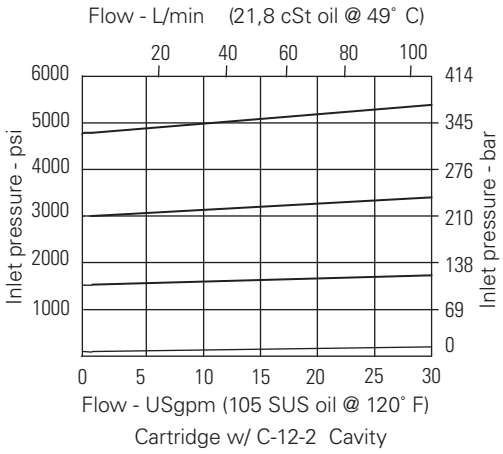

K

Where measurements are critical request certified drawings. We reserve the right to change specifications without notice.

PCC2-12 - Pump control

Multiple pump circuits
Up to 114 L/min (30 USgpm) • 5-210 bar (75-3000 psi)

Model code

PCC2	–	12	(V)	–	*	–	A	**	–	**	/	**	–	00
1		2	3		4		5	6		7		8		9

1 Function

PCC2 - Pump control for single pump circuits

2 Size

12 - 12 size

3 Seal material

Blank - Buna-N
V - Viton®

Viton is a registered trademark of E.I. DuPont

4 Relief control

C - Cap
K - Knob
S - Screw

5 Valve housing material

A - Aluminum

6 Port size

Code	P, SYS, T2	T1	Gauge
6G	3/4" BSPP	1/2" BSPP	1/4" BSPP
12T	SAE 12	SAE 8	SAE 4

7 Pressure range

Note: Code based on pressure in psi.

15 - 5-100 bar (75-1500 psi)
30 - 10-210 bar (150-3000 psi)

8 Pressure setting -

user requested in 50 psi steps. Example:

10 - 1000 psi
10.5 - 1050 psi

9 Special features

00 - None

(Only required if valve has special features, omitted if "00".)

Composition chart

Cartridge	Description	Maximum flow	Quantity
VF1-10-F-0-.25	Velocity fuse	23 L/min (6 USgpm)	1
CV11-12-P-0-20	Check valve	113 L/min (30 USgpm)	1
RV11-12-*-0-**/	Relief valve	113 L/min (30 USgpm)	1

Dimensions

mm (inch)

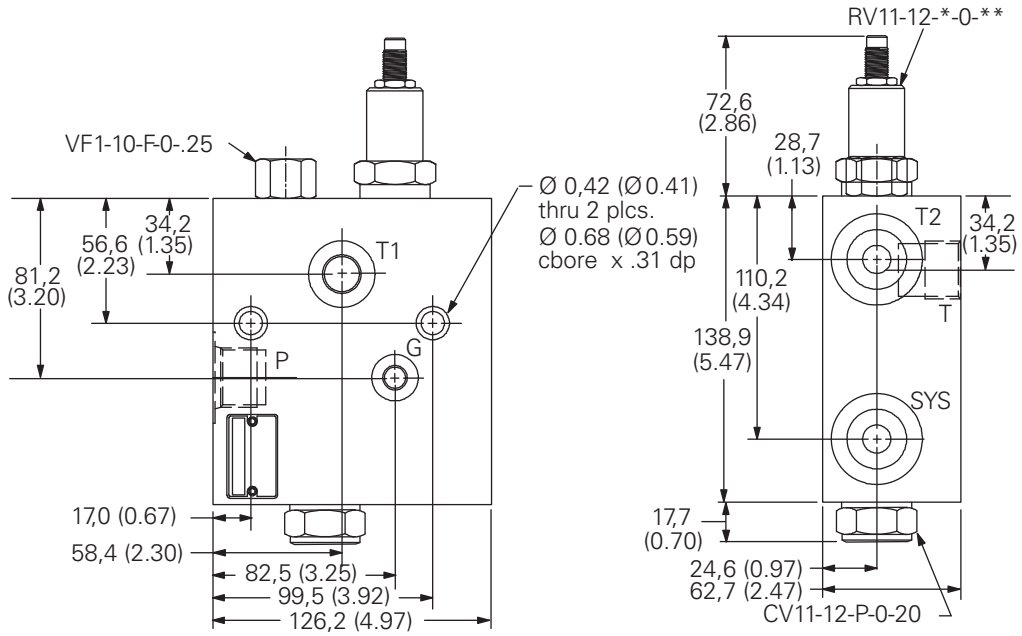

Where measurements are critical request certified drawings. We reserve the right to change specifications without notice.

PCC2-16 - Pump control

Multiple pump circuits
Up to 228 L/min (60 USgpm) • 10-210 bar (150-3000 psi)

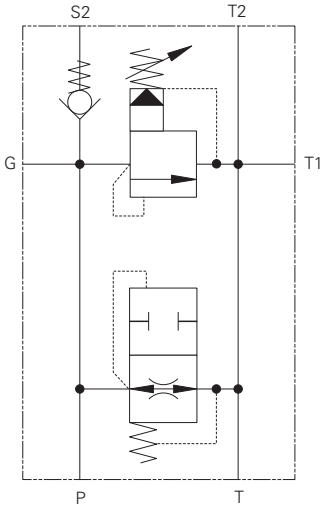

Operation

This standard valve package is used to provide air-bleed, start-up and relief protection for each pump in multiple pump circuits. The check valve position in the circuit isolates the other pumps from the valve assembly.

Features

Individual relief pressure setting for each pump in the system, multiple tank ports for mounting convenience, direct reservoir mounting capability by using T port. Both T port and mounting holes have O-ring seals mounting surface.

Aluminum in-line type housing, tamper proof and adjustable relief options, gauge port. All components in the package are true cartridges and can be removed from the housing without disturbing the plumbing.

Performance data

Ratings and specifications

Performance data is typical with fluid at 21,8 cST (105 SUS) and 49°C (120°F)	
Typical application pressure range (all ports)	10-210 bar (150-3000 psi)
Maximum regulated flow	Up to 228 L/min (60 USgpm)
Temperature range	-40° to 120°C (-40° to 248°F)
Reseat pressure	90% of crack pressure
Fluids	All general purpose hydraulic fluids such as: MIL-H-5606, SAE 10, SAE 20, etc.

Description

Pump control manifold for multiple pump circuits.

Pressure drop

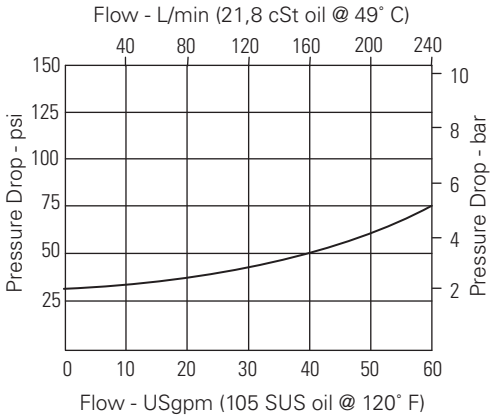

Pressure override

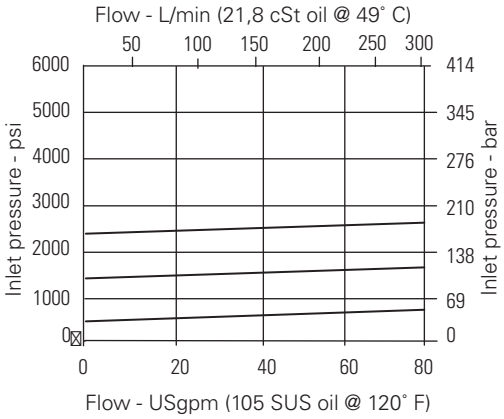

K

Where measurements are critical request certified drawings. We reserve the right to change specifications without notice.

PCC2-16 - Pump control

Multiple pump circuits
Up to 228 L/min (60 USgpm) • 10-210 bar (150-3000 psi)

Model code

PCC2	16	(V)	*	A	**	**	/	**	00
1	2	3	4	5	6	7		8	9

1 Function
PCC2 - Pump control for single pump circuits

2 Size
16 - 16 size

3 Seal material
Blank - Buna-N
V - Viton®
Viton is a registered trademark of E.I. DuPont

4 Relief control
C - Cap
K - Knob
S - Screw

5 Valve housing material
A - Aluminum

6 Port size

Code	P, SYS, T2	T1	Gauge
8G	1" BSPP	3/4" BSPP	1/4" BSPP
16T	SAE 16	SAE 12	SAE 4

7 Pressure range
Note: Code based on pressure in psi.
30 - 10-210 bar (150-3000 psi)

8 Pressure setting -
user requested in 50 psi steps. Example:
10 - 1000 psi
10.5 - 1050 psi

9 Special features
00 - None
(Only required if valve has special features, omitted if "00".)

Composition chart

Cartridge	Description	Maximum flow	Quantity
VF1-10-F-0-.25	Velocity fuse	23 L/min (6 USgpm)	1
CV2-20-P-0-30	Check valve	228 L/min (60 USgpm)	1
RV5-16-*-0-30/	Relief valve	303 L/min (80 USgpm)	1

Dimensions

mm (inch)

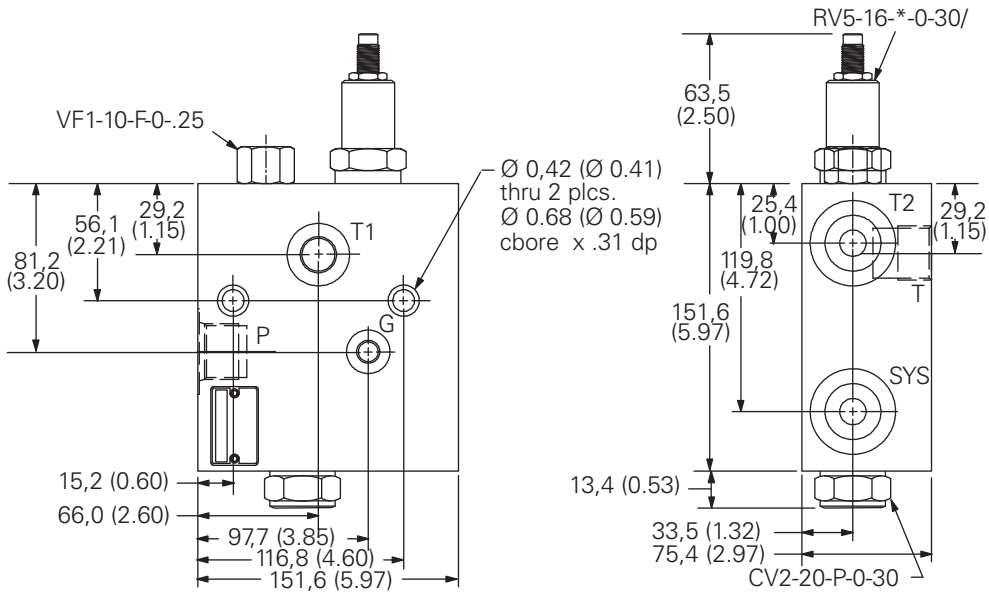

Where measurements are critical request certified drawings. We reserve the right to change specifications without notice.

PFRR-8 - Flow control

Pressure compensated, priority type, with relief on priority flow
15 L/min (4 USgpm) • 7-210 bar (100-3000 psi)

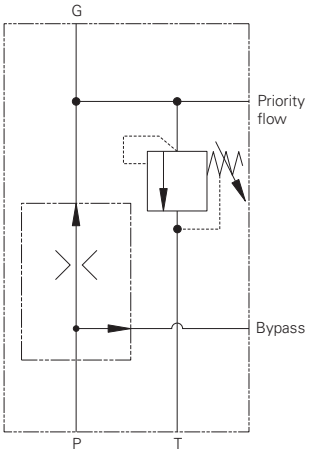

Operation

This standard valve package is used to maintain constant flow to priority circuits when input flow is greater than required, regardless of changes in upstream or downstream pressure. It will bypass the rest of the flow to an auxiliary circuit or to tank.

Relief valve on a priority port limits pressure on a priority port, as well as ensures bypass flow when there is no demand on priority circuit.

Features

Priority flow pressure compensation, all ports except T can be pressurized to 210 bar (3000 psi). Aluminum in-line type housing, tamper proof and adjustable relief options, gauge port. All components in the package are true cartridges and can be removed from the housing without disturbing the plumbing.

Performance data

Ratings and specifications

Performance data is typical with fluid at 21,8 cST (105 SUS) and 49°C (120°F)	
Typical application pressure range	7-210 bar (100-3000 psi)
Maximum inlet flow	15 L/min (4 USgpm)
Regulated flow range	0.4-8 L/min (0.1-2.5 USgpm)
Internal leakage	82 cm^3/min (5 in^3/min) max @ 210 bar (3000 psi)
Temperature range	-40° to 120°C (-40° to 248°F)
Reseat pressure	90% of crack pressure
Fluids	All general purpose hydraulic fluids such as: MIL-H-5606, SAE 10, SAE 20, etc.

Description

Fixed priority flow control with relief on priority flow port.

Typical flow regulation

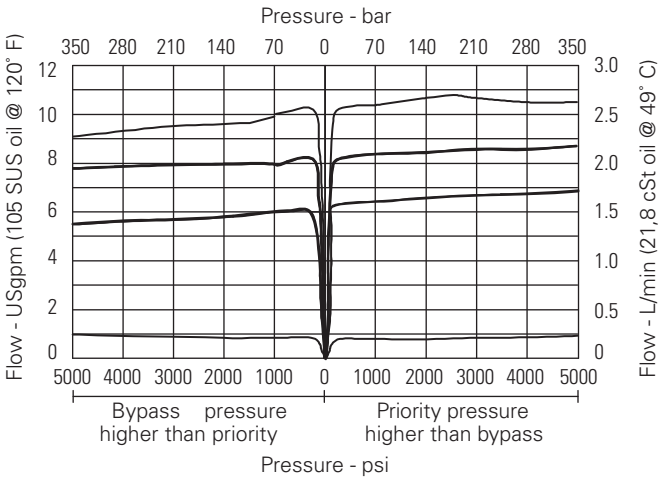

K

Where measurements are critical request certified drawings. We reserve the right to change specifications without notice.

PFRR-8 - Flow control

Pressure compensated, priority type, with relief on priority flow
15 L/min (4 USgpm) • 7-210 bar (100-3000 psi)

Model code

PFRR	–	8	(V)	–	*	–	A	**	–	**	/	**	–	**	–	00
1		2	3		4		5	6		7		8		9		10

1 Function

PFRR - Pressure compensated priority flow control with relief on priority port

2 Size

8 - 8 size

3 Seal material

Blank - Buna-N
V - Viton®

Viton is a registered trademark of E.I. DuPont

4 Relief control

C - Cap
K - Knob
S - Screw

5 Valve housing material

A - Aluminum

6 Port size

Code	P, Bypass	Priority, T	Gauge	Housing number
3G	3/8" BSPP	3/8" BSPP	1/4" BSPP	02-178273
8T	SAE 8	SAE 8	SAE 4	02-178274

7 Pressure range

Note: Code based on pressure in psi.

3 - 3-20 bar (50-300 psi)
20 - 40-140 bar (600-2000 psi)
36 - 20-250 bar (300-3600 psi)

8 Pressure setting -

user requested in 50 psi steps.
Example:
10 - 1000 psi
10.5 - 1050 psi

9 Flow setting

Customer must specify flow:
0.4 - 8L/min (0.1 - 2.5 USgpm)

10 Special features

00 - None

(Only required if valve has special features, omitted if "00".)

Composition chart

Cartridge	Description	Quantity
PFR5-8-F-0-**	Priority flow regulator	1
RV1-8-*-0-**	Relief valve	1

Dimensions

mm (inch)

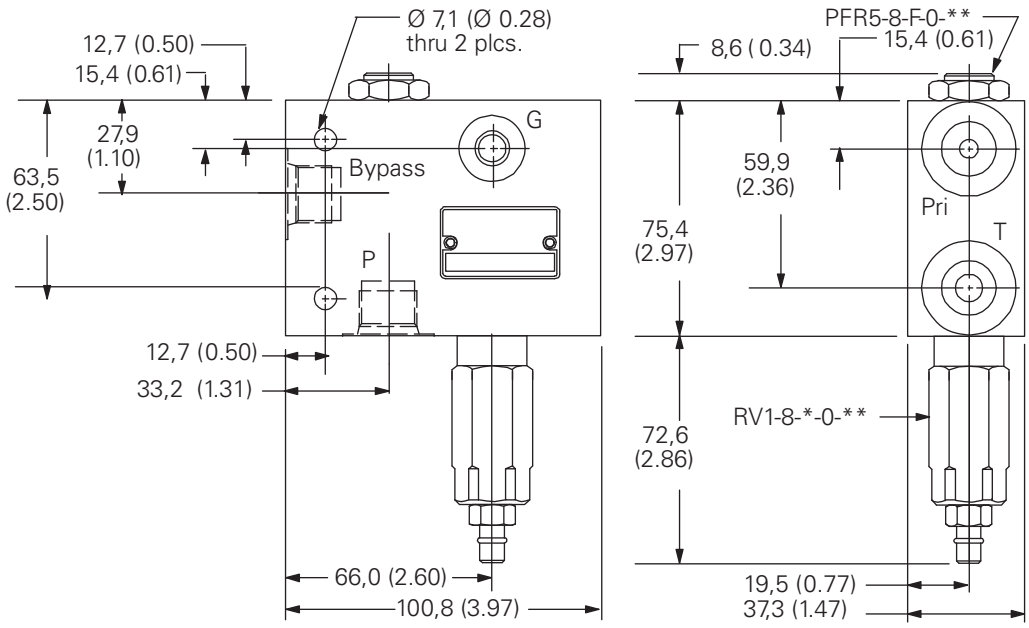

Where measurements are critical request certified drawings. We reserve the right to change specifications without notice.

PFRR-10 - Flow control

Pressure compensated, priority type, with relief on priority flow
Up to 57 L/min (15 USgpm) • 7-210 bar (100-3000 psi)

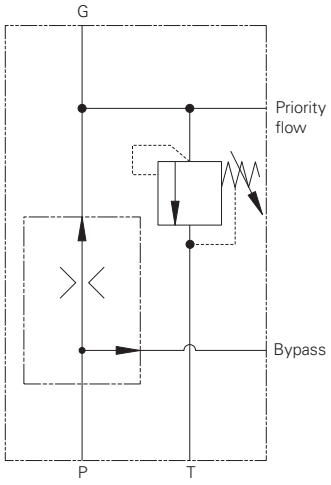

Operation

This standard valve package is used to maintain constant flow to priority circuits when input flow is greater than required, regardless of changes in upstream or downstream pressure. It will bypass the rest of the flow to an auxiliary circuit or to tank.

Relief valve on a priority port limits pressure on a priority port, as well as ensures bypass flow when there is no demand on priority circuit.

Features

Priority flow pressure compensation, all ports except T can be pressurized to 210 bar (3000 psi). Aluminum in-line type housing, tamper proof and adjustable relief options, gauge port. All components in the package are true cartridges and can be removed from the housing without disturbing the plumbing.

Performance data

Ratings and specifications

Performance data is typical with fluid at 21,8 cST (105 SUS) and 49°C (120°F)	
Typical application pressure range	7-210 bar (100-3000 psi)
Maximum inlet flow	57 L/min (15 USgpm)
Regulated flow range	0.38-22.7 L/min (0.1-6 USgpm)
Internal leakage	82 cm^3/min (5 in^3/min) max @ 210 bar (3000 psi)
Temperature range	-40° to 120°C (-40° to 248°F)
Reseat pressure	90% of crack pressure
Fluids	All general purpose hydraulic fluids such as: MIL-H-5606, SAE 10, SAE 20, etc.

Description

Fixed priority flow control with relief on priority flow port.

Typical flow regulation

A - Port 3, priority (regulated) outlet pressurized
B - Port 2, bypass outlet pressurized

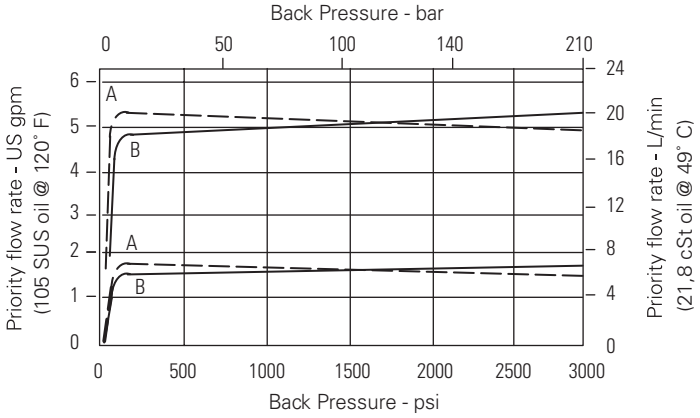

K

Where measurements are critical request certified drawings. We reserve the right to change specifications without notice.

PFRR-10 - Flow control

Pressure compensated, priority type, with relief on priority flow
Up to 57 L/min (15 USgpm) • 7-210 bar (100-3000 psi)

Model code

PFRR	–	10	(V)	–	*	–	A	**	–	**	/	**	–	**	–	00
1		2	3		4		5	6		7		8		9		10

1 Function
PFRR - Pressure compensated priority flow control with relief on priority port

2 Size
10 - 10 size

3 Seal material
Blank - Buna-N
V - Viton®

Viton is a registered trademark of E.I. DuPont

4 Relief control
C - Cap
K - Knob
S - Screw

5 Valve housing material
A - Aluminum

7 Pressure range
Note: Code based on pressure in psi.

3 - 3-20 bar (50-300 psi)
20 - 7-140 bar (100-2000 psi)
35 - 17-240 bar (250-3500 psi)

8 Pressure setting -
user requested in 50 psi steps. Example:

10 - 1000 psi
10.5 - 1050 psi

9 Flow setting
Customer must specify flow: 0.38 - 22.7L/min (0.1 - 6 USgpm)

10 Special features
00 - None

(Only required if valve has special features, omitted if "00".)

6 Port size

Code	P, Bypass	Priority, T	Gauge	Housing number
4G	3/8" BSPP	1/2" BSPP	1/4" BSPP	02-178275
10T	SAE 8	SAE 8	SAE 4	02-178276

Composition chart

Cartridge	Description	Quantity
PFR1-10-F-0-**	Priority flow regulator	1
RV5-10-*-0-35/	Relief valve	1

Dimensions
mm (inch)

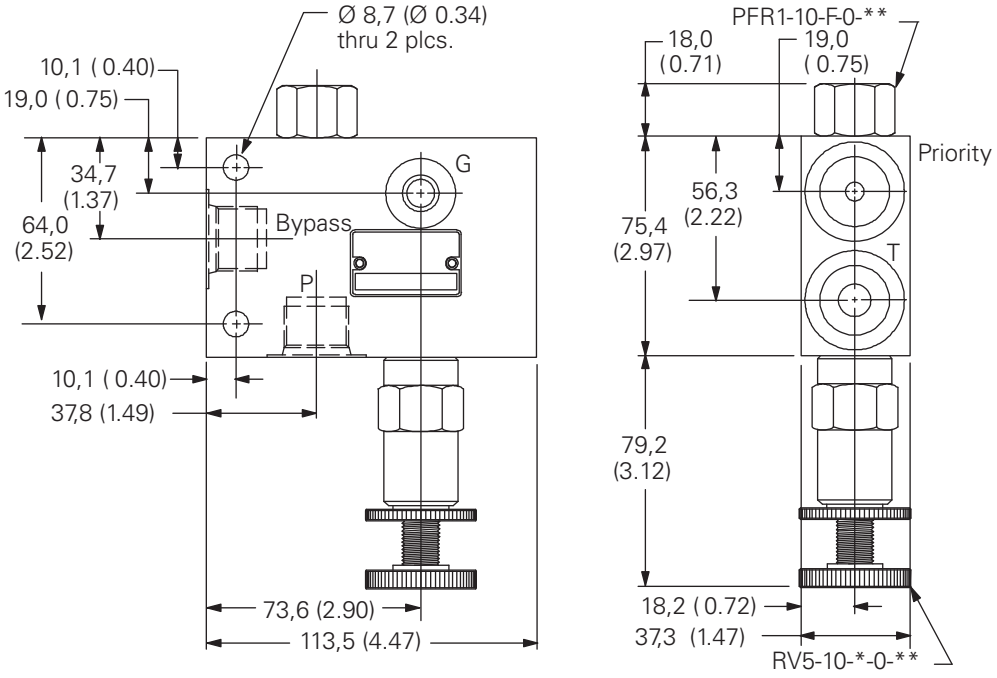

Where measurements are critical request certified drawings. We reserve the right to change specifications without notice.

PFRR-16 - Flow control

Pressure compensated, priority type, with relief on priority flow
152 L/min (40 USgpm) • 7-210 bar (100-3000 psi)

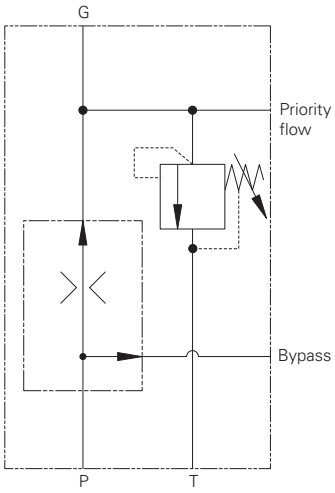

Operation

This standard valve package is used to maintain constant flow to priority circuits when input flow is greater than required, regardless of changes in upstream or downstream pressure. It will bypass the rest of the flow to an auxiliary circuit or to tank.

Relief valve on a priority port limits pressure on a priority port, as well as ensures bypass flow when there is no demand on priority circuit.

Features

Priority flow pressure compensation, all ports except T can be pressurized to 210 bar (3000 psi). Aluminum in-line type housing, tamper proof and adjustable relief options, gauge port. All components in the package are true cartridges and can be removed from the housing without disturbing the plumbing.

Performance data

Ratings and specifications

Performance data is typical with fluid at 21,8 cST (105 SUS) and 49°C (120°F)	
Typical application pressure range	7-210 bar (100-3000 psi)
Maximum inlet flow	152 L/min (40 USgpm)
Regulated flow range	1.9-113 L/min (0.5-30 USgpm)
Internal leakage	82 cm^3/min (5 in^3/min) max @ 210 bar (3000 psi)
Temperature range	-40° to 120°C (-40° to 248°F)
Reseat pressure	90% of crack pressure
Fluids	All general purpose hydraulic fluids such as: MIL-H-5606, SAE 10, SAE 20, etc.

Description

Fixed priority flow control with relief on priority flow port.

Typical flow regulation

A - Port 3, priority (regulated) outlet pressurized
B - Port 2, bypass outlet pressurized

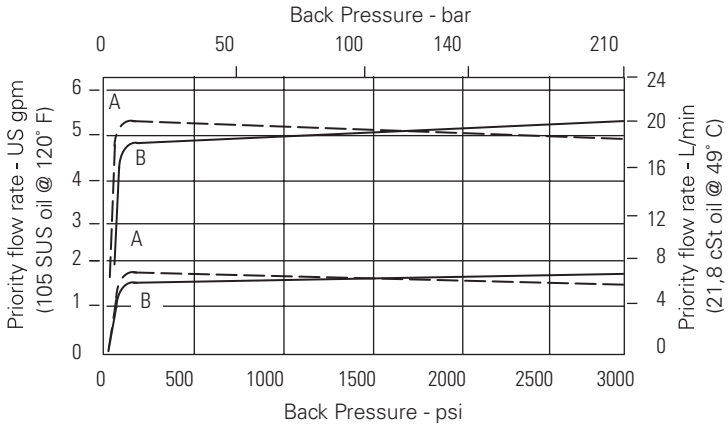

K

Where measurements are critical request certified drawings. We reserve the right to change specifications without notice.

PFRR-16 - Flow control

Pressure compensated, priority type, with relief on priority flow
152 L/min (40 USgpm) • 7-210 bar (100-3000 psi)

Model code

PFRR	–	16	(V)	–	*	–	A	**	–	**	/	**	–	**	–	00
1		2	3		4		5	6		7		8		9		10

1 Function

PFRR - Pressure compensated priority flow control with relief on priority port

2 Size

16 - 16 size

3 Seal material

Blank - Buna-N
V - Viton®

Viton is a registered trademark of E.I. DuPont

4 Relief control

C - Cap
K - Knob
S - Screw

5 Valve housing material

A - Aluminum

6 Port size

Code	P, Bypass	Priority, T	Gauge	Housing number
8G	1" BSPP	3/4" BSPP	1/4" BSPP	02-178277
16T	SAE 16	SAE 12	SAE 4	02-178278

7 Pressure range

Note: Code based on pressure in psi.

3 - 3-20 bar (50-300 psi)
20 - 7-140 bar (100-2000 psi)
35 - 17-240 bar (250-3500 psi)

8 Pressure setting -

user requested in 50 psi steps. Example:

10 - 1000 psi
10.5 - 1050 psi

9 Flow setting

Customer must specify flow: 0.38 - 22.7L/min (0.1 - 6 USgpm)

10 Special features

00 - None

(Only required if valve has special features, omitted if "00".)

Composition chart

Cartridge	Description	Quantity
PFR1-16-F-0-**	Priority flow regulator	1
RV5-10-*-0-**/**	Relief valve	1

Dimensions

mm (inch)

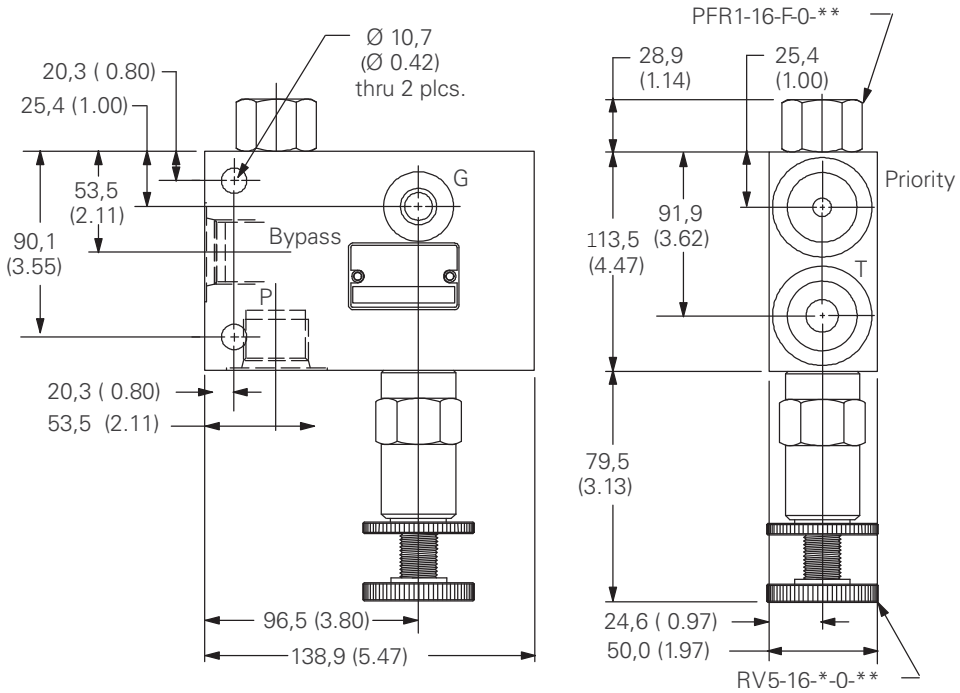

Where measurements are critical request certified drawings. We reserve the right to change specifications without notice.

SRV-8 - Unloading/relief valve

Normally open or normally closed
23 L/min (6 USgpm) • 210 bar (3000 psi)

Normally Closed Version

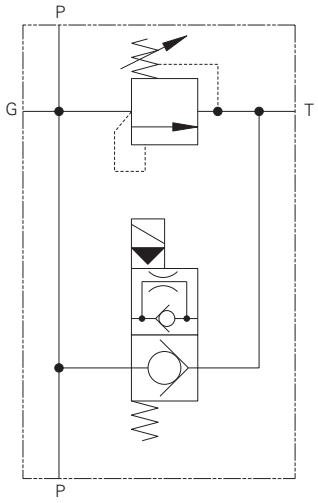

Normally Open Version

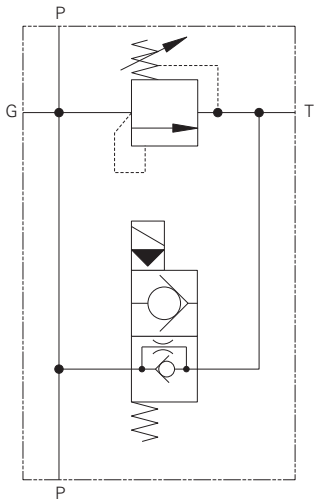

Operation

This standard valve package is designed for pump unloading via solenoid valve activation and pump relief, when the solenoid valve is not activated and system pressure reaches relief valve setting.

Features

Normally closed and normally open options, tamper proof or adjustable relief options. Low power requirements, gauge port. Aluminum in-line type housing, number of voltage and connector options.

All components in the package are true cartridges and can be removed from the housing without disturbing the plumbing.

Performance data

Ratings and specifications

Performance data is typical with fluid at 21,8 cST (105 SUS) and 49°C (120°F)	
Typical application pressure (all ports)	210 bar (3000 psi)
Flow rating	23 L/min (6 USgpm)
Internal leakage	5 drops/min @ 80% of crack pressure
Reseat pressure	80% of crack pressure
Typical vented ΔP	4 bar (60 psi) at rated flow
Coil specifications	Power requirements: 16 watts Coil duty: Continuous from 85% to 110% of nominal voltage (AC coils are internally rectified)
Temperature range	-40° to 120° C (-40° to 248° F)
Fluids	All general purpose hydraulic fluids such as: MIL-H-5606, SAE 10, SAE 20, etc.

Description

Solenoid actuated relief valve.

Pressure drop (unloading)

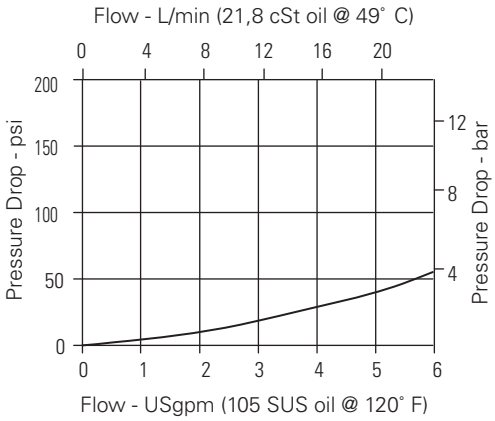

Pressure override

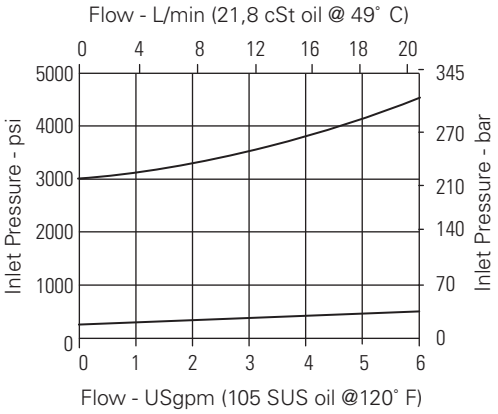

Where measurements are critical request certified drawings. We reserve the right to change specifications without notice.

SRV-8 - Unloading/relief valve

Normally open or normally closed
23 L/min (6 USgpm) • 210 bar (3000 psi)

Model code

SRV – 8 (V) – * – * – A ** – ** / *** – ** – 00

1 2 3 4 5 6 7 8 9 10 11

1 Function
SRV - Solenoid actuated relief valve

2 Size
8 - 8 size

3 Seal material
Blank - Buna-N
V - Viton®
Viton is a registered trademark of E.I. DuPont

4 Type
C - Normally closed
O - Normally open

5 Relief control
P - leakproof screw adjustment
R - Handknob adjustment
G - Tamperproof cap (See page E-7 for dimensions)

6 Valve housing material
A - Aluminum

7 Port size

Code	P, T	Gauge	Housing number
3G	3/8" BSPP	1/4" BSPP	02-178306
8T	SAE 8	SAE 4	02-178307

8 Relief Pressure range
Note: Code based on pressure in psi.
10 - 7-100 bar (100-1450 psi)
20 - 35 - 210 bar (500-3000 psi)

9 Voltage rating
12D - 12 VDC
24D - 24 VDC
120A - 120 VAC
240A - 240 VAC

10 Connector types
GS - ISO 4400 DIN 43650 connector
PS - 1/2" NPT conduit
WS - Lead wire

11 Special features
00 - None
(Only required if valve has special features, omitted if "00".)

Composition chart

Cartridge	Description	Quantity
SV5-8-0-0-**	2 way/2 position N.O. poppet solenoid valve	1
SV5-8-C-0-**	2 way/2 position N.C. poppet solenoid valve	1
1DR30-*-**-*	Relief valve, direct acting	1

Dimensions

mm (inch)

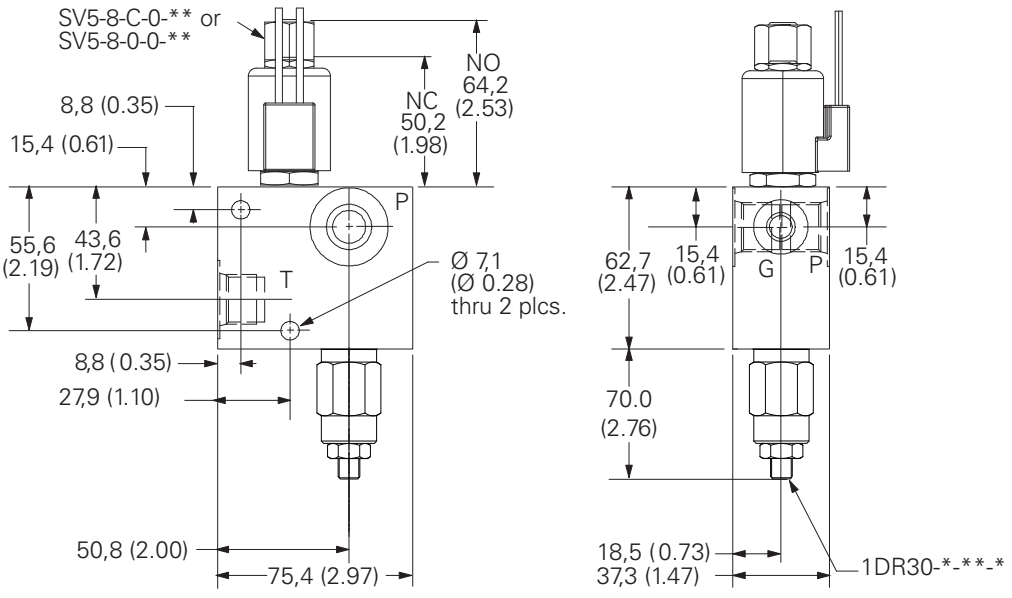

Where measurements are critical request certified drawings. We reserve the right to change specifications without notice.

SRV-10 - Unloading/relief valve

Normally open or normally closed
57 L/min (15 USgpm) • 210 bar (3000 psi)

Normally closed version

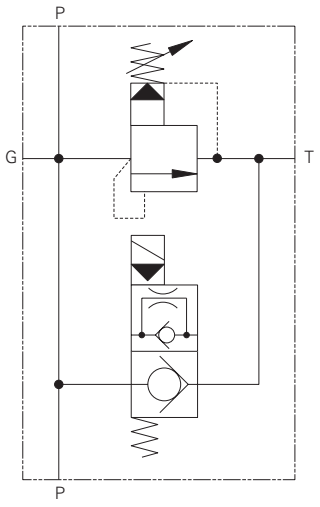

Normally open version

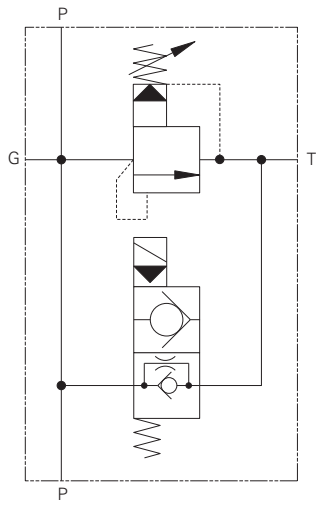

Operation

This standard valve package is designed for pump unloading via solenoid valve activation and pump relief, when the solenoid valve is not activated and system pressure reaches relief valve setting.

Features

Normally closed and normally open options, tamper proof or adjustable relief options. Low power requirements, gauge port. Aluminum in-line type housing, number of voltage and connector options.

All components in the package are true cartridges and can be removed from the housing without disturbing the plumbing.

Performance data

Ratings and specifications

Performance data is typical with fluid at 21,8 cST (105 SUS) and 49°C (120°F)	
Typical application pressure (all ports)	210 bar (3000 psi)
Flow rating	57 L/min (15 USgpm)
Internal leakage	80 cm³/min (5 in³/min) @ 210 bar (3000 psi)
Reseat pressure	80% of crack pressure
Typical vented ΔP	7 bar (100 psi) at rated flow
Coil specifications	Power requirements: 18 watts Coil duty: continuous from 85% to 110% of nominal voltage (AC coils are internally rectified)
Temperature range	-40° to 120° C (-40° to 248° F)
Fluids	All general purpose hydraulic fluids such as: MIL-H-5606, SAE 10, SAE 20, etc.

Description

Solenoid actuated relief valve.

Pressure drop (unloading)

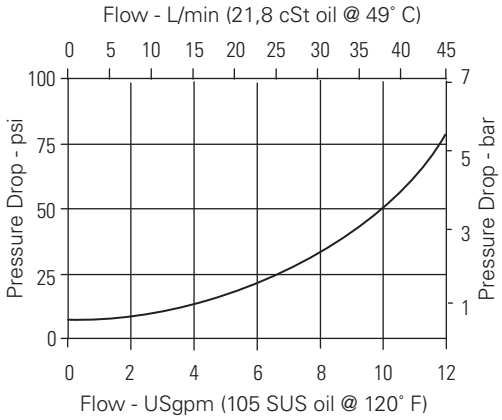

Pressure override

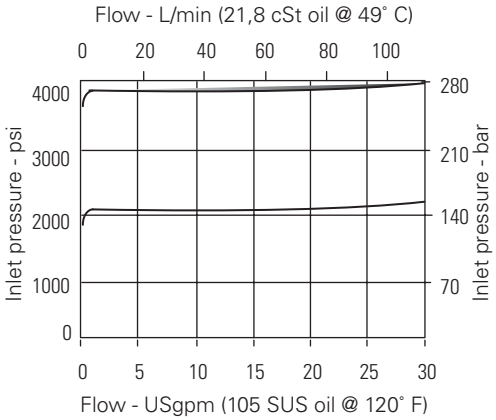

Where measurements are critical request certified drawings. We reserve the right to change specifications without notice.

SRV-10 - Unloading/relief valve

Normally open or normally closed
57 L/min (15 USgpm) • 210 bar (3000 psi)

Model code

SRV	_	10	(V)	_	*	_	*	_	A	**	_	**	/	***	_	**	_	00
1		2	3		4		5		6	7		8		9		10		11

1 Function
SRV - Solenoid actuated relief valve

2 Size
10 - 10 size

3 Seal material
Blank - Buna-N
V - Viton®

Viton is a registered trademark of E.I. DuPont

4 Type
C - Normally closed
O - Normally open

5 Relief control
C - Cap
K - Knob
S - Screw

6 Valve housing material
A - Aluminum

8 Relief Pressure range
Note: Code based on pressure in psi.

3 - 3-20 bar (50-300 psi)
35 -17-240 bar (250-300 psi)

9 Voltage rating
12D - 12 VDC
24D - 24 VDC
115A - 115 VAC
230A - 230 VAC

10 Connector types
G - ISO 4400 DIN 43650 connector
P - 1/2" NPT conduit
W - Leadwire

11 Special features
00 - None
(Only required if valve has special features, omitted if "00".)

7 Port size

Code	P, T	Gauge	Housing number
4G	1/2" BSPP	1/4" BSPP	02-178308
10T	SAE 10	SAE 4	02-178309

Composition chart

Cartridge	Description	Quantity
SV5-10-0-0-**	2 way/2 position N.O. poppet solenoid valve	1
SV1-10-C-0-**	2 way/2 position N.C. poppet solenoid valve	1
RV5-10-*-0-**	Relief valve, pilot operated	1

Dimensions
mm (inch)

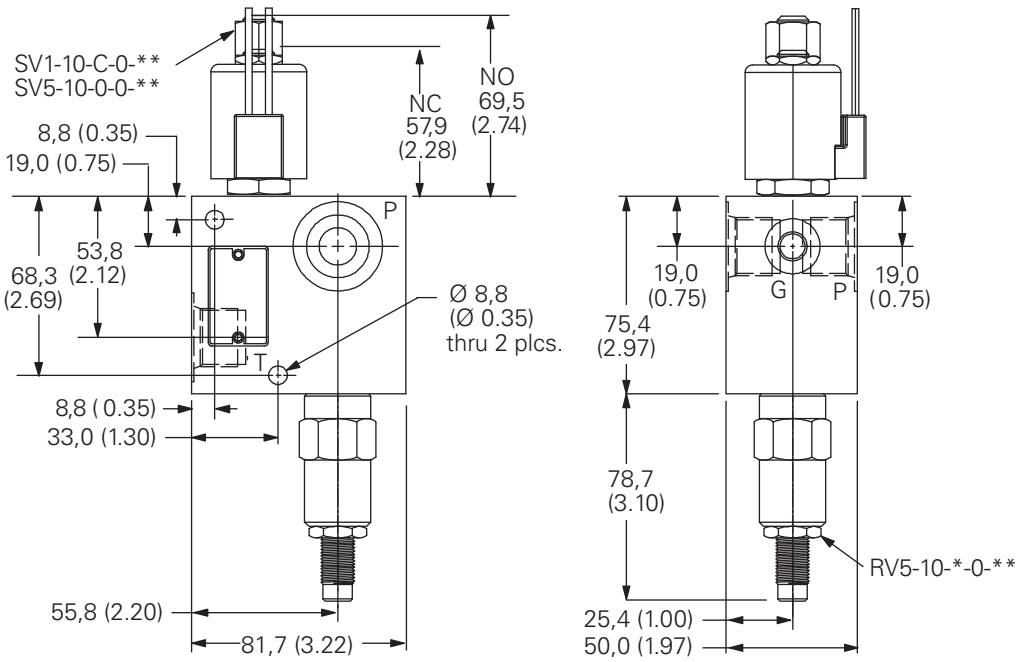

Where measurements are critical request certified drawings. We reserve the right to change specifications without notice.

SRV-12 - Solenoid vented relief valve

Normally open or normally closed
100 L/min (26 USgpm) • 210 bar (3000 psi)

Normally closed version

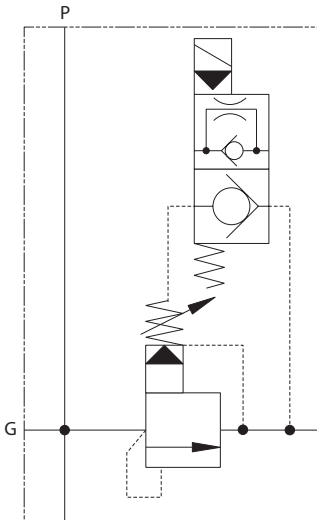

Normally open version

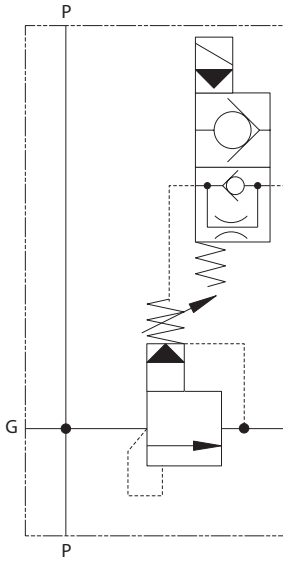

Description

Solenoid actuated vented relief valve.

Operation

This standard valve package is designed for pump unloading via solenoid valve activation to control remotely ventable relief valve and system relief, when the solenoid valve is not activated.

Features

Normally closed and normally open options, tamper proof or adjustable relief options. Low power requirements, gauge port. Aluminum in-line type housing, number of voltage and connector options.

All components in the package are true cartridges and can be removed from the housing without disturbing the plumbing.

Performance data

Ratings and specifications

Performance data is typical with fluid at 21,8 cST (105 SUS) and 49°C (120°F)	
Typical application pressure (all ports)	210 bar (3000 psi)
Flow rating	100 L/min (26 USgpm)
Internal leakage	35 milliliters/min @ 280 bar
Reseat pressure	Refer datasheet of 1VR100 in Section E
Typical vented ΔP	Refer datasheet of 1VR100 in Section E
Coil specifications	Power requirements: 16 watts Coil duty: Continuous from 85% to 110% of nominal voltage (AC coils are internally rectified)
Temperature range	-40° to 120° C (-40° to 248° F)
Fluids	All general purpose hydraulic fluids such as: MIL-H-5606, SAE 10, SAE 20, etc.

Pressure drop curves

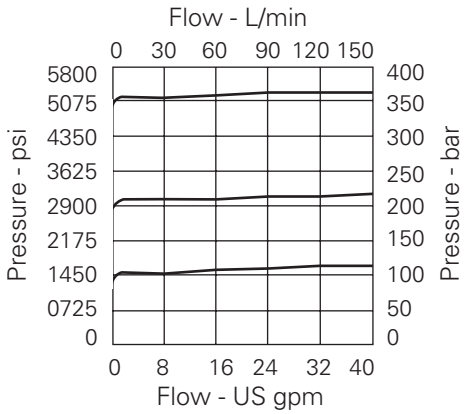

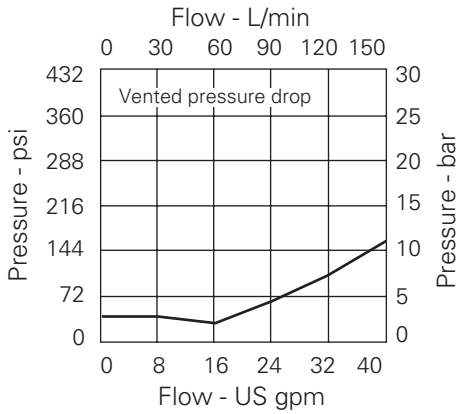

Where measurements are critical request certified drawings. We reserve the right to change specifications without notice.

SRV-12 - Solenoid vented relief valve

Normally open or normally closed
100 L/min (26 USgpm) • 210 bar (3000 psi)

Model code

SRV	_	12	(SV)_	*	_	*	_	A	**	_	**	/	***	_	**	_	00
1		2	3	4		5		6	7		8		9		10		11

1 Function
SRV - Solenoid actuated ventable relief valve

2 Size
12 - 12 size

3 Seal material
S- Nitrile (for use with most industrial hydraulic oils)
V - Viton® (for high temperatures and most special fluid applications)
Viton is a registered trademark of E.I. DuPont

4 Type
C - Normally closed
O - Normally open

5 Relief control
P - Leakproof Screw Adjustments
G - Temper Proof Cap

6 Valve housing material
A - Aluminum

7 Port size

Code	P, T	Gauge	Housing number
6W	3/4" BSPP	1/4" BSPP	6030455-001
12T	SAE 12	SAE 4	6030455-002

8 Relief pressure range
Note: Code based on pressure in psi.
20 - 10-210 bar (145-3000 psi)

9 Voltage rating
12D - 12 VDC
24D - 24 VDC
120A - 120 VAC
240A - 240 VAC

10 Connector types
GS - ISO 4400 DIN 43650 connector
PS - 1/2" NPT conduit
WS - Leadwire

11 Special features
00 - None
(Only required if valve has special features, omitted if "00".)

Composition chart

Cartridge	Description	Quantity
SV5-8-0-0-**	2 way/2 position N.O. poppet solenoid valve	1
SV5-8-C-0-**	2 way/2 position N.C. poppet solenoid valve	1
1VR100***-P*-** *	Vented relief valve	1

Dimensions

mm (inch)

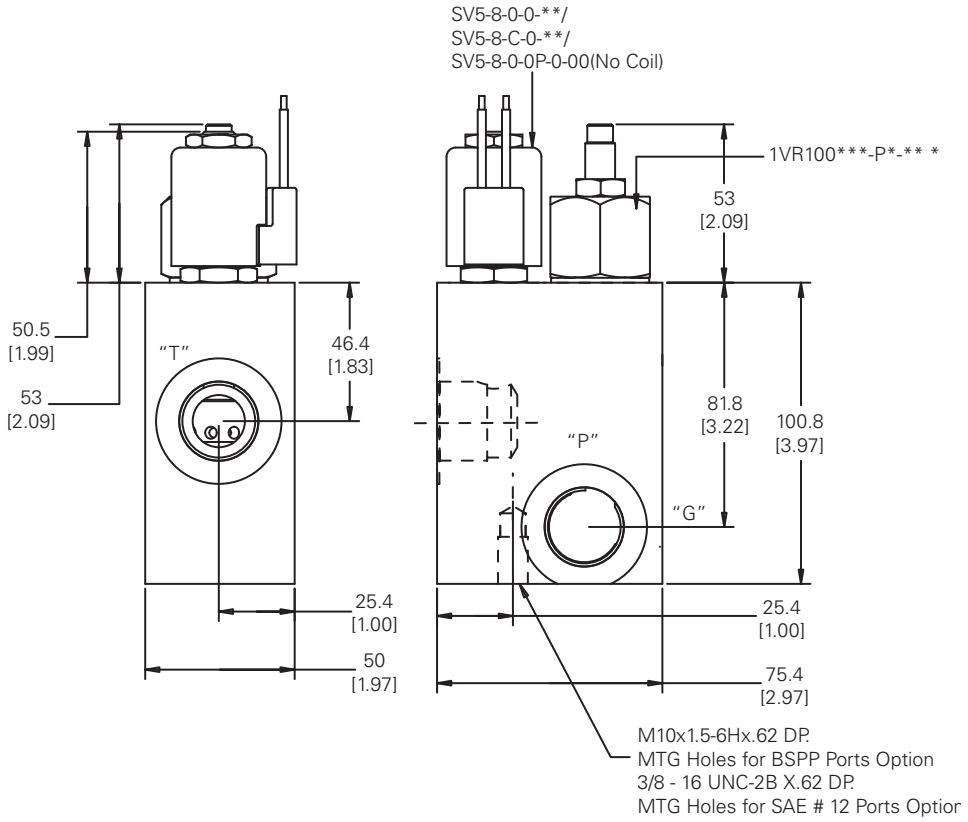

Where measurements are critical request certified drawings. We reserve the right to change specifications without notice.

SRV-16 - Solenoid vented relief valve

Normally open or normally closed
225 L/min (60 USgpm) • 210 bar (3000 psi)

Normally closed version

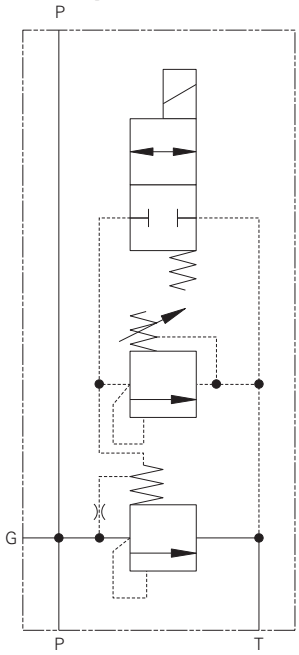

Operation

This standard valve package is designed for pump unloading via solenoid valve activation and pump relief, when the solenoid valve is not activated and system pressure reaches relief valve setting.

Features

Normally closed and normally open options, tamper proof or adjustable relief options. Low power requirements, gauge port. Aluminum in-line type housing, number of voltage and connector options.

All components in the package are true cartridges and can be removed from the housing without disturbing the plumbing.

Performance data

Ratings and specifications

Performance data is typical with fluid at 21,8 cST (105 SUS) and 49°C (120°F)		
Typical application pressure (all ports)		210 bar (3000 psi)
Flow rating		225 L/min (60 USgpm)
Internal leakage		160 L/min (10 in³/min) @ 210 bar (3000 psi)
Reseat pressure		80% of crack pressure
Typical vented ΔP		8 bar (120 psi) at rated flow
Coil specifications		16 watts
	Power requirements:	Continuous from 85% to 110% of nominal voltage
	Coil duty:	(AC coils are internally rectified)
Temperature range		-40° to 120° C (-40° to 248° F)
Fluids		All general purpose hydraulic fluids such as: MIL-H-5606, SAE 10, SAE 20, etc.

Normally open version

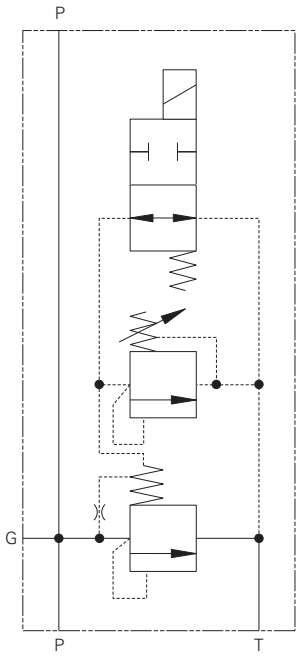

Pressure drop (unload)

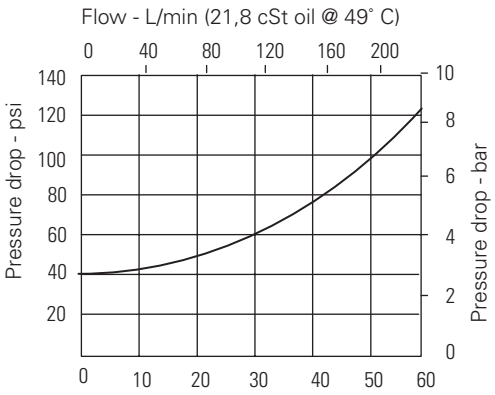

Pressure override

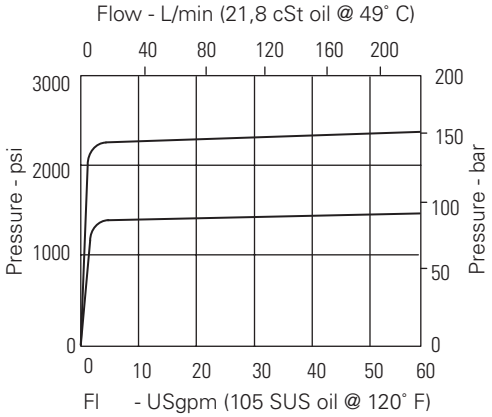

Description

Solenoid actuated relief valve.

Where measurements are critical request certified drawings. We reserve the right to change specifications without notice.

SRV-16 - Solenoid vented relief valve

Normally open or normally closed
225 L/min (60 USgpm) • 210 bar (3000 psi)

Model code

SRV	–	16	(V)	–	*	–	*	–	A	**	–	**	/	***	–	**	–	00
		1	2		3		4		5	6		7		8		9		10		11

1 Function
SRV - Solenoid actuated relief valve

2 Size
16 - 16 size

3 Seal material
Blank - Buna-N
V - Viton®

Viton is a registered trademark of E.I. DuPont

4 Type
C - Normally closed
O - Normally open

5 Relief control
C - Cap
K - Knob
S - Screw

6 Valve housing material
A - Aluminum

7 Port size

Code	P, T	Gauge
8G	1" BSPP	1/4" BSPP
16T	SAE 16	SAE 4
12T	SAE 12	SAE 4

8 Relief Pressure range
Note: Code based on pressure in psi.

15 - 3-100 bar (50-1500 psi)
30 - 70-210 bar (1000-3000 psi)

9 Voltage rating
12D - 12 VDC
24D - 24 VDC
120A - 125 VAC
240A - 240 VAC

10 Connector types
GS -ISO 4400 DIN 43650 connector
PS - 1/2" NPT conduit
WS - Lead wire

11 Special features
00 - None

(Only required if valve has special features, omitted if "00".)

Composition chart

Cartridge	Description	Quantity
SV4-8-0-0-**	2 way/2 position N.O. poppet solenoid valve	1
SV4-8-C-0-0-**	2 way/2 position N.C. poppet solenoid valve	1
RV8-8-*-0-**	Relief valve	1
DPS2-16-V-F-0-80	Differential pressure sensing valve	1

Dimensions
mm (inch)

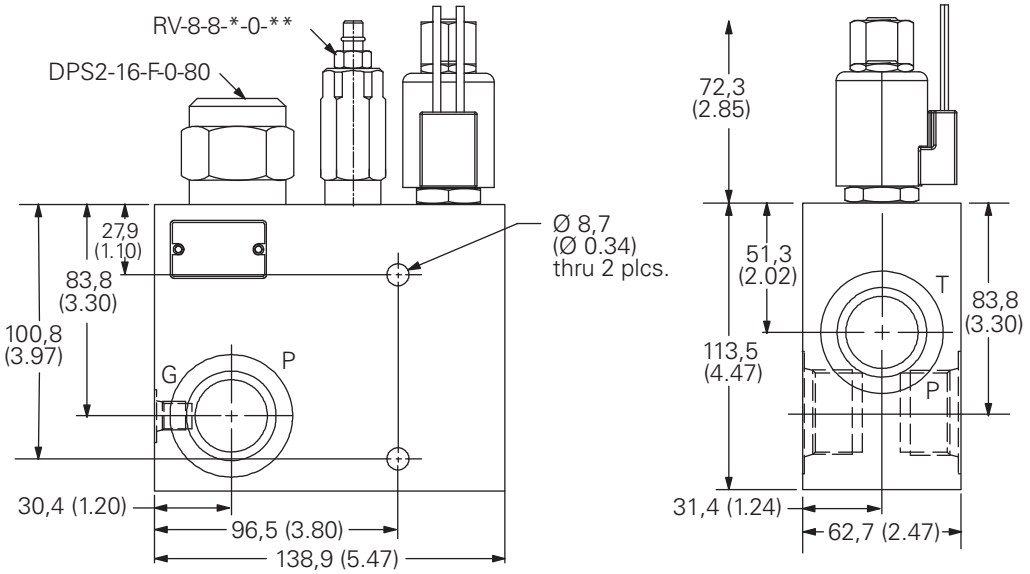

Where measurements are critical request certified drawings. We reserve the right to change specifications without notice.

SRV-20 - Solenoid vented relief valve

Normally open or normally closed
300 L/min (80 USgpm) • 210 bar (3000 psi)

Normally closed version

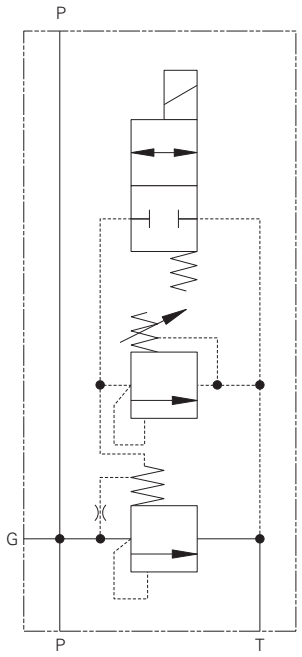

Operation

This standard valve package is designed for pump unloading via solenoid valve activation and pump relief, when the solenoid valve is not activated and system pressure reaches relief valve setting.

Features

Normally closed and normally open options, tamper proof or adjustable relief options. Low power requirements, gauge port. Aluminum in-line type housing, number of voltage and connector options.

All components in the package are true cartridges and can be removed from the housing without disturbing the plumbing.

Performance data

Ratings and specifications

Performance data is typical with fluid at 21,8 cST (105 SUS) and 49°C (120°F)		
Typical application pressure (all ports)		210 bar (3000 psi)
Flow rating		300 L/min (80 USgpm)
Internal leakage		160 cm³/min (10 in³/min) @ 210 bar (3000 psi)
Reseat pressure		80% of crack pressure
Typical vented ΔP		9 bar (135 psi) at rated flow
Coil specifications	Power requirements: Coil duty:	16 watts Continuous from 85% to 110% of nominal voltage (AC coils are internally rectified)
Temperature range		-40° to 120° C (-40° to 248° F)
Fluids		All general purpose hydraulic fluids such as: MIL-H-5606, SAE 10, SAE 20, etc.

Normally open version

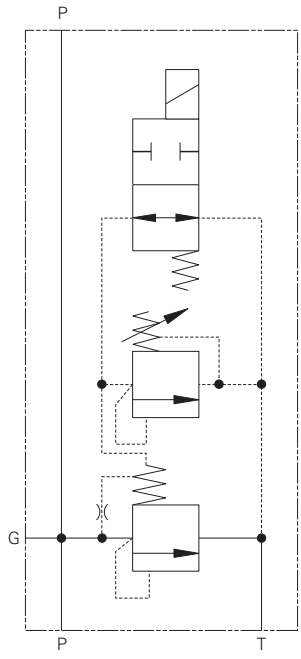

Pressure drop (unloading)

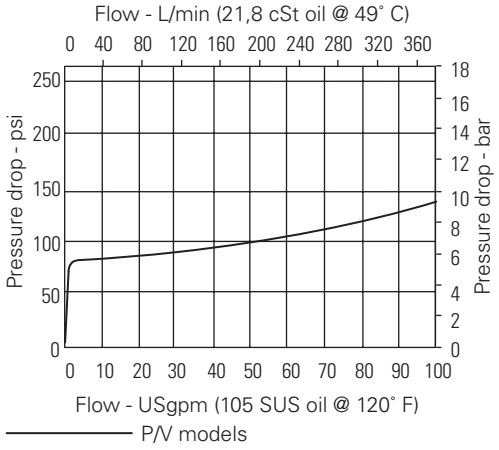

Pressure override

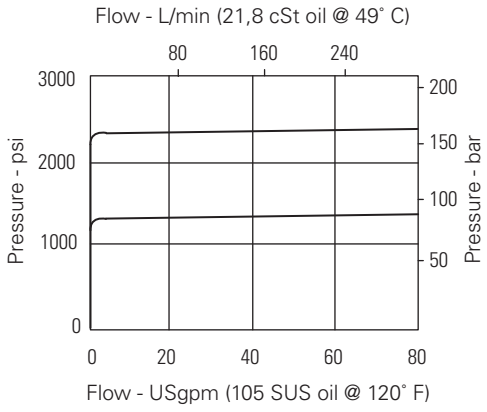

Description

Solenoid actuated relief valve.

K

Where measurements are critical request certified drawings. We reserve the right to change specifications without notice.

SRV-20 - Solenoid vented relief valve

Normally open or normally closed
300 L/min (80 USgpm) • 210 bar (3000 psi)

Model code

SRV	–	20	(V)	–	*	–	*	–	A	**	–	**	/	***	–	**	–	00
1		2	3		4		5		6	7		8		9		10		11

1 Function
SRV - Solenoid actuated relief valve

2 Size
20 - 20 size

3 Seal material
Blank - Buna-N
V - Viton®

Viton is a registered trademark of E.I. DuPont

4 Type
C - Normally closed
O - Normally open

5 Relief control
C - Cap
K - Knob
S - Screw

6 Valve housing material
A - Aluminum

7 Port size

Code	P, T	Gauge	Housing
12G	1 1/4" BSPP	1/4" BSPP	02-178312
20T	SAE 20	SAE 4	02-178313

8 Relief Pressure range
Note: Code based on pressure in psi.

15 - 3-100 bar (50-1500 psi)
30 - 70-210 bar (1000-3000 psi)

9 Voltage rating
12D - 12 VDC
24D - 24 VDC
120A - 125 VAC
240A - 240 VAC

10 Connector types
GS - ISO 4400 DIN 43650 connector
PS - 1/2" NPT conduit
WS - Leadwire

11 Special features
00 - None

(Only required if valve has special features, omitted if "00".)

Composition chart

Cartridge	Description	Quantity
SV4-8-0-0-**	2 way/2 position N.O. poppet solenoid valve	1
SV4-8-C-0-**	2 way/2 position N.C. poppet solenoid valve	1
RV8-8-*-0-**	Relief valve	1
DPS2-20-V-F-0-80	Differential pressure sensing valve	1

Dimensions
mm (inch)

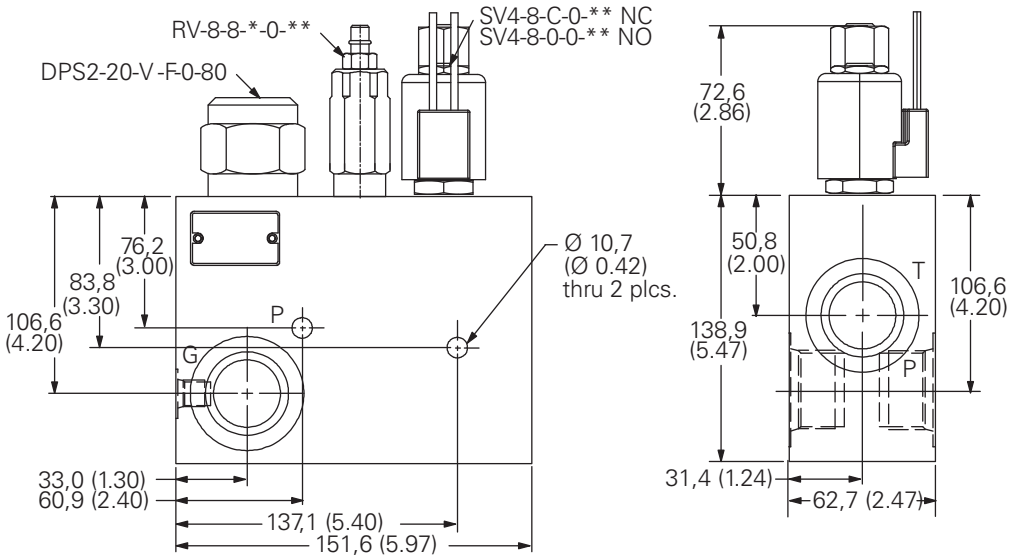

Where measurements are critical request certified drawings. We reserve the right to change specifications without notice.

CRV-10 - Relief valve

Cross port
76 L/min (20 USgpm) • 17-210 bar (250-3000 psi)

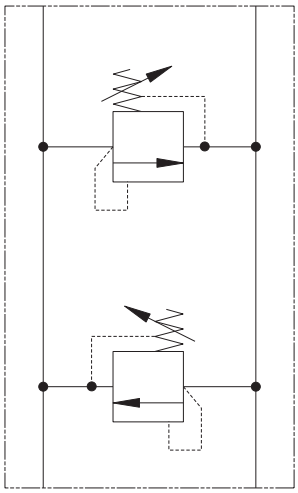

Operation

This standard valve package is used to provide pressure relief for bi-directional motors and cylinders.

Features

Tamper proof and adjustable relief options. Aluminum in-line type housing.

All components in the package are true cartridges and can be removed from the housing without disturbing the plumbing.

Performance data

Ratings and specifications

Performance data is typical with fluid at 21,8 cST (105 SUS) and 49°C (120°F)	
Typical application pressure (all ports)	17-210 bar (250-3000 psi)
Flow rating	76 L/min (20 USgpm)
Reseat pressure	90% of crack pressure
Temperature range	-40° to 120° C (-40° to 248° F)
Fluids	All general purpose hydraulic fluids such as: MIL-H-5606, SAE 10, SAE 20, etc.

Description

Cross port relief valve.

Pressure override

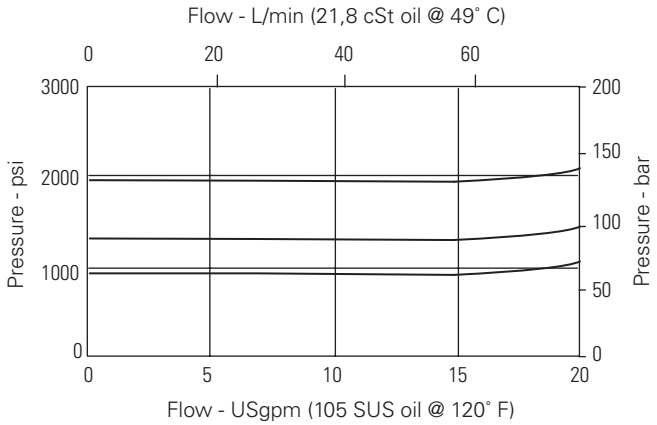

Where measurements are critical request certified drawings. We reserve the right to change specifications without notice.

CRV-10 - Relief valve

Cross port
76 L/min (20 USgpm) • 17-210 bar (250-3000 psi)

Model code

CRV	–	10	(V)	–	*	–	A	**	–	**	/	**	–	00
1		2	3		4		5	6		7		8		9

1 Function
CRV - Cross-port relief valve

2 Size
10 - 10 size

3 Seal material
Blank - Buna-N
V - Viton®
Viton is a registered trademark of E.I. DuPont

4 Relief control
C - Cap
K - Knob
S - Screw

5 Valve housing material
A - Aluminum

6 Port size

Code	Port size	Housing number
3G	3/8" BSPP	02-178476
8T	SAE 8	889185

7 Pressure Range
Note: Code based on pressure in psi.
6 - 6-40 bar (100-600 psi)
36 - 40-250 bar (600-3600 psi)

8 Pressure Setting -
user requested in 50 PSI steps
Example:
10 - 1000 psi
10.5 - 1050 psi

9 Special Features
00 - None
(Only required if valve has special features, omitted if "00".)

Composition chart

Cartridge	Description	Quantity
RV3A-10-*-0-**	Relief valve	2

Dimensions

mm (inch)

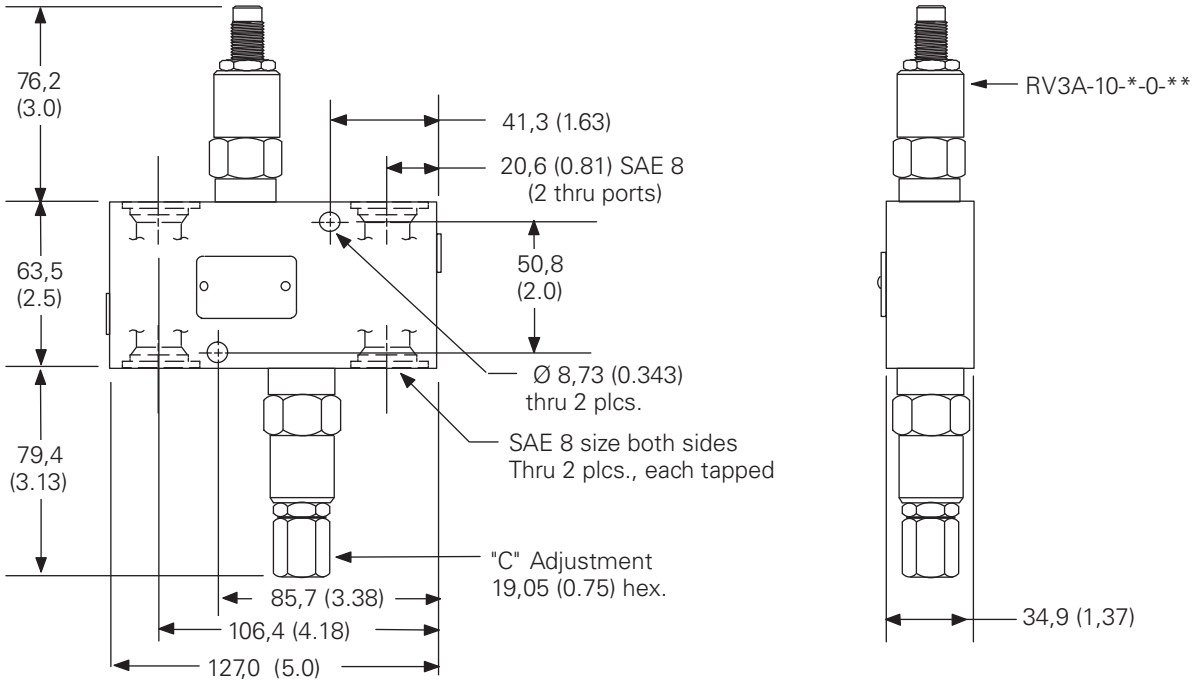

Where measurements are critical request certified drawings. We reserve the right to change specifications without notice.

CRV-16 - Relief valve

Cross port
303 L/mim (80 USgpm) • 17-172 bar (250-2500 psi)

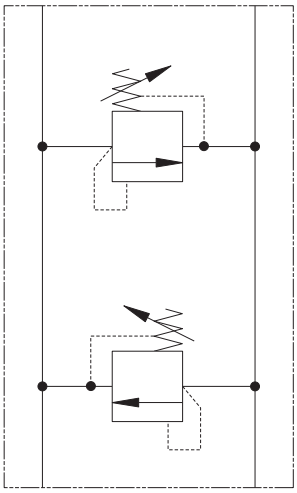

Operation

This standard valve package is used to provide pressure relief for bi-directional motors and cylinders.

Features

Tamper proof and adjustable relief options. Aluminum in-line type housing.

All components in the package are true cartridges and can be removed from the housing without disturbing the plumbing.

Performance data

Ratings and specifications

Performance data is typical with fluid at 21,8 cST (105 SUS) and 49°C (120°F)	
Typical application pressure (all ports)	17-172 bar (250-2500 psi)
Flow rating	300 L/min (80 USgpm)
Reseat pressure	90% of crack pressure
Temperature range	-40° to 120° C (-40° to 248° F)
Fluids	All general purpose hydraulic fluids such as: MIL-H-5606, SAE 10, SAE 20, etc.

Description

Cross port relief valve.

Pressure override

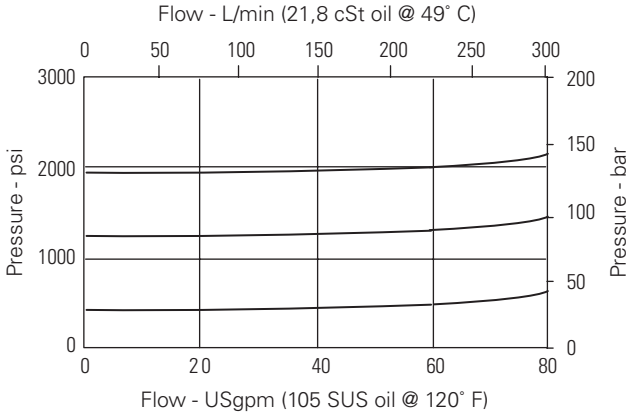

K

Where measurements are critical request certified drawings. We reserve the right to change specifications without notice.

CRV-16 - Relief valve

Cross port
303 L/mim (80 USgpm) • 17-172 bar (250-2500 psi)

Model code

CRV – 16 (V) – * – A * – ** / ** – 00**

1 2 3 4 5 6 7 8 9

1 Function
CRV - Cross-port relief valve

2 Size
16 - 16 size

3 Seal material
Blank - Buna-N
V - Viton®

Viton is a registered trademark of E.I. DuPont

4 Relief control
C - Cap
K - Knob
S - Screw

5 Valve housing material
A - Aluminum

6 Port size

Code	Port size	Housing number
8G	1" BSPP	02-178477
16T	SAE 16	889189

7 Pressure range
Note: Code based on pressure in psi.

25 - 17-175 bar (250-2500 psi)

8 Pressure setting -
user requested in 50 PSI steps
Example:

10 - 1000 psi
10.5 - 1050 psi

9 Special features
00 - None

(Only required if valve has special features, omitted if "00".)

Composition chart

Cartridge	Description	Quantity
RV3A-16-*-0-**	Relief valve	2

Dimensions
mm (inch)

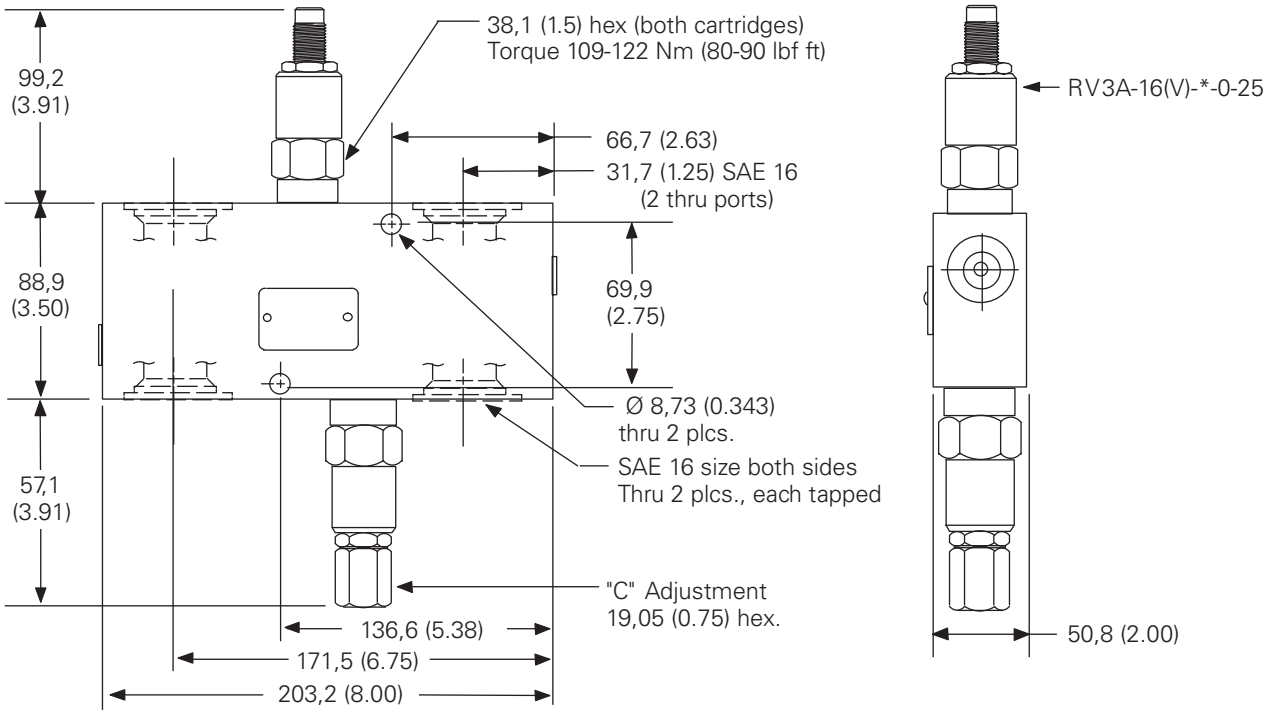

Where measurements are critical request certified drawings. We reserve the right to change specifications without notice.

RGV-30 - Regenerative valve

Pressure sensitive
30 L/min (8 USgpm) • 210 bar (3000 psi)

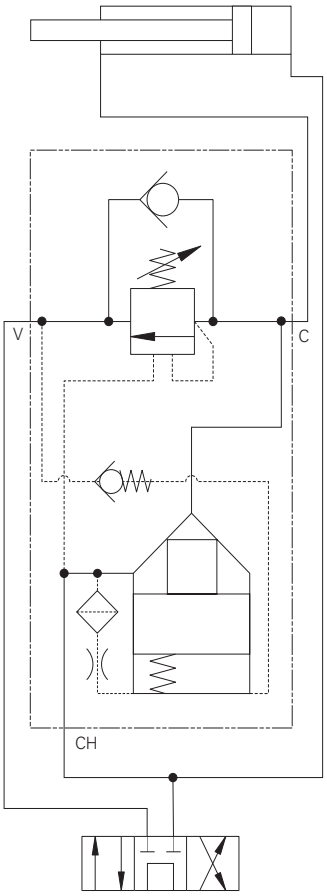

Operation

This standard valve package provides means for fast extension of a cylinder at low pressure without additional pump flow. This package diverts rod end flow to the head end in order to accelerate the load. When the load induced pressure reaches a predetermined level, the valve closes off. Rod end oil is automatically diverted to tank and the full pump pressure is applied, allowing maximum force to develop at lower speed.

When applying pressure sensitive regenerative valves consider the following: Rod to diameter ratio. The pressure required to move a cylinder. Losses due to high flows and seal friction may prevent a circuit from staying in regeneration.

Features

Automatic kick out of regenerative operation made via load pressure sensing. Tamper proof and adjustable pressure setting options. Provides a smooth transition and decrease of the regenerative flow through use of a counterbalance valve. Aluminum in-line type housing.

Performance data

Ratings and specifications

Performance data is typical with fluid at 21,8 cST (105 SUS) and 49°C (120°F)	
Typical application pressure (all ports)	210 bar (3000 psi)
Maximum regenerative flow Regeneration diminishes progressively above setting of 1CE30	30 L/min (8 USgpm)
Temperature range	-40° to 120° C (-40° to 248° F)

Notes: Regeneration circuits apply only to single rod cylinders in extension direction.

Description

Pressure sensitive regenerative valve package.

Pressure drop

A - Port CR to CH

B - Port VR to CR

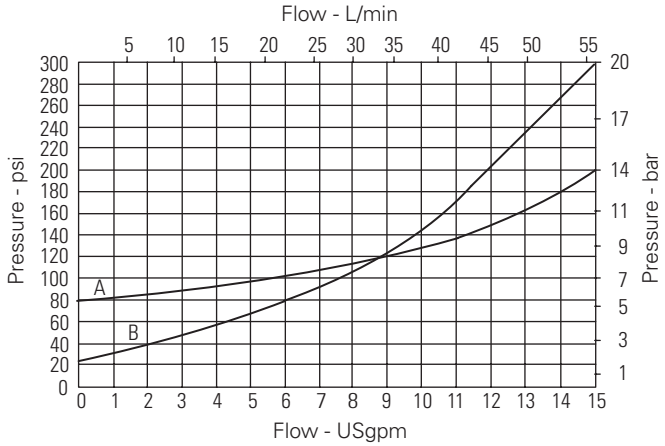

K

Where measurements are critical request certified drawings. We reserve the right to change specifications without notice.

RGV-30 - Regenerative valve

Pressure sensitive
30 L/min (8 USgpm) • 210 bar (3000 psi)

Model code

RGV – 30 (V) – * – A *** – ** / ** – 00

1 2 3 4 5 6 7 8 9

1 Function

RGV - Pressure sensitive regeneration valve

2 Size

30 - 10 size

3 Seal material

Blank - Buna-N
V - Viton®

Viton is a registered trademark of E.I. DuPont

4 Relief control

F - Screw adjustment
N - Fixed - State pressure setting required

5 Valve housing material

A - Aluminum

6 Port size

Code	Port size	Housing number
4G	1/2" BSPP	6029951-001
10T	SAE 10	6029950-001

7 Pressure range*

Note: Code based on pressure in psi.

20 - 70 - 210 bar. std. setting 100 bar

*System pressure is limited to 210 bar (3000 psi)

8 Pressure setting -

user requested in 50 PSI steps
Example:

10 - 1000 psi
10.5 - 1050 psi

9 Special features

00 - None

(Only required if valve has special features, omitted if "00".)

Composition chart

Cartridge	Description	Quantity
1CE30-F-20-S-5	Counterbalance valve	1
DPS2-10-S-F-0-80	Differential pressure sensing	1
566395	Sense check kit	1

Application notes

Formulas to calculate flow in regeneration circuits are:
(where Db = Bore Diameter and Dr = Rod Diameter)

Combined Flow (pump flow plus regenerative flow) = $\frac{Db^2}{Dr^2}$ X Pump Flow

Regenerative Flow (flow out rod end) = $\frac{Db^2 - Dr^2}{Dr^2}$ X Pump Flow

Retraction Flow (flow out of the bind end during retraction) = $\frac{Db^2}{Db^2 - Dr^2}$ X Pump Flow

Dimensions

mm (inch)

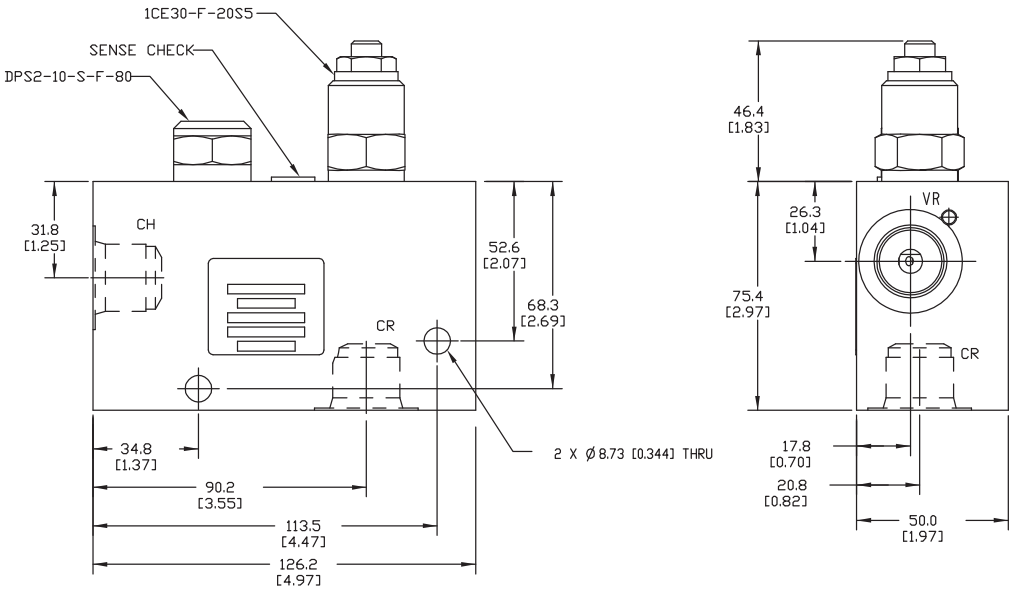

Note: This valve package should not be used as a load holding or load lowering control valve.

Where measurements are critical request certified drawings. We reserve the right to change specifications without notice.

RGV-90 - Regenerative valve

Pressure sensitive
90 L/min (23 USgpm) • 210 bar (3000 psi)

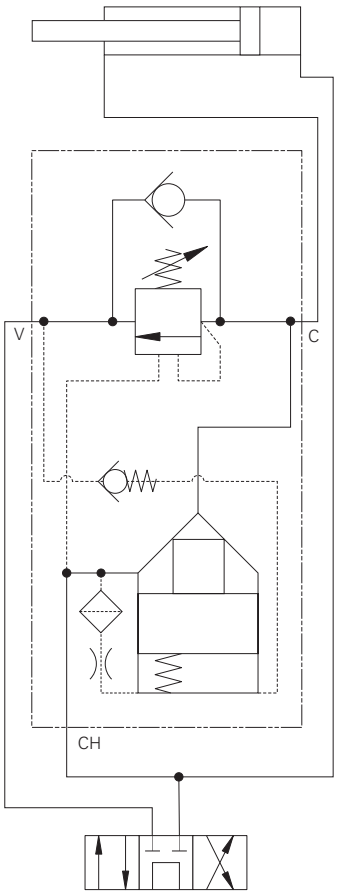

Operation

This standard valve package provides means for fast extension of a cylinder at low pressure without additional pump flow. This package diverts rod end flow to the head end in order to accelerate the load. When the load induced pressure reaches a predetermined level, the valve closes off. Rod end oil is automatically diverted to tank and the full pump pressure is applied, allowing maximum force to develop at lower speed.

When applying pressure sensitive regenerative valves consider the following: Rod to diameter ratio. The pressure required to move a cylinder. Losses due to high flows and seal friction may prevent a circuit from staying in regeneration.

Features

Automatic kick out of regenerative operation made via load pressure sensing. Tamper proof and adjustable pressure setting options. Provides a smooth transition and decrease of the regenerative flow through use of a counterbalance valve. Aluminum in-line type housing.

Performance data

Ratings and specifications

Performance data is typical with fluid at 21,8 cst (105 sus) and 49°c (120°f)	
Typical application pressure (all ports)	210 bar (3000 psi)
Maximum regenerative flow Regeneration diminishes progressively above setting of 1CE90	90 L/min (23 USgpm)
Temperature range	-40° to 102° C (-40° to 248° F)

Notes: Regeneration circuits apply only to single rod cylinders in extension direction.

Description

Pressure sensitive regenerative valve package.

Pressure drop

A - Port CR to CH

B - Port VR to CR

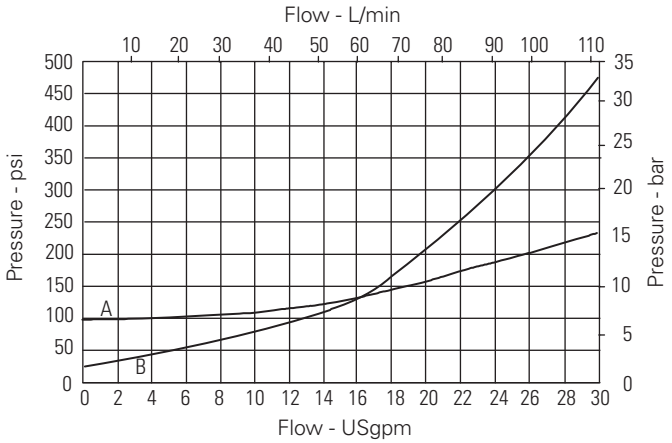

K

Where measurements are critical request certified drawings. We reserve the right to change specifications without notice.

RGV-90 - Regenerative valve

Pressure sensitive
90 L/min (23 USgpm) • 210 bar (3000 psi)

Model code

RGV _ 90 (V) _ * A * _ ** / ** _ 00**

1 2 3 4 5 6 7 8 9

1 Function

RGV - Pressure sensitive regeneration valve

2 Size

90 - 12 size

3 Seal material

Blank - Buna-N
V - Viton®

Viton is a registered trademark of E.I. DuPont

4 Relief control

F - Screw adjustment
N - Fixed - State pressure setting required

5 Valve housing material

A - Aluminum

6 Port size

Code	Port size	Housing number
6G	3/4" BSPP	6029914-001
12T	SAE 12	6029909-001

7 Pressure range*

Note: Code based on pressure in psi.

20 - 70 - 225 bar. std. setting 100 bar

*System pressure is limited to 210 bar (3000 psi)

8 Pressure setting -

user requested in 50 PSI steps Example:

10 - 1000 psi
10.5 - 1050 psi

9 Special features

00 - None

(Only required if valve has special features, omitted if "00".)

Composition chart

Cartridge	Description	Quantity
1CE90-F-20-*-4	Counterbalance valve	1
DPS2-16-S-F-0-80	Differential pressure sensing	1
566395	Sense check kit	1

Application Notes

Formulas to calculate flow in regeneration circuits are:
(where Db = Bore Diameter and Dr = Rod Diameter)

Combined Flow (pump flow plus regenerative flow) = $\frac{Db^2}{Dr^2}$ X Pump Flow

Regenerative Flow (flow out rod end) = $\frac{Db^2 - Dr^2}{Dr^2}$ X Pump Flow

Retraction Flow (flow out of the bind end during retraction) = $\frac{Db^2}{Db^2 - Dr^2}$ X Pump Flow

Dimensions

mm (inch)

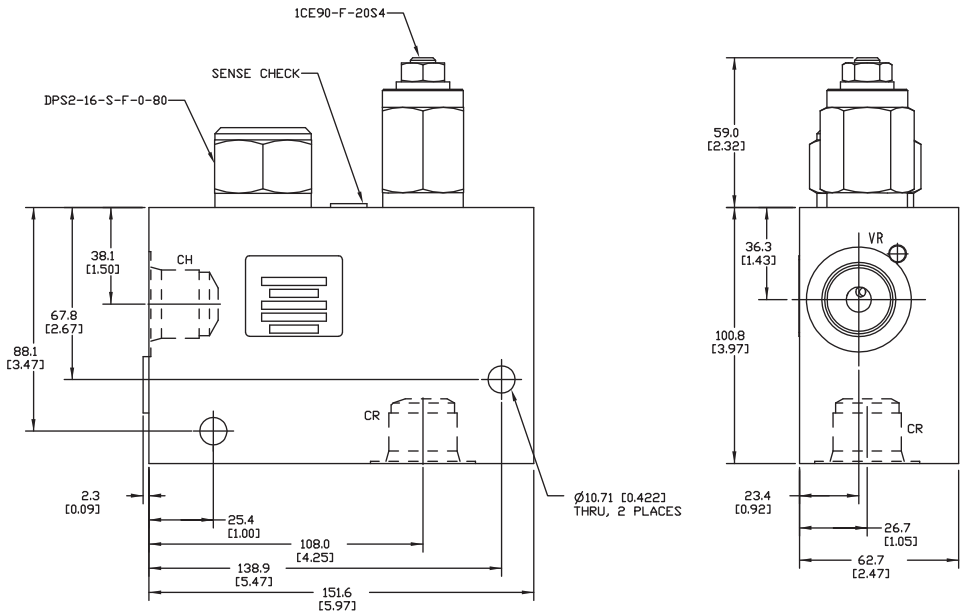

Notes: This valve package should not be used as a load holding or load lowering control valve.

Where measurements are critical request certified drawings. We reserve the right to change specifications without notice.

RLV-30 - Regenerative valve

With load locking
30 L/min (8 USgpm) • 210 bar (3000 psi)

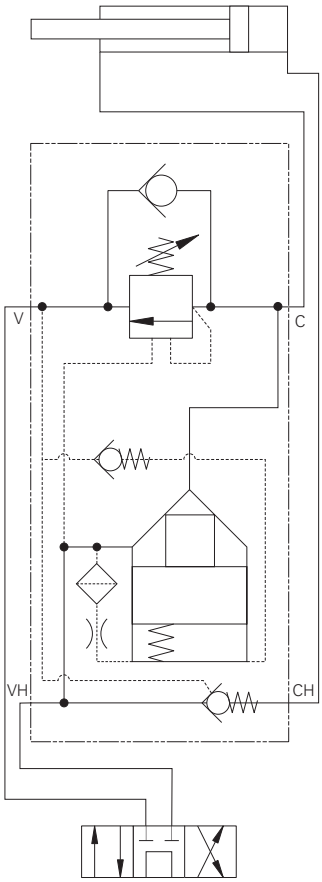

Operation

This standard valve package provides means for fast extension of a cylinder at low pressure without additional pump flow. This package diverts rod end flow to the head end in order to accelerate the load. When the load induced pressure reaches a predetermined level, the valve closes off. Rod end oil is automatically diverted to tank and the full pump pressure is applied, allowing maximum force to develop at lower speed.

When applying pressure sensitive regenerative valves consider the following: Rod to diameter ratio. The pressure required to move a cylinder. Losses due to high flows and seal friction may prevent a circuit from staying in regeneration.

Features

Automatic kick out of regenerative operation made via load pressure sensing. Tamper proof and adjustable pressure setting options. Provides a smooth transition and decrease of the regenerative flow through use of a counterbalance valve. Provides manual override on POC cartridge to lower the load in the event of power loss. Aluminum in-line type housing.

Performance data

Ratings and specifications

Performance data is typical with fluid at 21,8 cST (105 SUS) and 49°C (120°F)	
Typical application pressure (all ports)	210 bar (3000 psi)
Maximum regenerative flow Regeneration diminishes progressively above setting of 1CE30	30 L/min (8 USgpm)
Temperature range	-40° to 120° C (-40° to 248° F)

Notes: Regeneration circuits apply only to single rod cylinders in extension direction.

Description

Pressure sensitive regenerative valve package with load locking.

Pressure drop

A - Port CR to CH
B - Port VR to CR
C - Port VH to CH

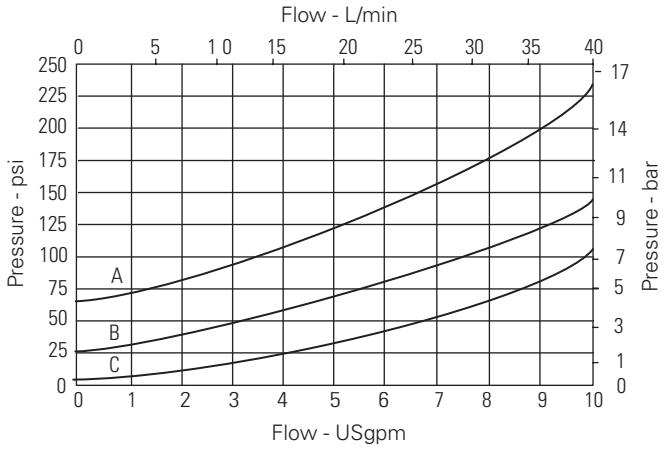

K

Where measurements are critical request certified drawings. We reserve the right to change specifications without notice.

RLV-30 - Regenerative valve

With load locking
30 L/min (8 USgpm) • 210 bar (3000 psi)

Model code

RLV	–	30	(V)	–	*	–	A	***	–	**	/	**	–	00
1		2	3		4		5	6		7		8		9

1 Function
RLV - Pressure sensitive regeneration valve with load holding check valve.

2 Size
10 - 10 size

3 Seal material
Blank - Buna-N
V - Viton®

Viton is a registered trademark of E.I. DuPont

4 Relief control
F - Screw adjustment
N - Fixed - Stare pressure setting required

5 Valve housing material
A - Aluminum

6 Port size

Code	Port size	Housing number
4G	1/2" BSPP	6029965-001
10T	SAE 10	6029964-001

7 Pressure range*
Note: Code based on pressure in psi.

20 - 70 - 210 bar. std. setting 100 bar

*System pressure is limited to 210 bar (3000 psi)

8 Pressure setting -
user requested in 50 PSI steps Example:

10 - 1000 psi
10.5 - 1050 psi

9 Special features
00 - None

(Only required if valve has special features, omitted if "00".)

Composition chart

Cartridge	Description	Quantity
1CE30-F-*20-*-4	Counterbalance valve	1
DPS2-10-S-F-0-80	Differential pressure sensing	1
4CK30-1S3	Pilot operated check valve	1
566395	Sense check kit	1

Application notes

Formulas to calculate flow in regeneration circuits are:
(where Db = Bore Diameter and Dr = Rod Diameter)

Combined Flow (pump flow plus regenerative flow) = $\frac{Db^2}{Dr^2}$ X Pump Flow

Regenerative Flow (flow out rod end) = $\frac{Db^2 - Dr^2}{Dr^2}$ X Pump Flow

Retraction Flow (flow out of the bind end during retraction) = $\frac{Db^2}{Db^2 - Dr^2}$ X Pump Flow

Dimensions
mm (inch)

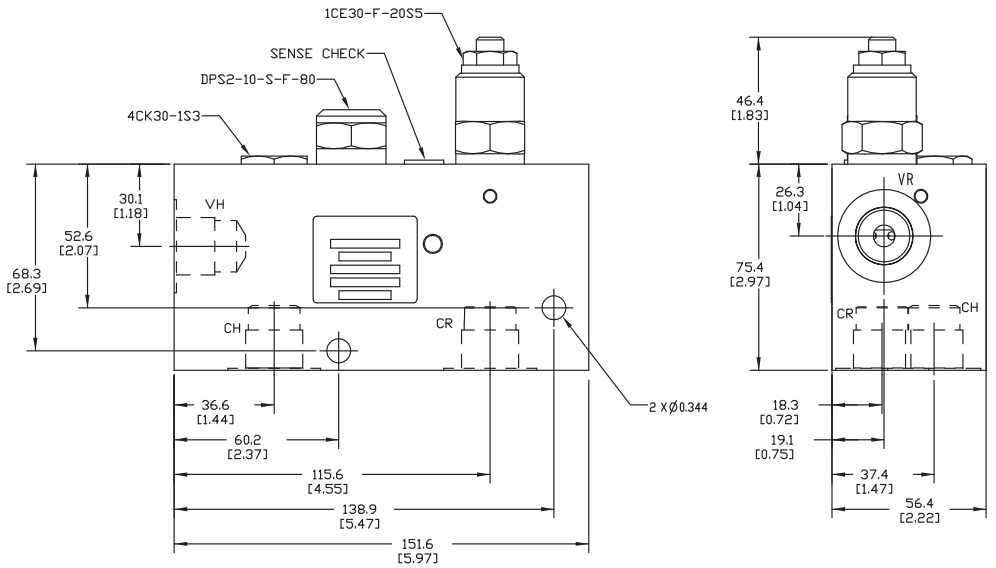

Notes: This valve package should not be used as a load holding or load lowering control valve.

Where measurements are critical request certified drawings. We reserve the right to change specifications without notice.

RLV-90 - Regenerative valve

With load locking
90 L/min (23 USgpm) • 210 bar (3000 psi)

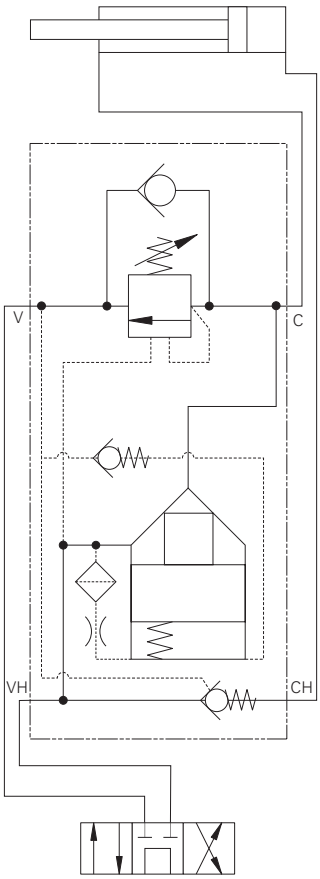

Operation

This standard valve package provides means for fast extension of a cylinder at low pressure without additional pump flow. This package diverts rod end flow to the head end in order to accelerate the load. When the load induced pressure reaches a predetermined level, the valve closes off. Rod end oil is automatically diverted to tank and the full pump pressure is applied, allowing maximum force to develop at lower speed.

When applying pressure sensitive regenerative valves consider the following: Rod to diameter ratio. The pressure required to move a cylinder. Losses due to high flows and seal friction may prevent a circuit from staying in regeneration.

Features

Automatic kick out of regenerative operation made via load pressure sensing. Tamper proof and adjustable pressure setting options. Provides a smooth transition and decrease of the regenerative flow through use of a counterbalance valve. Provides manual override on POC cartridge to lower the load in the event of power loss. Aluminum in-line type housing.

Performance data

Ratings and specifications

Performance data is typical with fluid at 21,8 cST (105 SUS) and 49°C (120°F)	
Typical application pressure (all ports)	210 bar (3000 psi)
Maximum regenerative flow Regeneration diminishes progressively above setting of 1CE90	90 L/min (23 USgpm)
Temperature range	-40° to 120° C (-40° to 248° F)

Notes: Regeneration circuits apply only to single rod cylinders in extension direction.

Description

Pressure sensitive regenerative valve package with load locking.

Pressure drop

A - Port CR to CH
B - Port VR to CR
C - Port VH to CH

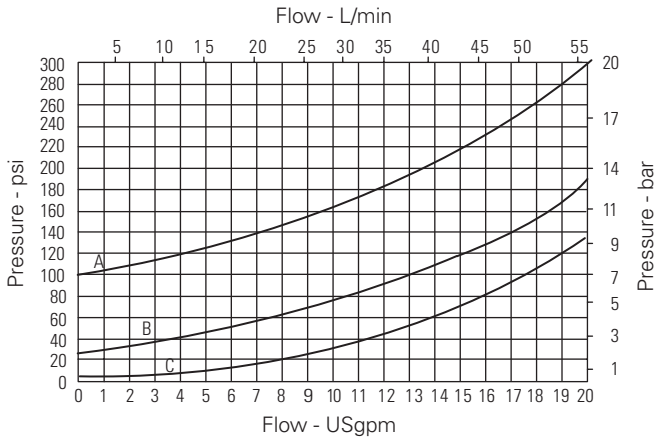

Where measurements are critical request certified drawings. We reserve the right to change specifications without notice.

RLV-90 - Regenerative valve

With load locking
114 L/min (30 USgpm) • 210 bar (3000 psi)

Model code

RLV	–	90	(V)	–	*	–	A	***	–	**	/	**	–	00
1		2	3		4		5	6		7		8		9

1 Function

RLV - Pressure sensitive regeneration valve w/ load holding check valve

2 Size

90 - 12 size

3 Seal material

Blank - Buna-N
V - Viton®
Viton is a registered trademark of E.I. DuPont

4 Relief control

F - Screw adjustment
N - Fixed - Stare pressure setting required

5 Valve housing material

A - Aluminum

6 Port size

Code	Port Size	Housing number
6G	3/4" BSPP	02-178936
12T	SAE 12	02-178935

7 Pressure range*

Note: Code based on pressure in psi.
20 - 70 - 225 bar. std setting 100 bar
*System pressure is limited to 210 bar (3000 psi)

8 Pressure setting - user requested in 50 PSI steps

Example:
10 - 1000 psi
10.5 - 1050 psi

9 Special features

00 - None
(Only required if valve has special features, omitted if "00".)

Composition chart

Cartridge	Description	Quantity
1CE90-F-20-*-4	Counterbalance valve	1
DPS2-16-S-F-0-80	Differential pressure sensing	1
POC1-12-S-0-005	Pilot operated check valve	1
566395	Sense check kit	1

Application Notes

Formulas to calculate flow in regeneration circuits are:
(where Db = Bore Diameter and Dr = Rod Diameter)

Combined Flow (pump flow plus regenerative flow) = $\frac{Db^2}{Dr^2}$ X Pump Flow

Regenerative Flow (flow out rod end) = $\frac{Db^2 - Dr^2}{Dr^2}$ X Pump Flow

Retraction Flow (flow out of the bind end during retraction) = $\frac{Db^2}{Db^2 - Dr^2}$ X Pump Flow

Dimensions

mm (inch)

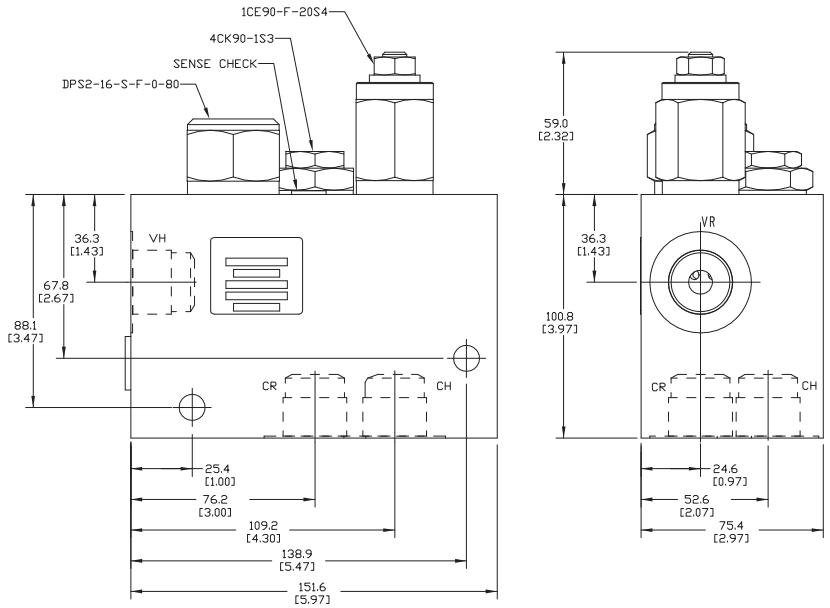

Notes: This valve package should not be used as a load holding or load lowering control valve.

Where measurements are critical request certified drawings. We reserve the right to change specifications without notice.

SCR-1 - Cross port relief

With shuttle and solenoid vent
Up to 114 L/min (30 USgpm) • 210 bar (3000 psi)

Normally Open Version

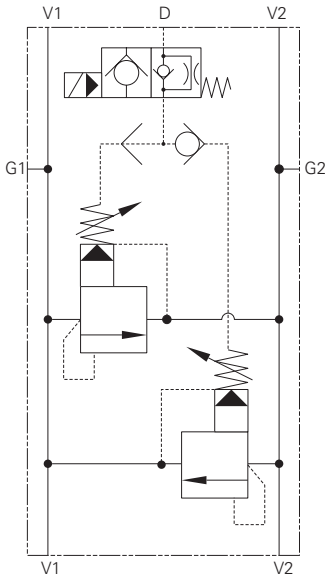

Operation

This standard valve package is used to provide pressure line relief for bi-directional motors and cylinders. With the addition of a remotely controlled shuttle valve, allowance is made for motor slip or cylinder dump conditions.

Features

Normally closed and normally open options. Tamper proof or adjustable relief options, gauge port. Low power requirements, number of voltages and connectors options. Aluminum in line type housing.

All components in the package are true cartridges and can be removed from the housing without disturbing the plumbing.

Performance data

Ratings and specifications

Performance data is typical with fluid at 21,8 cST (105 SUS) and 49°C (120°F)		
Typical application pressure (all ports)		210 bar (3000 psi)
Flow rating		114 L/min (30 USgpm)
Reseat pressure		90% of crack pressure
Coil specifications	Power requirements: Coil duty:	16 watts Magnet wire – UL class N rated (200° C) Continuous from 85% to 110% of nominal voltage (AC coils are internally rectified)
Temperature range		-40° to 120° C (-40° to 248° F)

Notes: Regeneration circuits apply only to single rod cylinders in extension direction.

Normally Closed Version

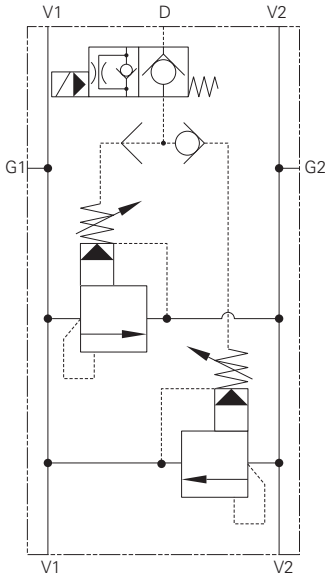

Pressure drop

A - 30 - pressure range code

B - 15 - pressure range code

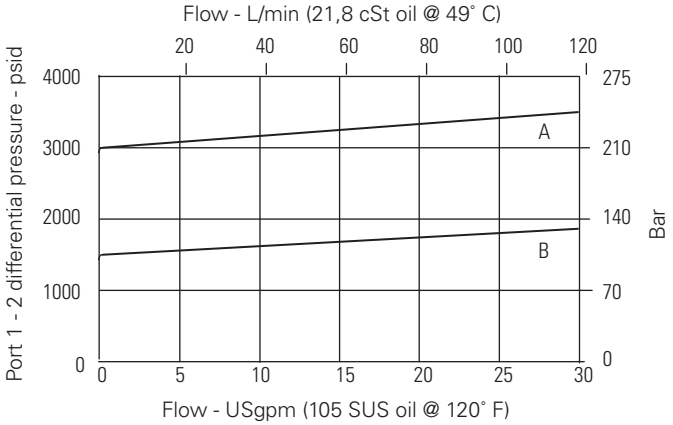

Description

Cross port relief with shuttle and solenoid vent.

K

Where measurements are critical request certified drawings. We reserve the right to change specifications without notice.

SCR-1 - Cross port relief

With shuttle and solenoid vent
Up to 114 L/min (30 USgpm) • 210 bar (3000 psi)

Model code

SCR	–	1	(V)	–	*	–	*	–	A	**	**	/	**	–	***	**	–	00
1		2	3		4		5		6	7	8		9		10	11		12

1 Function

SCR - Solenoid actuated crossover relief valve with shuttle

2 Size

1 - 114 L/min (30 USgpm)

3 Seal material

Blank - Buna-N
V - Viton®
Viton is a registered trademark of E.I. DuPont

4 Type

C - Normally closed
O - Normally open

5 Relief control

C - Cap
K - Knob
S - Screw

6 Valve housing material

A - Aluminum

7 Port size

Code	V1, V2	Gauge	Drain	Housing number
6G	3/4" BSPP	1/4" BSPP	3/8" BSPP	02-178938
12T	SAE 12	SAE 4	SAE 6	02-178937

8 Pressure range*

Note: Code based on pressure in psi.
15 - 5-100 bar (75-1500 psi)
30 - 10-210 bar (150-3000 psi)
***System pressure is limited to 210 bar (3000 psi)**

9 Pressure setting -

user requested in 50 psi steps
Example:
10 - 1000 psi
10.5 - 1050 psi

10 Voltage rating

12D - 12 VDC
24D - 24 VDC
120A - 120 VAC
240A - 240 VAC

11 Connector types

GS - ISO 4400 DIN 43650 connector
PS - 1/2" NPT conduit
WS - Leadwire

12 Special features

00 - None
(Only required if valve has special features, omitted if "00".)

Composition chart

Cartridge	Description	Quantity
VRV11-12-*-0-**/	Ventable relief valve	2
DSV2-8-B-0	Shuttle valve	1
SV5-8-C-0-**	Solenoid valve, N.C.	1
SV5-8-O-0-**	Solenoid valve, N.O.	1

Dimensions

mm (inch)

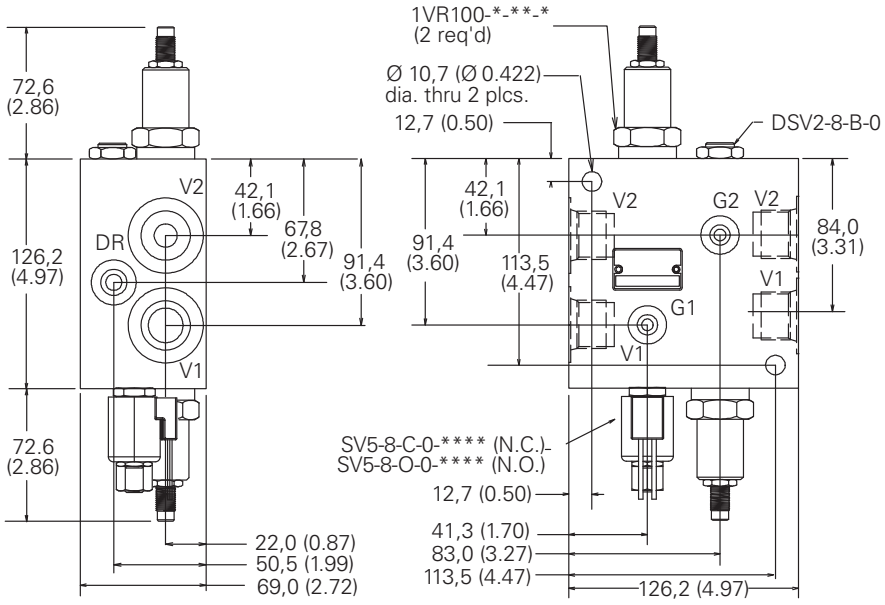

Where measurements are critical request certified drawings. We reserve the right to change specifications without notice.

1UL255 - Unloading valve

Two pump
Up to 200 L/min (40 USgpm) • 350 bar (5000 psi)

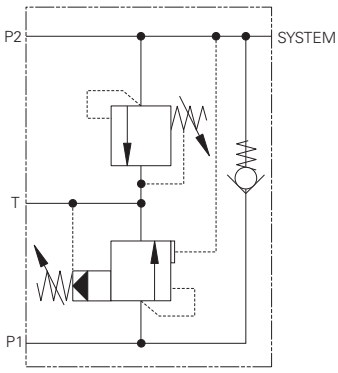

Operation

Pump inlet to P1 and P2 is combined to give maximum flow at low pressure. When the load pressure increases to the valve setting the high flow (low pressure) pump is bypassed from P1 to tank allowing nearly all system power to be used for the high pressure pump.

(See graph for the pressure drop of the dumped flow). The system relief valve provides protection by limiting the maximum pressure in the system line.

Features

This is a self contained system including two replaceable cartridges with full adjustment through their respective ranges. Hardened working components give long, trouble-free life and single body reduces plumbing to a minimum.

Performance data

Ratings and specifications

Performance data is typical with fluid at 32 cST (150 SUS)	
Rated flow	low flow/high pressure (P2 150 L/min (40 USgpm) high flow/low pressure (P1)) 200 L/min (52 USgpm)
Max setting	350 bar (5000 psi)
Cartridge material	Working parts hardened & ground steel External surface zinc plated
Body material	Standard - steel
Mounting position	Unrestricted
Weight	3.15 kg (6.93 lbs)
Seal kit number	SK671 (Nitrile) SK671V (Viton)
Recommended filtration level	BS5540/4 Class 18/13 (25 micron nominal)
Operating Temp	-30°C to +90°C (-22° to 194° F)
Nominal viscosity range	5 to 500 cSt

Viton is a registered trademark of E.I. DuPont

Description

Two-pump unloader valves are used in systems with combinations of two (or more) pumps to give high flow at low pressure and high pressure at low flow. The valves bypass the flow from the low pressure pump(s) to tank at a pre-set pressure. This allows pump selection to give, for example, rapid advance and high power compaction with the most economic usage of system components and energy requirements.

Pressure drop

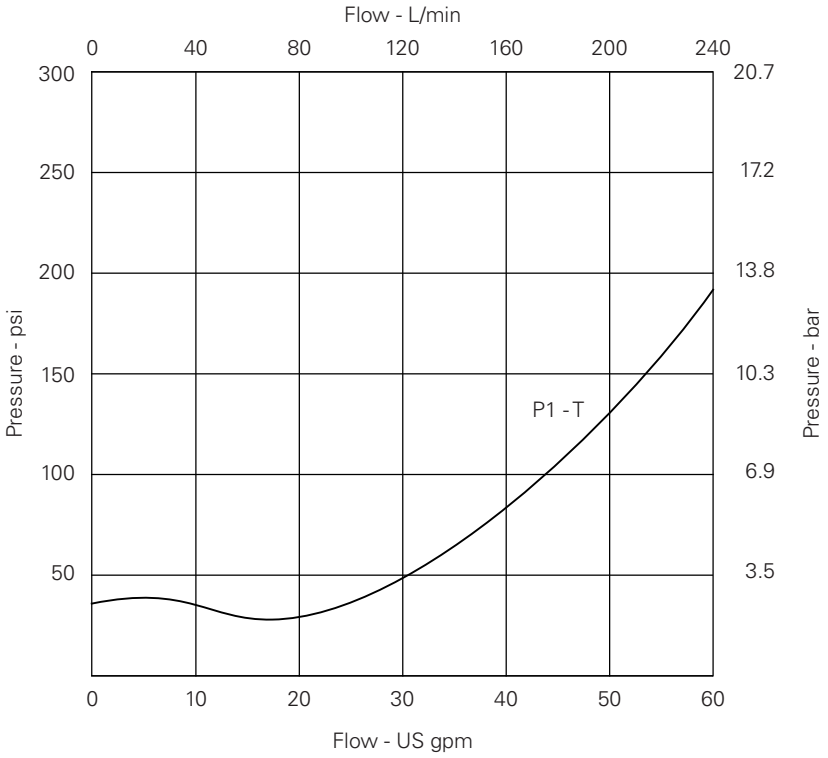

Where measurements are critical request certified drawings. We reserve the right to change specifications without notice.

1UL255 - Unloading valve

Up to 200 L/min (40 USgpm) • 350 bar (5000 psi)

Model code

1UL255 – P 6W-4W – 20 / 35 S

1 2 3 4 5 6

1 Basic code

1UL255 - Complete Valve

2 Adjustment means

P - Leakproof Screw Adjustment

3 Port sizes -

Code	System PI & T	P2	Housing number (steel)
6W-4W	3/4" BSPP	1/2" BSPP	BXP24051-6W-4W-S-377

4 Adjustable low pressure range

Note: Code based on pressure in bar.

20 - 30-210 bar. Std setting 100 bar

35 - 150-350 bar. Std setting 200 bar

5 Adjustable high pressure range

Note: Code based on pressure in bar.

17 - 35-175 bar. Std setting 105 bar

28 - 75-285 bar. Std setting 175 bar

35 - 114-350 bar. Std setting 280 bar

6 Seals

S - Nitrile (For use with most industrial hydraulic oils)

SV - Viton (For high temperature and most special fluid applications)

Dimensions

mm (inch)

Complete Valve

Basic Code: 1UL255

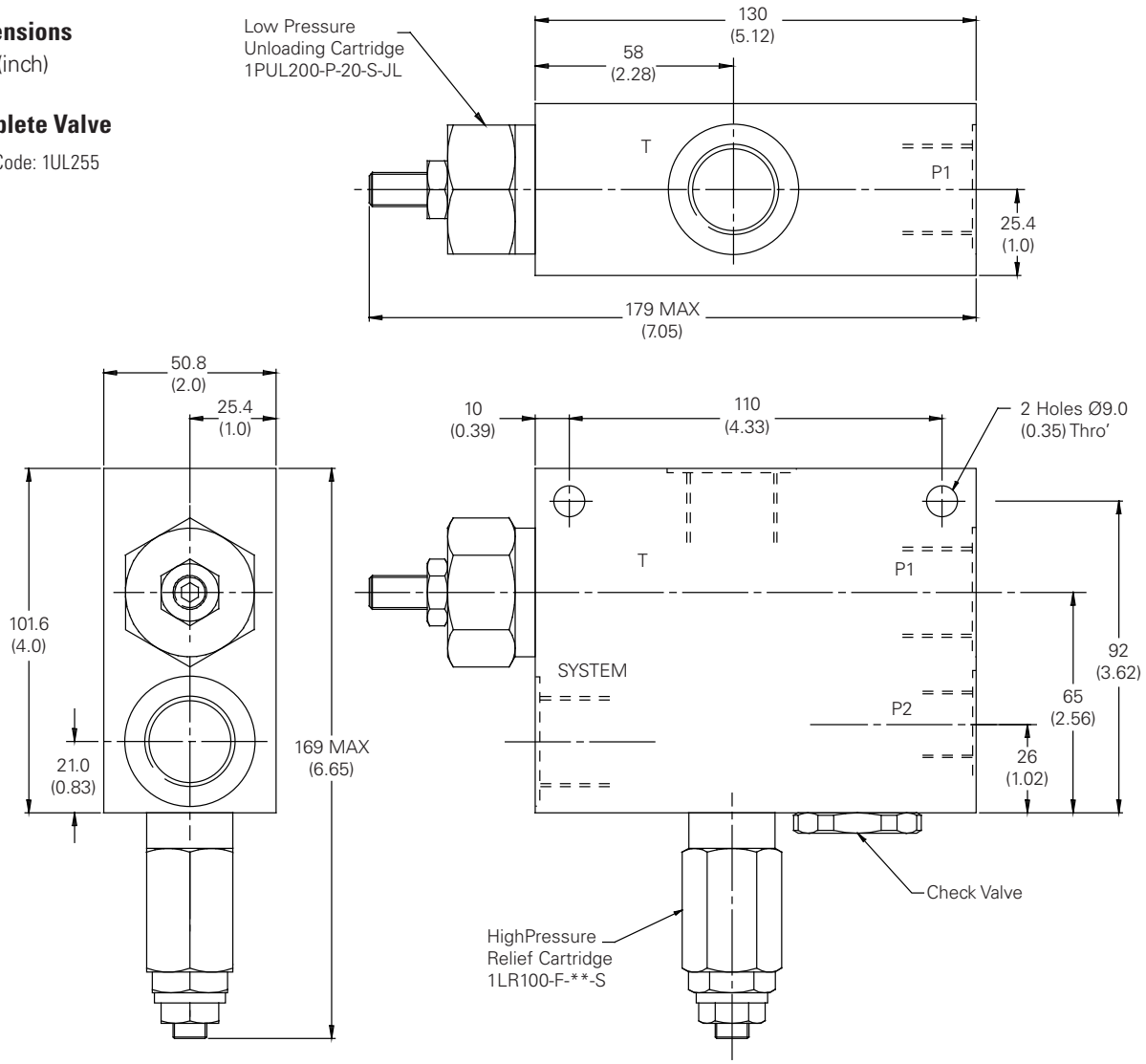

Where measurements are critical request certified drawings. We reserve the right to change specifications without notice.

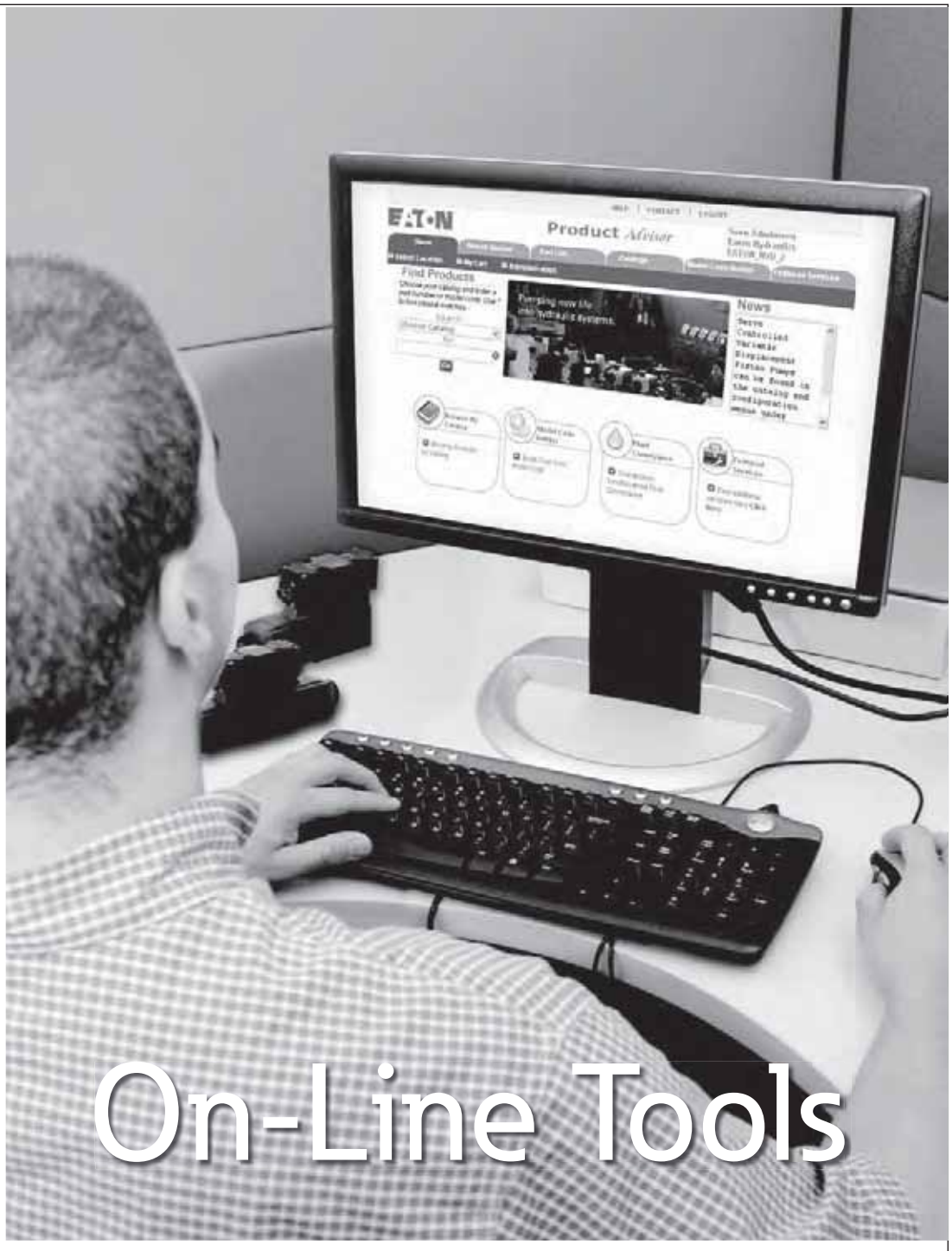

On-Line Tools

Ease of Doing Business

- Product Advisor (PVM, VMQ, DG-70, Proportional and Servo Valves)
- Expanded Eaton.com

EATON
Powering Business Worldwide

Where measurements are critical request certified drawings. We reserve the right to change specifications without notice.

We manufacture solutions

Designing hydraulic systems with Eaton-Vickers Cartridge Valves & Manifolds is a cost effective way of bringing your design into production well within the most demanding of production schedules. Minimizing the use of hoses, tubing and fittings will reduce production and assembly time significantly.

Features

- Compatible with Eaton H & T series spool valve motors, and most 2000 series disk valve motors
- Aluminum Manifolds Anodized Black
- Pre-set cartridges to your specifications
- 100% production tested assembly
- Wide range of settings available
- Intelligent model code
- Manifolds are available with out cartridge valves, or pre-assembled and tested to your specifications
- Manifolds and motors can be supplied as a pre-assembled package
- Dual counterbalance valve (with integral shuttle valve), dual pilot operated check valve and dual cross port relief valve packages are available

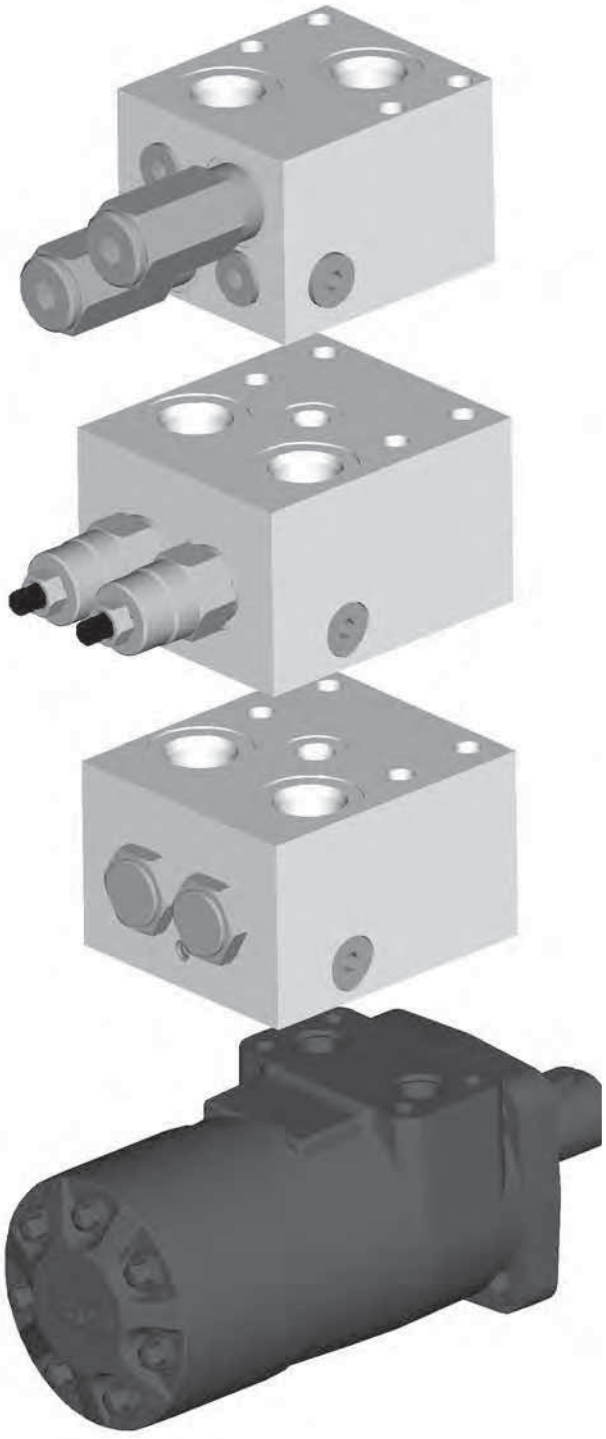

Eaton H Series Hydraulic Motor

Where measurements are critical request certified drawings. We reserve the right to change specifications without notice.

Dual cross-over relief package for H&T series motors

Cartridge valves & manifolds for spool valve motors

Dual crossover relief valve assembly

This valve assembly provides motor over-pressure protection in both directions of rotation, while supplying the return or lower pressure side of the motor with makeup oil. If closed center valving is used, an additional function is controlled braking.

Typical applications are vehicle propulsion and motor work circuits in which pressure limiting is required.

How to order

Complete pre-assembled packages are specified using the RV3A-10 model code. Option "A" must be selected for the cage seals, position 6 of the model code is "H". To order the manifold separately, without the two RV3A cartridges, order the part number 4997062-001.

Ratings and specifications

Rated flow	76 L/min(20USgpm)
Rated pressure	210 bar (3000psi)
Internal leakage (maximum)	less than 5 drops/min @ 85% of nominal setting
Manifold sub-assembly only	4997060
Installation kit (includes cap screws, washers and o-rings)	02-372492

For detailed specifications refer to the RV3A-10 data sheet on page E-210

Functional symbol

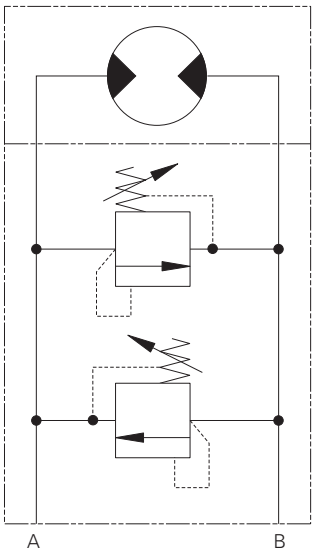

Dimensions

mm (inch)

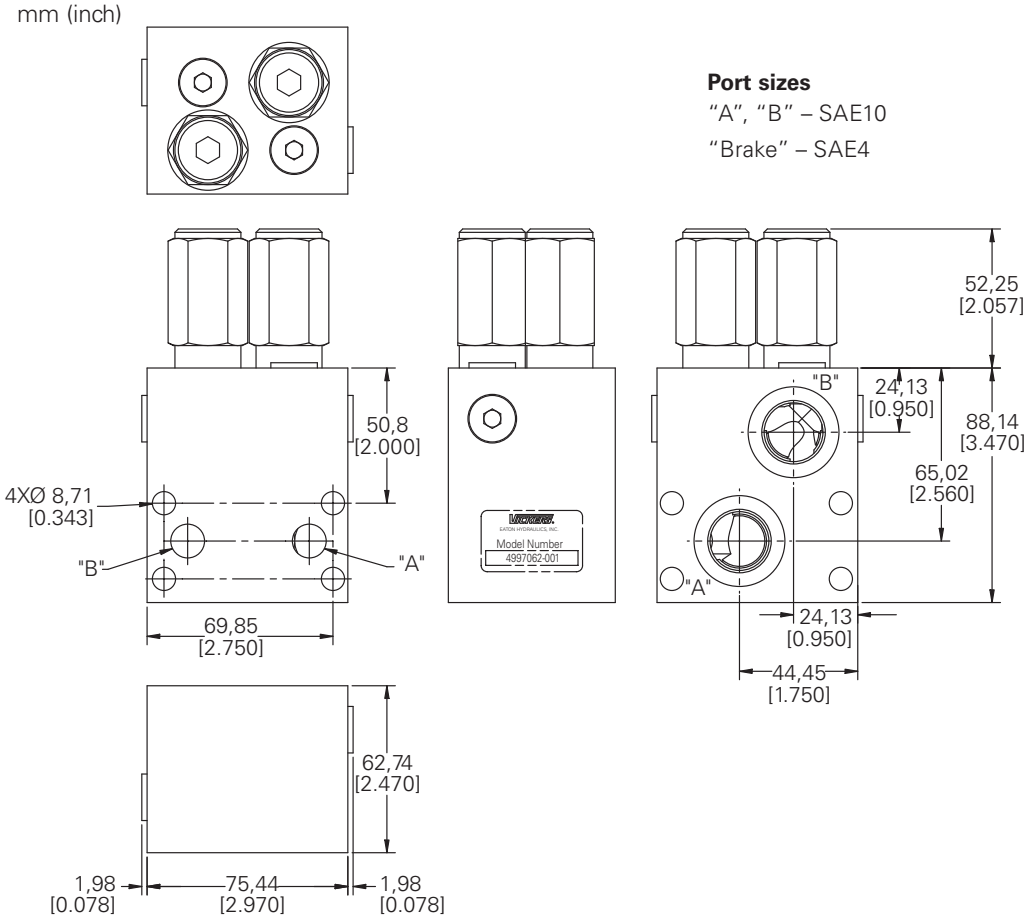

Port sizes

"A", "B" – SAE10

"Brake" – SAE4

Where measurements are critical request certified drawings. We reserve the right to change specifications without notice.

Dual crossover relief valve assembly

This valve assembly provides motor over-pressure protection in both directions of rotation, while supplying the return or lower pressure side of the motor with makeup oil. If closed center valving is used, an additional function is controlled braking.

Typical applications are vehicle propulsion and motor work circuits in which pressure limiting is required.

How to order

Complete pre-assembled packages are specified using the RV3A-10 model code. Option "A" must be selected for the cage seals, position 6 of the model code is "2K".

To order the manifold separately, without the two RV3A cartridges, order 4997060-001

Ratings and specifications

Rated flow	76 L/min(20USgpm)
Rated pressure	210 bar (3000psi)
Internal leakage (maximum)	less than 5 drops/min @ 85% of nominal setting
Manifold sub-assembly only	4997060-001
Installation kit (includes cap screws, washers and o-rings)	02-372492

For detailed specifications refer to the RV3A-10 data sheet on page E-14

Functional symbol

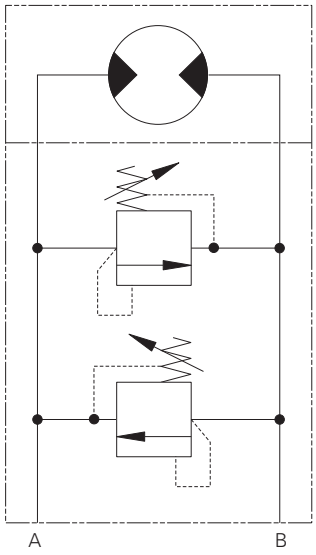

Dimensions

mm (inch)

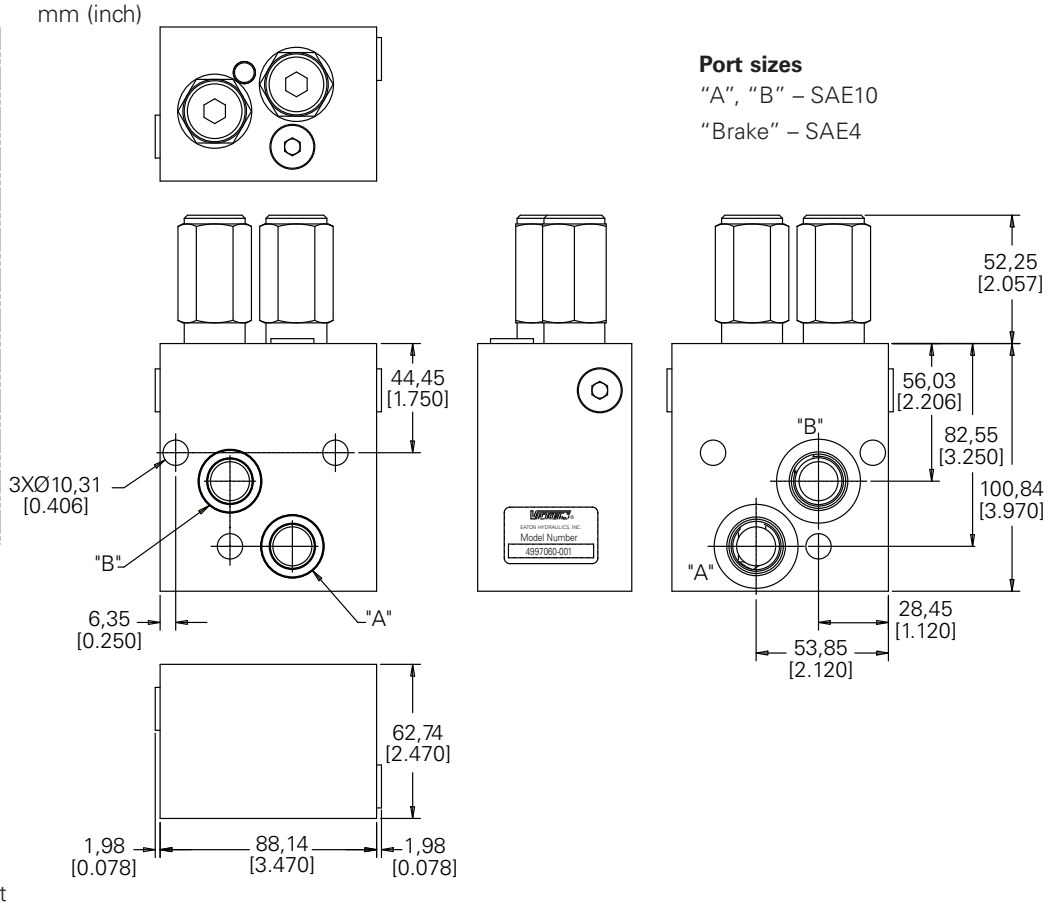

Port sizes

"A", "B" – SAE10

"Brake" – SAE4

⚠ Warning

This manifold package may not be suitable for application with all 2000 series motors - please check installation dimensions carefully.

Where measurements are critical request certified drawings. We reserve the right to change specifications without notice.

1CESHHT35/1CEESHHT35 - Motor mounted valves

H & T mounting pattern single and dual overcenter valve with brake release shuttle

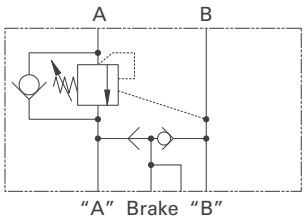

1CESHHT35*A

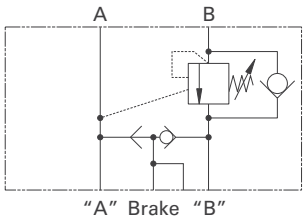

1CESHHT35*B

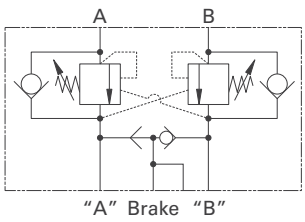

1CEESHHT35

Description

Overcenter Valves give static and dynamic control of loads by regulating the flow into and out of hydraulic actuators. When installed close to or within an actuator, the overcenter valve will stop runaway in the event of hose burst and if open center directional control valves are used, will allow thermal expansion relief of the hydraulic fluid.

These dual overcenter valves also contain a brake release shuttle valve which ensures that pressure is applied to a brake release circuit regardless of whether pressure is applied to ports "A" or "B". These multifunction valves are normally used for the static and dynamic control of systems using motors or semi-rotaryactuators.

Operation

The check section allows free flow into the actuator then holds and locks the load against movement. The pilot assisted relief valve section will give controlled movement when pilot pressure is applied. The relief section is normally set to open at a pressure at least 1.3 times the maximum load induced pressure but the pressure required to open the valve and allow movement depends on the pilot ratio of the valve. For optimization of load control and energy usage, a choice of pilot ratios is available.

The pressure required to open the valve and start actuator movement can be calculated as follows:

Pilot Pressure =

$$\frac{\text{(Relief Setting) - (Load Pressure)}}{\text{Pilot Ratio}}$$

Pilot ratios

2.5:1 Best suited for extremely unstable applications such as long booms or flexible frameworks.

5:1 Best suited for applications where load varies (Standard) and machine structure can induce instability

10:1 Best suited for applications where the load remains relatively constant.

Performance data

Ratings and specifications

Figures based on: Oil Temp = 40°C Viscosity = 32 cSt (150 SUS)			
Rated flow			30 L/min (8 USgpm)
Max setting			Max load induced Pressure: 270 bar (4000 psi) Relief setting: 350 bar (5000 psi)
Cartridge material			Working parts hardened & ground steel External surface zinc plated
Body material			Standard aluminium (up to 210 bar*) Steel (up to 350 bar)
Mounting position			Unrestricted
Cavity Number			A6610 (See section M)
Torque cartridge into cavity			45 Nm (33 ibs ft)
Weight (inc cartridges)		1CESHHT35 1CEESHHT35	2.29 kg (5.04 lbs) 2.34 kg (5.15 lbs)
Seal kit number	1CESHHT35 1CEESHHT35	9900828-000 (Buna-N) 9900828-000 (Buna-N)	9900829-000 (Viton) 9900829-000 (Viton)
Recommended filtration level			BS5540/4 Class 18/13 (25 micron nominal)
Operating Temp			-30°C to +90°C (-22° to 194°F)
Leakage			0.3 milliL/min nominal (5 dpm)
Nominal viscosity range			5 to 500 cSt
Installation Kit (includes cap screws, washers, and o-rings)			9900834-000 (Buna-N) 9900835-000 (Viton)

Where measurements are critical request certified drawings. We reserve the right to change specifications without notice.

1CESHHT35/1CEESHHT35 - Motor mounted valves

H & T mounting pattern single and dual overcenter valve with brake release shuttle

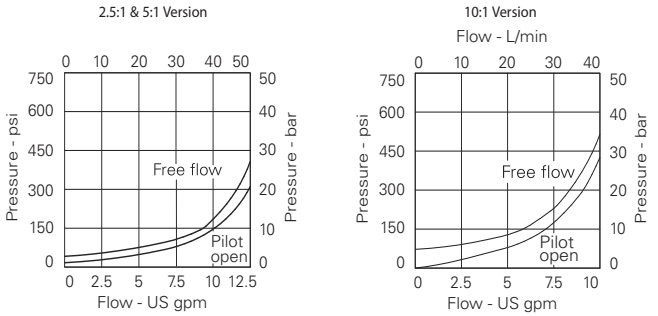

1CE*SHHT35- F - A 10H - AG - 35 0 - 35 0 - S - 5

1 2 3 4 5 6 7 8 9 10 11

1 Basic code

1CEESHHT35 – Double Cartridge and Body
1CESHHT35*A – Single overcenter in line A-"A"
1CESHHT35*B – Single overcenter in line B-"B"

2 Adjustment means

F – Screw Adjustment

3 Housing material

A – Aluminum
S – Steel

4

	Port size	Dual housing number		
Code	**"A" & "B"**	**Brake**	**Aluminum**	**Steel**
4W	1/2" BSP	1/4" BSP	6025216-001	6025216-003
10H	SAE 10	SAE 4	6025216-002	
10T	SAE 10	SAE 4		6025216-004

5 Port acted upon

A – A Port
B – B Port
AB – A & B Ports (dual)

6 Pressure range (cart A)

Note: Code Based on pressure in bar.
20 – (2.5:1 and 5:1): 70-210 bar. Std setting 100 bar. (10:1): 100-210 bar. Std setting 100 bar.
35 – (2.5:1 and 5:1): 100-350 bar. Std setting 210 bar. (10:1): 120-350 bar. Std setting 210 bar.

7 Pressure setting (cart A)

0 – Std factory setting
1500 – 1500 psi

8 Pressure range (cart B)

Note: Code Based on pressure in bar.
20 – (2.5:1 and 5:1): 70-210 bar. Std setting 100 bar. (10:1): 100-210 bar. Std setting 100 bar.
35 – (2.5:1 and 5:1): 100-350 bar. Std setting 210 bar. (10:1): 120-350 bar. Std setting 210 bar.

9 Pressure setting (cart B)

0 – Std factory setting
1500 – 1500 psi

10 Seals

S – Buna-N
SV – VitoN

11 Pilot ratio

2 – 2.5:1
5 – 5:1
10 – 10:1

Cavity plug part number

Nitrile
AXP13032-01-N
AXP13032-01-V

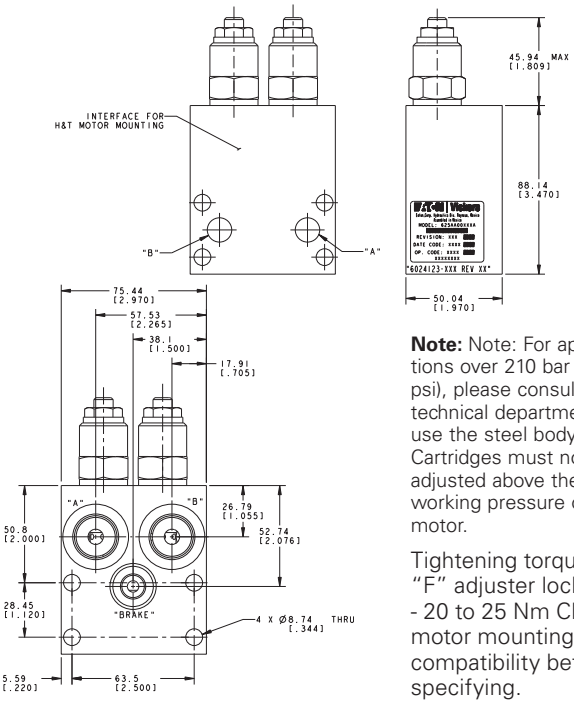

Note: Note: For applications over 210 bar (3000 psi), please consult our technical department or use the steel body option. Cartridges must not be adjusted above the safe working pressure of the motor.

Tightening torque of "F" adjuster locknut - 20 to 25 Nm Check motor mounting compatibility before specifying.

Where measurements are critical request certified drawings. We reserve the right to change specifications without notice.

1CESH2K95/1CEESH2K95 - Motor mounted valves

2k mounting pattern single and dual overcenter valves with brake release shuttle

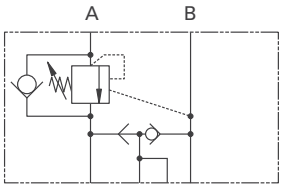

"A" Brake "B"

1CESH2K95*A

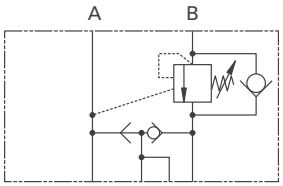

"A" Brake "B"

1CESH2K95*A

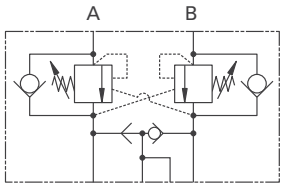

"A" Brake "B"

1CEESH2K95

Description

Overcenter Valves give static and dynamic control of loads by regulating the flow into and out of hydraulic actuators. When installed close to or within an actuator, the overcenter valve will stop runaway in the event of hose burst and if open center directional control valves are used, will allow thermal expansion relief of the hydraulic fluid.

These dual overcenter valves also contain a brake release shuttle valve which ensures that pressure is applied to a brake release circuit regardless of whether pressure is applied to ports "A" or "B". These multifunction valves are normally used for the static and dynamic control of systems using motors or semi-rotary actuators.

Operation

The check section allows free flow into the actuator then holds and locks the load against movement. The pilot assisted relief valve section will give controlled movement when pilot pressure is applied. The relief section is normally set to open at a pressure at least 1.3 times the maximum load induced pressure but the pressure required to open the valve and allow movement depends on the pilot ratio of the valve. For optimization of load control and energy usage, a choice of pilot ratios is available.

The pressure required to open the valve and start actuator movement can be calculated as follows:

$$\text{Pilot Pressure} = \frac{\text{(Relief Setting) - (Load Pressure)}}{\text{Pilot Ratio}}$$

Pilot Ratios

4:1 Best suited for applications where load varies and machine structure can induce instability

8:1 Best suited for applications where the load remains relatively constant.

Other ratios available upon request

Performance data

Ratings and specifications

Figures based on: Oil Temp = 40°C Viscosity = 32 cSt (150 SUS)			
Rated flow			90 L/min (23 USgpm)
Max setting		Max load induced Pressure:	270 bar (4000 psi)
		Relief setting:	350 bar (5000 psi)
Cartridge material			Working parts hardened & ground steel External surface zinc plated
Body material			Standard aluminium (up to 210 bar*) Steel (up to 350 bar)
Mounting position			Unrestricted
Cavity Number			A12336 (See section M)
Torque cartridge into cavity			60 Nm (44 ibs ft)
Weight (inc cartridges)		1CESH2K95	2.32 kg (5.10 lbs)
		1CEESH2K95	2.42 kg (5.32 lbs)
Seal kit number	1CESH2K95	9900826-000 (Buna-N)	9900827-000 (Viton)
	1CEESHT35	9900826-000 (Buna-N)	9900827-000 (Viton)
Recommended filtration level			BS5540/4 Class 18/13 (25 micron nominal)
Operating Temp			-30°C to +90°C (-22° to 194°F)
Leakage			0.3 milliL/min nominal (5 dpm)
Nominal viscosity range			5 to 500 cSt
Installation Kit (includes cap screws, washers, and o-rings)			9900830-000 (Buna-N) 9900831-000 (Viton)

Where measurements are critical request certified drawings. We reserve the right to change specifications without notice.

1CESH2K95/1CEESH2K95 - Motor mounted valves

2K Mounting pattern single and dual overcenter valves with brake release shuttle

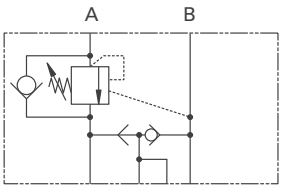

"A" Brake "B"

1CESH2K95*A

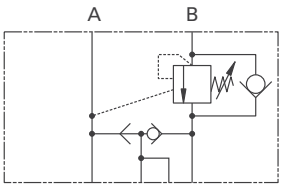

"A" Brake "B"

1CESH2K95*A

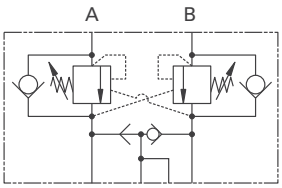

"A" Brake "B"

1CEESH2K95

Description

Overcenter Valves give static and dynamic control of loads by regulating the flow into and out of hydraulic actuators. When installed close to or within an actuator, the overcenter valve will stop runaway in the event of hose burst and if open center directional control valves are used, will allow thermal expansion relief of the hydraulic fluid.

These dual overcenter valves also contain a brake release shuttle valve which ensures that pressure is applied to a brake release circuit regardless of whether pressure is applied to ports "A" or "B". These multifunction valves are normally used for the static and dynamic control of systems using motors or semi-rotary actuators.

Operation

The check section allows free flow into the actuator then holds and locks the load against movement. The pilot assisted relief valve section will give controlled movement when pilot pressure is applied. The relief section is normally set to open at a pressure at least 1.3 times the maximum load induced pressure but the pressure required to open the valve and allow movement depends on the pilot ratio of the valve. For optimization of load control and energy usage, a choice of pilot ratios is available.

The pressure required to open the valve and start actuator movement can be calculated as follows:

$$\text{Pilot Pressure} = \frac{\text{(Relief Setting) - (Load Pressure)}}{\text{Pilot Ratio}}$$

Pilot ratios

4:1 Best suited for applications where load varies and machine structure can induce instability

8:1 Best suited for applications where the load remains relatively constant.

Other ratios available upon request

Performance data

Ratings and specifications

Figures based on: Oil Temp = 40°C Viscosity = 32 cSt (150 SUS)			
Rated flow			90 L/min (23 USgpm)
Max setting		Max load induced Pressure:	270 bar (4000 psi)
		Relief setting:	350 bar (5000 psi)
Cartridge material			Working parts hardened & ground steel External surface zinc plated
Body material			Standard aluminium (up to 210 bar*) Steel (up to 350 bar)
Mounting position			Unrestricted
Cavity Number			A12336 (See section M)
Torque cartridge into cavity			60 Nm (44 ibs ft)
Weight (inc cartridges)		1CESH2K95	2.32 kg (5.10 lbs)
		1CEESH2K95	2.42 kg (5.32 lbs)
Seal kit number	1CESH2K95	9900834-000(Buna-N)	9900835-000 (Viton)
	1CEESHT35	9900836-000 (Buna-N)	9900837-000 (Viton)
Recommended filtration level			BS5540/4 Class 18/13 (25 micron nominal)
Operating Temp			-30°C to +90°C (-22° to 194°F)
Leakage			0.3 milliL/min nominal (5 dpm)
Nominal viscosity range			5 to 500 cSt
Installation Kit (includes cap screws, washers, and o-rings)			9900828-000 (Buna-N) 9900829-000 (Viton)

Where measurements are critical request certified drawings. We reserve the right to change specifications without notice.

1CLLROMP150 - Motor mounted relief

150 L/min (40 USgpm) 350 bar (5000 psi)

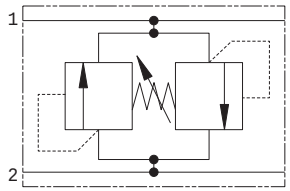

Operation

Pressure acts over one of two differential areas forcing the poppet back allowing relief flow to the other port. This being a single cartridge is ideal for mounting on to a motor in a special housing.

Features

Single cartridge relieving in both directions cutting down space requirements, giving full adjustment through its range on both pressures at the same time.

Performance data

Ratings and specifications

Figures based on: Oil Temp = 40°C Viscosity = 32 cSt (150 SUS)	
Rated Flow	150 L/min (40 USgpm)
Max Setting	350 bar (5000 psi)
Cartridge Material	Working parts hardened and ground steel. External steel surfaces black oxide.
Body Material	Standard aluminium (up to 210 bar*) Add Suffix '377' for steel option
Mounting Position	Unrestricted
Cavity Number	A878 (See Section M)
Torque Cartridge into Cavity	60 Nm (44 lbs ft)
Weight	1.46 kg (3.21 lbs)
Seal Kit Number	SK1280 (Nitrile) SK1280V (Viton)
Recommended Filtration Level	BS5540/4 Class 18/13 (25 micron nominal)
Operating Temp	-30°C to +90°C (-22° to 194°F)
Leakage	5 milliL/min
Nominal Viscosity Range	5 to 500 cSt

Description

This is a direct acting bi-directional relief valve designed to protect both lines in a circuit from over pressurization by relieving oil to the other line. Ideal for use with motors or directional valves as a emergency relief. Differential area, fast acting, poppet valve.

Pressure drop

Cartridge only

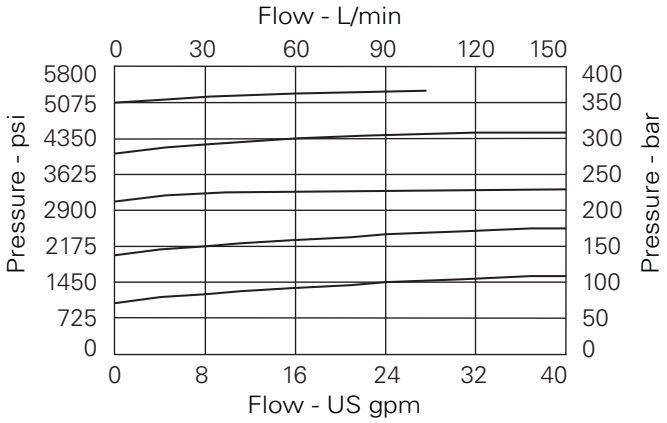

K

Where measurements are critical request certified drawings. We reserve the right to change specifications without notice.

1CLLROMP150 - Motor mounted relief

150 L/min (40 USgpm) 350 bar (5000 psi)

Model code

1CLLROMP150 – F 4W – 35 S BK

1 2 3 4 5 6

1 Basic code

1CLLROMP150 - Cartridge and Body

2 Adjustment means

F - Screw Adjustment

3 Port size

Code	Port size	Housing number
4W	1/2" BSP	AXP24058-4W-S

4 Adjustable pressure range

Note: Code based on pressure in bar.

35 - 114-350 bar. Std setting 280 bar*

Std setting made at 14 L/min

* Cartridges must not be adjusted above the safe working pressure of the motor

5 Seals

S - Nitrile
(For use with most industrial hydraulic oils)
SV - Viton
(For high temperature and most special fluid applications)

6 Mounting

BK - Bolt Kit

Dimensions

mm (inch)

Tightening torque of "F" adjuster locknut - 20 to 25 Nm

Notes: For applications over 210 bar (3000 psi), please consult our technical department or use the steel body option.

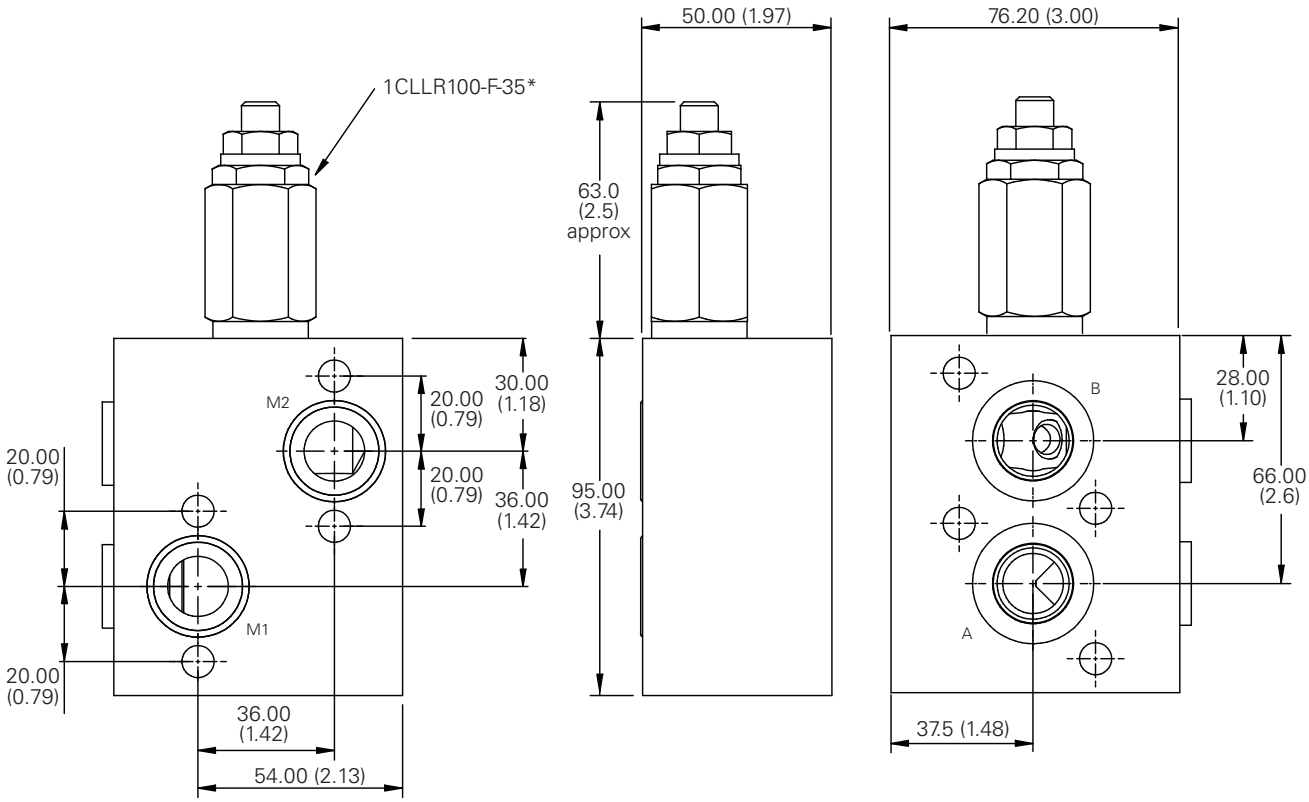

Where measurements are critical request certified drawings. We reserve the right to change specifications without notice.

1CLLROMS150 - Motor mounted relief

150 L/min (40 USgpm) 350 bar (5000 psi)

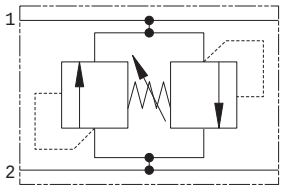

Operation

Pressure acts over one of two differential areas forcing the poppet back allowing relief flow to the other port. This being a single cartridge is ideal for mounting on to a motor in a special housing.

Features

Single cartridge relieving in both directions cutting down space requirements, giving full adjustment through its range on both pressures at the same time.

Performance data

Ratings and specifications

Figures based on: Oil Temp = 40°C Viscosity = 32 cSt (150 SUS)	
Rated Flow	150 L/min (40 USgpm)
Max Setting	350 bar (5000 psi)
Cartridge Material	Working parts hardened and ground steel. External steel surfaces black oxide.
Body Material	Standard aluminium (up to 210 bar*) Add Suffix '377' for steel option
Mounting Position	Unrestricted
Cavity Number	A878 (See Section M)
Torque Cartridge into Cavity	60 Nm (44 lbs ft)
Weight	1.46 kg (3.21 lbs)
Seal Kit Number	SK1280 (Nitrile) SK1280V (Viton)
Recommended Filtration Level	BS5540/4 Class 18/13 (25 micron nominal)
Operating Temp	-30°C to +90°C (-22° to 194°F)
Leakage	5 milliL/min
Nominal Viscosity Range	5 to 500 cSt

Description

This is a direct acting bi-directional relief valve designed to protect both lines in a circuit from over pressurization by relieving oil to the other line. Ideal for use with motors or directional valves as a emergency relief. Differential area, fast acting, poppet valve.

Pressure drop

Cartridge only

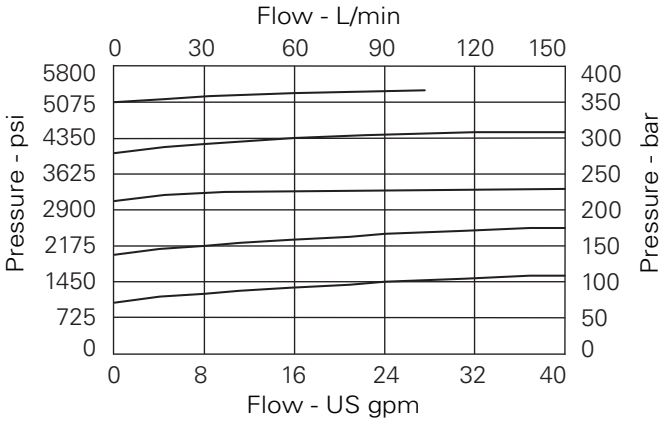

K

Where measurements are critical request certified drawings. We reserve the right to change specifications without notice.

1CLLROMS150 - Motor mounted relief

150 L/min (40 USgpm) 350 bar (5000 psi)

Model code

1CLLROMS150 – F 4W – 35 S BK

1 2 3 4 5 6

1 Basic code

1CLLROMS150 - Cartridge and Body

2 Adjustment means

F - Screw Adjustment

3 Port size

Code	Port size	Housing number
4W	1/2" BSP	AXP24059-4W-S

4 Adjustable pressure range

Note: Code based on pressure in bar.
35 - 114-350 bar. Std setting 280 bar*
Std setting made at 14 L/min
* Cartridges must not be adjusted above the safe working pressure of the motor

5 Seals

S - Nitrile
(For use with most industrial hydraulic oils)
SV - Viton
(For high temperature and most special fluid applications)

6 Mounting

BK - Bolt Kit

Dimensions

mm (inch)

Tightening torque of "F" adjuster locknut - 20 to 25 Nm

Note: For applications over 210 bar (3000 psi), please consult our technical department or use the steel body option.

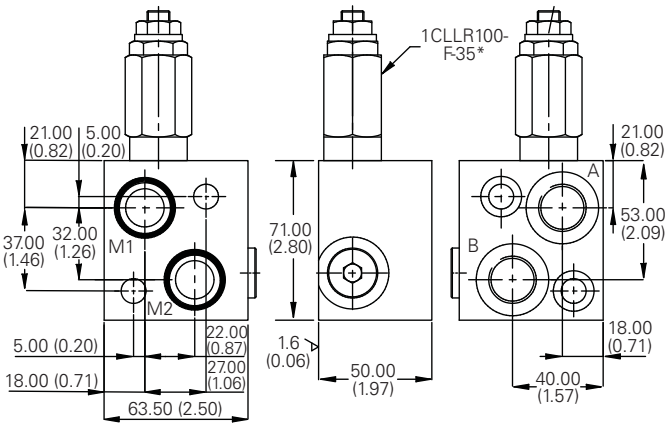

Where measurements are critical request certified drawings. We reserve the right to change specifications without notice.

1CEOMP35/1CEEOMP35 - Motor mounted valves

OMP mounting pattern single and dual overcenter valves

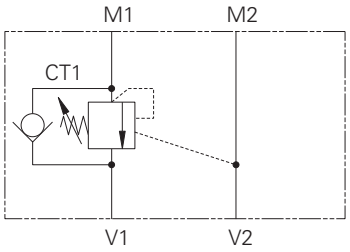

1CEOMP35-1

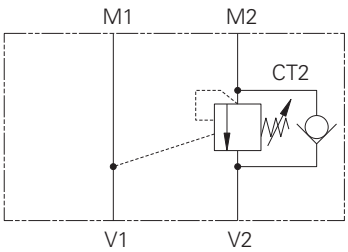

1CEOMP35-2

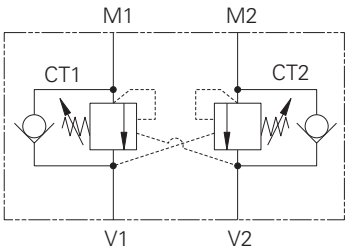

1CEEOMP35

Description

Overcenter valves give static and dynamic control of loads by regulating the flow into and out of hydraulic actuators. When installed close to or within an actuator, the overcenter valve will stop runaway in the event of hose burst and if open center directional control valves are used, will allow thermal expansion relief of the hydraulic fluid.

The overcenter cartridge is ideal for mounting directly into a cavity machined in the body of the cylinder, motor or rotary actuator. The cartridge can also be mounted directly to the ports via a specifically machined body as part of a Hydraulic Integrated Circuit or single unit, or contained within one of our standard line bodies.

Single overcenter valves are normally used when the load is unidirectional, for example an aerial platform or crane and dual overcenter valves are used for controlling loads in both directional for motor applications or for cylinders going over center.

Operation

The check section allows free flow into the actuator then holds and locks the load against movement. The pilot assisted relief valve section will give controlled movement when pilot pressure is applied. The relief section is normally set to open at a pressure at least 1.3 times the maximum load induced pressure but the pressure required to open the valve and allow movement depends on the pilot ratio of the valve. For optimization of load control and energy usage, a choice of pilot ratios is available.

The pressure required to open the valve and start actuator movement can be calculated as follows:

Pilot Pressure =

$$\frac{\text{(Relief Setting) - (Load Pressure)}}{\text{Pilot Ratio}}$$

Pilot Ratios

2.5:1 Best suited for extremely unstable applications such as long booms or flexible frameworks.

5:1 Best suited for applications where load varies (Standard) and machine structure can induce instability

10:1 Best suited for applications where the load remains relatively constant.

Performance data

Ratings and specifications

Figures based on: Oil Temp = 40°C Viscosity = 32 cSt (150 SUS)			
Rated flow			30 L/min (8 USgpm)
Max setting			Max load induced Pressure: 270 bar (4000 psi) Relief setting: 350 bar (5000 psi)
Cartridge material			Working parts hardened & ground steel External surface zinc plated
Body material			Standard aluminium (up to 210 bar*) Add suffix '377' for steel option
Mounting position			Unrestricted
Cavity Number			A6610 (See section M)
Torque cartridge into cavity			45 Nm (33 ibs ft)
Weight (inc cartridges)			1CEOMP35 1.6 kg (3.52 lbs) 1CEEOMP35 1.66 kg (3.65 lbs)
Seal kit number	1CEOMP35	SK1285 (Nitrile)	SK1285V (Viton)
	1CEEOMP35	SK1284 (Nitrile)	SK1284V (Viton)
Recommended filtration level			BS5540/4 Class 18/13 (25 micron nominal)
Operating Temp			-30°C to +90°C (-22° to 194°F)
Leakage			0.3 milliL/min nominal (5 dpm)
Nominal viscosity range			5 to 500 cSt

Where measurements are critical request certified drawings. We reserve the right to change specifications without notice.

1CEHT35/1CEEHT35 - Motor mounted valves

H & T Mounting pattern single and dual overcenter valves

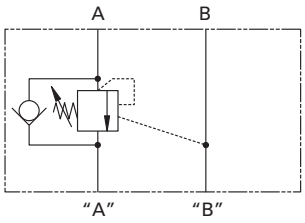

1CEHT35*A

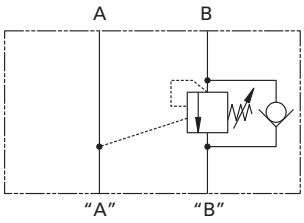

1CEHT35*B

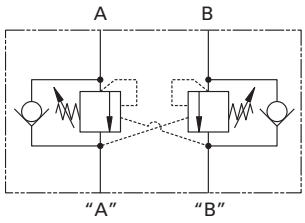

1CEEHT35

Description

Overcenter valves give static and dynamic control of loads by regulating the flow into and out of hydraulic actuators. When installed close to or within an actuator, the overcenter valve will stop runaway in the event of hose burst and if open center directional control valves are used, will allow thermal expansion relief of the hydraulic fluid. The overcenter cartridge is ideal for mounting directly into a cavity machined in the body of the cylinder, motor or rotary actuator.

The cartridge can also be mounted directly to the ports via a specifically machined body as part of a Hydraulic Integrated Circuit or single unit, or contained within one of our standard line bodies.

Single overcenter valves are normally used when the load is unidirectional, for example an aerial platform or crane and dual overcenter valves are used for controlling loads in both directional for motor applications or for cylinders going over center.

Operation

The check section allows free flow into the actuator then holds and locks the load against movement. The pilot assisted relief valve section will give controlled movement when pilot pressure is applied. The relief section is normally set to open at a pressure at least 1.3 times the maximum load induced pressure but the pressure required to open the valve and allow movement depends on the pilot ratio of the valve. For optimization of load control and energy usage, a choice of pilot ratios is available.

The pressure required to open the valve and start actuator movement can be calculated as follows:

$$\text{Pilot Pressure} = \frac{\text{(Relief Setting) - (Load Pressure)}}{\text{Pilot Ratio}}$$

Pilot Ratios

2.5:1 Best suited for extremely unstable applications such as long booms or flexible frameworks.

5:1 Best suited for applications where load varies (Standard) and machine structure can induce instability

10:1 Best suited for applications where the load remains relatively constant.

Performance data

Ratings and specifications

Figures based on: Oil Temp = 40°C Viscosity = 32 cSt (150 SUS)		
Rated flow		30 L/min (8 USgpm)
Max setting		Max load induced Pressure: 270 bar (4000 psi) Relief setting: 350 bar (5000 psi)
Cartridge material		Working parts hardened & ground steel External surface zinc plated
Body material		Standard aluminium (up to 210 bar*) Steel (up to 350 bar)
Mounting position		Unrestricted
Cavity Number		A6610 (See section M)
Torque cartridge into cavity		45 Nm (33 ibs ft)
Weight (inc cartridges)		1CEOMP35 1.6 kg (3.52 lbs) 1CEEOMP35 1.66 kg (3.65 lbs)
Seal kit number	1CEHT35 1CEEHT35	9900834-000 (Buna-N) 9900835-000 (Viton) 9900836-000 (Buna-N 9900837-000 (Viton)
Recommended filtration level		BS5540/4 Class 18/13 (25 micron nominal)
Operating Temp		-30°C to +90°C (-22° to 194°F)
Leakage		0.3 milliL/min nominal (5 dpm)
Nominal viscosity range		5 to 500 cSt
Installation Kit (includes cap screws, washers, and o-rings)		9900828-000 (Buna-N) 9900829-000 (Viton)

Where measurements are critical request certified drawings. We reserve the right to change specifications without notice.

1CEHT35/1CEEHT35 - Motor mounted valves

H & T Mounting pattern single and dual overcenter valves

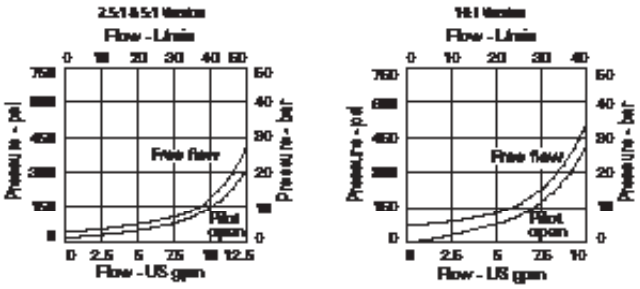

1CEEHT35	-	F	-	A	10H	-	AG	-	35	0	-	35	0	-	S	-	5
1		2		3	4		5		6	7		8	9		10		11

1 Basic code

1CEEHT35 - Double Cartridge and Body
1CEHT35* - ASingle overcenter in line A-"A"
1CEHT35* - BSingle overcenter in line B-"B"

2 Adjustment means

F – Screw Adjustment

3 Housing material

A – Aluminum
S – Steel

4

	Port size	Dual housing number	
Code	**"A" & "B"**	**Aluminum**	**Steel**
4W	1/2" BSP	6024221-001	6024221-003
10H	SAE 10	6024221-002	
10T	SAE 10		6024221-04

5 Port acted upon

A – A Port
B – B Port
AB – A & B Ports (dual)

6 Pressure range (Cart A)

Note: Code Based on pressure in bar.
20 – (2.5:1 and 5:1): 70-210 bar. Std setting 100 bar.
(10:1): 100-210 bar. Std setting 100 bar.
3**5 –** (2.5:1 and 5:1): 100-350 bar. Std setting 210 bar.
(10:1): 120-350 bar. Std setting 210 bar.

7 Pressure setting (Cart A)

0 – Std factory setting
1500 – 1500 psi

8 Pressure range (Cart B)

Note: Code Based on pressure in bar.
20 – (2.5:1 and 5:1): 70-210 bar. Std setting 100 bar.
(10:1): 100-210 bar. Std setting 100 bar.
35 – (2.5:1 and 5:1): 100-350 bar. Std setting 210 bar.
(10:1): 120-350 bar. Std setting 210 bar.

9 Pressure setting (Cart B)

0 – Std factory setting
1500 – 1500 psi

10 Seals

S – Buna-N
SV – VitoN

11 Pilot ratio

4 – 4:1
8 – 8:1
10 – 8:1

Cavity plug part number

Nitrile
AXP13032-01-N
AXP13032-01-V

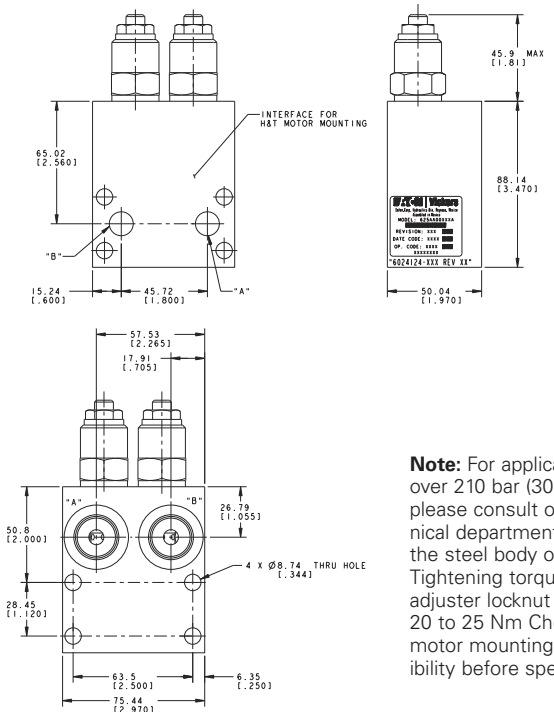

Note: For applications over 210 bar (3000 psi), please consult our technical department or use the steel body option. Tightening torque of "F" adjuster locknut - 20 to 25 Nm Check motor mounting compatibility before specifying.

Where measurements are critical request certified drawings. We reserve the right to change specifications without notice.

1CE2K95/1CEE2K95 - Motor mounted valves

2K Mounting pattern single and dual overcenter valves

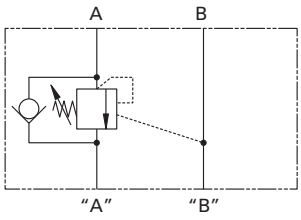

1CE2K95*A

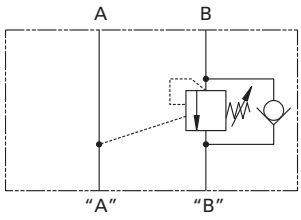

1CE2K95*B

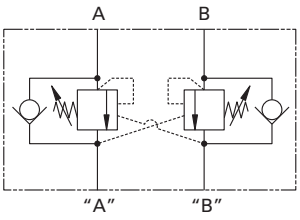

1CEE2K95

Description

Overcenter valves give static and dynamic control of loads by regulating the flow into and out of hydraulic actuators. When installed close to or within an actuator, the overcenter valve will stop runaway in the event of hose burst and if open center directional control valves are used, will allow thermal expansion relief of the hydraulic fluid.

The overcenter cartridge is ideal for mounting directly into a cavity machined in the body of the cylinder, motor or rotary actuator. The cartridge can also be mounted directly to the ports via a specifically machined body as part of a Hydraulic Integrated Circuit or single unit, or contained within one of our standard line bodies.

Single overcenter valves are normally used when the load is unidirectional, for example an aerial platform or crane and dual overcenter valves are used for controlling loads in both directional for motor applications or for cylinders going over center.

Operation

The check section allows free flow into the actuator then holds and locks the load against movement. The pilot assisted relief valve section will give controlled movement when pilot pressure is applied. The relief section is normally set to open at a pressure at least 1.3 times the maximum load induced pressure but the pressure required to open the valve and allow movement depends on the pilot ratio of the valve. For optimization of load control and energy usage, a choice of pilot ratios is available.

The pressure required to open the valve and start actuator movement can be calculated as follows:

$$\text{Pilot Pressure} = \frac{\text{(Relief Setting) - (Load Pressure)}}{\text{Pilot Ratio}}$$

Pilot Ratios

4:1 Best suited for applications where load varies and machine structure can induce instability

8:1 Best suited for applications where the load remains relatively constant.

Other ratios available upon request

Performance data

Ratings and specifications

Figures based on: Oil Temp = 40°C Viscosity = 32 cSt (150 SUS)		
Rated flow		90 L/min (23 USgpm)
Max setting		Max load induced Pressure: 270 bar (4000 psi) Relief setting: 350 bar (5000 psi)
Cartridge material		Working parts hardened & ground steel External surface zinc plated
Body material		Standard aluminium (up to 210 bar*) Steel (up to 350 bar)
Mounting position		Unrestricted
Cavity Number		A12336 (See section M)
Torque cartridge into cavity		60 Nm (44 ibs ft)
Weight (inc cartridges)		1CE2K95 2.16 kg (4.75 lbs) 1CEE2K95 2.26 kg (4.97 lbs)
Seal kit number	1CE2K95	9900826-000 (Buna-N) 9900827-000 (Viton)
	1CEE2K95	9900826-000 (Buna-N) 9900827-000 (Viton)
Recommended filtration level		BS5540/4 Class 18/13 (25 micron nominal)
Operating Temp		-30°C to +90°C (-22° to 194°F)
Leakage		0.3 milliL/min nominal (5 dpm)
Nominal viscosity range		5 to 500 cSt
Installation Kit (includes cap screws, washers, and o-rings)		9900830-000 (Buna-N) 9900831-000 (Viton)

Where measurements are critical request certified drawings. We reserve the right to change specifications without notice.

1CE2K95/1CEE2K95 - Motor mounted valves

2K Mounting pattern single and dual overcenter valves

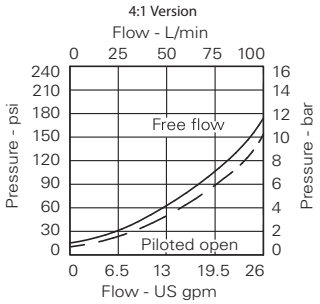

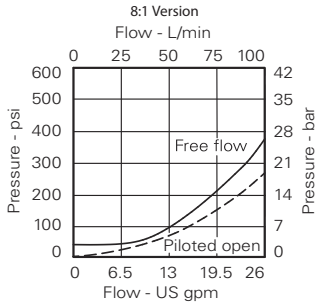

1CEE2K95 -	F	- A	10H	- AG -	35	0 -	35	0 -	S	- 5
1	2	3	4	5	6	7	8	9	10	11

1 Basic code

1CEE2K95 Double Cartridge and Body
1CE2K95* A Single overcenter in line A-"A"
1CE2K95* B Single overcenter in line B-"B"

2 Adjustment means

F – Screw Adjustment

3 Housing material

A – Aluminum
S – Steel

4

	Port size	Dual housing number	
Code	**"A" & "B"**	**Aluminum**	**Steel**
4W	1/2" BSP	6025185-001	6025185-003
10H	SAE 10	6025185-002	
10T	SAE 10		6025185-004

5 Port acted upon

A – A Port
B – B Port
AB – A & B Ports (dual)

6 Pressure range (cart A)

Note: Code Based on pressure in bar.
20 – 70-225 bar. Std setting 100 bar.
35 – 200-350 bar. Std setting 210 bar.

7 Pressure setting (cart A)

0 – Std factory setting
1500 – 1500 psi

8 Pressure range (cart B)

Note: Code Based on pressure in bar.
20 – 70-225 bar. Std setting 100 bar.
35 – 200-350 bar. Std setting 210 bar.

9 Pressure setting (cart B)

0 – Std factory setting
1500 – 1500 psi

10 Seals

S – Buna-N
SV – VitoN

11 Pilot ratio

4 – 4:1
8 – 8:1

Cavity plug part number
Nitrile
AXP14434-02-N
Viton
AXP14434-02-V

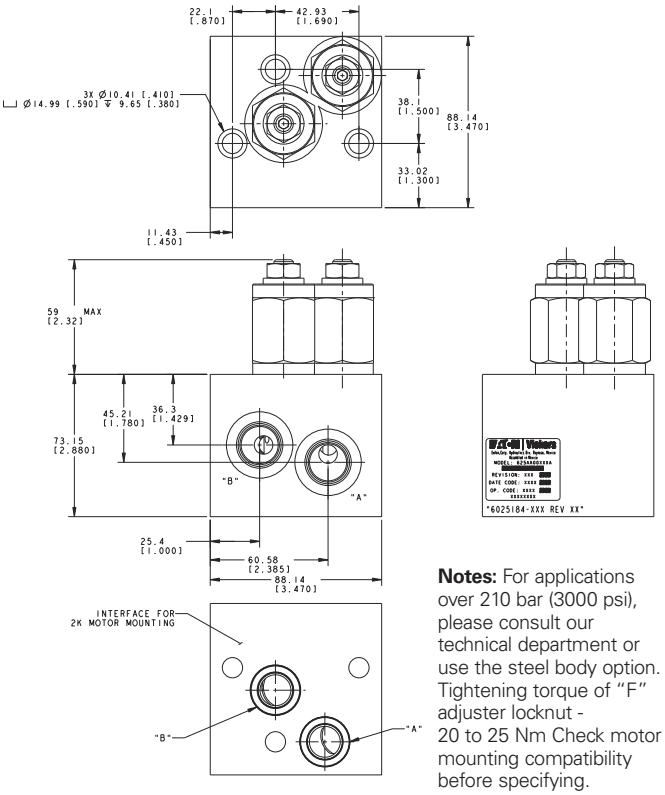

Notes: For applications over 210 bar (3000 psi), please consult our technical department or use the steel body option. Tightening torque of "F" adjuster locknut - 20 to 25 Nm Check motor mounting compatibility before specifying.

Where measurements are critical request certified drawings. We reserve the right to change specifications without notice.

1CEOMS95/1CEEOMS95 - Motor mounted valves

OMS Mounting pattern single and dual overcenter valves

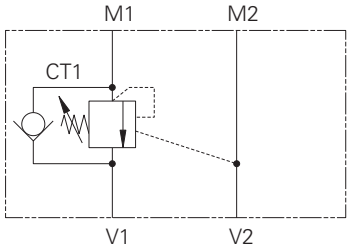

1CEOMS95-1

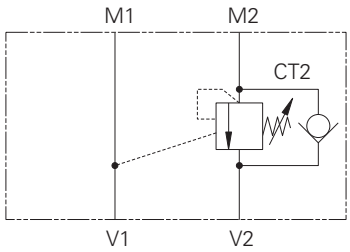

1CEOMS95-2

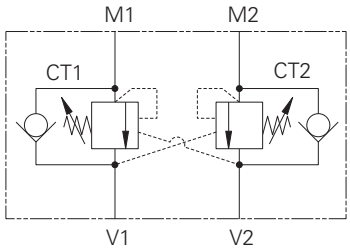

1CEEOMS95

Description

Overcenter valves give static and dynamic control of loads by regulating the flow into and out of hydraulic actuators. When installed close to or within an actuator, the overcenter valve will stop runaway in the event of hose burst and if open center directional control valves are used, will allow thermal expansion relief of the hydraulic fluid.

The overcenter cartridge is ideal for mounting directly into a cavity machined in the body of the cylinder, motor or rotary actuator. The cartridge can also be mounted directly to the ports via a specifically machined body as part of a Hydraulic Integrated Circuit or single unit, or contained within one of our standard line bodies.

Single overcenter valves are normally used when the load is unidirectional, for example an aerial platform or crane and dual overcenter valves are used for controlling loads in both directional for motor applications or for cylinders going over center.

Operation

The check section allows free flow into the actuator then holds and locks the load against movement. The pilot assisted relief valve section will give controlled movement when pilot pressure is applied. The relief section is normally set to open at a pressure at least 1.3 times the maximum load induced pressure but the pressure required to open the valve and allow movement depends on the pilot ratio of the valve. For optimization of load control and energy usage, a choice of pilot ratios is available.

The pressure required to open the valve and start actuator movement can be calculated as follows:

$$\text{Pilot Pressure} = \frac{\text{(Relief Setting) - (Load Pressure)}}{\text{Pilot Ratio}}$$

Pilot Ratios

4:1 Best suited for applications where load varies and machine structure can induce instability

8:1 Best suited for applications where the load remains relatively constant.

Other ratios available upon request

Performance data

Ratings and specifications

Figures based on: Oil Temp = 40°C Viscosity = 32 cSt (150 SUS)	
Rated flow	90 L/min (23 USgpm)
Max setting	Max load induced Pressure: 270 bar (4000 psi) Relief setting: 350 bar (5000 psi)
Cartridge material	Working parts hardened & ground steel External surface zinc plated
Body material	Standard aluminium (up to 210 bar*) Add suffix '377' for steel option
Mounting position	Unrestricted
Cavity Number	A12336 (See section M)
Torque cartridge into cavity	60 Nm (44 ibs ft)
Weight (inc cartridges)	1CEOMS95 2.16 kg (4.75 lbs) 1CEEOMS95 2.26 kg (4.97 lbs)
Seal kit number	1CEOMS95 SK1282 (Nitrile) SK1282V (Viton) 1CEEOMS95 SK795 (Nitrile) SK795V (Viton)
Recommended filtration level	BS5540/4 Class 18/13 (25 micron nominal)
Operating Temp	-30°C to +90°C (-22° to 194°F)
Leakage	0.3 milliL/min nominal (5 dpm)
Nominal viscosity range	5 to 500 cSt

K

Where measurements are critical request certified drawings. We reserve the right to change specifications without notice.

1CEOMP35/1CEEOMP35 - Motor mounted valves

OMP Mounting pattern single and dual overcenter valves

Pressure drop

2.5:1 & 5:1 Version

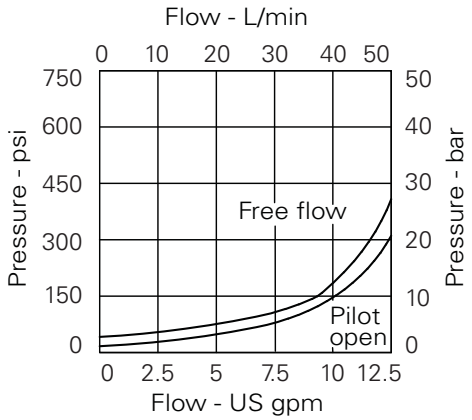

10:1 Version

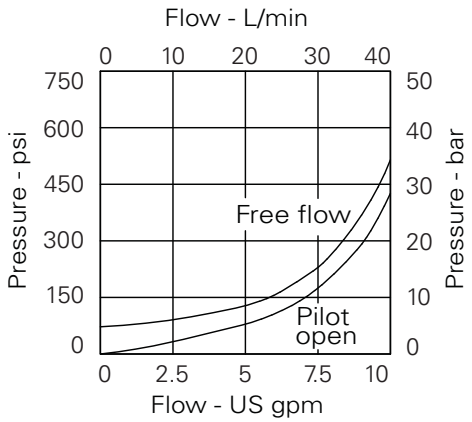

Model code

1CE*OMP35-* – F 4W – 35 S 5 BK

1 2 3 4 5 6 7

1 Basic code

1CEEOMP35 - Double Cartridge and Body
1CEOMP35-1 - Single overcenter in line V1-M1
1CEOMP35-2 - Single overcenter in line V2-M2

2 Adjustment means

F - Screw Adjustment

3 Port size

Code	Port size	Housing number
4W	1/2" BSPP	BXP24052-4W-S

4 Pressure range

Note: Code based on pressure in bar.
20 - (2.5:1 and 5:1): 70-210 bar. Std setting 100 bar
(10:1): 100-210 bar. Std setting 100 bar
35 - (2.5:1 and 5:1): 100-350 bar. Std setting 210 bar
(10:1): 120-350 bar. Std setting 210 bar
Std setting made at 4.8 L/min
* Cartridges must not be adjusted above the safe working pressure of the motor

5 Seals

S - Nitrile
(For use with most industrial hydraulic oils)
SV - Viton
(For high temperature and most special fluid applications)

6 Pilot ratio

2 - 2.5:1
5 - 5:1
10 - 10:1

7 Mounting

BK - Bolt Kit

Cavity plug part number

Nitrile
AXP13032-01-N

Viton
AXP13032-01-V

Dimensions

mm (inch)

Complete Valve 1/2" Ports

Basic Code: 1CEEOMP35

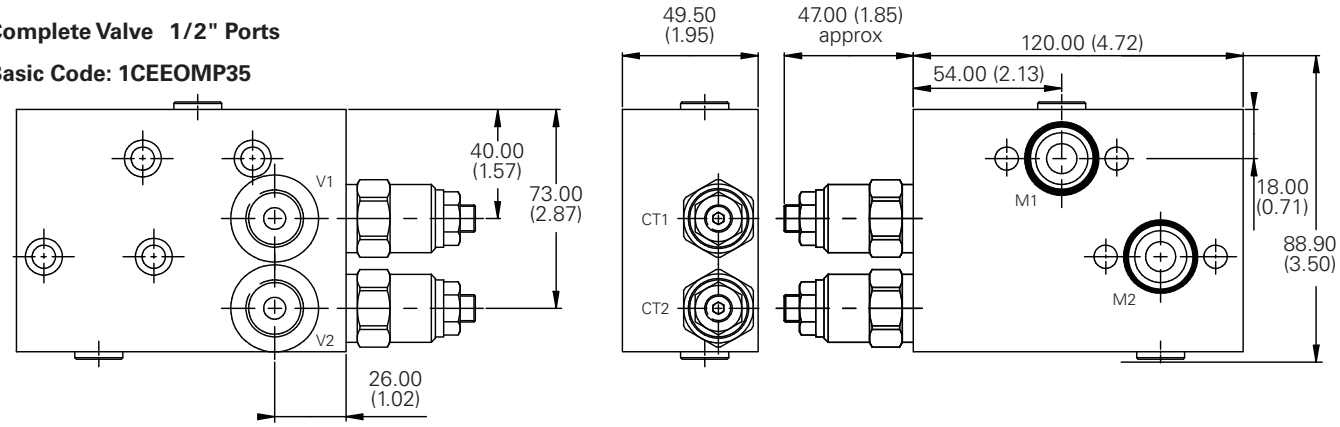

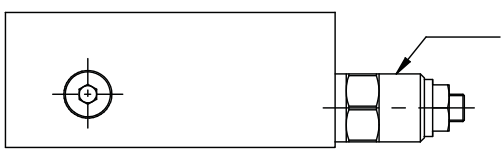

Note: For applications over 210 bar (3000 psi), please consult our technical department or use the steel body option.

Tightening torque of "F" adjuster locknut - 20 to 25 Nm

Check motor mounting compatibility before specifying.

Where measurements are critical request certified drawings. We reserve the right to change specifications without notice.

Pressure drop

4:1 Version

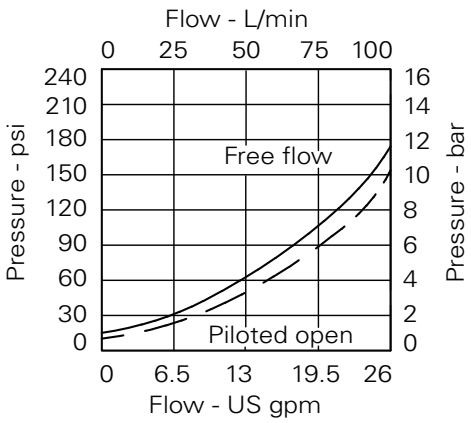

8:1 Version

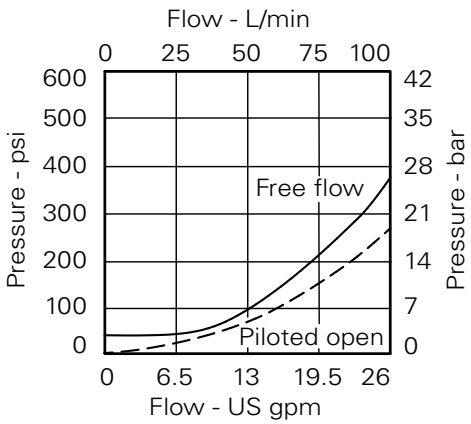

Model code

1CE*OMS95-* – F 4W – 35 S 4 BK

1 2 3 4 5 6 7

1 Basic code

1CEEOMS95 - Double Cartridge and Body
1CEOMS95-1 - Single overcenter in line V1-M1
1CEOMS95-2 - Single overcenter in line V2-M2

2 Adjustment means

F - Screw Adjustment

3 Port size

Code	V1 & V2	Brake	Housing number
4W	1/2" BSPP	1/4" BSPP	BXP24055-4W-S

4 Pressure range

Note: Code based on pressure in bar.

20 - 70-225 bar. Std setting 100 bar

35 - 200-350 bar. Std setting 210 bar

Std setting made at 4.8 L/min

* Cartridges must not be adjusted above the safe working pressure of the motor

5 Seals

S - Nitrile
(For use with most industrial hydraulic oils)
SV - Viton
(For high temperature and most special fluid applications)

6 Pilot ratio

4 - 4:1
8 - 8:1

7 Mounting

BK - Bolt Kit

Cavity plug part number

Nitrile
AXP14434-02-N

Viton
AXP14434-02-V

Dimensions

mm (inch)

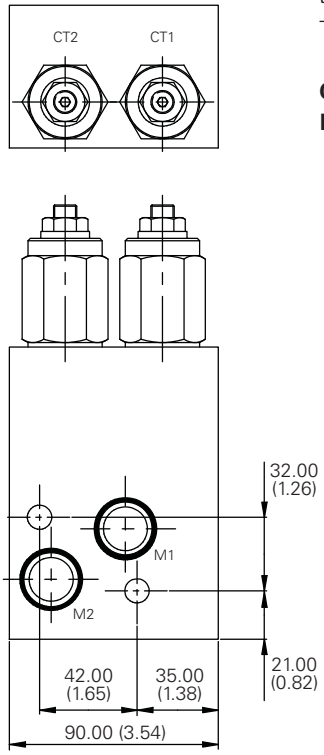

Complete Valve 1/2" Ports
Basic Code: 1CEEOMS95

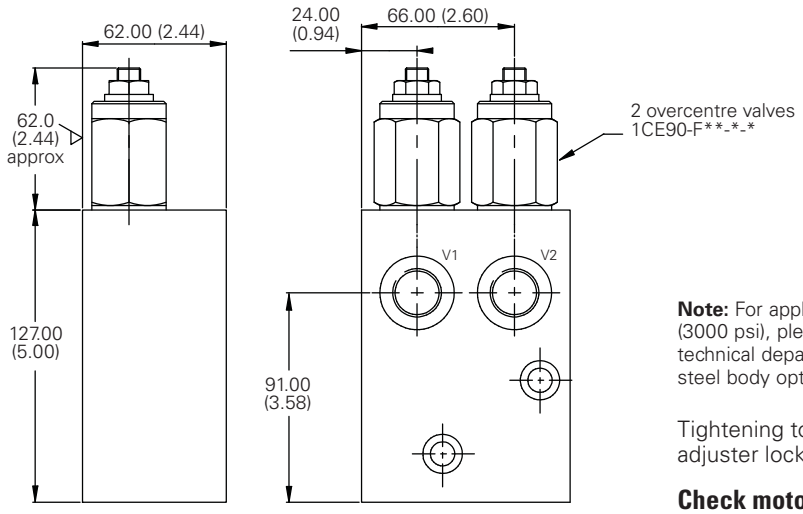

Note: For applications over 210 bar (3000 psi), please consult our technical department or use the steel body option.

Tightening torque of "F" adjuster locknut - 20 to 25 Nm

Check motor mounting compatibility before specifying.

Where measurements are critical request certified drawings. We reserve the right to change specifications without notice.

1CESHOMP35/1CEESHOMP35 - Motor mounted valves

OMP Mounting pattern single and dual overcenter valve with brake release shuttle

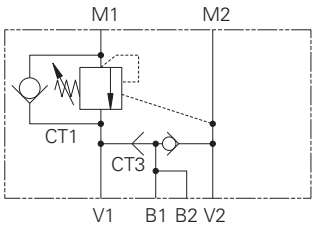

1CESHOMP35-1

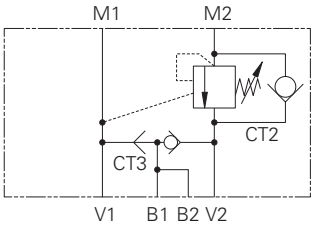

1CESHOMP35-2

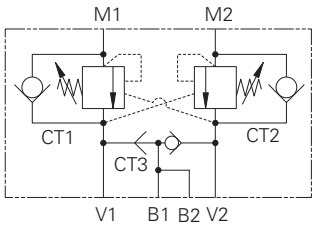

1CEESHOMP35

Description

Overcenter Valves give static and dynamic control of loads by regulating the flow into and out of hydraulic actuators. When installed close to or within an actuator, the overcenter valve will stop runaway in the event of hose burst and if open center directional control valves are used, will allow thermal expansion relief of the hydraulic fluid.

These dual overcenter valves also contain a brake release shuttle valve which ensures that pressure is applied to a brake release circuit regardless of whether pressure is applied to ports V1 or V2. These multifunction valves are normally used for the static and dynamic control of systems using motors or semi-rotary actuators.

Operation

The check section allows free flow into the actuator then holds and locks the load against movement. The pilot assisted relief valve section will give controlled movement when pilot pressure is applied. The relief section is normally set to open at a pressure at least 1.3 times the maximum load induced pressure but the pressure required to open the valve and allow movement depends on the pilot ratio of the valve. For optimization of load control and energy usage, a choice of pilot ratios is available.

- The pressure required to open the valve and start actuator movement can be calculated as follows:

$$\text{Pilot Pressure} = \frac{\text{(Relief Setting) - (Load Pressure)}}{\text{Pilot Ratio}}$$

Pilot ratios

2.5:1 Best suited for extremely unstable applications such as long booms or flexible frameworks.

5:1 Best suited for applications where load varies (Standard) and machine structure can induce instability

10:1 Best suited for applications where the load remains relatively constant.

Performance data

Ratings and specifications

Figures based on: Oil Temp = 40°C Viscosity = 32 cSt (150 SUS)	
Rated flow	30 L/min (8 USgpm)
Max setting	Max load induced Pressure: 270 bar (4000 psi) Relief setting: 350 bar (5000 psi)
Cartridge material	Working parts hardened & ground steel External surface zinc plated
Body material	Standard aluminium (up to 210 bar*) Add suffix '377' for steel option
Mounting position	Unrestricted
Cavity Number	A6610 (See section M)
Torque cartridge into cavity	45 Nm (33 ibs ft)
Weight (inc cartridges)	1CESHOMP35 2.29 kg (5.04 lbs) 1CEESHOMP35 2.34 kg (5.15 lbs)
Seal kit number	1CESHOMP35 SK1285 (Nitrile) SK1285V (Viton) 1CEESHOMP35 SK1284 (Nitrile) SK1284V (Viton)
Recommended filtration level	BS5540/4 Class 18/13 (25 micron nominal)
Operating Temp	-30°C to +90°C (-22° to 194°F)
Leakage	0.3 milliL/min nominal (5 dpm)
Nominal viscosity range	5 to 500 cSt

Where measurements are critical request certified drawings. We reserve the right to change specifications without notice.

1CESHOMP35/1CEESHOMP35 - Motor mounted valves

OMP Mounting pattern single and dual overcenter valve with brake release shuttle

Pressure drop

2.5:1 & 5:1 Version

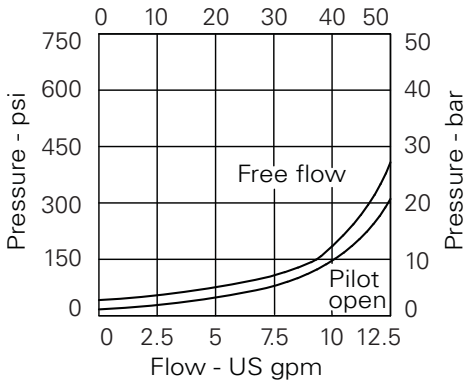

10:1 Version

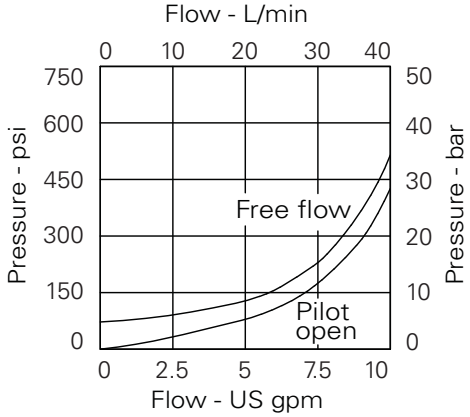

Model code

1CE*SHOMP35-*– F 4W – 35 S 5 BK

1 2 3 4 5 6 7

1 Basic code

1CEESHOMP35 - Double Cartridge and Body
1CESHOMP35-1 - Single overcenter in line V1-M1
1CESHOMP35-2 - Single overcenter in line V2-M2

2 Adjustment means

F - Screw Adjustment

3 Port size

Code	V1 & V2	Brake	Housing number
4W	1/2" BSPP	1/4" BSPP	BXP24053-4W-S

4 Pressure range

Note: Code based on pressure in bar.

20 - (2.5:1 and 5:1): 70-210 bar.
Std setting 100 bar
(10:1): 100-210 bar.
Std setting 100 bar

35 - (2.5:1 and 5:1): 100-350 bar.
Std setting 210 bar
(10:1): 120-350 bar.
Std setting 210 bar

Std setting made at 4.8 L/min

* Cartridges must not be adjusted above the safe working pressure of the motor

5 Seals

S - Nitrile
(For use with most industrial hydraulic oils)
SV - Viton
(For high temperature and most special fluid applications)

6 Pilot ratio

2 - 2.5:1
5 - 5:1
10 - 10:1

7 Mounting

BK - Bolt Kit

Cavity plug part number
Nitrile
AXP13032-01-N
Viton
AXP13032-01-V

Dimensions

mm (inch)

Complete Valve 1/2" Ports
Basic Code: 1CEESHOMP35

Note: For applications over 210 bar (3000 psi), please consult our technical department or use the steel body option.

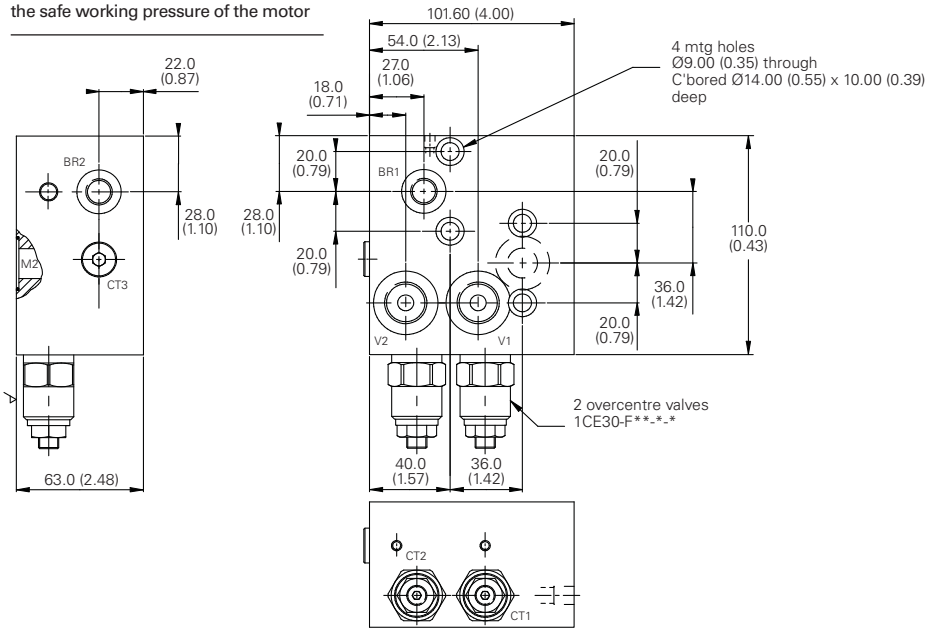

Tightening torque of "F" adjuster locknut - 20 to 25 Nm

Check motor mounting compatibility before specifying.

Where measurements are critical request certified drawings. We reserve the right to change specifications without notice.

1CESHOMS95/1CEESHOMS95 - Motor mounted valves

OMS Mounting pattern single and dual overcenter valves with brake release shuttle

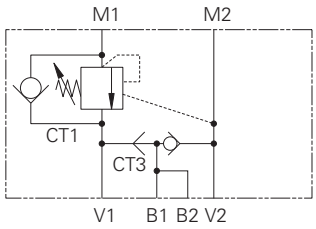

1CESHOMS95-1

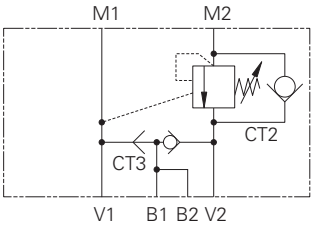

1CESHOMS95-2

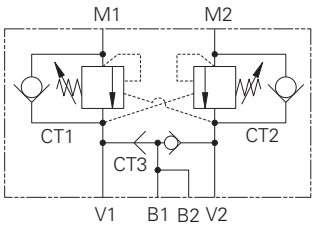

1CEESHOMS95

Description

Overcenter Valves give static and dynamic control of loads by regulating the flow into and out of hydraulic actuators. When installed close to or within an actuator, the overcenter valve will stop runaway in the event of hose burst and if open center directional control valves are used, will allow thermal expansion relief of the hydraulic fluid.

These dual overcenter valves also contain a brake release shuttle valve which ensures that pressure is applied to a brake release circuit regardless of whether pressure is applied to ports V1 or V2. These multifunction valves are normally used for the static and dynamic control of systems using motors or semi-rotary actuators.

Operation

The check section allows free flow into the actuator then holds and locks the load against movement. The pilot assisted relief valve section will give controlled movement when pilot pressure is applied. The relief section is normally set to open at a pressure at least 1.3 times the maximum load induced pressure but the pressure required to open the valve and allow movement depends on the pilot ratio of the valve. For optimization of load control and energy usage, a choice of pilot ratios is available.

The pressure required to open the valve and start actuator movement can be calculated as follows:

Pilot Pressure =

$$\frac{\text{(Relief Setting) - (Load Pressure)}}{\text{Pilot Ratio}}$$

Pilot ratios

4:1 Best suited for applications where load varies and machine structure can induce instability

8:1 Best suited for applications where the load remains relatively constant.

Other ratios available upon request

Performance data

Ratings and specifications

Figures based on: Oil Temp = 40°C Viscosity = 32 cSt (150 SUS)	
Rated flow	90 L/min (23 USgpm)
Max setting	Max load induced Pressure: 270 bar (4000 psi) Relief setting: 350 bar (5000 psi)
Cartridge material	Working parts hardened & ground steel External surface zinc plated
Body material	Standard aluminium (up to 210 bar*) Add suffix '377' for steel option
Mounting position	Unrestricted
Cavity Number	A12336 (See section M)
Torque cartridge into cavity	60 Nm (44 ibs ft)
Weight (inc cartridges)	1CESHOMS95 2.32 kg (5.10 lbs) 1CEESHOMS95 2.42 kg (5.32 lbs)
Seal kit number	1CESHOMS95 SK1282 (Nitrile) SK1282V (Viton) 1CEESHOMS95 SK795 (Nitrile) SK795V (Viton)
Recommended filtration level	BS5540/4 Class 18/13 (25 micron nominal)
Operating Temp	-30°C to +90°C (-22° to 194°F)
Leakage	0.3 milliL/min nominal (5 dpm)
Nominal viscosity range	5 to 500 cSt

K

Where measurements are critical request certified drawings. We reserve the right to change specifications without notice.

1CESHOMS95/1CEESHOMS95 - Motor mounted valves

OMS Mounting pattern single and dual overcenter valves with brake release shuttle

Pressure drop

4:1 Version

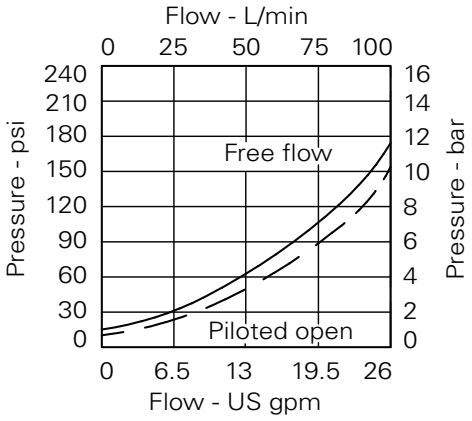

8:1 Version

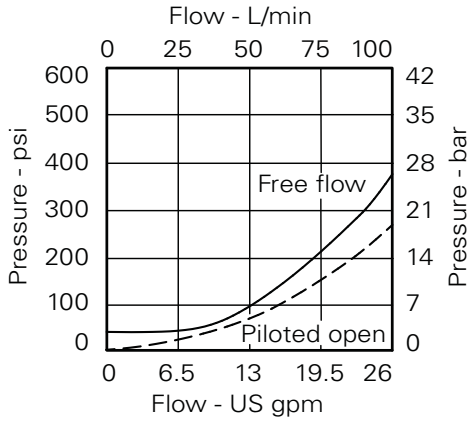

Model code

1CE*SHOMS95-* –F 4W – 35 S 4 BK

1 2 3 4 5 6 7

1 Basic code

1CEESHOMS95 - Double Cartridge and Body
1CESHOMS95-1 - Single overcenter in line V1-M1
1CESHOMS95-2 - Single overcenter in line V2-M2

2 Adjustment means

F - Screw Adjustment

3 Port size

Code	V1 & V2	Brake	Housing number
4W	1/2" BSPP	3/8" BSPP	BXP24056-4W-S

4 Pressure range

Note: Code based on pressure in bar.

20 - 70-225 bar. Std setting 100 bar

35 - 200-350 bar. Std setting 210 bar

Std setting made at 4.8 L/min

* Cartridges must not be adjusted above the safe working pressure of the motor

5 Seals

S - Nitrile (For use with most industrial hydraulic oils)
SV - Viton
(For high temperature and most special fluid applications)

6 Pilot ratio

4 - 4:1
8 - 8:1

7 Mounting

BK - Bolt Kit

Cavity plug part number

Nitrile
AXP14434-02-N

Viton
AXP14434-02-V

Dimensions

mm (inch)

Complete Valve 1/2" Ports
Basic Code: 1CEESHOMS35

Note: For applications over 210 bar (3000 psi), please consult our technical department or use the steel body option.

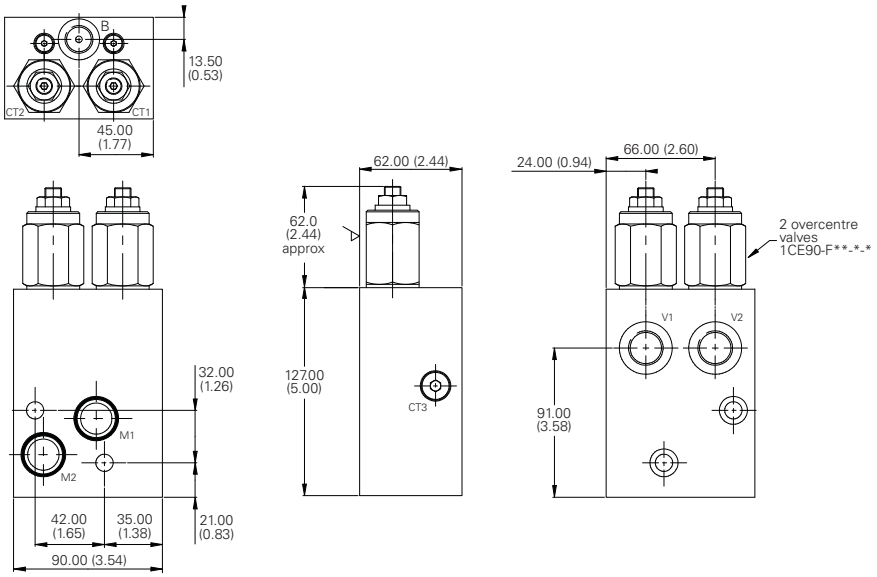

Tightening torque of "F" adjuster locknut - 20 to 25 Nm

Check motor mounting compatibility before specifying.

Where measurements are critical request certified drawings. We reserve the right to change specifications without notice.



EATON
Powering Business Worldwide

Vane Pumps: VMQ



- Pin Vane Design
- Multiple Configurations
- Very Durable
- Very Quiet
- High Continuous Pressure
- Global Design

Sandwich valves

For applications up to 210 bar (3000 psi)



Powering Business Worldwide

Sandwich valves

SANDWICH VALVES L-4

SANDWICH VALVES - MODEL CODE INFORMATION L-5

SPARE PARTS L-6

PRESSURE CONTROL FUNCTIONS L-8

CHECK & PILOT CHECK FUNCTIONS L-11

CHECK AND FLOW CONTROL FUNCTIONS L-12

FLOW CONTROL FUNCTIONS L-13

FLOW CONTROL & SOLENOID CONTROL FUNCTIONS L-14

SOLENOID CONTROL FUNCTIONS L-15

SOLENOID CONTROL & LOAD CONTROL FUNCTIONS L-20

LOAD CONTROL FUNCTIONS L-20

SPACER/BLANKING/LINKING PLATES L-21

MODEL CODES L-22

DIMENSIONS L-26

PRESSURE CONTROL FUNCTIONS L-50

CHECK FUNCTIONS L-52

FLOW CONTROL FUNCTIONS L-53

SOLENOID CONTROL FUNCTIONS L-54

LOAD CONTROL FUNCTIONS L-56

BLANKING AND LINKING PLATES L-57

MODEL CODES L-58

DIMENSIONS L-61

Typical Sandwich Valve System

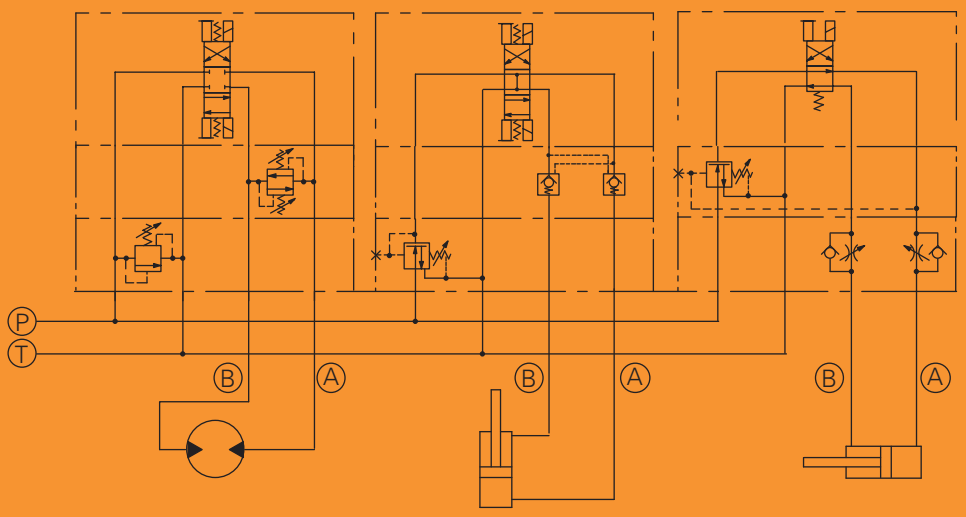

⚠ Warning

Aluminum housing is only to be used for pressures up to 210 bar (3000 psi).

⚠ Warning

Application of these products beyond published performance specifications may cause valve malfunction which may result in personal injury and/or damage to the machine.

Sandwich valves

Build a compact, cost effective, reliable hydraulic system with Eaton aluminum sandwich valves and SICV valves

Reduces system space requirements

Sandwich valves make compact hydraulic systems in which specific function valves are "sandwich" mounted between a directional valve and a standard mounting surface.

Reduce cost

Sandwich valves eliminate inter valve piping and leak-prone tube and pipe connections. Installed cost is less than when using conventional valves.

Versatile and easy to install

Sandwich valves have all the internal passages necessary to serve the directional valve topping them. Mounting surfaces and port patterns are to international standards: any valve conforming to ISO 4401 size 03; ANSI/B93.7M size D03; NFPA-D03; CETOP 3; and DIN 24340, NG6 mounting interface can be used with these Sandwich valves.

Linking and blanking plates are available to facilitate a variety of circuit designs and flexibility in applying these valves.

Rugged and reliable

Cartridges are produced from hardened steel and mounted in aluminum housings. Excellent reliability is ensured. Cartridges are accessible without removing valves from an assembled stack. The housings are assembled in a kit containing a locating pin for error free installation, all necessary plugs and standard Viton seals.

Sandwich systems... Easy to understand, easy to design

Sandwich circuitry is best shown using slightly different symbols than those for traditional valve configurations. Each Sandwich symbol has the same basic form and size as shown in figure 1.

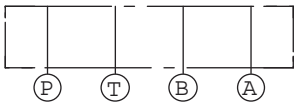

Figure 1

For ease of understanding, remember the directions of flow for each line, and that all four flow paths pass through each valve (see figure 2).

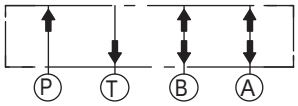

Figure 2

For clarity, directional valves are drawn vertically in Sandwich circuit diagrams (see figure 3).

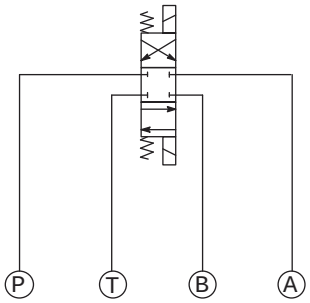

Figure 3

Each station (valve stack) is a combination of functions. When designing and assembling Sandwich valves, care must be taken to ensure that they interact as required by stacking the functions in the correct sequence (figure 4 is an example).

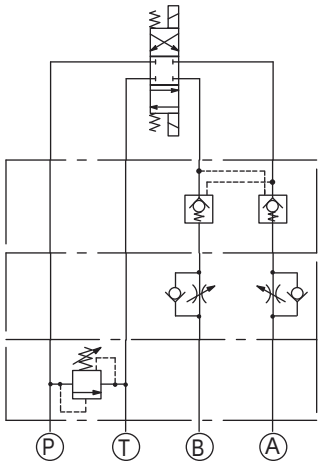

Figure 4

Relief valves should normally be positioned next to the mounting surface (i.e. at the bottom of the stack). When both a flow control and a pilot operated check valve are required, it is recommended that the flow control valve be between the check valve and the actuator to prevent check valve chatter.

A combination of directional valve, sandwich valve(s) and subplate/manifold block completes the assembly.

Sandwich valve assemblies

Aluminum sandwich valve assemblies consist of a housing kit, and one or more cartridges. They can be purchased complete by specifying a sandwich model code or built by mixing an appropriate housing kit with cartridges to attain a desired function.

A housing kit contains a housing, locating pin, all necessary plugs and standard Viton seals.

Sandwich valve locators

Sandwich valve locators group products by function and provides an easy way to identify a specific sandwich valve in the catalog.

It presents a sandwich valve functional symbol, function description and basic model code. Since every sandwich is put together by inserting cartridges into a housing kit, the locator provides concise information for easy selection of the components to build a specific function.

The following information is shown in the locator for every function: Housing kit model, part number, catalog page with the detailed information for the housing kit, model code and the catalog number for the cartridges & cartridge cavity.

Housing kits data page

Housing kits data pages L-25 thru L-44 provide the dimensional data, typical cartridges and functional information.

L

Where measurements are critical request certified drawings. We reserve the right to change specifications without notice.

Sandwich valves ordering information

To order sandwich valve components, use the information in the sandwich valves locator pages L-6 thru L-19.

To order a sandwich valve complete for models with one cartridge:

- Select the model code from the sandwich valve locator. Note that the housing kit model code substitutes for the standard inline body code in the same model field.
- Go to the referenced cartridge valve literature to complete the balance of the sandwich model code.

To order a sandwich valve complete for models with two cartridges:

- Select the model code from the sandwich valves locaor.
- Go to the referenced page for the model code description.

Sandwich valve model codes

In order to speed the release of new products to customers, the sandwich valve product line has been configured with a fixed length model code. A fixed length model code simplifies the ordering process for our customers and facilitates the automated production release of new valves and settings. In general, we have followed the standard model code for the base valve with the following three exceptions:

1. **Seals**: When specifying Buna-N seals, an N should be used in the model code for sandwich valves. (In the standard valve model code Buna-N seals are specified by leaving this column blank.)
2. **Pressure settings**: To avoid confusion on pressure settings, the setting should always be specified and not left blank. In addition, the confusing decimal system has been eliminated for sandwich valves. In the sandwich valve model code, simply specify the entire pressure setting in PSI using four digits for relief valves and 3 digits for check valves. Include leading zeros if necessary. For example:

Relief and Counterbalance Valves

500 psi – 0500
50 psi – 0050
1525 psi – 1525

Check Valves

210 psi – 210
20 psi - 020
3 psi - 003

3. **Flow settings**: To avoid confusion, the setting should always be specified and not left blank. In the sandwich valve model codes, all flow settings are specified in tenths of a GPM without decimal points. (include trailing zeroes and leading zeros if where required.)

For example:

1 gpm – 010

1.2 gpm – 012

15 gpm - 150

Two examples are shown below:

Base valve model code

RV5-10(V)-*-**-**/****

- Pressure setting in 100psi increments ie 20 = 2000 psi
- Spring Range (15, 36, 50 etc.)
- Valve Body – "0" if none
- Adjustment Option (S, C or K)
- Seals – Omit for Buna-N "V" for Viton

Sandwich valve model code (D03)

RV5-10*-*-A321P-/****

- Pressure setting in psi-do not omit (Round to nearest 5 psi)
- Pressure Range (15, 36, 50 etc.)
- Sandwich Body
- Adjustment Option (S, C or K)
- Seals – "N" for Buna-N or "V" for Viton

Base valve model code

FAR1-12(V)-*-*-*.***

- Flow setting in tenths i.e. 2 = 2 gpm, or 2.5 = 2.5 gpm
- Valve Body – "0" if none
- Adjustment Option (S, C or K)
- Seals – Omit for Buna-N "V" for Viton

Sandwich valve model code (relieving from P to T) (D05)

FAR1-12*-*-A524A-*

- Flow setting in tenths i.e. 020 = 2 gpm, or 025 = 2.5 gpm
- Sandwich Body
- Adjustment Option (S, C or K)
- Seals – "N" for Buna-N "V" for Viton

L

Where measurements are critical request certified drawings. We reserve the right to change specifications without notice.

Spare parts

For sandwich valve assemblies

Accessory plates & stud rods

Accessory plates

Linking and blanking plates are available to facilitate a variety of circuit designs and flexibility in applying these valves. All accessory plates come with Viton O-Rings.

Stud rods

To simplify the installation of the sandwich valves, stud rod & nuts kits can be ordered and cut to length in the field. Once the rods are installed, they act as a guide when assembling the sandwich valves stack. After assembling the directional control valve on top of the stack, special nuts are used to retain the stack. Eaton offers 178 mm (7 in) or 305 mm (12 in) bolt kits (one bolt kit for these Sandwich valves comprises 4 bolts). To determine your needs, use the following guide for bolt length calculation.

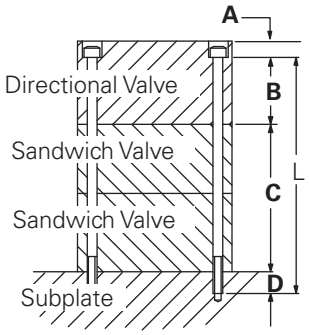

A Amount of thread required for the stud nut 10,2 (0.40)

B Bolt clamp length in directional valve, blanking plate etc.

C Height of intermediate valve stack, comprising Vickers Sandwich valve(s) plus tapping plates etc.

D Depth of thread engagement in sub-plate/ manifold block. Minimum amount of thread required 10,2 mm (0.40 in.)

L Required bolt length; select from the table

Stud rod & nut kit*

Metric: M5-0.8thd		Inch: 10-24	
Length (mm)	**Kit number**	**Length (in)**	**Kit number**
178	02-184934	7	02-184932
305	02-184935	12	02-184933

- Kit contains four stud rods and four stud nuts

Spare parts

Stud rod and nut kits are listed above. Individual nuts are also available:

Nuts		Seal kits	
Length (Thd)	**Kit number**	**Seal material**	**Seal Kit number**
10-24	02-184940	Buna N	02-184951
M5-0.8	02-184941	Viton	02-185282

Note: Bolts should be torqued to 4.5-6.0 Nm (40-53 in. lbs) with threads lubricated.

Note: If not using Eaton bolt kits, bolts must be to Grade 12.9 (ISO 898) or better.

Filtration requirements

For products in this catalog the recommendation fluid cleanliness levels is:
Up to 210 bar (3000 psi)
18/16/13

Temperature limits

Ambient range:
-40° C to +120° C
(-40° F to +248° F)

Ordering procedure

Specify requirements by housing kit, or valve model code, and by seal kit number.

L

Where measurements are critical request certified drawings. We reserve the right to change specifications without notice.

Powering Business Worldwide

Sandwich valves

CETOP05 Sandwich valve bodies and assemblies
for applications up to 210 bar (3000 psi)



L

Where measurements are critical request certified drawings. We reserve the right to change specifications without notice.

Pressure control functions

Sandwich valves locator
ISO 4401-03/CETOP03 series

⚠ Caution
Sandwich valve flow ratings are limited by the ratings of individual cartridges. Consult cartridge valve literature.

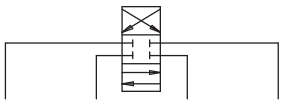

Function	Functional symbol	Model code	Housing kit	
Relief valve P-T	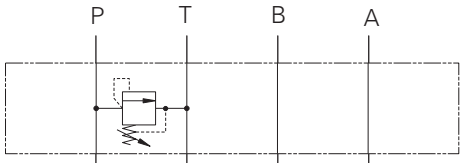	RV1 10 * * A321P **/**** 00	Model Part No. Cartridge Cartridge Data Sheet Cavity	A321P 02 185342 RV1-10 Section E C-10-2
Relief valve A-T	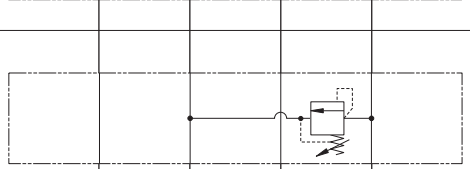	RV1 10 * * A321A **/**** 00	Model Part No. Cartridge Cartridge Data Sheet Cavity	A321A 02-185340 RV1-10 Section E C-10-2
Relief valve B-T	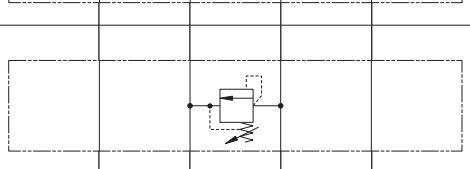	RV1 10 * * A321B **/**** 00	Model Part No. Cartridge Cartridge Data Sheet Cavity	A321B 02-185341 RV1-10 Section E C-10-2
Proportional Relief valve P-T	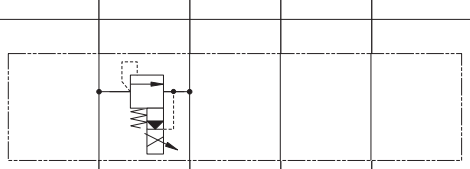	ERV1 10 * *** A321P *** * 00	Model Part No. Cartridge Cartridge Data Sheet Cavity	A321P 02-185342 ERV1-10 Section B C-10-2
Proportional Relief valve A-T	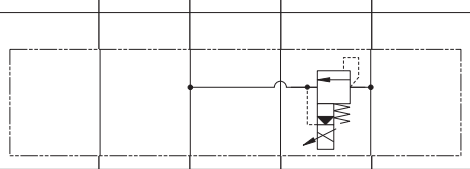	ERV1 10 * *** A321A *** * 00	Model Part No. Cartridge Cartridge Data Sheet Cavity	A321A 02-185340 ERV1-10 Section B C-10-2
Proportional Relief valve B-T	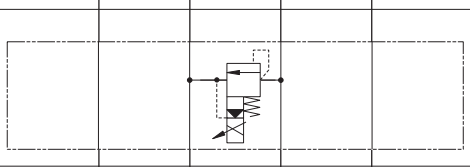	ERV1 10 * *** A321B *** * 00	Model Part No. Cartridge Cartridge Data Sheet Cavity	A321B 02-185341 ERV1-10 Section B C-10-2
Relief valve P-T	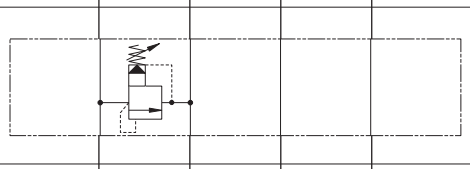	RV5 10 * * A321P **/**** 00	Model Part No. Cartridge Cartridge Data Sheet Cavity	A321P 02-185342 RV5-10 Section B C-10-2
Relief valve A-T	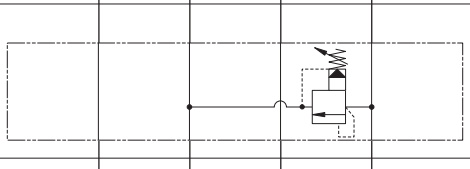	RV5 10 * * A321A **/**** 00	Model Part No. Cartridge Cartridge Data Sheet Cavity	A321A 02-185340 RV5-10 Section E C-10-2
Relief valve B-T	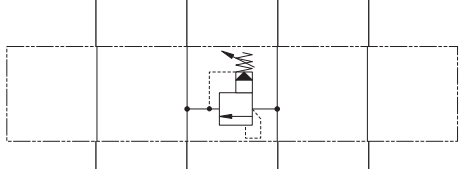	RV5 10 * * A321B **/**** 00	Model Part No. Cartridge Cartridge Data Sheet Cavity	A321B 02-185341 RV5-10 Section E C-10-2

L

Where measurements are critical request certified drawings. We reserve the right to change specifications without notice.

⚠ Caution
Sandwich valve flow ratings are limited by the ratings of individual cartridges. Consult cartridge valve literature.

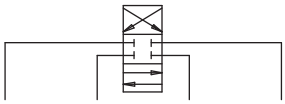

Function	Functional symbol	Model code	Housing kit	
Solenoid Controlled Relief Valve P-T Normally Opened	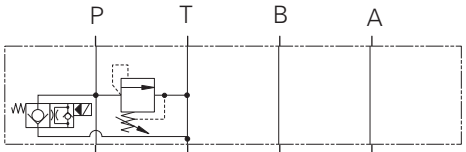	SRV 10 * 0 S A322P 35/ ** ** Refer to page L-20 for model code breakdown	Model Part No. Cartridge Cartridge Data Sheet Cavity	A322P 02-185344 SV5-8/RV-1-10 Section A/E C-8-2/C-10-2
Solenoid Controlled Relief Valve P-T Normally Closed	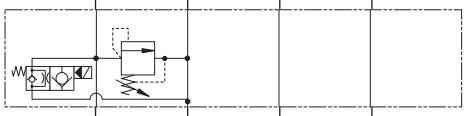	SRV 10 * C S A322P 35/*** ** Refer to page L-20 for model code breakdown	Model Part No. Cartridge Cartridge Data Sheet Cavity	A322P 02-185344 SV5-8-C/ RV1-10 Section A/E C-8-2/C-10-2
Dual Relief Valve A-T, B-T	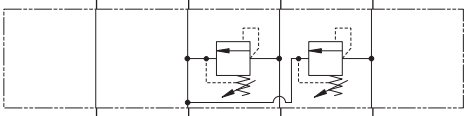	1DR30 * A311W A** *B** * Refer to page L-21 for model code breakdown	Model Part No. Cartridge Cartridge Data Sheet Cavity	A311W 02-185364 1DR30 qty 2 Section E C-8-2 qty. 2
Dual Relief valve A-T, B-T	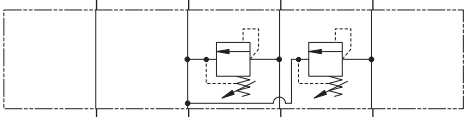	RV1 10 * * A312W A**/****B**/**** 00 Refer to page L-20 for model code breakdown	Model Part No. Cartridge Cartridge Data Sheet Cavity	A312W 02-185365 RV1-10 qty 2 Section E C-10-2 qty 2
Dual Relief valve A-T, B-T	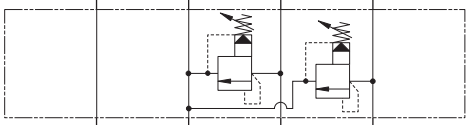	RV5 10 * * A312W A**/****B**/**** 00 Refer to page L-20 for model code breakdown	Model Part No. Cartridge Cartridge Data Sheet Cavity	A312W 02-185365 RV5-10 qty 2 Section E C-10-2 qty 2
Cross Port Relief Valve A-B	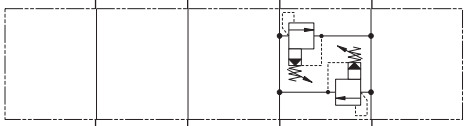	RV3A 10 ** A321W A**/****B**/****00 Refer to page L-20 for model code breakdown	Hsg kit: model Part No. Cartridge Cartridge Data Sheet Cavity	A321W 02-185343 RV3A-10 qty 2 Section E C-10-2 qty 2
Cross Port Relief Valve A-B	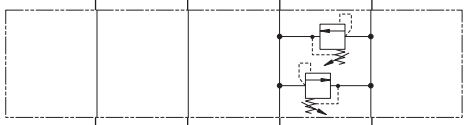	RV5A 10 * * A321W A**/****B**/**** 00 Refer to page L-20 for model code breakdown	Model Part No. Cartridge Cartridge Data Sheet Cavity	A321W 02-185343 RV5-10 qty 2 Section E C-10-2 qty 2
Sequence Valve In to P		PSV7 10 * * A316P **/**** 00 Refer to page L-21 for model code breakdown	Model Part No. Cartridge Cartridge Data Sheet Cavity	A316P 02-185374 PSV7-10 Section E C-10-3
Sequence Valve In to A Reverse FF Check	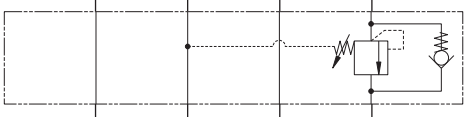	PSV7 10 * * A316A **/**** 00 Refer to page L-21 for model code breakdown	Model Part No. Cartridge Cartridge Data Sheet Cavity	A316A 02-185372 PSV7-10/ CV3-10 Section E/G C-10-3/C-10-2

Where measurements are critical request certified drawings. We reserve the right to change specifications without notice.

Pressure control functions

⚠ Caution
Sandwich valve flow ratings are limited by the ratings of individual cartridges. Consult cartridge valve literature.

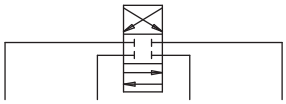

Function	Functional symbol	Model code	Housing kit	
Sequence Valve Out of A Reverse FF Check	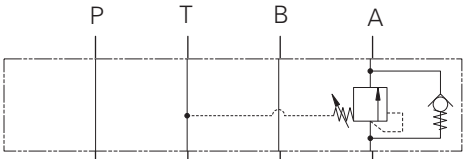	PSV7 10 * * A319A **/**** 00 Refer to page L-21 for model code breakdown	Model Part No. Cartridge Cartridge Data Sheet Cavity	A319A 02-185377 PSV7-10/CV3-10 Section E/G C-10-3/C-10-2
Sequence Valve In to B Reverse FF Check	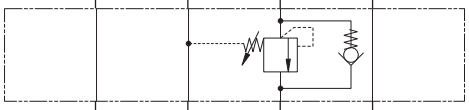	PSV7 10 * * A316B **/**** 00 Refer to page L-21 for model code breakdown	Model Part No. Cartridge Cartridge Data Sheet Cavity	A316B 02-185373 PSV7-10/ CV3-10 Section E/G C-10-3/C-10-2
Sequence Valve Out of B Reverse FF Check	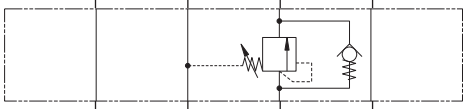	PSV7 10 * * A319B **/**** 00 Refer to page L-21 for model code breakdown	Model Part No. Cartridge Cartridge Data Sheet Cavity	A319B 02-185378 PSV7-10/ CV3-10 Section E /G C-10-3/C-10-2
Reducing Valve on (P) Drained to T		PRV2 10 * * A326P **/**** 00 Refer to page L-21 for model code breakdown	Model Part No. Cartridge Cartridge Data Sheet Cavity	A326P 02-185353 PRV2-10 Section E C-10-3
Reducing on A Drained to T Reverse FF Check	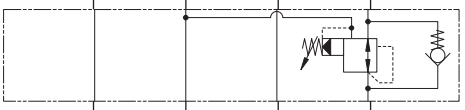	PRV2 10 * * A310A **/**** 00 Refer to page L-21 for model code breakdown	Model Part No. Cartridge Cartridge Data Sheet Cavity	A310A 02-185362 PRV2-10/ CV3-10 Section E/G C-10-3/C-10-2
Reducing on B Drained to T Reverse FF Check	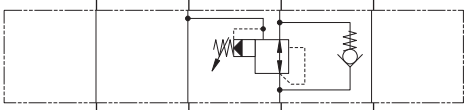	PRV2 10 * * A310B **/**** 00 Refer to page L-21 for model code breakdown	Hsg kit: model Part No. Cartridge Cartridge Data Sheet Cavity	A310B 02-185363 PRV2-10/CV3-10 Section E/G C-10-3/C-10-2
Pressure Compensator Restrictive on P w/Shuttle Sense from A & B	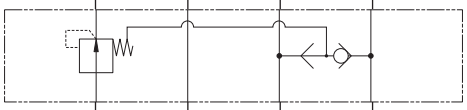	PCR 10 * A309P *** 00 Refer to page L-22 for model code breakdown	Model Part No. Cartridge Cartridge Data Sheet Cavity	A309P 02-185381 DPS2-10-F-F-0/ DSV2-8 Section L/G C-10-3S/C-8-3
Pressure Compensator Bypass to T w/Shuttle Sense from A & B	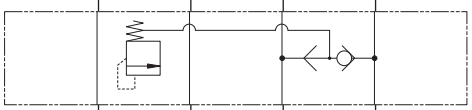	PCB 10 * * A319P *** 00 Refer to page L-22 for model code breakdown	Model Part No. Cartridge Cartridge Data Sheet Cavity	A319P 02-185382 DPS2-10-P-F-0/ DSV2-8 Section L/G C-8-3/C-10-3S

L

Where measurements are critical request certified drawings. We reserve the right to change specifications without notice.

⚠ Caution
Sandwich valve flow ratings are limited by the ratings of individual cartridges. Consult cartridge valve literature.

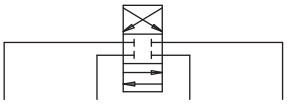

Function	Functional symbol	Model code	Housing kit
Pilot Operated Check Valve On A Pilot from B	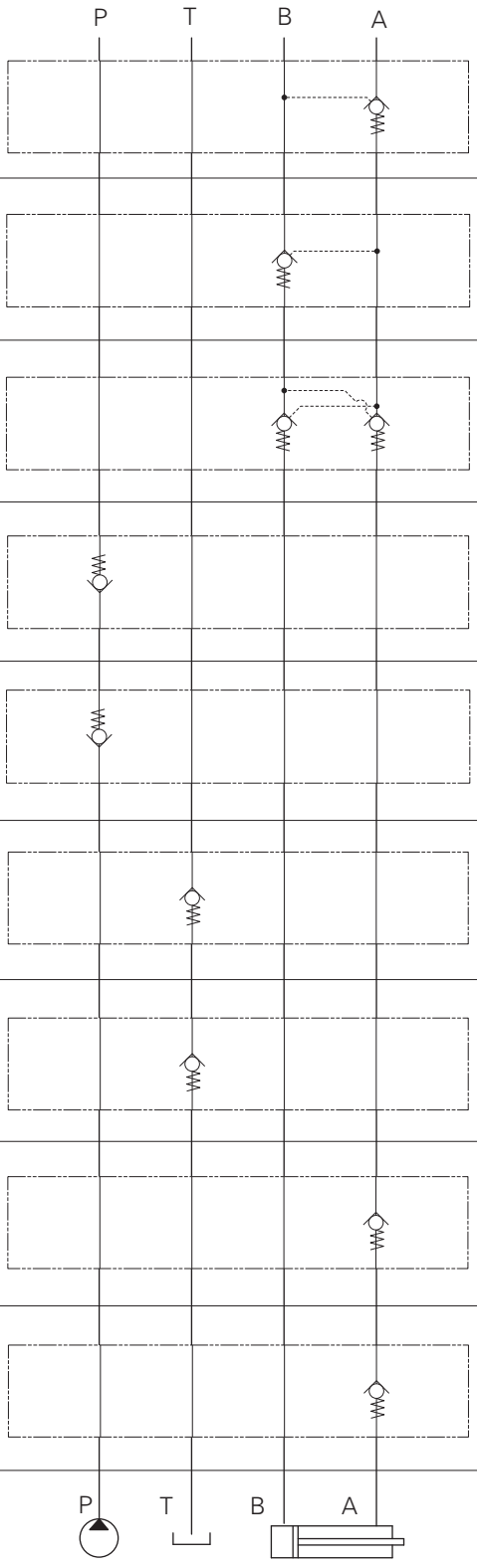	4CK30 * A323A *** 00	Model A323A Part No. 6025820-001 Cartridge 4CK30 Cartridge Data Sheet Section G Cavity A6610
Pilot Operated Check Valve On B Pilot from A		4CK30 * A323B *** 00	Model A323B Part No. 6025821-001 Cartridge 4CK30 Cartridge Data Sheet Section G Cavity A6610
Pilot Operated Check Valve On A & B Cross Piloted		4CK30 * A323W *** 00	Model A323W Part No. 6025822-001 Cartridge 4CK30 Cartridge Data Sheet Section G Cavity A6610
Check Valve On P		CV3 8 * P A307P *** 00	Model A307P Part No. 02-185356 Cartridge CV3-8 Cartridge Data Sheet Section G Cavity C-8-2
Check Valve On P		CV3 10 * P A324P *** 00	Model A324P Part No. 02-185350 Cartridge CV3-10 Cartridge Data Sheet Section G Cavity C-10-2
Check Valve on T		CV3 8 * P A307T *** 00	Hsg kit: model A307T Part No. 02-185357 Cartridge CV3-8 Cartridge Data Sheet Section G Cavity C-8-2
Check Valve On T		CV3 10 * P A308T *** 00	Model A308T Part No. 02-185360 Cartridge CV3-10 Cartridge Data Sheet Section G Cavity C-10-2
Check Valve On A Free Flow Out		CV3 8 * P A307A *** 00	Model A307A Part No. 02-185354 Cartridge CV3-8 Cartridge Data Sheet Section G Cavity C-8-2
Check Valve On A Free Flow Out		CV3 10 * P A314A *** 00	Model A314A Part No. 02-185367 Cartridge CV3-10 Cartridge Data Sheet Section G Cavity C-10-2

Where measurements are critical request certified drawings. We reserve the right to change specifications without notice.

Check and flow control functions

⚠ Caution
Sandwich valve flow ratings are limited by the ratings of individual cartridges. Consult cartridge valve literature.

Function	Functional symbol	Model code	Housing kit
Check Valve On B Free Flow Out	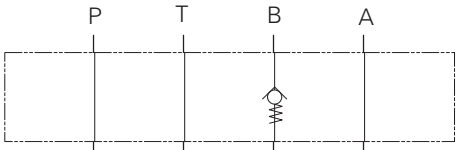	CV3 8 * P A307B *** 00	Model A307B Part No. 02-185355 Cartridge CV3-8 Cartridge Data Sheet Section G Cavity C-8-2
Check Valve On B Free Flow Out	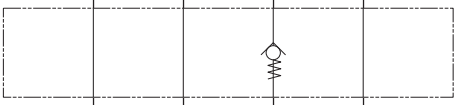	CV3 10 * P A314B *** 00	Model A314B Part No. 02-185368 Cartridge CV3-10 Cartridge Data Sheet Section G Cavity C-10-2
Check Valve On T On A & B	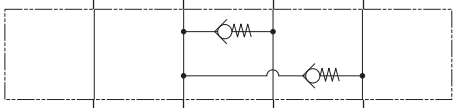	CV3 8 * P A320T *** 00	Model A320T Part No. 02-185379 Cartridge CV3-8 qty 2 Cartridge Data Sheet Section G Cavity C-8-2 qty 2
Check Valve on T to A & B	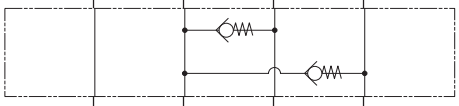	CV10 10 * P A317T *** 00	Model A317T Part No. 02-185375 Cartridge CV3-10 qty 2 Cartridge Data Sheet Section G Cavity C-10-2 qty 2
Anti-Caviation Check P-T		CV16 10 * P A321P *** 00	Model A321P Part No. 02-185342 Cartridge CV16-10-P-O-5 Cartridge Data Sheet Section G Cavity C-10-2
Shuttle Valve A & B Output External	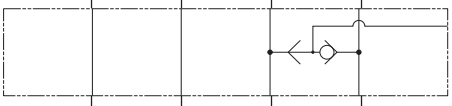	DSV2 8 * B A309W 00	Model A309W Part No. 02-185361 Cartridge DSV2-8-B-O Cartridge Data Sheet Section G Cavity C-8-3
Flow Control Meter in P		NV1 10 * * A324P 00	Model A324P Part No. 02-185350 Cartridge NV1-10 Cartridge Data Sheet Section H Cavity C-10-2
Flow Control & Check Meter in A		FCV7 10 * * A324A FF 00	Model A324A Part No. 02-185348 Cartridge FCV7-10 Cartridge Data Sheet Section H Cavity C-10-2
Flow Control & Check Meter Out A		FCV7 10 * * A314A FF 00	Model A314A Part No. 02-185367 Cartridge FCV7-10 Cartridge Data Sheet Section H Cavity C-10-2
Flow Control & Check Meter in B	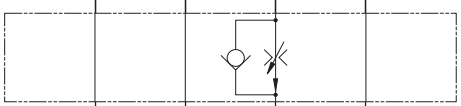	FCV7 10 * * A324B FF 00	Model A324B Part No. 02-185349 Cartridge FCV7-10 Cartridge Data Sheet Section H Cavity C-10-2

Where measurements are critical request certified drawings. We reserve the right to change specifications without notice.

⚠ Caution
Sandwich valve flow ratings are limited by the ratings of individual cartridges. Consult cartridge valve literature.

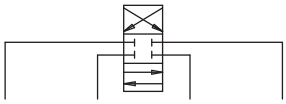

Function	Functional symbol	Model code	Housing kit	
Flow Control & Check Meter Out B	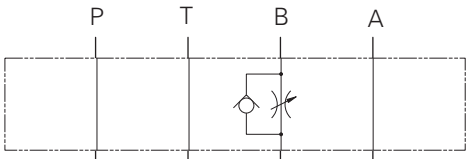	FCV7 10 * * A314B FF 00	Model Part No. Cartridge Cartridge Data Sheet Cavity	A314B 02-185368 FCV7-10 Section H C-10-2
Flow Control & Check Meter In A & B	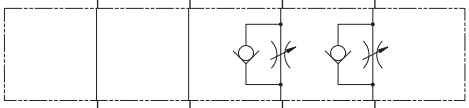	FCV7 10 * * A324W FF 00 Refer to page L-22 for model code breakdown	Model Part No. Cartridge Cartridge Data Sheet Cavity	A324W 02-185351 FCV7-10 qty 2 Section H C-10-2 qty 2
Flow Control & Check Meter Out A & B	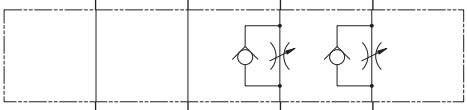	FCV7 10 * * A314W FF 00 Refer to page L-22 for model code breakdown	Model Part No. Cartridge Cartridge Data Sheet Cavity	A314W 02-185369 FCV7-10 qty 2 Section H C-10-2 qty 2
Flow Regulator Pressure Compensated and Check Meter in P		FAR1 10 * * A324P *** 00	Model Part No. Cartridge Cartridge Data Sheet Cavity	A324P 02-185350 FAR1-10 Section H C-10-2
Flow Regulator Pressure Compensated and Check Meter in A		FAR1 10 * * A314A *** 00	Model Part No. Cartridge Cartridge Data Sheet Cavity	A314A 02-185367 FAR1-10 Section H C-10-2
Flow Regulator Pressure Compensated and Check Meter Out A		FAR1 10 * * A324A *** 00	Hsg kit: model Part No. Cartridge Cartridge Data Sheet Cavity	A324A 02-185348 FAR1-10 Section H C-10-2
Flow Regulator Pressure Compensated and Check Meter in B	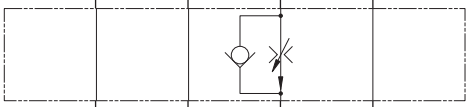	FAR1 10 * * A314B *** 00	Model Part No. Cartridge Cartridge Data Sheet Cavity	A314B 02-185368 FAR1-10 Section H C-10-2
Flow Regulator Pressure Compensated and Check Meter Out B	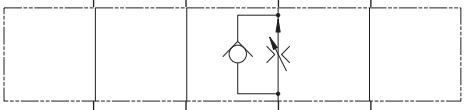	FAR1 10 * * A324B *** 00	Model Part No. Cartridge Cartridge Data Sheet Cavity	A324B 02-185349 FAR1-10 Section H C-10-2
Flow Regulator Pressure Compensated and Check Meter In A & B	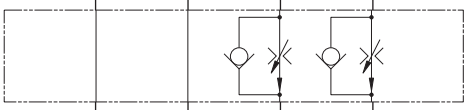	FAR1 10 * * A314W A***B*** 00	Model Part No. Cartridge Cartridge Data Sheet Cavity	A314W 02-185369 FAR1-10 qty 2 Section H C-10-2 qty 2

Where measurements are critical request certified drawings. We reserve the right to change specifications without notice.

Flow control & solenoid control functions

⚠ Caution
Sandwich valve flow ratings are limited by the ratings of individual cartridges. Consult cartridge valve literature.

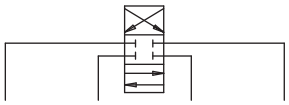

Function	Functional symbol	Model code	Housing kit
Flow Regulator Pressure Compensated and Check Meter Out A & B	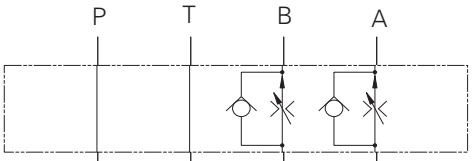	FAR1 10 * * A324W A***B*** 00	Model Part No. A324W 02-185351 Cartridge FAR1-10 qty 2 Cartridge Data Sheet Section H Cavity C-10-2 qty 2
Proportional Flow Control Pressure Compensation on P		EPV 10 * * A313P *** * * 00 Refer to page L-23 for model code breakdown	Model Part No. A313P 02-185366 Cartridge EPV-10, DPS2-10 Cartridge Data Sheet Section I & B Cavity C-10-2/C-10-3S
Solenoid 2 Way Poppet Type (P-T), N/C	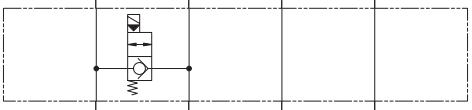	SV3 10 * C A325P *** * 00	Model Part No. A325P 02-185352 Cartridge SV3-10-C Cartridge Data Sheet Section A Cavity C-10-2
Solenoid 2 Way Poppet Type (P-T), N/O		SV3 10 * O A325P *** * 00	Model Part No. A325P 02-185352 Cartridge SV3-10-0 Cartridge Data Sheet Section A Cavity C-10-2
Solenoid 2 Way Spool type (P-T), N/C	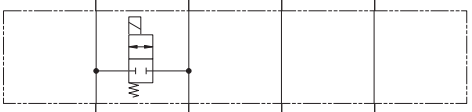	SV4 10 * C A325P *** * 00	Model Part No. A325P 02-185352 Cartridge SV4-10-C Cartridge Data Sheet Section A Cavity C-10-2
Solenoid 2 Way Spool Type (P-T), N/O	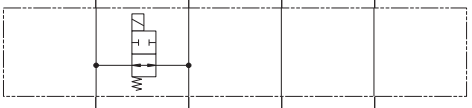	SV4 10 * O A325P *** * 00	Model Part No. A325P 02-185352 Cartridge SV4-10-0 Cartridge Data Sheet Section A Cavity C-10-2
Solenoid 2 Way Poppet Type Blocked on A Normally Closed	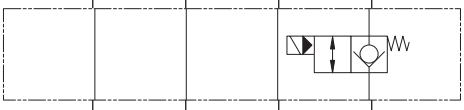	SV3 10 * C A324A *** * 00	Model Part No. A324A 02-185348 Cartridge SV3-10-C Cartridge Data Sheet Section A Cavity C-10-2

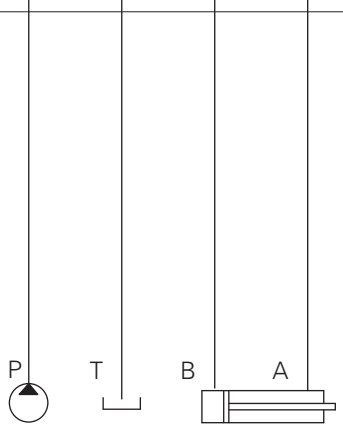

L

Where measurements are critical request certified drawings. We reserve the right to change specifications without notice.

⚠ Caution
Sandwich valve flow ratings are limited by the ratings of individual cartridges. Consult cartridge valve literature.

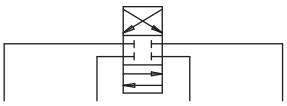

Function	Functional symbol	Model code	Housing kit
Poppet Type Blocked on A Normally Open		SV3 10 * O A324A *** * 00	Model A324A Part No. 02-185348 Cartridge SV3-10-O Cartridge Data Sheet Section A Cavity C-10-2
Spool Type Blocked on A Normally Closed		SV4 10 * C A324A *** * 00	Model A324A Part No. 02-185348 Cartridge SV4-10-C Cartridge Data Sheet Section A Cavity C-10-2
Spool Type Blocked on A Normally Open		SV4 10 * O A324A *** * 00	Model A324A Part No. 02-185348 Cartridge SV4-10-O Cartridge Data Sheet Section A Cavity C-10-2
Poppet Type Blocked on B Normally Closed		SV3 10 * C A324B *** * 00	Model A324B Part No. 02-185349 Cartridge SVC3-10-C Cartridge Data Sheet Section A Cavity C-10-2
Poppet Type Blocked on B Normally Open		SV3 10 * O A324B *** * 00	Model A324B Part No. 02-185349 Cartridge SV3-10-C Cartridge Data Sheet Section A Cavity C-10-2
Spool Type Blocked on B Normally Closed		SV4 10 * C A324B *** * 00	Model A324B Part No. 02-185349 Cartridge SV4-10-C Cartridge Data Sheet Section A Cavity C-10-2
Spool Type Blocked on B Normally Open		SV4 10 * O A324B *** * 00	Model A324B Part No. 02-185349 Cartridge SV4-10-O Cartridge Data Sheet Section A Cavity C-10-2
Poppet Type Blocked on A & B Normally Closed		SV3 10 * C A324W *** * 00	Model A324W Part No. 02-185351 Cartridge SV3-10-C qty 2 Cartridge Data Sheet Section A Cavity C-10-2 qty 2
Poppet Type Blocked on A & B Normally Open		SV3 10 * O A324W *** * 00	Model A324W Part No. 02-185351 Cartridge SV3-10-O qty 2 Cartridge Data Sheet Section A Cavity C-10-2 qty 2

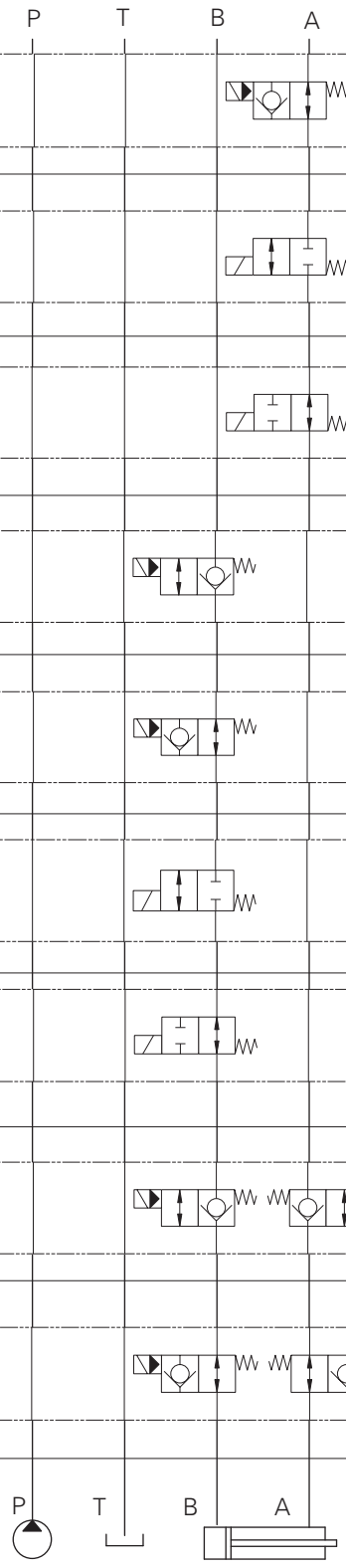

Where measurements are critical request certified drawings. We reserve the right to change specifications without notice.

Solenoid control functions

⚠ Caution
Sandwich valve flow ratings are limited by the ratings of individual cartridges. Consult cartridge valve literature.

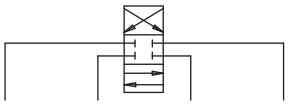

Function	Functional symbol	Model code	Housing kit
Spool Type Blocked On A & B Normally Closed	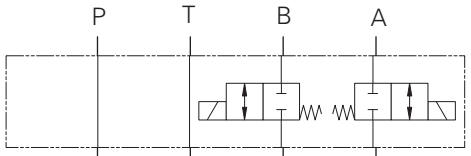	SV4 10 * C A324W *** * 00	Model A324W Part No. 02-185351 Cartridge SV4-10-C qty 2 Cartridge Data Sheet Section A Cavity C-10-2 qty 2
Spool Type Blocked on A & B Normally Open	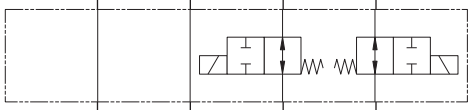	SV4 10 * O A324W *** * 00	Model A324W Part No. 02-185351 Cartridge SV4-10-O qty 2 Cartridge Data Sheet Section A Cavity C-10-2 qty 2
Poppet Type Load Holding On A Normally Closed		SV3 10 * C A314A *** * 00	Model A314A Part No. 02-185367 Cartridge SV3-10-C Cartridge Data Sheet Section A Cavity C-10-2
Poppet Type Load Holding on A Normally Open	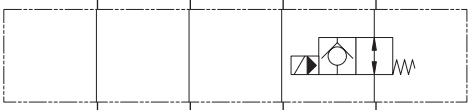	SV3 10 * O A314A *** * 00	Model A314A Part No. 02-185367 Cartridge SV3-10-O Cartridge Data Sheet Section A Cavity C-10-2
Poppet Type Load Holding on B Normally Closed	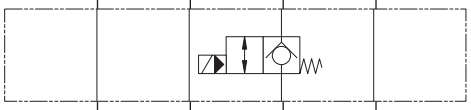	SV3 10 * C A314B *** * 00	Model A314B Part No. 02-185368 Cartridge SV3-10-C Cartridge Data Sheet Section A Cavity C-10-2
Poppet Type Load Holding on B Normally Open	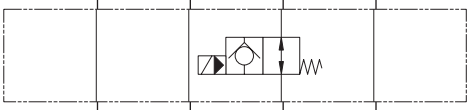	SV3 10 * O A314B *** * 00	Model A314B Part No. 02-185368 Cartridge SV3-10-O Cartridge Data Sheet Section A Cavity C-10-2
Poppet Type Load Holding on A & B Normally Closed	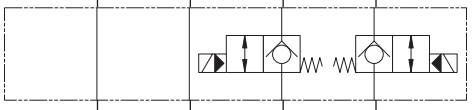	SV3 10 * C A314W *** * 00	Model A314W Part No. 02-185369 Cartridge SV3-10-C qty 2 Cartridge Data Sheet Section A Cavity C-10-2 qty 2
Poppet Type Load Holding on A & B Normally Open	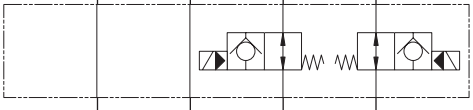	SV3 10 * O A314W *** * 00	Model A314W Part No. 02-185369 Cartridge SV3-10-O qty 2 Cartridge Data Sheet Section A Cavity C-10-2 qty 2

L

Where measurements are critical request certified drawings. We reserve the right to change specifications without notice.

⚠ Caution
Sandwich valve flow ratings are limited by the ratings of individual cartridges. Consult cartridge valve literature.

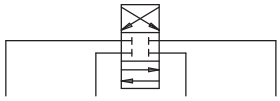

Function	Functional symbol	Model code	Housing kit
Poppet Type Bi-Directional Load Holding on A Normally Closed	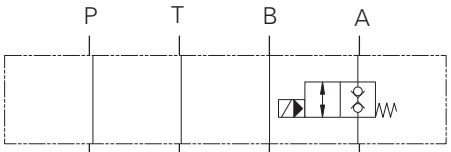	SBV11 10 * C A314A *** * 00	Model A314A Part No. 02-185367 Cartridge SBV11-10-C Cartridge Data Sheet Section A Cavity C-10-2
Poppet Type Bi-Directional Load Holding on A Normally Open	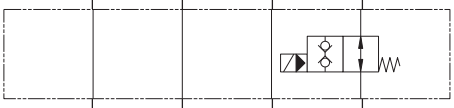	SBV11 10 * O A314A *** * 00	Model A314A Part No. 02-185367 Cartridge SBV11-10-O Cartridge Data Sheet Section A Cavity C-10-2
Poppet Type Bi-Directional Load Holding on B Normally Closed	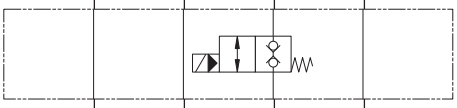	SBV11 10 * C A314B *** * 00	Model A314B Part No. 02-185368 Cartridge SBV11-10-C Cartridge Data Sheet Section A Cavity C-10-2
Poppet Type Bi-Directional Load Holding on B Normally Open	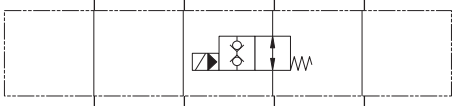	SBV11 10 * O A314B *** * 00	Model A314B Part No. 02-185368 Cartridge SBV11-10-O Cartridge Data Sheet Section A Cavity C-10-2
Poppet Type Bi-Directional Load Holding on A & B Normally Closed	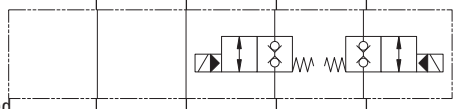	SBV11 10 * C A314W *** * 00	Model A314W Part No. 02-185369 Cartridge SBV11-10-C qty 2 Cartridge Data Sheet Section A Cavity C-10-2 qty 2
Poppet Type Bi-Directional Load Holding on A & B Normally Open	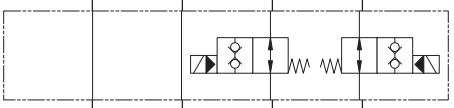	SBV11 10 * O A314W *** * 00	Model A314W Part No. 02-185369 Cartridge SBV11-10-O qty 2 Cartridge Data Sheet Section A Cavity C-10-2 qty 2

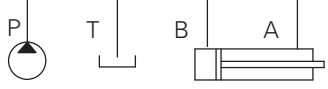

L

Solenoid control functions

⚠ Caution
Sandwich valve flow ratings are limited by the ratings of individual cartridges. Consult cartridge valve literature.

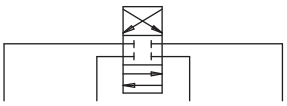

Function	Functional symbol	Model code	Housing kit
Poppet Type Unload A - T Normally Closed		SV3 10 * C A315A *** * 00	Model A315A Part No. 02-185370 Cartridge SV3-10-C Cartridge Data Sheet Section A Cavity C-10-2
Poppet Type Unload A - T Normally Open		SV3 10 * O A315A *** * 00	Model A315A Part No. 02-185370 Cartridge SV3-10-O Cartridge Data Sheet Section A Cavity C-10-2
Spool Type Unload A - T Normally Closed		SV4 10 * C A315A *** * 00	Model A315A Part No. 02-185370 Cartridge SV4-10-C Cartridge Data Sheet Section A Cavity C-10-2
Spool Type Unload A - T Normally Open		SV4 10 * O A315A *** * 00	Model A315A Part No. 02-185370 Cartridge SV4-10-O Cartridge Data Sheet Section A Cavity C-10-2
Poppet Type Unload B - T Normally Closed		SV3 10 * C A315B *** * 00	Model A315B Part No. 02-185371 Cartridge SV3-10-C Cartridge Data Sheet Section A Cavity C-10-2
Poppet Type Unload B - T Normally Open		SV3 10 * O A315B *** * 00	Model A315B Part No. 02-185371 Cartridge SV3-10-O Cartridge Data Sheet Section A Cavity C-10-2
Poppet Type Unload B - T Normally Closed		SV4 10 * C A315B *** * 00	Model A315B Part No. 02-185371 Cartridge SV4-10-C Cartridge Data Sheet Section A Cavity C-10-2

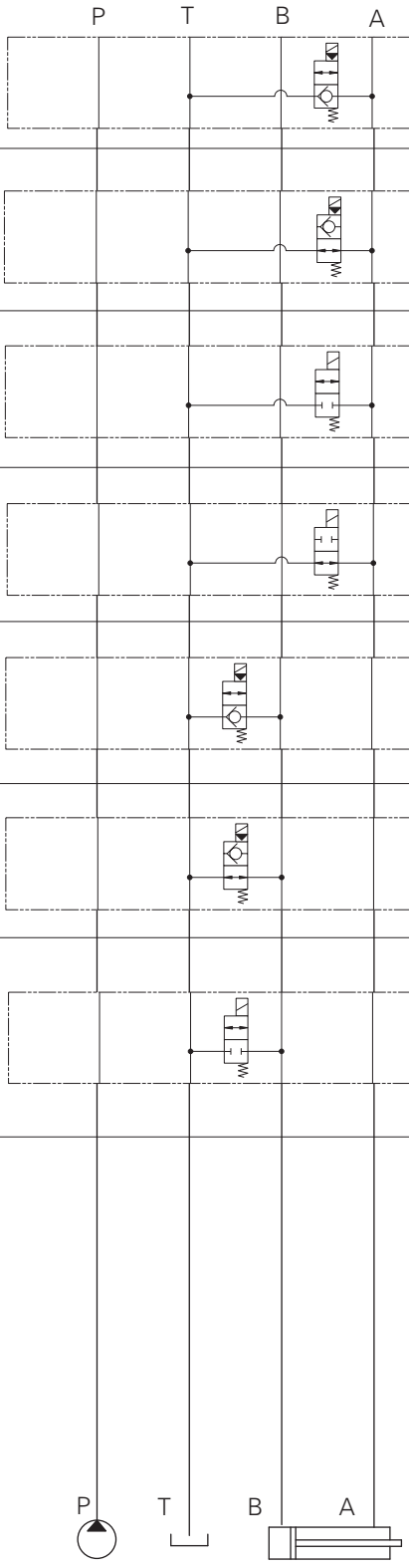

Where measurements are critical request certified drawings. We reserve the right to change specifications without notice.

⚠ Caution
Sandwich valve flow ratings are limited by the ratings of individual cartridges. Consult cartridge valve literature.

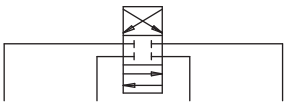

Function	Functional symbol	Model code	Housing kit
2 Way Spool Type Unload B - T Normally Open	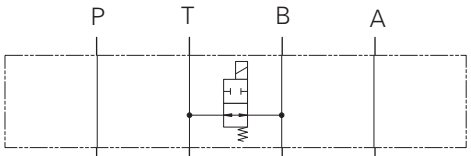	SV4 10 * 0 A315B *** * 00	Model Part No. Cartridge Cartridge Data Sheet Cavity A315B 02-185371 SV4-10-0 Section A C-10-2
2 Way Poppet Type Unload A & B - T Normally Closed	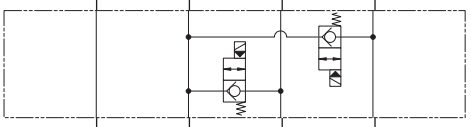	SV3 10 * C A317T *** * 00	Model Part No. Cartridge Cartridge Data Sheet Cavity A317T 02-185375 SV3-10-C qty 2 Section A C-10-2 qty 2
2 Way Poppet Type Unload A & B - T Normally Open	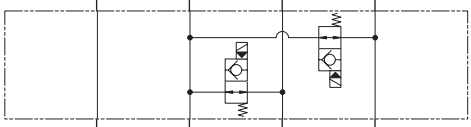	SV3 10 * 0 A317T *** * 00	Model Part No. Cartridge Cartridge Data Sheet Cavity A317T 02-185375 SV3-10-0 qty 2 Section A C-10-2 qty 2
2 Way Spool Type Unload A & B - T Normally Closed	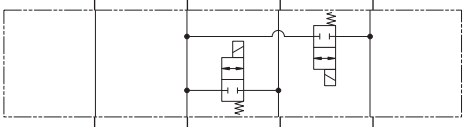	SV4 10 * C A317T *** * 00	Model Part No. Cartridge Cartridge Data Sheet Cavity A317T 02-185375 SV4-10-C qty 2 Section A C-10-2 qty 2
2 Way Spool Type Unload A & B - T Normally Open	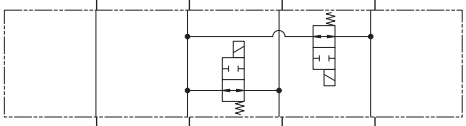	SV4 10 * 0 A317T *** * 00	Model Part No. Cartridge Cartridge Data Sheet Cavity A317T 02-185375 SV4-10-0 qty 2 Section A C-10-2 qty 2
Poppet Type Bi-Directional Blocked A - B & B - Normally Closed		SBV11 10 * C A318W *** * 00	Model Part No. Cartridge Cartridge Data Sheet Cavity A318W 02-185376 SBV11-10-C Section A C-10-2
Poppet Type Bi-Directional Blocked A - B & B - Normally Open	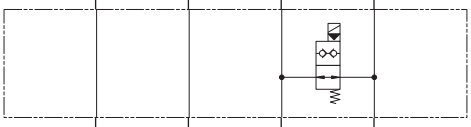	SBV11 10 * 0 A318W *** * 00	Model Part No. Cartridge Cartridge Data Sheet Cavity A318W 02-185376 SBV11-10-0 Section A C-10-2

Where measurements are critical request certified drawings. We reserve the right to change specifications without notice.

Solenoid control & load control functions

⚠ Caution
Sandwich valve flow ratings are limited by the ratings of individual cartridges. Consult cartridge valve literature.

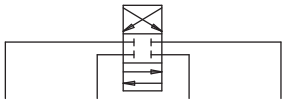

Function	Functional symbol	Model code	Housing kit
Solenoid Valve Spool Type Blocked A to B & B to A Normally Closed	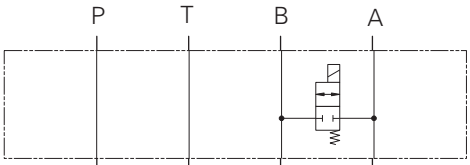	SV4 10 * C A318W *** * 00	Model A318W Part No. 02-185376 Cartridge SV4-10-C Cartridge Data Sheet Section A Cavity C-10-2
Solenoid Valve Spool Type Blocked A to B & B to A Normally Open	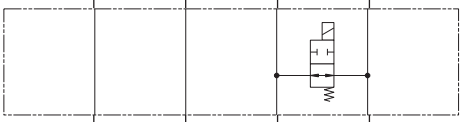	SV4 10 * O A318W *** * 00	Model A318W Part No. 02-185376 Cartridge SV4-10-O Cartridge Data Sheet Section A Cavity C-10-2
Solenoid 3-Way Selector on P	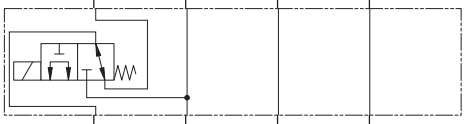	SV1 10 * 3 A326P *** * 00	Model A326P Part No. 02-185353 Cartridge SV1-10-3 Cartridge Data Sheet Section A Cavity C-10-3
Solenoid 3-Way Selector on P		SV4 10 * 3 A326P *** * 00	Model A326P Part No. 02-185353 Cartridge SV4-10-3 Cartridge Data Sheet Section A Cavity C-10-3
Manual Rotary Selector on P		MRV3 10 * K A236P 00	Model A326P Part No. 02-185353 Cartridge MRV3-10-K-O Cartridge Data Sheet Section D Cavity C-10-3

Load control functions

Function	Functional symbol	Model code	Housing kit
Counterbalance Valve on A Pilot from B	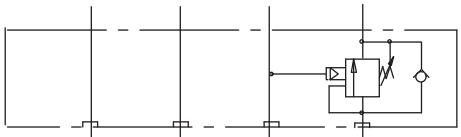	1CE30- * A323A-** * *	Model A323A Part No. 6025820-001 Cartridge 1CE30 Cartridge Data Sheet Section F Cavity A6610
Counterbalance Valve on B Pilot from A	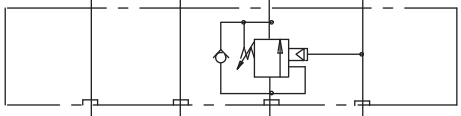	1CE30- * A323B-** * *	Model A323B Part No. 6025821-001 Cartridge 1CE30 Cartridge Data Sheet Section F Cavity A6610
Counterbalance Valve On A & B Cross Piloted	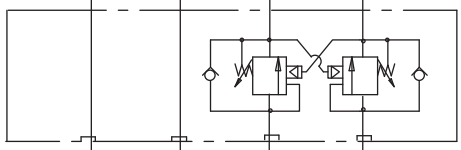	1CE30- * A323WA-** * */** ** Refer to page L-23 for model code breakdown	Model A323W Part No. 6025822-001 Cartridge 1CE30 qty 2 Cartridge Data Sheet Section F Cavity A6610 qty 2

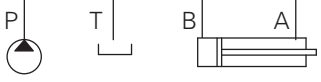

Where measurements are critical request certified drawings. We reserve the right to change specifications without notice.

Spacer/blanking/linking plates

⚠ Caution
Sandwich valve flow ratings are limited by the ratings of individual cartridges. Consult cartridge valve literature.

Note: O-Rings to be ordered separately.

Function	Functional symbol	Part number	
Spacer Plate 10 mm (.39) Thick	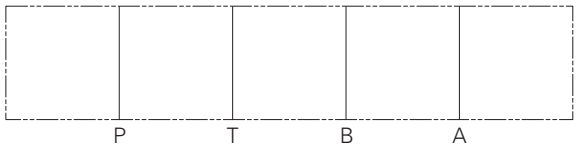	Buna N O-Ring Kit Viton O-Ring Kit	02-184951 02-185282
Blanking Plate	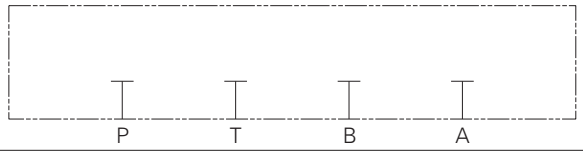	02-185274 Buna N O-Ring Kit Viton O-Ring Kit	 02-184951 02-185282
Linking Plate P to A with B & T Blocked	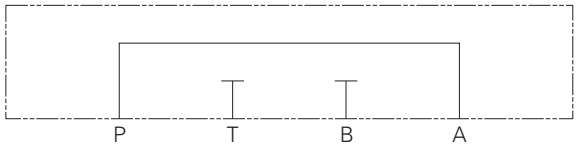	02-185275 Buna N O-Ring Kit Viton O-Ring Kit	 02-184951 02-185282
Linking Plate P to A & B to T	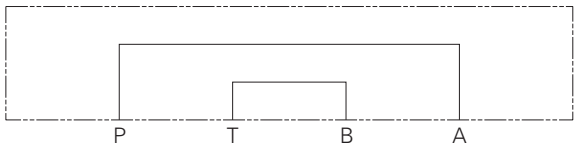	02-185276 Buna N O-Ring Kit Viton O-Ring Kit	 02-184951 02-185282
Linking Plate P to B & A to T	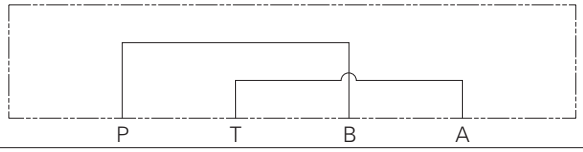	02-185277 Buna N O-Ring Kit Viton O-Ring Kit	 02-184951 02-185282
Linking Plate P to T with A & B Blocked	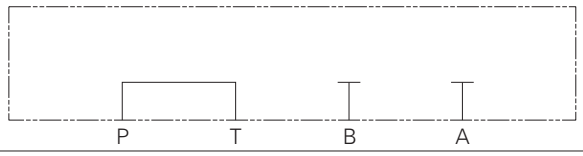	02-185278 Buna N O-Ring Kit Viton O-Ring Kit	 02-184951 02-185282
Linking Plate A to B with P & T Blocked	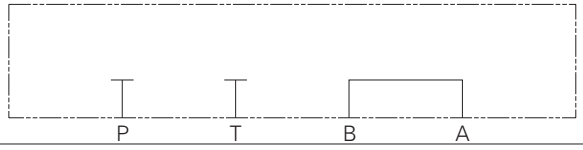	02-185279 Buna N O-Ring Kit Viton O-Ring Kit	 02-184951 02-185282
Linking Plate P to B with A & T Blocked	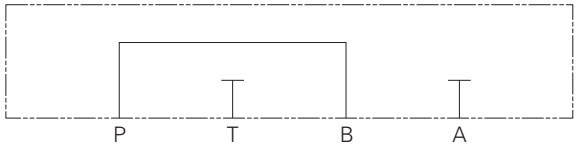	02-185280 Buna N O-Ring Kit Viton O-Ring Kit	 02-184951 02-185282
Linking Plate P to A & B with T Blocked	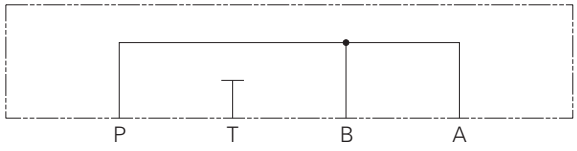	02-185281 Buna N O-Ring Kit Viton O-Ring Kit	 02-184951 02-185282

Viton® is a registered trademark of E.I.DuPont

L

Model codes

For sandwich valveassemblies with two valves

Model code SRV 10 * * * A322P ** / **** *** * **

1 2 3 4 5 6 7 8 9 10 11

1 Function
SRV - Solenoid actuated relief valve

2 Size
10 - 10 Size

3 Seals
N - Buna-N
V - Viton®

This Assembly includes an SV5-8 solenoid valve and an RV5-10 relief valve

4 Style
C - Normally closed
O - Normally open

5 Adjustment
C - Cap
F - Fixed
I - Internal
K- Knob
S - Screw

6 Housing kit
A322P - Solenoid Relief Valve

7 Cracking pressure range
03 - 3,5-20 bar (50-300 psi)
35 - 17-240 bar (250-3500 psi)

8 Pressure setting
User requested setting in psi

9 Voltage range
12D - 24 VDC
24D - 24 VDC
115A - 115 VAC
230A- 230 VAC

10 Connector type
G - ISO 4400 DIN 43650
P - 1/2"NPT conduit
W - Leadwire

11 Special features
00 - None

Model code RV5A 10 * * ***** A ** / **** B ** / **** **

1 2 3 4 5 6 7 8 9 10 11 12

1 Function
SRV - Relief valve

2 Size
10 - 10 Size

3 Seals
N - Buna-N
V - Viton®

4 Adjustment
C - Cap
F - Fixed
I - Internal
K- Knob
S - Screw

5 Housing kit
A312W - Dual A & B to T relief
A321W - Cross port relief

6 A port acted upon

7 Cracking pressure range
03 - 3,5-20 bar (50-300 psi)
20 - 7-140 bar (100-2000 psi)
35 - 7-240 bar (250-3500 psi)

8 Pressure setting
User requested setting in psi

9 B Port acted upon

10 Cracking pressure range
03 - 3,5-20 bar (50-300 psi)
20 - 7-140 bar (100-2000 psi)
35 - 7-240 bar (250-3500 psi)

11 Pressure setting
User requested setting in psi

12 Special features
00 - None

Model code RV3A 10 * * ***** A ** / **** B ** / **** **

1 2 3 4 5 6 7 8 9 10 11 12

1 Function
RV3 - Relief valve

2 Size
10 - 10 Size

3 Seals
N - Buna-N
V - Viton®

4 Adjustment
C - Cap
F - Fixed
I - Internal
K- Knob
S - Screw

5 Housing kit
A312W - Dual A & B to T relief
A321W - Cross port relief

6 A port acted upon

7 Cracking pressure range
03 - 3,5-20 bar (50-300 psi)
09 - 7-62 bar (100-900 psi)
18 - 7-124 bar (250-1800 psi)
36 - 35-250 bar (500-3600 psi)

8 Pressure setting
User requested setting in psi

9 B port acted upon

10 Cracking pressure range
03 - 3,5-20 bar (50-300 psi)
09 - 7-62 bar (100-900 psi)
18 - 7-124 bar (250-1800 psi)
35 - 35-250 bar (500-3600 psi)

11 Pressure setting
User requested setting in psi

12 Special features
00 - None

L

Where measurements are critical request certified drawings. We reserve the right to change specifications without notice.

Model codes

For sandwich valve assemblies with two valves

**1DR30 * A311W A **/ B **/ * **

1 2 3 4 5 6 7 8 9

1 Function
1DR30 - Relief valve

2 Adjustment
P - Leakproof screw
R - Handknob
G - Tamperproof cap

3 Housing kit

4 A Port acted upon

5 Cracking pressure range
Note: Code based on pressure in bar.
10 - 7-100 bar
Standard setting 70 bar
20 - 35-210 bar
Standard setting 100 bar
Standard setting made at 4.8 L/min.

6 B Port acted upon

7 Cracking pressure
Note: Code based on pressure in bar.
10 - 7-100 bar
Standard setting 70 bar
20 - 35-210 bar
Standard setting 100 bar
Standard setting made at 4.8 L/min.

8 Seals
S - Buna-N
SV - Viton®

9 Special features
00 - None

PRV7 10 * * *** ** / **** **

1 2 3 4 5 6 7 8

1 Function
PSV2 - Pressure reducing valve

2 Size
10 - 10 Size

3 Seals
N - Buna-N
V - Viton®

4 Adjustment
C - Cap
F - Fixed
I - Internal
K- Knob
S - Screw

5 Housing kit

6 Cracking pressure range
02 - 3,5-10 bar (50-150 psi)
03 - 5-20 bar (75-300 psi)
05 - 7-30 bar (100-450 psi)
10 - 14-65 bar (200-950 psi)
18 - 20-125 bar (300-1800 psi)

7 Pressure setting
User requested setting in psi

Note:The other cartridge used in this assembly is a CV3-10-P-020

8 Special features
00 - None

PRV2 10 * * ** ** / **** **

1 2 3 4 5 6 7 8

1 Function
PRV2 - Pressure reducing valve

2 Size
10 - 10 Size

3 Seals
N - Buna-N
V - Viton®

4 Adjustment
C - Cap
F - Fixed
I - Internal
K- Knob
S - Screw

5 Housing kit

6 Cracking pressure range
03 - 3,5-20 bar (50-300 psi)
20 - 7-140 bar (100-2000 psi)
36 - 17-240 bar (250-3500 psi)

7 Pressure setting
User requested setting in psi

8 Special features
00 - None

L

Where measurements are critical request certified drawings. We reserve the right to change specifications without notice.

Model codes

For sandwich valve assemblies with two valves

PCB | **10** | * | **A319P** | *** | **

1 2 3 4 5 6

1 Function
PCB - Pressure compensator, bypass

2 Size
10 - 10 Size

3 Seals
N - Buna-N
V - Viton®

4 Housing kit

5 Differential pressure
(of DPS2-10-P-F cartridge)
005 - 0,3 bar (5 psi)
010- 0, 7 bar (10 psi)
020 - 1, 38 bar (20 psi)
040- 2, 75 bar (40 psi)
080 - 5, 5 bar (80 psi)
160- 11,0 bar (160 psi)

6 Special features
00 - None

Note: The operating back pressure at port 3 (at A & B) must never be less than 1.3 times the spring set pressure.

The other cartridge used in the assembly is a DSV2-8-B-0.

PCR | **10** | * | **A309P** | *** | **

1 2 3 4 5 6

1 Function
PCR - Pressure compensator, restrictive

2 Size
10 - 10 Size

3 Seals
N - Buna-N
V - Viton®

4 Housing kit

5 Differential pressure
(of DPS2-10-P-F cartridge)
005 - 0,3 bar (5 psi)
010- 0, 7 bar (10 psi)
020 - 1, 38 bar (20 psi)
040- 2, 75 bar (40 psi)
080 - 5, 5 bar (80 psi)
160- 11,0 bar (160 psi)

6 Special features
00 - None

Note: The operating back pressure at port 3 (at A & B) must never be less than 1.3 times the spring set pressure.

The other cartridge used in the assembly is a DSV2-8-B-0.

FCV7 | **10** | * | * | ***** | **FF** | **

1 2 3 4 5 6 7

1 Function
FCV7 - Flow control valve

2 Size
10 - 10 Size

3 Seals
N - Buna-N
V - Viton®

4 Adjustment
C - Cap
F- Fixed
K- Knob
S - Screw

5 Housing kit
A314W - Meter out
A324W - Meter in

6 Control flow option
FF - Needle valve with free reverse flow

7 Special features
00 - None

L

Where measurements are critical request certified drawings. We reserve the right to change specifications without notice.

Model codes

For sandwich valve assemblies with two valves

FAR1	10	*	*	*****	A	***	B	***
1	2	3	4	5	6	7	8	9

1 Function
FAR1 - Fully adjustable flow regulator

2 Size
10 - 10 Size

3 Seals
N - Buna-N
V - Viton®

4 Adjustment
H - Calibrated handknob with locknut
K - Handknob with locknut
S - Screw with locknut

5 Housing kit
A314W - Meter in
A324W - Meter out

6 A port acted upon

7 Factory set flow rate
Specify in tenths of a gallon per minute. i.e. 025=2.5 USgpm

8 B port acted upon

9 Factory set flow rate
Specify in tenths of a gallon per minute. i.e. 025=2.5 USgpm

EPV	10	*	A313P	***	(*)	*
1	2	3	4	5	6	7

1 Function
EPV - Proportional flow control

2 Size
10 - 10 Size

3 Seals
N - Buna-N
V - Viton®

4 Housing kit

5 Voltage range
12D - 24 VDC
24D- 24 VDC

6 Manual override option
Blank - No manual override
M- Pin type
S- Screw type

7 Coil connector type
F - Weatherpack
Q- Spade terminals
U- DIN 43650
W - Leadwire
Y- Metri-pak

Note: The other cartridge used in the assembly is a DPS2-10-F-F-0-160

1CE30	*	A323W	A	20	S	/	*	B	20	S	/	**	**
1	2	3	4	5	6		7	8	9	10		11	12

1 Pilot ratio/function
1CE30 - Overcenter

2 Adjustment
F - Screw
N - Fixed

3 Housing kit

4 A port acted upon

5 Pressure range
20 - (25:1 & 5:1) 70-210 bar. Standard setting 100 bar (10:1) 100-210 bar. Standard setting 100 bar. Setting made at 4.8 L/min.

6 Seals
S - Buna-N
SV - Viton®

7 Pilot ratio
2- 2.5:1
5- 5:1 (Standard)
10- 10:1

8 B port acted upon

9 Pressure range
20 - (25:1 & 5:1) 70-210 bar. Standard setting 100 bar (10:1) 100-210 bar. Standard setting 100 bar. Setting made at 4.8 L/min.

10 Seals
S - Buna-N
SV - Viton®

11 Pilot ratio
2- 2.5:1
5- 5:1 (Standard)
10- 10:1

12 Special features
00 - None

L

Where measurements are critical request certified drawings. We reserve the right to change specifications without notice.

Dimensions

Spacer, blanking & linking plates

Spacer plate
02-185273

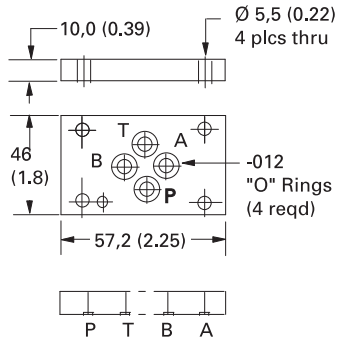

Blanking plate
02-185274

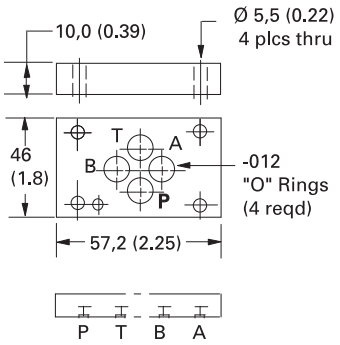

Linking plate
02-185275

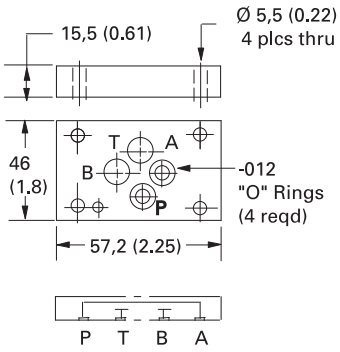

P to A with B & T blocked

Linking plate
02-185276

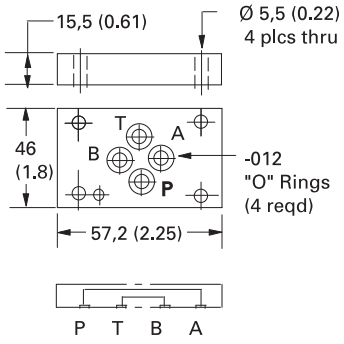

P to A with B & T

Linking plate
02-185277

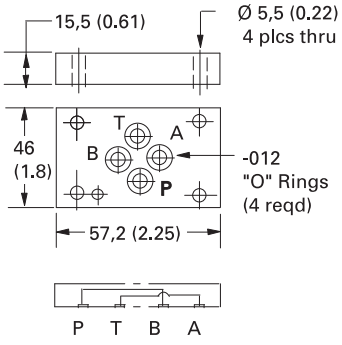

P to B with A & T

Linking plate
02-185278

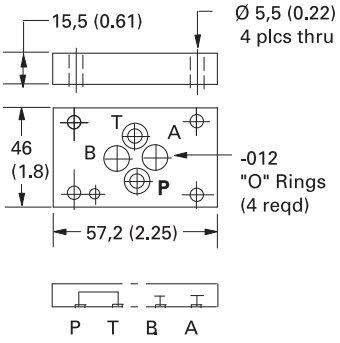

P to T with B & A blocked

Linking plate
02-185279

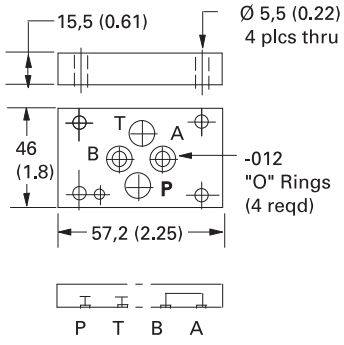

A to B with P & T blocked

Linking plate
02-185280

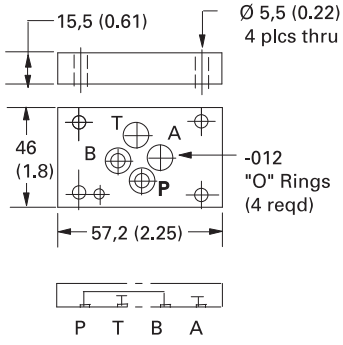

P to B with A & T blocked

Linking plate
02-185281

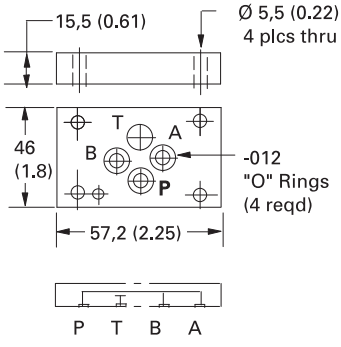

P to A & B with T blocked

L

Where measurements are critical request certified drawings. We reserve the right to change specifications without notice.

Dimensions

mm (inch)

Cavity porting

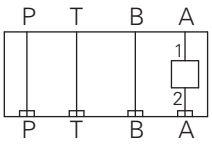

Torque cartridge in housing
34-40 Nm (25-30 ft. lbs)

A307A Housing kit
Part Number **02-185354**

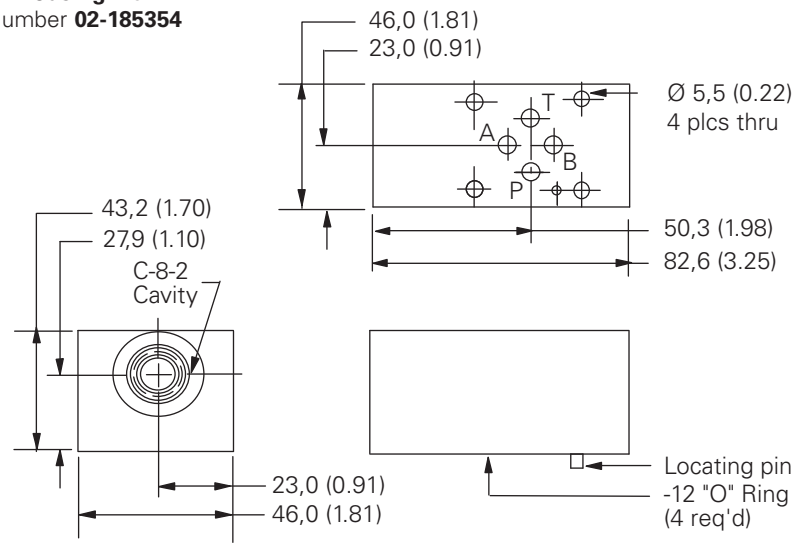

Typical cartridges	Function
CV3-8	Check valve on A, Free flow out

Cavity porting

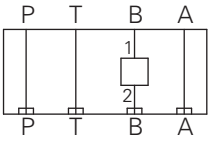

Torque cartridge in housing
34-40 Nm (25-30 ft. lbs)

A307B Housing kit
Part Number **02-185355**

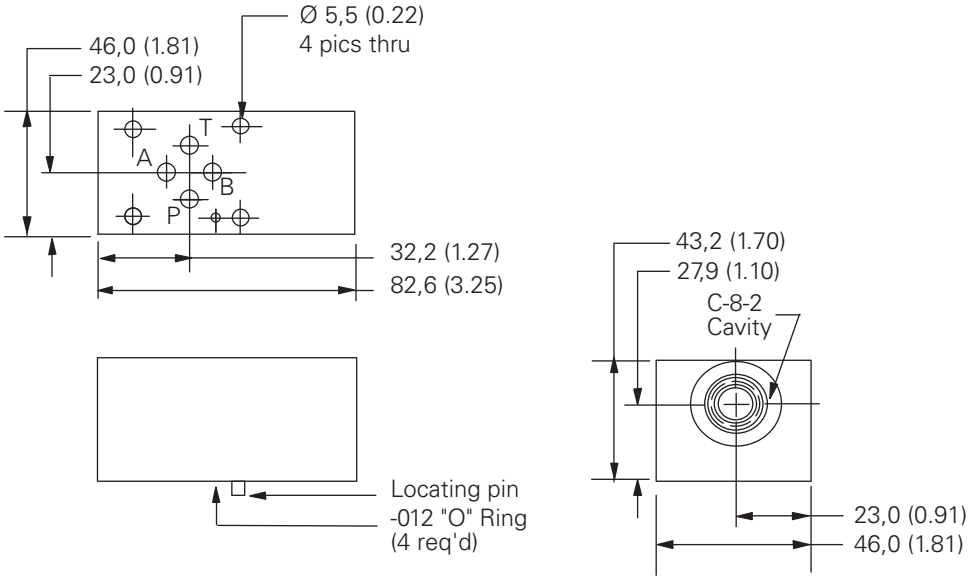

Typical cartridges	Function
CV3-8	Check valve on B, Free flow out

Where measurements are critical request certified drawings. We reserve the right to change specifications without notice.

Dimensions

ISO 4401-03/CETOP03 Housing kits

Dimensions

mm (inch)

Cavity porting

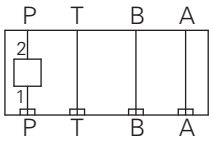

Torque cartridge in housing
34-40 Nm (25-30 ft. lbs)

A307P Housing Kit
Part Number **02-185356**

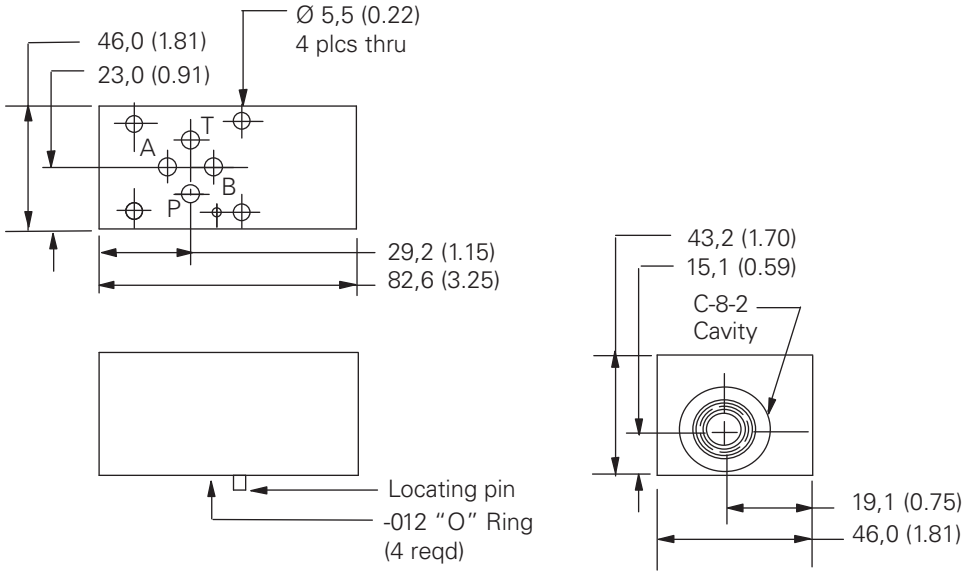

Typical cartridges	Function
CV3-8	Check valve on P

Dimensions

mm (inch)

Cavity porting

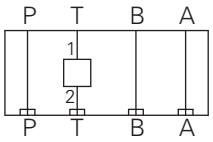

Torque cartridge in housing
48-54 Nm (35-40 ft. lbs)

A308T Housing kit
Part Number **02-185360**

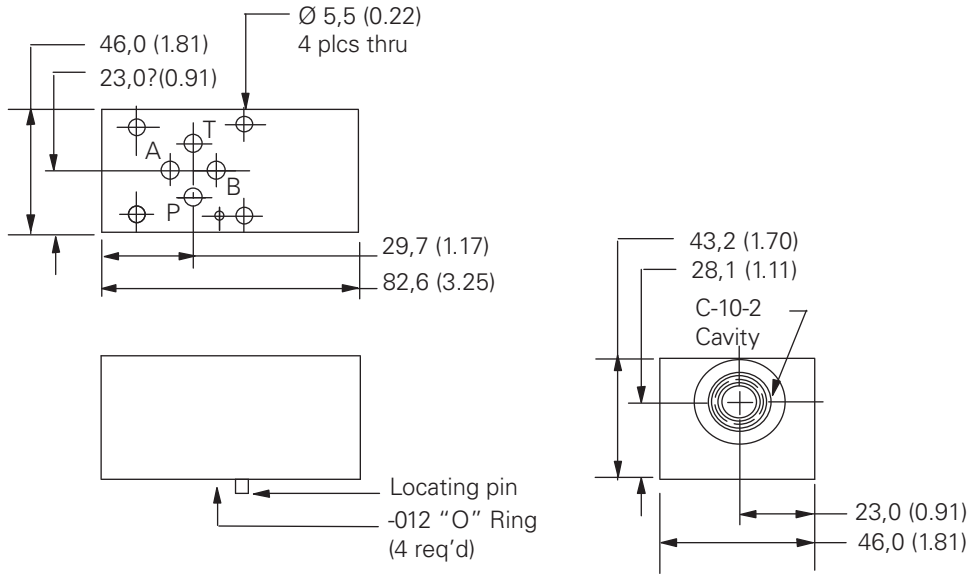

Typical cartridges	Function
CV3-10	Check valve on T

Where measurements are critical request certified drawings. We reserve the right to change specifications without notice.

Dimensions

mm (inch)

Cavity porting

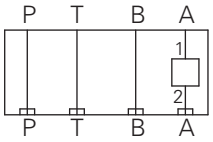

Torque cartridge in housing
48-54 Nm (35-40 ft. lbs)

Note:This housing may require the use of a spacer block 02-185273 depending upon cartridge valve selection.

A314A Housing kit
Part Number **02-185367**

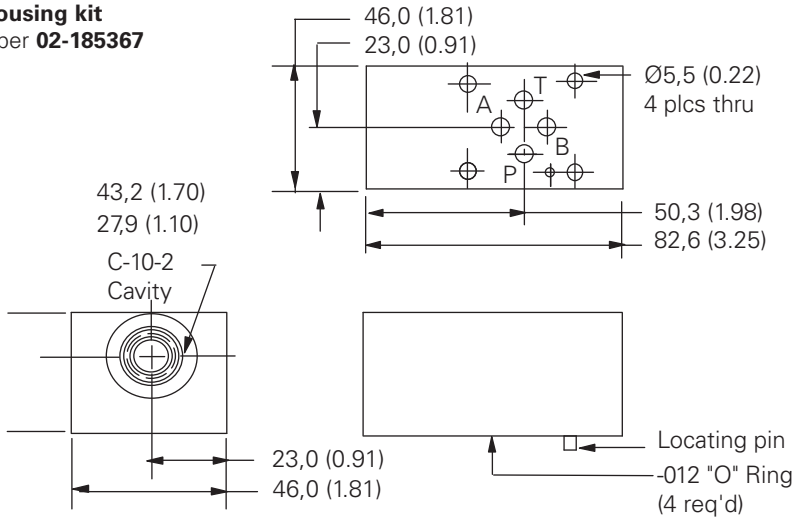

Typical cartridges	Function
CV3-10-P	Check valve on A, free flow out
FAR1-10	Flow regulator, pressure compensated and check, Meter in A
FCV7-10	Flow control and check, Meter out A
SBV11-10-C	Solenoid 2-way poppet type bi-directional load holding on A, normally closed
SBV11-10-O	Solenoid 2-way poppet type bi-directional load holding on A, normally open
SV3-10-C	Solenoid 2-way poppet type load holding on A, normally closed
SV3-10-O	Solenoid 2-way poppet type load holding on A, normally open

Cavity porting

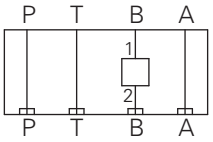

Torque cartridge in housing
48-54 Nm (35-40 ft. lbs)

Note:This housing may require the use of a spacer block 02-185273 depending upon cartridge valve selection.

A314A housing kit
Part Number **02-185368**

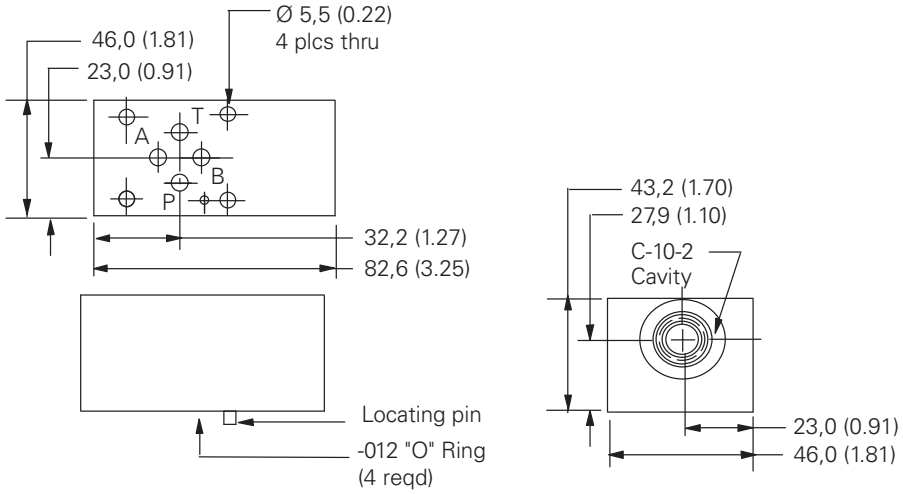

Typical cartridges	Function
CV3-10 *-P	Check valve on B, free flow out
FAR1-10	Flow regulator, pressure compensated and check, Meter in B
FCV7-10	Flow control and check, Meter out B
SBV11-10-C	Solenoid 2-way poppet type bi-directional load holding on B, normally closed
SBV11-10-O	Solenoid 2-way poppet type bi-directional load holding on B, normally open
SV3-10-C	Solenoid 2-way poppet type load holding on B, normally closed
SV3-10-O	Solenoid 2-way poppet type load holding on B, normally open

Where measurements are critical request certified drawings. We reserve the right to change specifications without notice.

Dimensions

ISO 4401-03/CETOP03 Housing kits

Dimensions

mm (inch)

Cavity porting

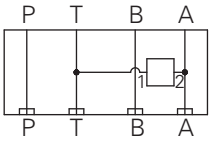

Torque cartridge in housing
48-54 Nm (35-40 ft. lbs)

Note: This housing may require the use of a spacer block 02-185273 depending upon cartridge valve selection.

A315A Housing kit
Part Number **02-185370**

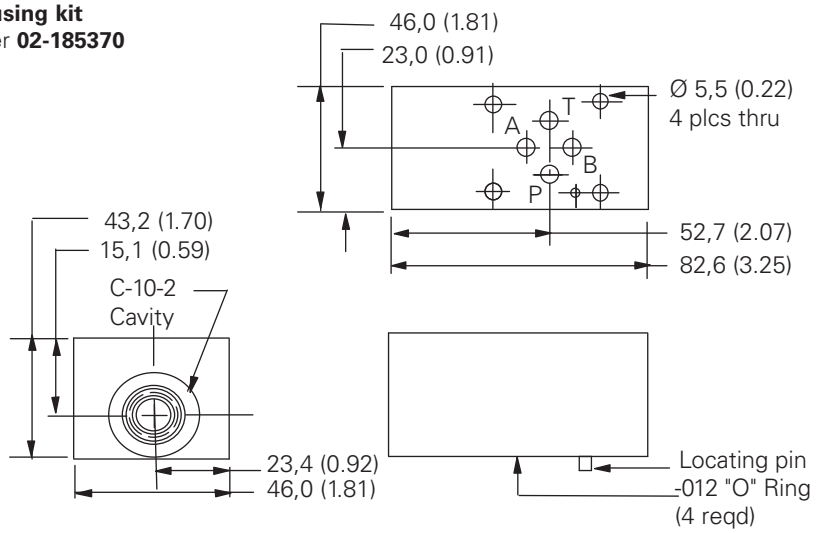

Typical cartridges	Function
SV3-10-C	Solenoid 2-way poppet type unload A-T normally closed
SV3-10-0	Solenoid 2-way poppet type unload A-T normally open
SV4-10-C	Solenoid 2-way spool type unload A-T normally closed
SV4-10-0	Solenoid 2-way spool type unload A-T normally open

Cavity porting

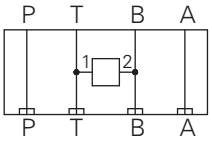

Torque cartridge in housing
48-54 Nm (35-40 ft. lbs)

Note: This housing may require the use of a spacer block 02-185273 depending upon cartridge valve selection.

A315B Housing kit
Part Number **02-185371**

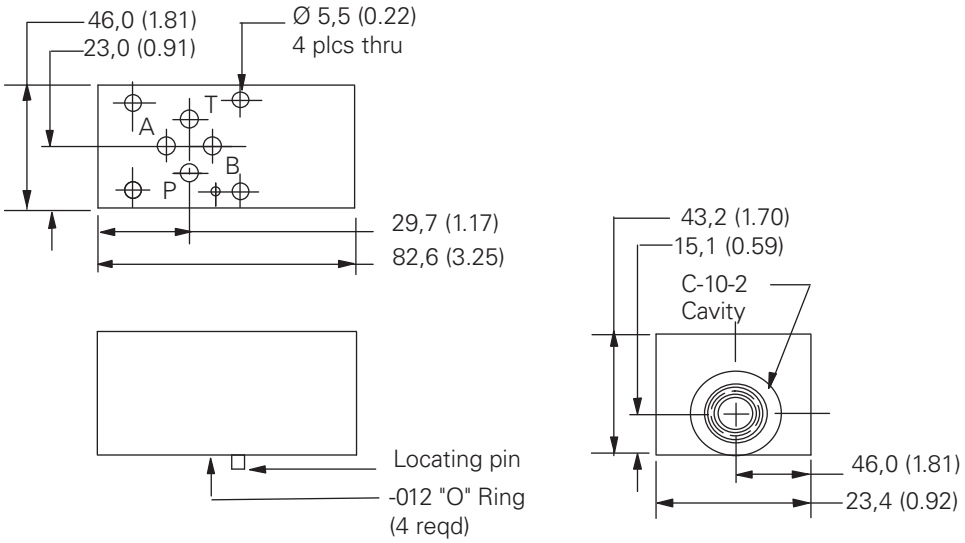

Typical cartridges	Function
SV3-10-C	Solenoid 2-way poppet type unload B-T normally closed
SV3-10-0	Solenoid 2-way poppet type unload B-T normally open
SV4-10-C	Solenoid 2-way spool type unload B-T normally closed
SV4-10-0	Solenoid 2-way spool type unload B-T normally open

L

Where measurements are critical request certified drawings. We reserve the right to change specifications without notice.

Dimensions

mm (inch)

Cavity porting

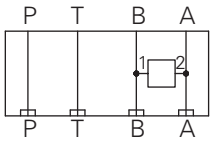

Torque cartridge in housing
48-54 Nm (35-40 ft. lbs)

A318W Housing kit

Part Number **02-185376**

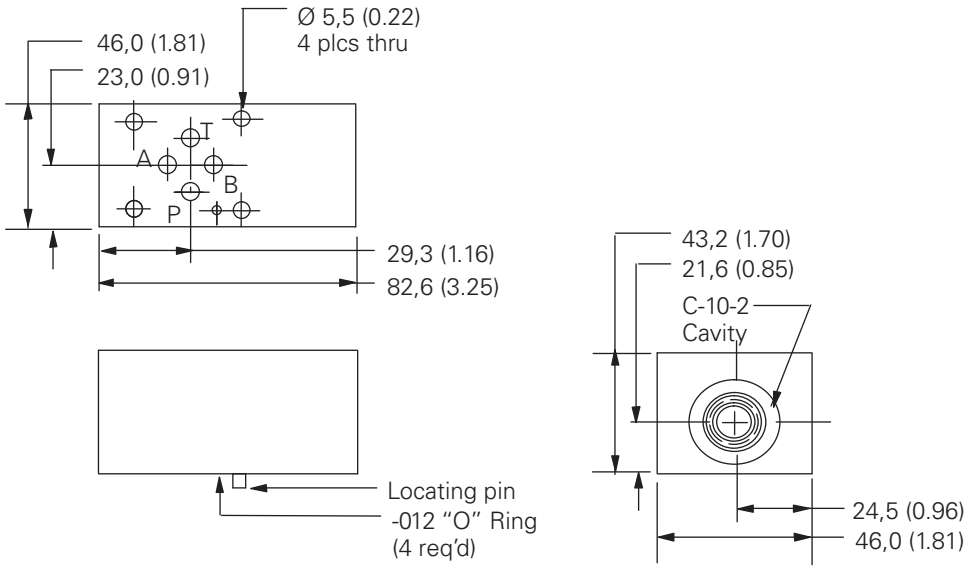

Typical cartridges	Function
SV4-10-C	Solenoid 2-way spool type locking A-B & B-A normally closed
SV4-10-O	Solenoid 2-way spool type locking A-B & B-A normally open
SV11-10-C	Solenoid 2-way poppet type bi-directional locking A-B & B-A normally closed
SV11-10-O	Solenoid 2-way poppet type bi-directional locking A-B & B-A normally open

Cavity porting

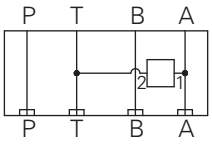

Torque cartridge in housing
48-54 Nm (35-40 ft. lbs)

Note: This housing may require the use of a spacer block 02-185273 depending upon cartridge valve selection.

A321A Housing kit

Part Number **02-185340**

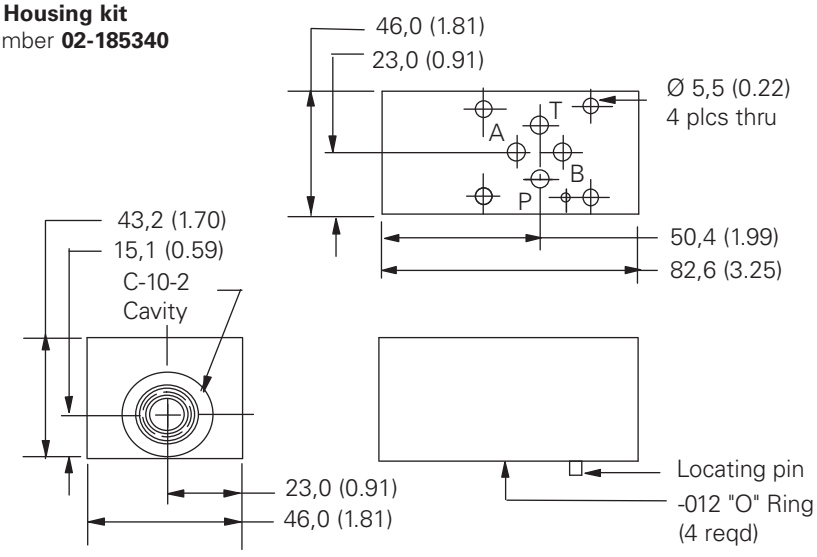

Typical cartridges	Function
ERV1-10	Proportional relief valve A-T
RV1-10	Relief valve A-T
RV5-10	Relief valve A-T

L

Where measurements are critical request certified drawings. We reserve the right to change specifications without notice.

Dimensions

ISO 4401-03/CETOP03 Housing kits

Dimensions

mm (inch)

Cavity porting

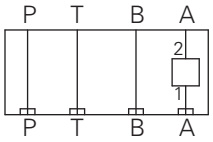

Torque cartridge in housing
48-54 Nm (35-40 ft. lbs)

Note: This housing may require the use of a spacer block 02-185273 depending upon cartridge valve selection.

A324A Housing kit
Part Number **02-185348**

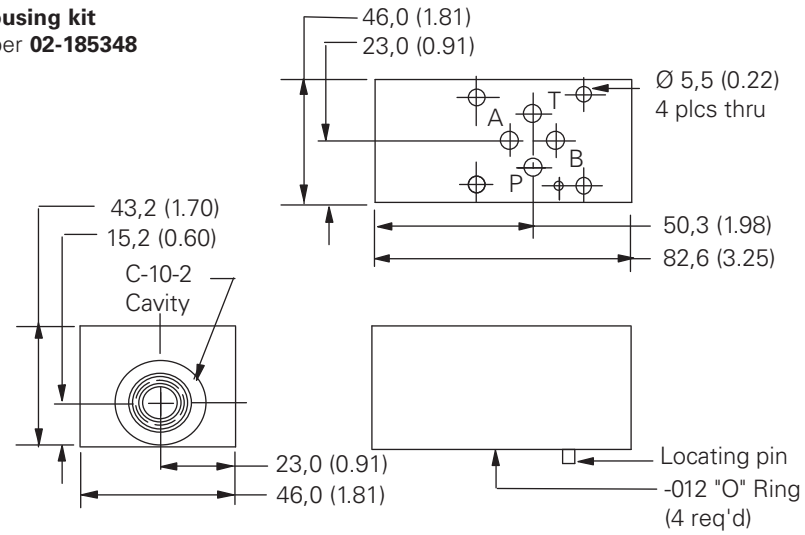

Typical cartridges	Function
FAR1-10	Flow regulator pressure compensated and check, meter out A
FCV7-10	Flow control and check, meter in A
SV3-10-C	Solenoid 2-way poppet type blocking on A, normally closed
SV3-10-O	Solenoid 2-way poppet type blocking on A, normally open
SV4-10-C	Solenoid 2-way spool type blocking on A, normally closed
SV4-10-O	Solenoid 2-way spool type blocking on A, normally open

Cavity porting

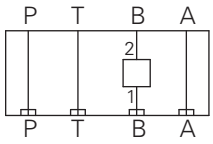

Torque cartridge in housing
48-54 Nm (35-40 ft. lbs)

A324B Housing kit
Part Number **02-185349**

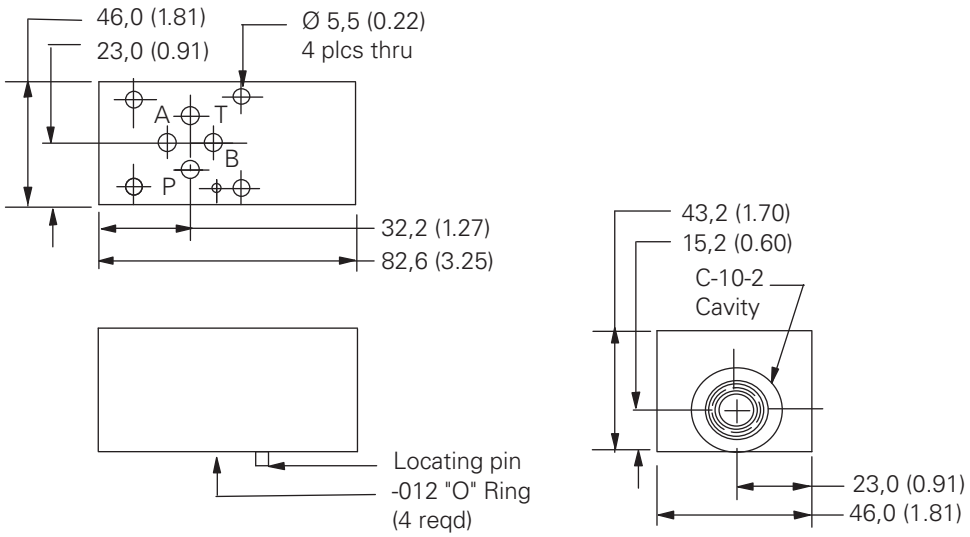

Typical cartridges	Function
FAR1-10	Flow regulator pressure compensated and check, meter out B
FCV7-10	Flow control and check, meter in B
SV3-10-C	Solenoid 2-way poppet type blocking on B, normally closed
SV3-10-O	Solenoid 2-way poppet type blocking on B, normally open
SV4-10-C	Solenoid 2-way spool type blocking on B, normally closed
SV4-10-O	Solenoid 2-way spool type blocking on B, normally open

L

Where measurements are critical request certified drawings. We reserve the right to change specifications without notice.

Dimensions

mm (inch)

Cavity porting

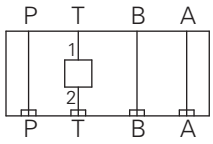

Torque cartridge in housing
34-40 Nm (25-30 ft. lbs)

A307T Housing kit

Part Number **02-185357**

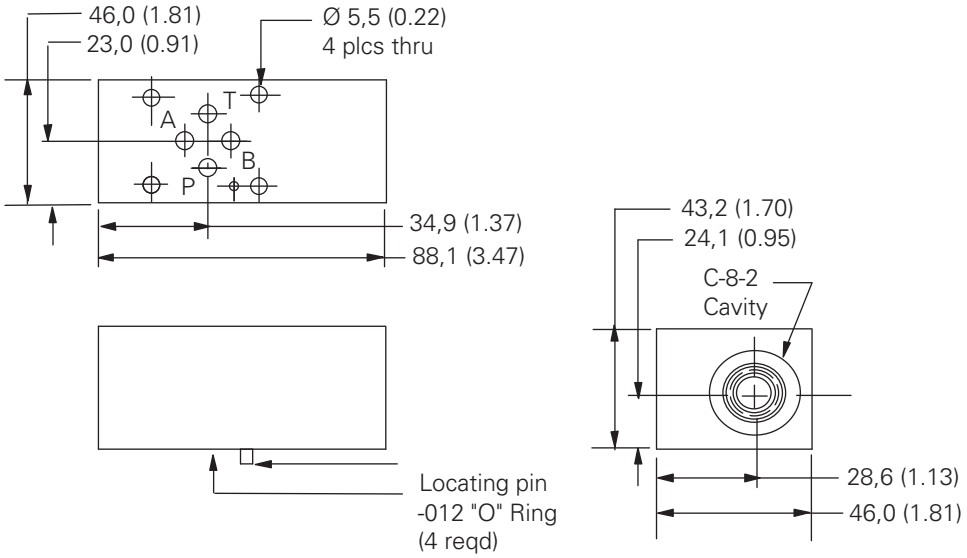

Typical cartridges	Function
CV3-8	Check valve on T

Cavity porting

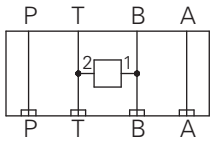

Torque cartridge in housing
48-54 Nm (35-40 ft. lbs)

A321B Housing kit

Part Number **02-185341**

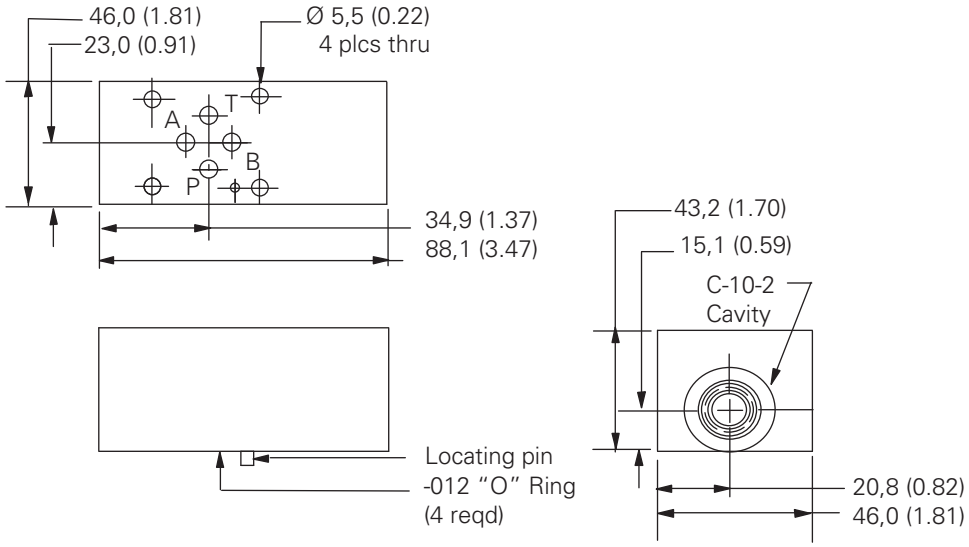

Typical cartridges	Function
ERV1-10	Proportional relief valve B-T
RV1-10	Relief valve B-T
RV5-20	Relief valve B-T

Where measurements are critical request certified drawings. We reserve the right to change specifications without notice.

Dimensions

ISO 4401-03/CETOP03 Housing kits

Dimensions

mm (inch)

Cavity porting

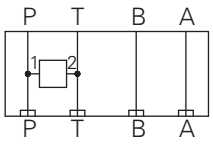

Torque cartridge in housing
48-54 Nm (35-40 ft. lbs)

Note: This housing may require the use of a spacer block 02-185273 depending upon cartridge valve selection.

A321P Housing kit

Part Number **02-185342**

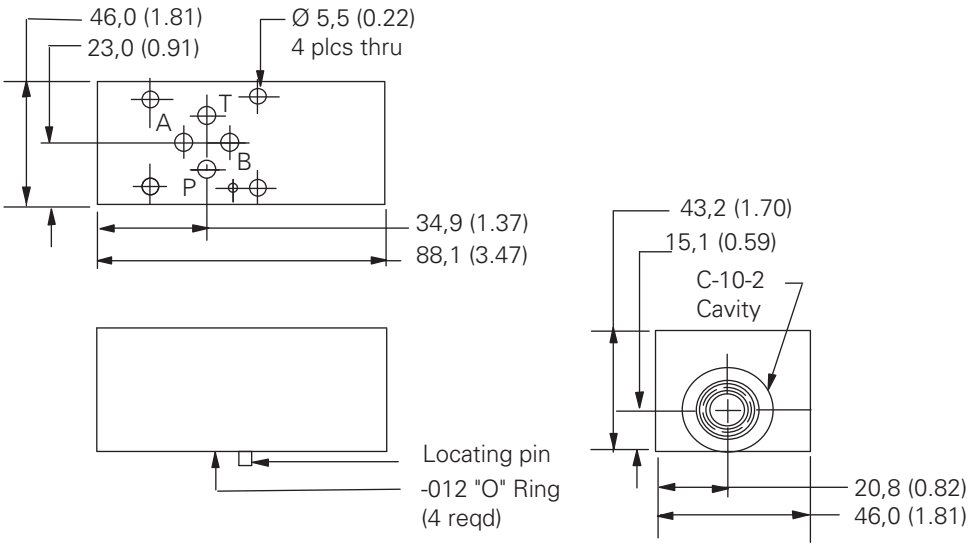

Typical cartridges	Function
CV16-10-P-0-5	Anti-cavitation check P-T
ERV1-10	Proportional relief valve P-T
RV1-10	Relief valve P-T
RV5-10	Relief valve P-T

Cavity porting

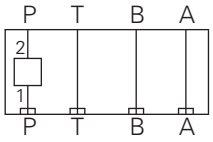

Torque cartridge in housing
48-54 Nm (35-40 ft. lbs)

Note: This housing may require the use of a spacer block 02-185273 depending upon cartridge valve selection.

A324P Housing kit

Part Number **02-185350**

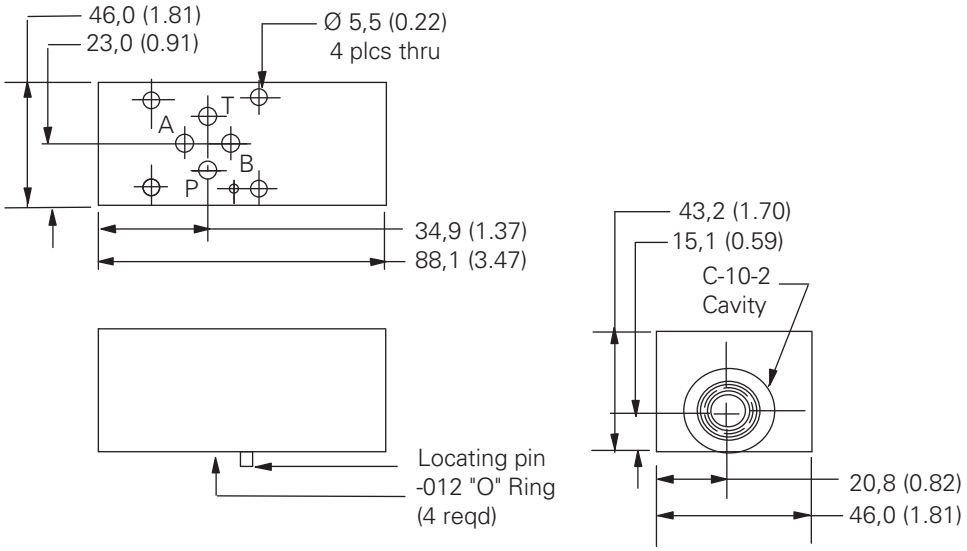

Typical cartridges	Function
CV3-10	Check valve on P
FAR1-10	Flow regulator pressure compensated, meter in P
NV1-10	Flow control, meter in P

L

Where measurements are critical request certified drawings. We reserve the right to change specifications without notice.

Dimensions

mm (inch)

Cavity porting

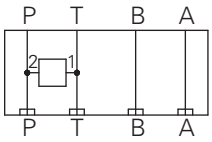

Torque cartridge in housing
48-54 Nm (35-40 ft. lbs)

Note: This housing may require the use of a spacer block 02-185273 depending upon cartridge valve selection.

A325P Housing kit
Part Number **02-185352**

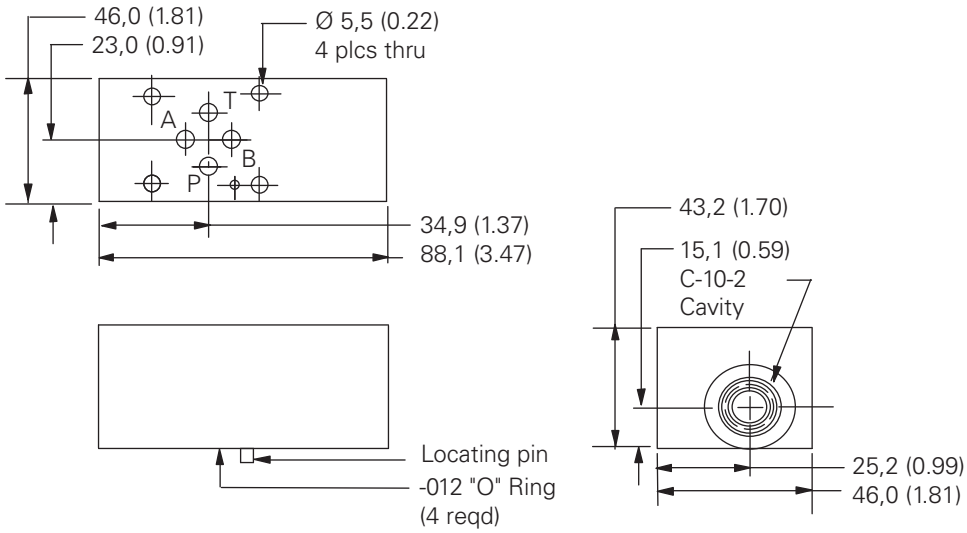

Typical cartridges	Function
SV3-10-C	Solenoid 2-way poppet type P-T, normally closed
SV3-10-O	Solenoid 2-way poppet type P-T, normally open
SV4-10-C	Solenoid 2-way spool type P-T, normally closed
SV4-10-O	Solenoid 2-way spool type P-T, normally open

L

Where measurements are critical request certified drawings. We reserve the right to change specifications without notice.

Dimensions

ISO 4401-03/CETOP03 Housing kits

Cavity porting

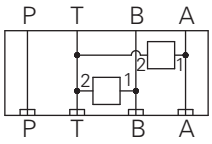

Torque cartridge in housing
34-40 Nm (25-30 ft. lbs)

A311W Housing kit
Part Number **02-185364**

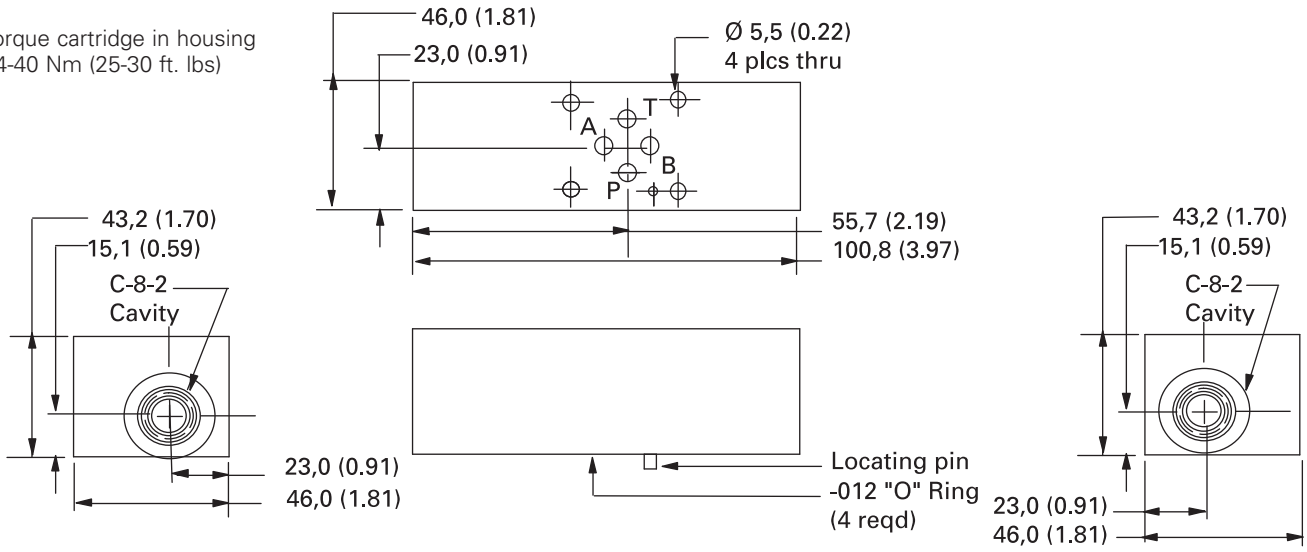

Typical cartridges	Function
1DR30	Dual relief valve A-T, B-T

L

Where measurements are critical request certified drawings. We reserve the right to change specifications without notice.

Dimensions
mm (inch)

A312W Housing kit
Part Number **02-185365**

Cavity porting

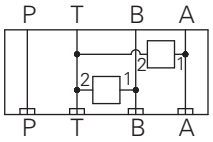

Torque cartridge in housing
48-54 Nm (35-40 ft. lbs)

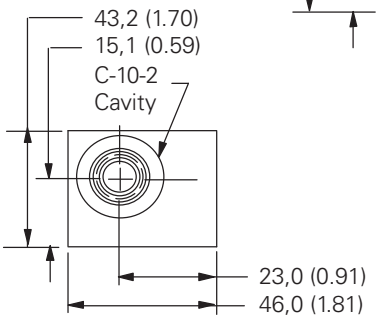

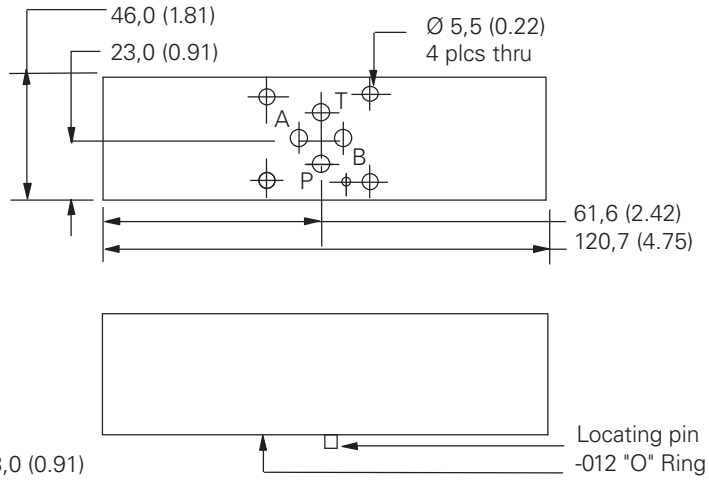

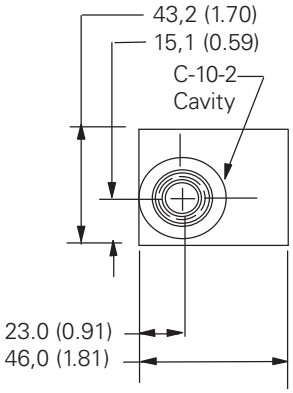

Typical cartridges	Function
RV1-10	Dual relief valve A-T, B-T
RV5-10	Dual relief valve A-T, B-T

Cavity porting

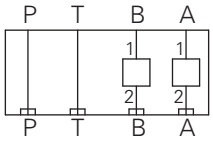

Torque cartridge in housing
48-54 Nm (35-40 ft. lbs)

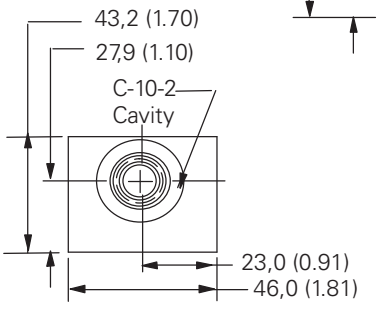

A314W Housing kit
Part Number **02-185369**

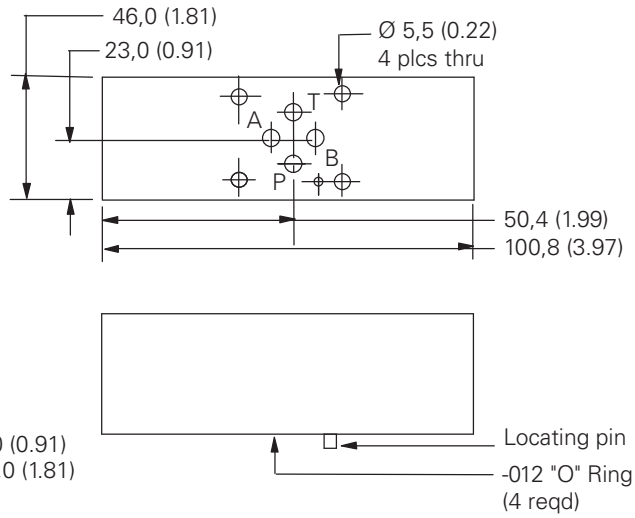

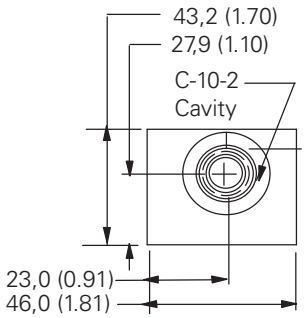

Note: This housing may require the use of a spacer block 02-185273 depending upon cartridge valve selection.

Typical cartridges	Function
FAR1-10	Flow regulator pressure compensated and check, meter in A & B
FCV7-10	Flow control and check, meter out A & B
SBV11-10-C	Solenoid 2-way poppet type bi-directional load holding on A & B, normally closed
SBV11-10-O	Solenoid 2-way poppet type bi-directional load holding on A & B, normally open
SV3-10-C	Solenoid 2 way poppet type load holding on A & B, normally closed
SV3-10-O	Solenoid 2 way poppet type load holding on A & B, normally open

Where measurements are critical request certified drawings. We reserve the right to change specifications without notice.

Dimensions

ISO 4401-03/CETOP03 Housing kits

Dimensions

mm (inch)

A324W Housing kit

Part Number **02-185351**

Cavity porting

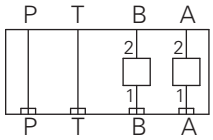

Torque cartridge in housing
48-54 Nm (35-40 ft. lbs)

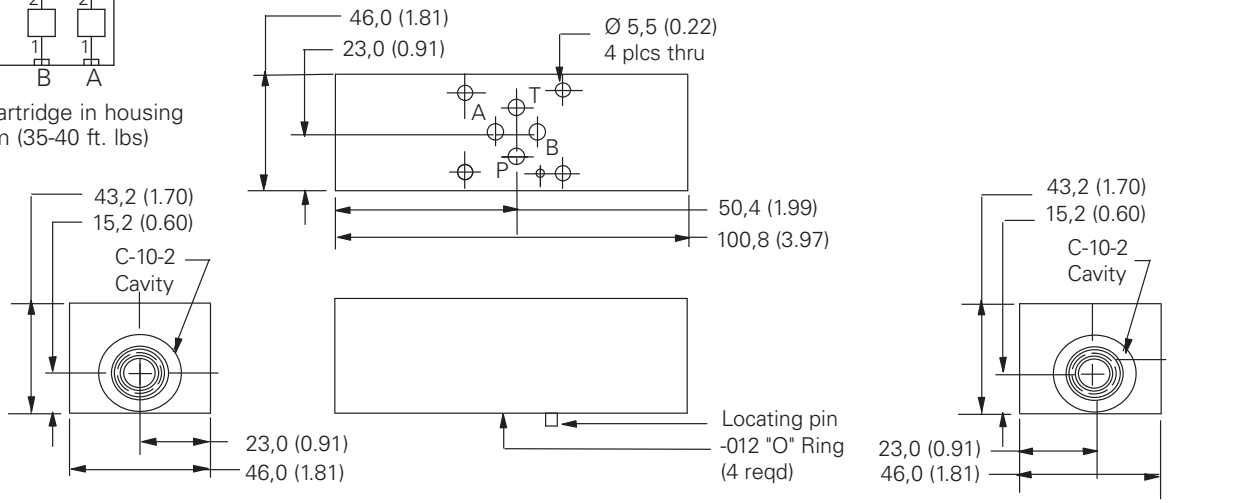

Typical cartridges	Function
FAR1-10	Flow regulator pressure compensated and check, meter out A & B
FCV7-10	Flow control & check, meter in A & B
SV3-10-C	Solenoid 2-way poppet type blocking on A & B normally closed
SV3-10-O	Solenoid 2-way poppet type blocking on A & B normally open
SV4-10-C	Solenoid 2-way spool type blocking on A & B normally closed
SV4-10-O	Solenoid 2-way spool type blocking on A & B normally open

Cavity porting

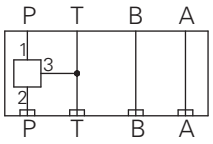

Torque cartridge in housing
48-54 Nm (35-40 ft. lbs)

A326P Housing kit

Part Number **02-185353**

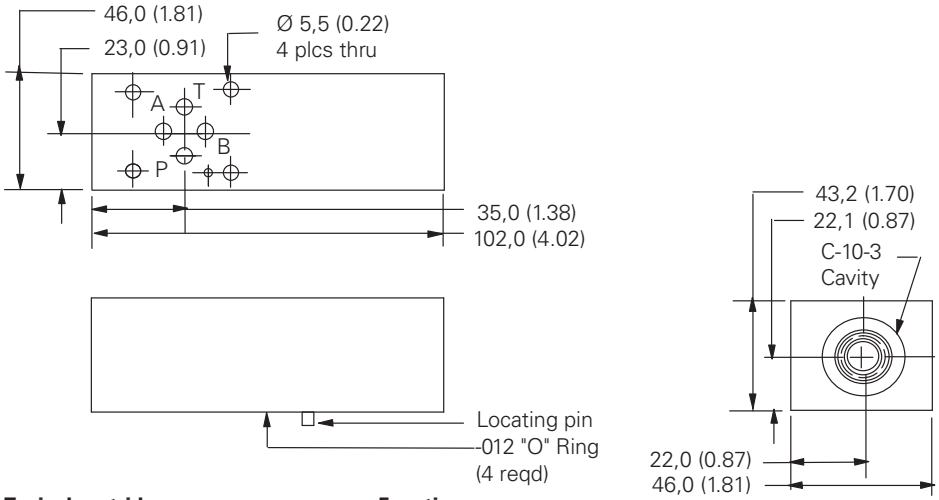

Typical cartridges	Function
MRV3-10-K-O	Manual rotary selector on P
PRV2-10	Reducing valve (P) drained to T
SV1-10-3	Solenoid 3-way selector on P
SV4-10-3	Solenoid 3-way selector on P

Where measurements are critical request certified drawings. We reserve the right to change specifications without notice.

Dimensions

mm (inch)

Cavity porting

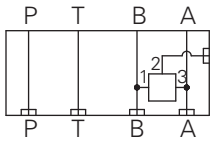

Torque cartridge in housing
34-40 Nm (25-30 ft. lbs)

A309W Housing kit

Part Number **02-185361**

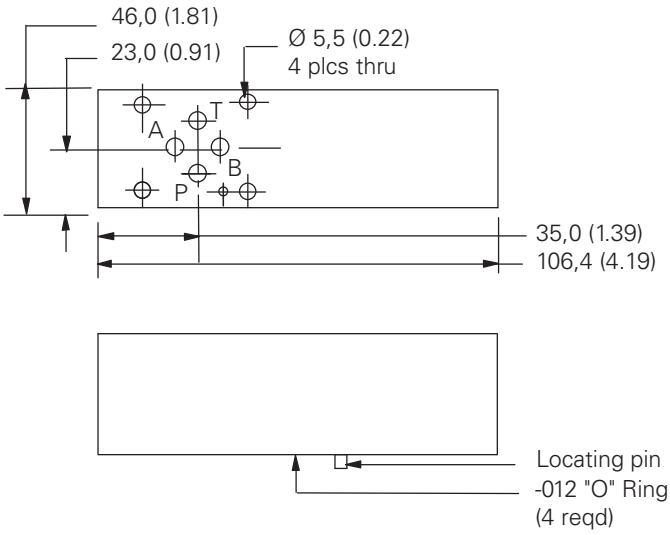

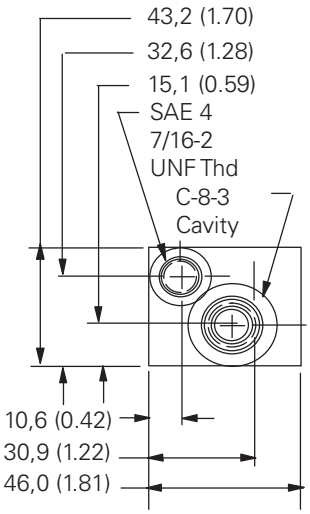

Typical cartridges	Function
DSV2-8-B-0	Shuttle valve A & B Output external

Cavity porting

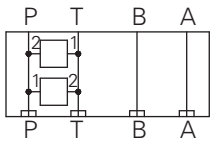

Torque cartridge in housing
C-8-2 34-40 Nm (25-30 ft. lbs)
C-10-2 48-54 Nm (35-40 ft. lbs)

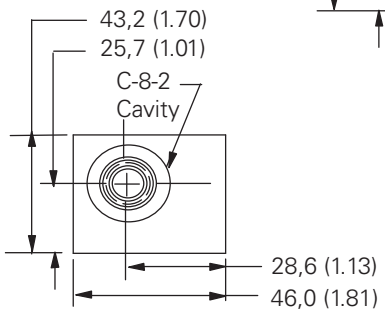

A322P Housing kit

Part Number **02-185344**

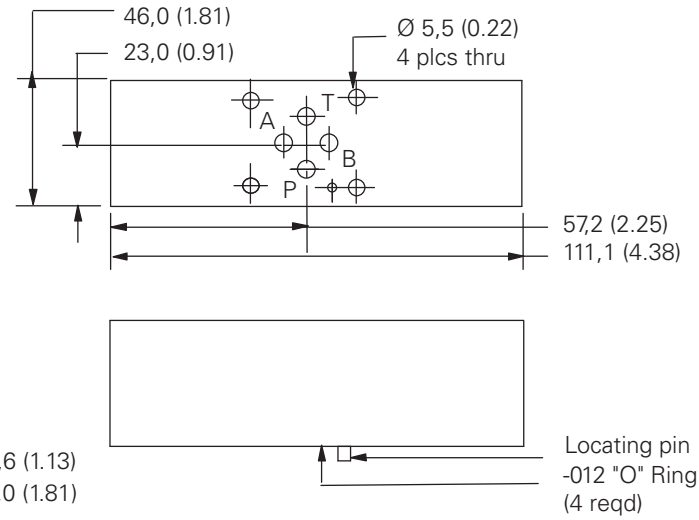

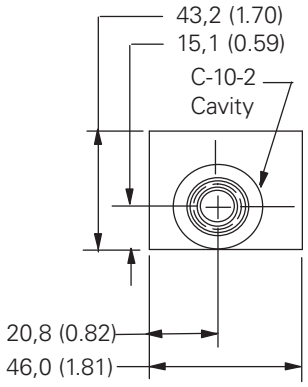

Typical cartridges	Function
SV5-8-0 & RV1-10	Solenoid control relief valve P-T, normally open
SV5-8-C & RV1-10	Solenoid control relief valve P-T, normally closed

Where measurements are critical request certified drawings. We reserve the right to change specifications without notice.

Dimensions

ISO 4401-03/CETOP03 Housing kits

Dimensions

mm (inch)

Cavity porting

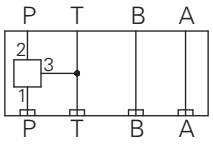

Torque cartridge in housing
48-54 Nm (35-40 ft. lbs)

A316P Housing kit

Part Number **02-185374**

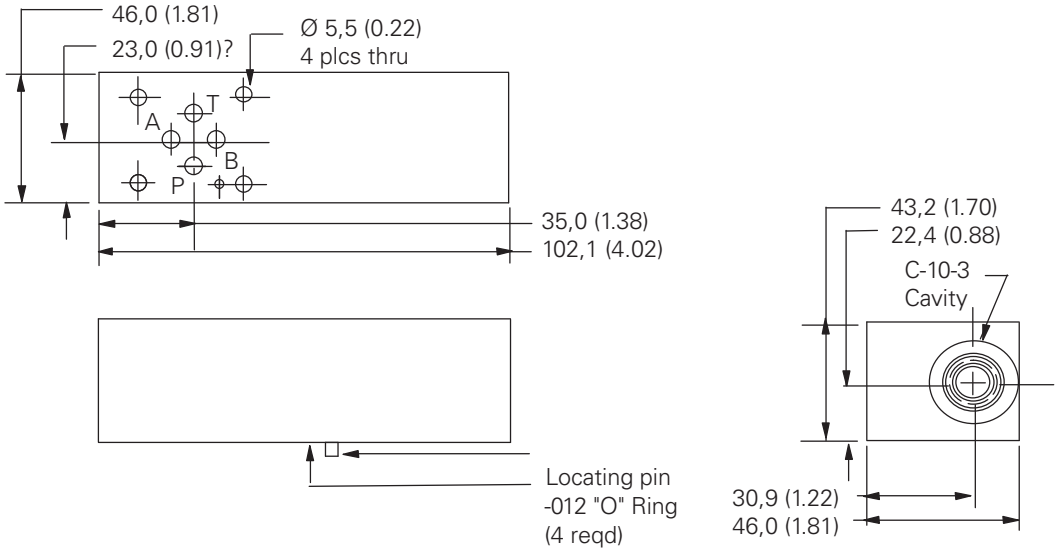

Typical cartridges	Function
PSV7-10	Sequence valve in to P

Cavity porting

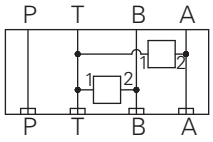

Torque cartridge in housing
34-40 Nm (25-30 ft. lbs)

A320T Housing kit

Part Number **02-185379**

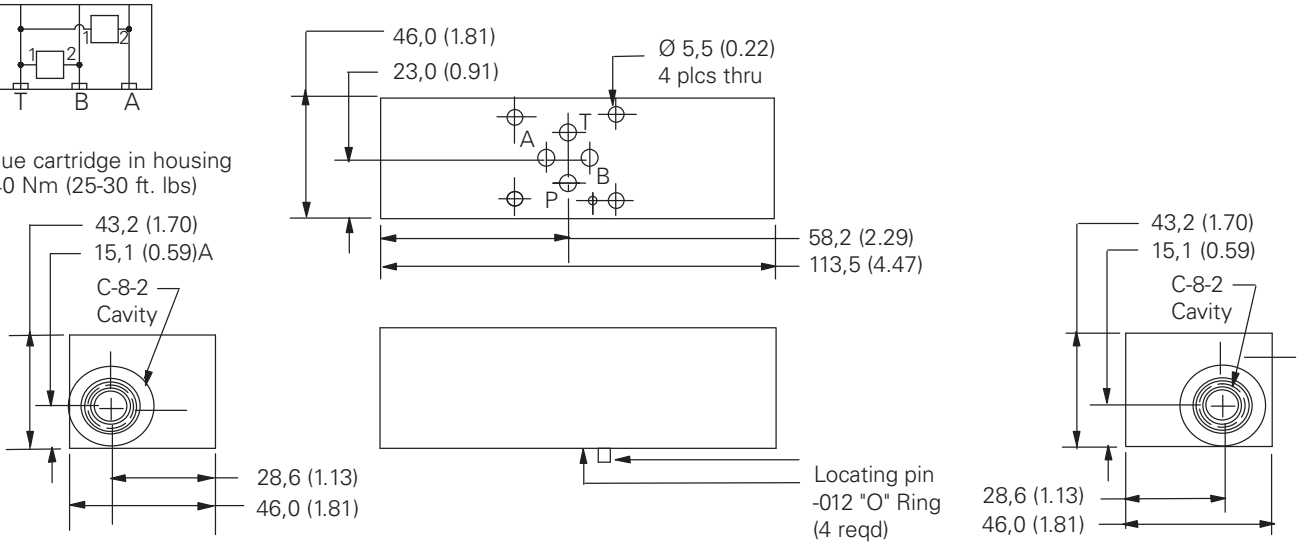

Typical cartridges	Function
CV3-8	Check valve on T to A & B

Where measurements are critical request certified drawings. We reserve the right to change specifications without notice.

Dimensions

mm (inch)

A321W Housing kit
Part Number **02-185343**

Cavity porting

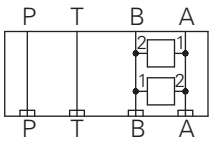

Torque cartridge in housing
48-54 Nm (35-40 ft. lbs)

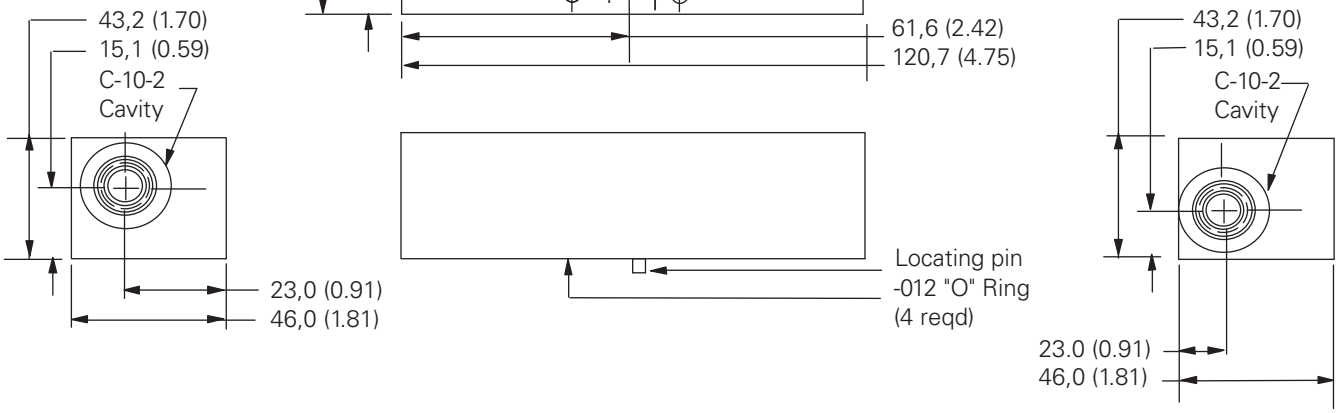

Typical cartridges	Function
RV1-10	Cross port relief valve A & B
RV5-10	Cross port relief valve A & B

Dimensions

ISO 4401-03/CETOP03 Housing kits

Dimensions

mm (inch)

Cavity porting

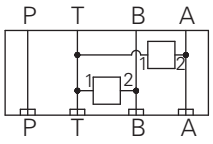

Torque cartridge in housing
48-54 Nm (35-40 ft. lbs)

A317A Housing kit

Part Number **02-185375**

Note: This housing may require the use of a spacer block 02-185273 depending upon cartridge valve selection.

Typical cartridges	Function
CV3-10	Check valve on T to A & B
SV3-10-C	Solenoid 2-way poppet type unload A & B-T, normally closed
SV3-10-O	Solenoid 2-way poppet type unload A & B-T, normally open
SV4-10-C	Solenoid 2-way spool type unload A & B-T, normally closed
SV4-10-O	Solenoid 2-way spool type unload A & B-T, normally open

Cavity porting

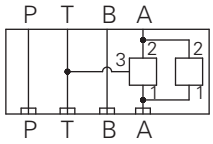

Torque cartridge in housing
48-54 Nm (35-40 ft. lbs)

A310A Housing kit

Part Number **02-185362**

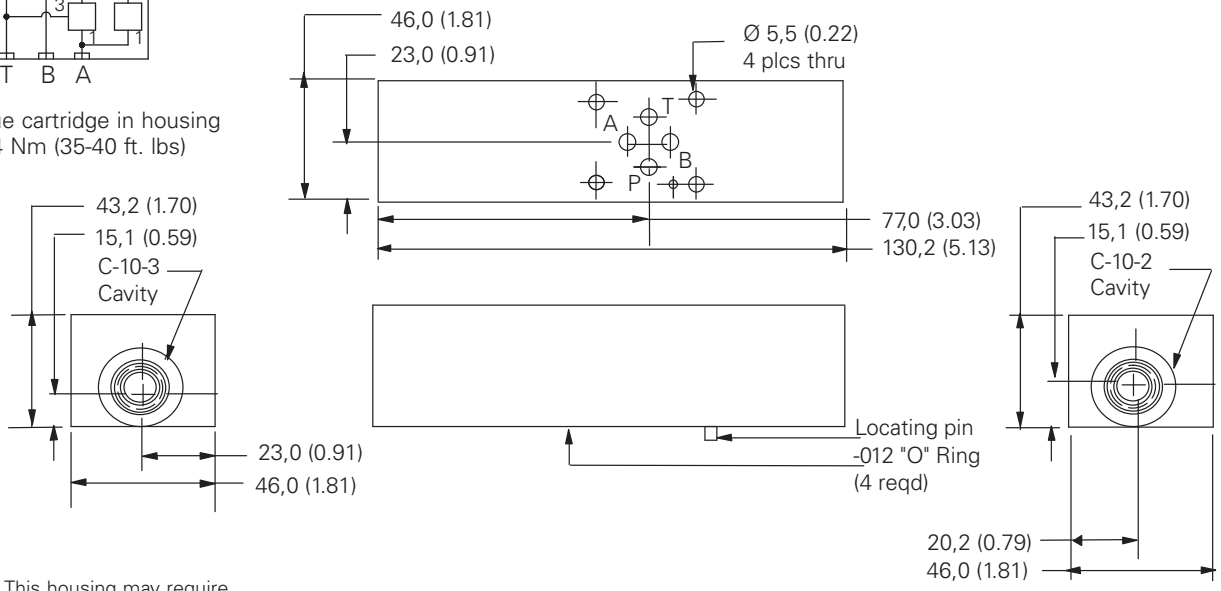

Note: This housing may require the use of a spacer block 02-185273 depending upon cartridge valve selection.

Typical cartridges	Function
PRV2-10 & CV3-10-P-3	Reducing on A drained to T reverse free flow check

Where measurements are critical request certified drawings. We reserve the right to change specifications without notice.

Dimensions

mm (inch)

A310B Housing kit

Part Number **02-185363**

Cavity porting

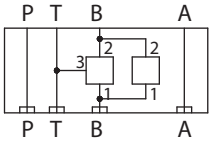

Torque cartridge in housing
48-54 Nm (35-40 ft. lbs)

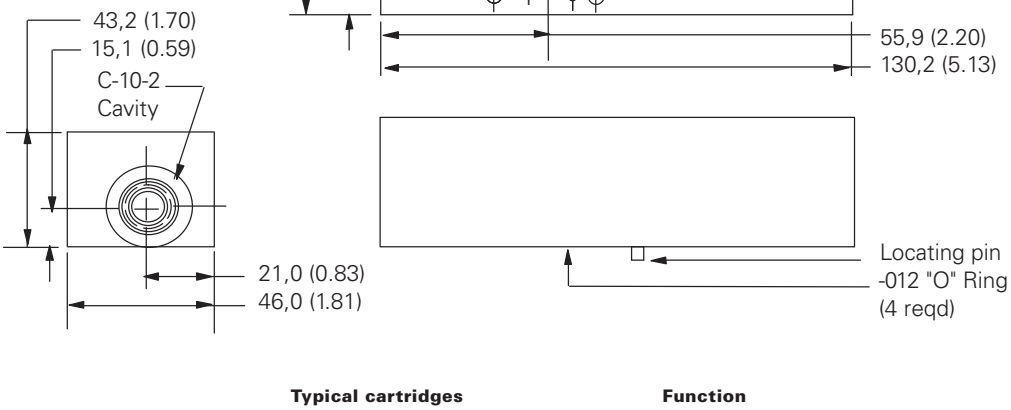

Typical cartridges	Function
PRV7-10 & CV3-10-P-0-3	Reducing on B drained to T reverse free flow check

A316A Housing kit

Part Number **02-185372**

Cavity porting

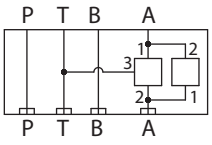

Torque cartridge in housing
48-54 Nm (35-40 ft. lbs)

Typical cartridges	Function
PSV7-10 & CV3-10-P-0-3	Sequence valve in to A reverse free flow check

Where measurements are critical request certified drawings. We reserve the right to change specifications without notice.

Dimensions

ISO 4401-03/CETOP03 Housing kits

Dimensions

mm (inch)

A316B Housing kit

Part Number **02-185373**

Cavity porting

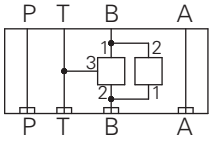

Torque cartridge in housing
48-54 Nm (35-40 ft. lbs)



Typical cartridges	Function
PSV7-10 & CV3-10-P-0-3	Sequence valve in to B reverse free flow check

Cavity porting

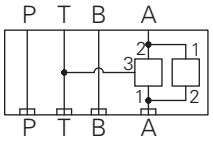

Torque cartridge in housing
48-54 Nm (35-40 ft. lbs)

A319A Housing kit

Part Number **02-185377**

Typical cartridges	Function
PSV7-10 & CV3-10-P-0-3	Sequence valve out of A reverse free flow check

Where measurements are critical request certified drawings. We reserve the right to change specifications without notice.

Dimensions

mm (inch)

A319B Housing kit

Part Number **02-185378**

Cavity porting

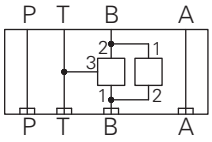

Torque cartridge in housing
48-54 Nm (35-40 ft. lbs)

Typical cartridges	Function
PSV7-10 & CV3-10-P-0-3	Sequence valve out of B reverse free flow check

A313P Housing kit

Part Number **02-185366**

Cavity porting

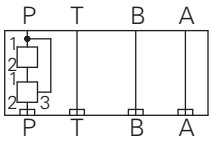

Torque cartridge in housing
48-54 Nm (35-40 ft. lbs)

Typical Cartridges	Function
EPV-10 & DPS2-10-F-F-0-160	Proportional flow control pressure compensated on P

Where measurements are critical request certified drawings. We reserve the right to change specifications without notice.

Dimensions

ISO 4401-03/CETOP03 Housing kits

Dimensions

mm (inch)

A309P Housing kit

Part Number **02-185381**

Cavity porting

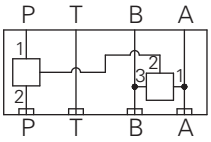

Torque cartridge in housing
C-8-3 34-40 Nm (25-30 ft. lbs)
C-10-3 48-54 Nm (35-40 ft. lbs)

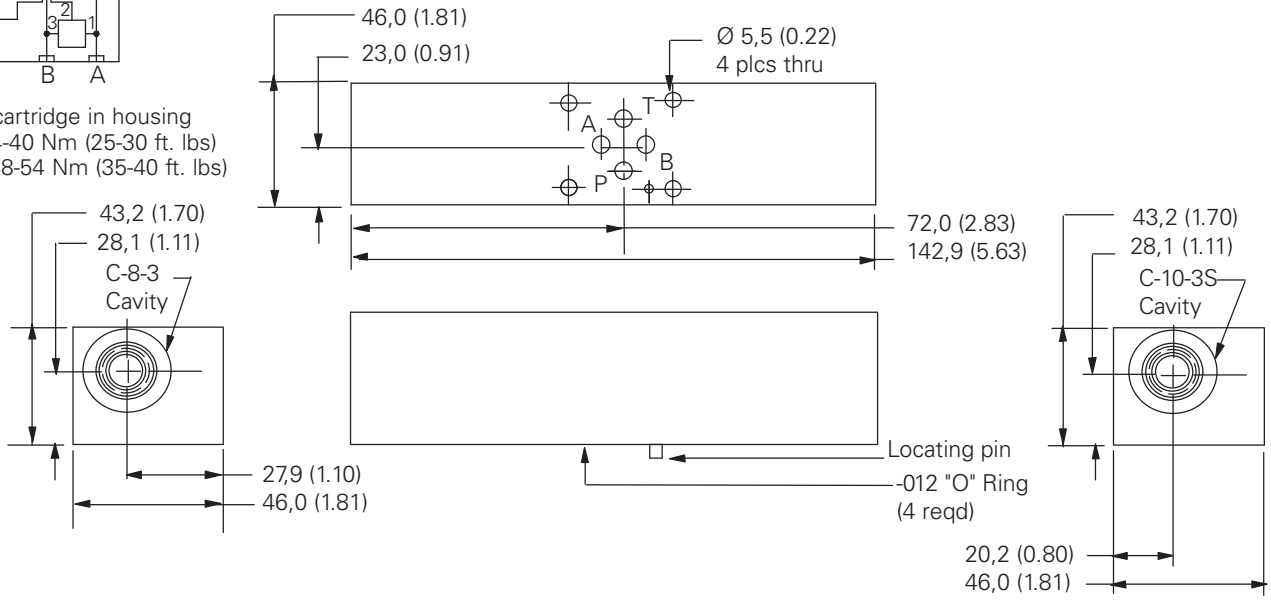

Typical cartridges	Function
DPS2-10-F-F-O-* & DSV2-8-B-O	Pressure compensator restrictive on P with shuttle sense from A & B

Cavity porting

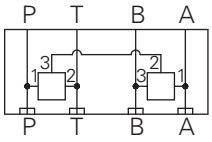

Torque cartridge in housing
C-8-3 34-40 Nm (25-30 ft. lbs)
C-10-3 48-54 Nm (35-40 ft. lbs)

A319P Housing kit

Part Number **02-185382**

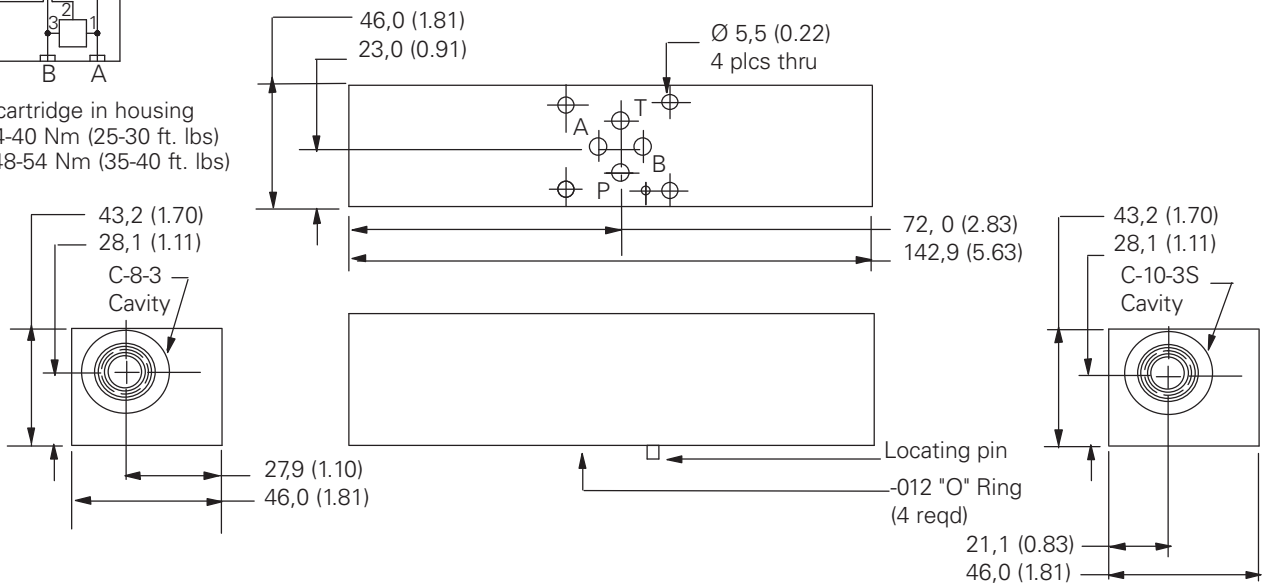

Typical cartridges	Function
DPS2-10-P-F-O-* & DSV2-8-B-O	Pressure compensator bypass to T with shuttle sense from A & B

Where measurements are critical request certified drawings. We reserve the right to change specifications without notice.

Dimensions

mm (inch)

A323A Housing kit

Part Number 6025820-001

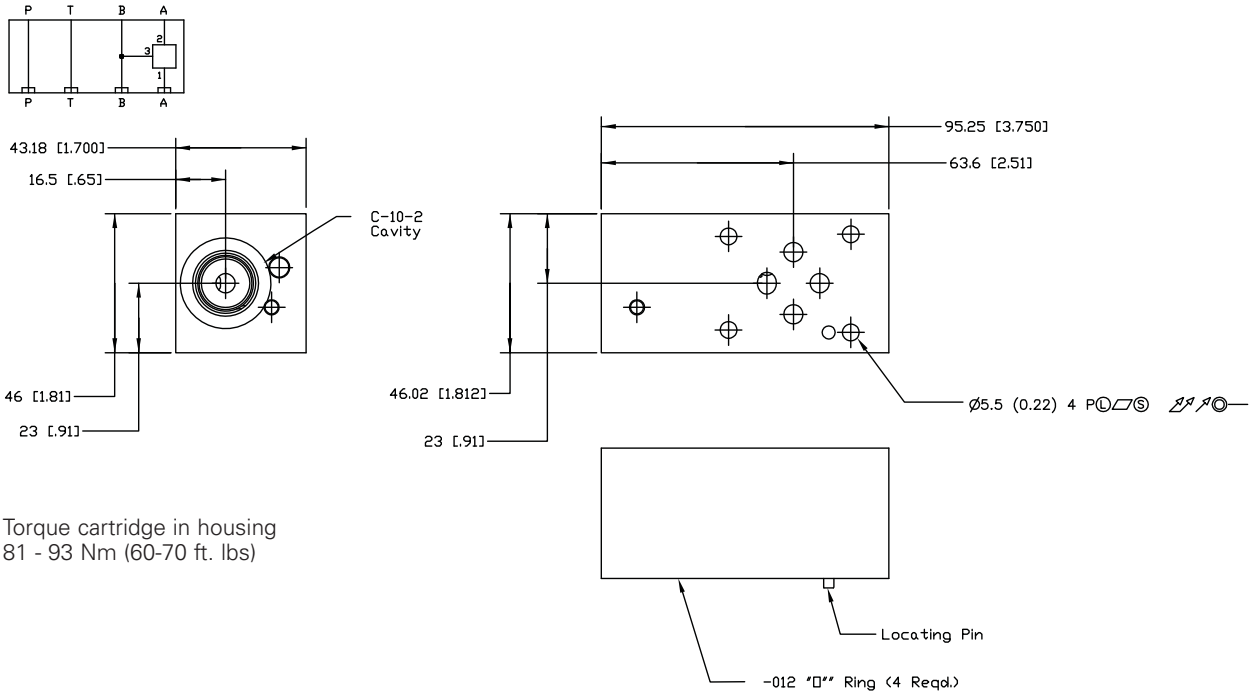

Torque cartridge in housing
81 - 93 Nm (60-70 ft. lbs)

Typical cartridges	Function
4CK30	PO Check Valve on A and Pilot from B
1CE30	Counterbalance Valve on A and Pilot from B

Dimensions

mm (inch)

A323B Housing kit

Part Number 6025821-001

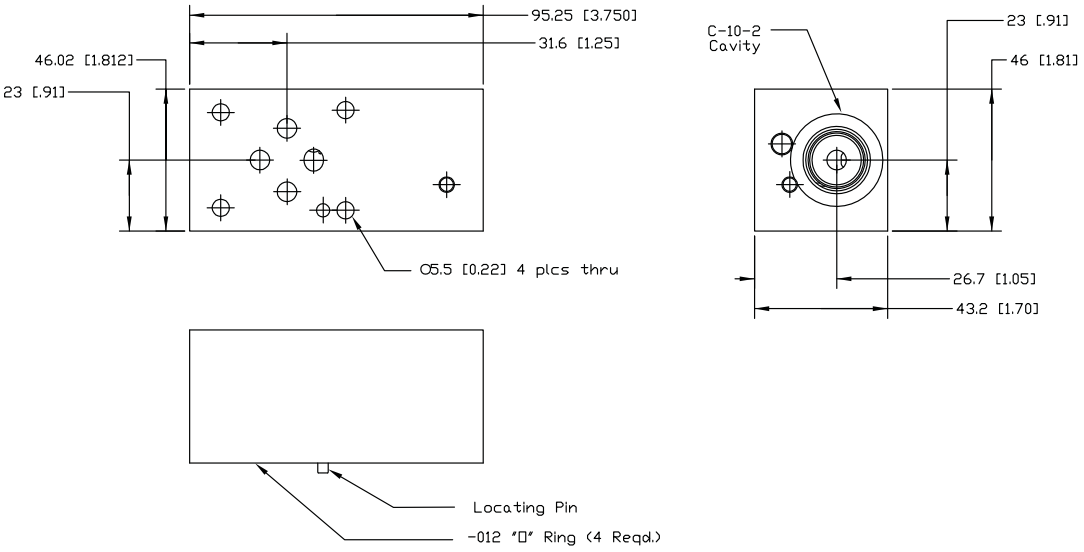

Typical Cartridges	Function
4CK30	PO Check Valve on B and Pilot from A
1CE30	Counterbalance Valve on B and Pilot from A

L

Dimensions

ISO 4401-03/CETOP03 Housing kits

Dimensions

mm (inch)

A323W - Housing Kit

Part Number 6025822-001

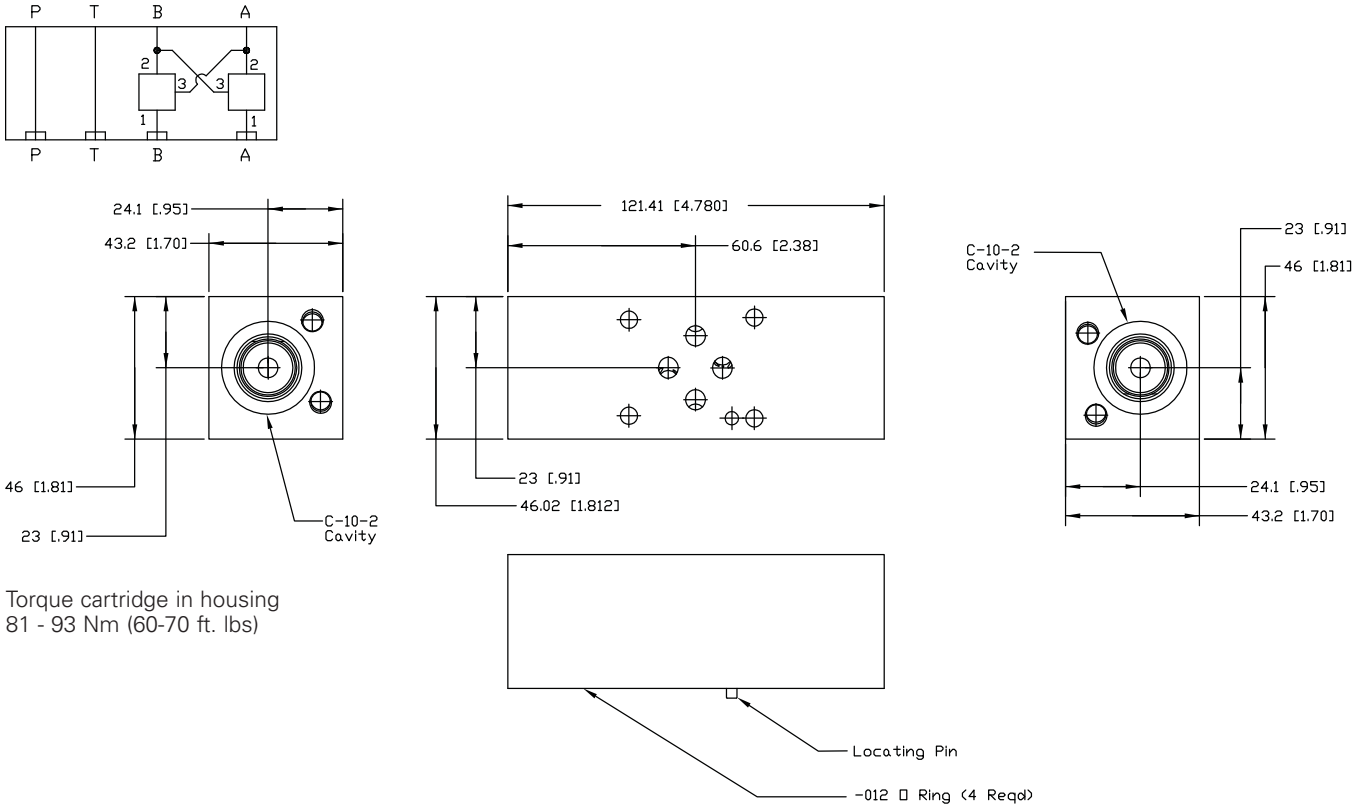

Torque cartridge in housing
81 - 93 Nm (60-70 ft. lbs)

Typical cartridges	Function
4CK30	PO Check Valve on A and B Cross Piloted
1CE30	Counterbalance Valve on A and B Cross Piloted

L

Powering Business Worldwide

Sandwich valves

CETOP05 Sandwich valve bodies and assemblies
for applications up to 210 bar (3000 psi)



L

Where measurements are critical request certified drawings. We reserve the right to change specifications without notice.

Pressure control functions

Sandwich valves
ISO 05/DO5/NG 10/CETOP5 series

⚠ Caution
Sandwich valve flow ratings are limited by the ratings of individual cartridges. Consult cartridge valve literature.

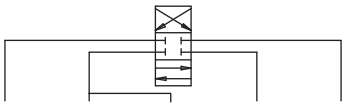

Function	Functional symbol	Model code	Housing kit	
Relief valve P-T	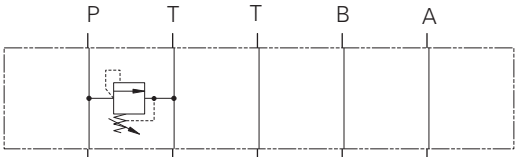	RV1-12**A521P**/****00	Model Part No. Cartridge Cartridge data sheet Cavity	A521P 6021302-001 RV1-12 Section E C-12-2
Relief valve A-T	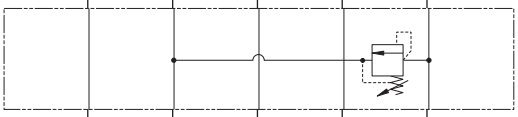	RV1-12**A521A**/****00	Model Part No. Cartridge Cartridge data sheet Cavity	A521A 6021299-001 RV1-12 Section E C-12-2
Relief valve B-T	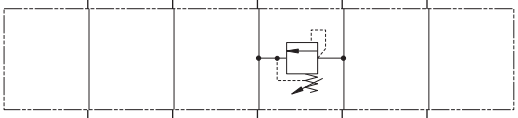	RV1-12**A521B**/****00	Model Part No. Cartridge Cartridge data sheet Cavity	A521B 6021295-001 RV1-12 Section E C-12-2
Relief valve P-T		RV11-12**A521P**/***00	Model Part No. Cartridge Cartridge data sheet Cavity	A521P 6021302-001 RV11-12 Section E C-12-2
Relief valve A-T	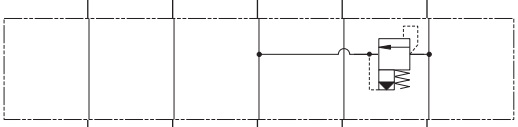	RV11-12**A521A**/***00	Model Part No. Cartridge Cartridge data sheet Cavity	A521A 6021299-001 RV11-12 Section E C-12-2
Relief valve B-T	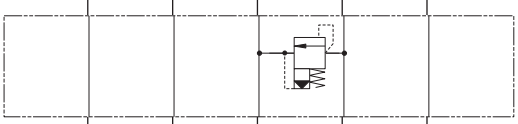	RV11-12**A521B**/***00	Model Part No. Cartridge Cartridge data sheet Cavity	A521B 6021295-001 RV11-12 Section E C-12-2
Dual Relief valve A-T, B-T	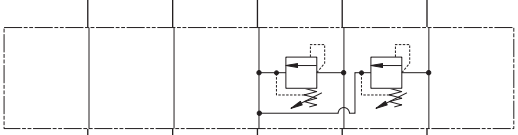	RV1-10**A511W A**/**B**/**	Model Part No. Cartridge Cartridge data sheet Cavity	A511W 6021337-001 RV1-10 [qty 2] Section E C-10-2 [qty 2]
Dual Relief valve A-T, B-T	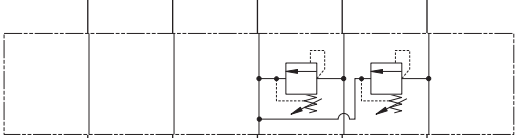	RV1-12**A512W A**/**B**/**	Model Part No. Cartridge Cartridge data sheet Cavity	A512W 6021184-001 RV1-12 [qty 2] Section E C-12-2 [qty 2]

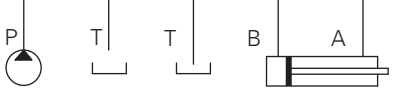

Where measurements are critical request certified drawings. We reserve the right to change specifications without notice.

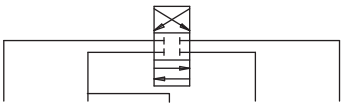

Function	Functional symbol	Model code	Housing kit	
Dual Relief Valve A-T, B-T	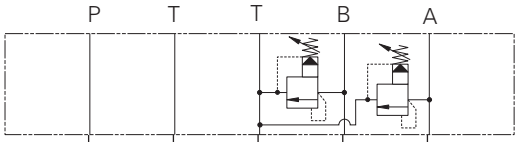	RV11-12**A512W A**/**B**/**	Model Part No. Cartridge Cartridge data sheet Cavity	A512W 6021184-001 RV11-12 [qty2] Section E C-12-2 [qty2]
Cross Port Relief Valve A-B		RV3-12**A521WA**/**B**/**	Model Part No. Cartridge Cartridge data sheet Cavity	A521W 6021158-001 RV3-12 [qty2] Section E C-12-2 [qty2]
Cross Port Relief Valve A-B		RV11-12**A521WA**/**B**/**	Model Part No. Cartridge Cartridge data sheet Cavity	A521W 6021158-001 RV11-12 [qty2] Section E C-12-2 [qty2]
Reducing Valve on P Drained to T		PRV12-12**A526P**/***00	Model Part No. Cartridge Cartridge data sheet Cavity	A526W 6021329-001 PRV12-12 Section E C-12-3
Reducing Valve on B Drained to T Reverse FF Check	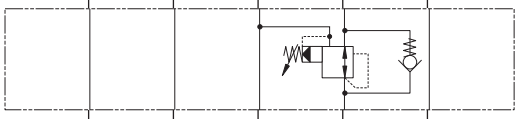	PRV12-12** A510B**/***00	Model Part No. Cartridge Cartridge data sheet Cavity	A510B 6021352-001 PRV12-12/CV11-12 Section E & G C-12-3/C-12-2

Where measurements are critical request certified drawings. We reserve the right to change specifications without notice.

Check functions

Sandwich valves
ISO 05/DO5/NG 10/CETOP5 series

⚠ Caution
Sandwich valve flow ratings are limited by the ratings of individual cartridges. Consult cartridge valve literature.

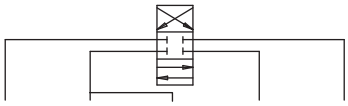

Function	Functional symbol	Model code	Housing kit	
Check Valve on P	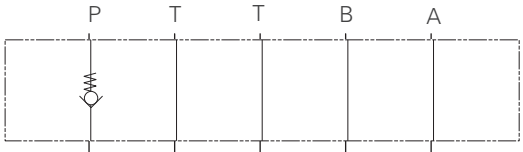	CV11-12*P A524P***00	Model Part No. Cartridge Cartridge data sheet Cavity	A524P 6021186-001 CV11-12 Section G C-12-2
Check Valve on A Free Flow Out		CV3-10*P A507A***00	Model Part No. Cartridge Cartridge data sheet Cavity	A507A 6021185-001 CV3-10 Section G C-10-2
Check Valve on A Free Flow out		CV11-12*P A514A ***00	Model Part No. Cartridge Cartridge data sheet Cavity	A514A 6021288-001 CV11-12 Section G C-12-2
Check in A Piloted from B		4CK90*A523A**00	Model Part No. Cartridge Cartridge data sheet Cavity	A523A 6021282-001 4CK90 Section G A12336
Check in A & B Cross Piloted	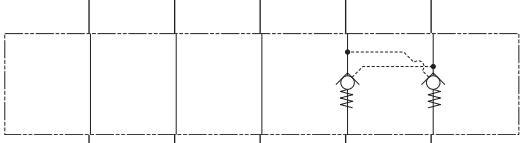	4CK90*A523W**00	Model Part No. Cartridge Cartridge data sheet Cavity	A523W 5999906-001 4CK90 (qty2) Section G A12336 (qty 2)
Check Valve on B Free Flow out		CV11-12*P A514B ***00	Model Part No. Cartridge Cartridge data sheet Cavity	A514B 6021273-001 CV11-12 Section G C-12-2
Shuttle Valve A and B Output External		DSV2-8*B A509W 00	Model Part No. Cartridge Cartridge data sheet Cavity	A509W 6021189-001 DSV2-8-B-0 Section G C-8-3

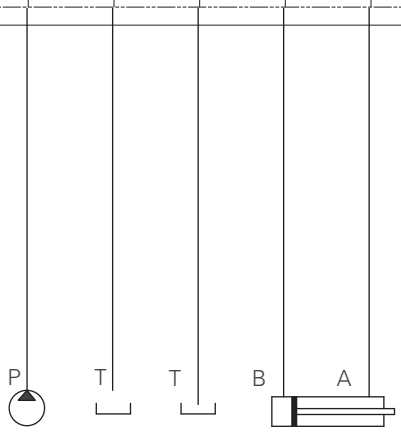

L

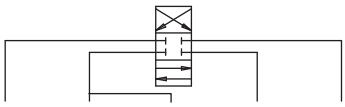

Function	Functional symbol	Model code	Housing kit	
Flow Regulator Pressure Compensated and Check Meter in P	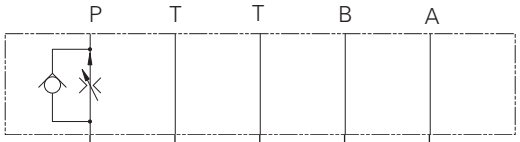	FAR1-12** A524P ***00	Model Part No. Cartridge Cartridge data sheet Cavity	A524P 6021186-001 FAR1-12 Section H C-12-2
Flow Regulator Pressure Compensated and Check Meter in A		FAR1-12** A514A ***00	Model Part No. Cartridge Cartridge data sheet Cavity	A514A 6021288-001 FAR1-12 Section H C-12-2
Flow Regulator Pressure Compensated and Check meter out A		FAR1-12** A524A ***00	Model Part No. Cartridge Cartridge data sheet Cavity	A524A 6021181-001 FAR1-12 Section H C-12-2
Flow Regulator Pressure Compensated and Check meter in B	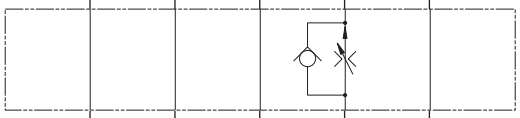	FAR1-12** A514B ***00	Model Part No. Cartridge Cartridge data sheet Cavity	A514B 6021273-001 FAR1-12 Section H C-12-2
Flow Regulator Pressure Compensated and Check meter out B	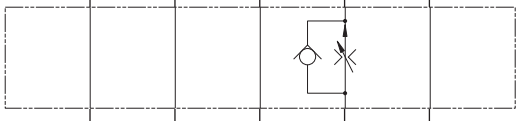	FAR1-12** A524B ***00	Model Part No. Cartridge Cartridge data sheet Cavity	A524B 6021182-001 FAR1-12 Section H C-12-2
Flow Regulator Pressure Compensated and Check meter in A & B	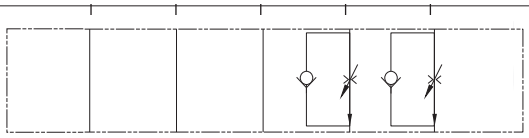	FAR1-12** A514W A***B***00	Model Part No. Cartridge Cartridge data sheet Cavity	A514W 4998388-001 FAR1-12 qty 2 Section H C-12-2 qty 2
Flow Regulator Pressure Compensated and Check meter out A & B	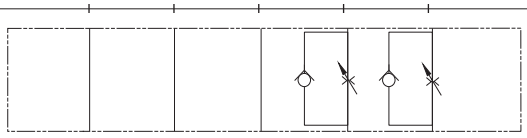	FAR1-12** A524W A***B***00	Model Part No. Cartridge Cartridge data sheet Cavity	A524W 4998389-001 FAR1-12 qty 2 Section H C-12-2 qty 2

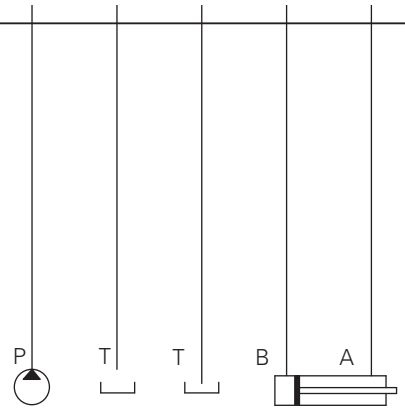

Where measurements are critical request certified drawings. We reserve the right to change specifications without notice.

Solenoid control functions

Sandwich valves
ISO 05/DO5/NG 10/CETOP5 series

⚠ Caution
Sandwich valve flow ratings are limited by the ratings of individual cartridges. Consult cartridge valve literature.

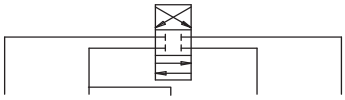

Function	Functional symbol	Model code	Housing kit	
Solenoid 2/2 Poppet type (P-T) Normally Closed		SV3-12*C A525P *** *00	Model Part No. Cartridge Cartridge data sheet Cavity	A525P 6021293-001 SV3-12-C Section A C-12-2
Solenoid 2/2 Poppet type (P-T) Normally Open		SV3-12*0 A525P *** *00	Model Part No. Cartridge Cartridge data sheet Cavity	A525P 6021273-001 SV3-12-0 Section A C-12-2
Solenoid 2/2 Poppet type Blocked on A Normally Closed		SV3-12*C A524A *** *00	Model Part No. Cartridge Cartridge data sheet Cavity	A524A 6021181-001 SV3-12-C Section A C-12-2
Solenoid 2/2 Poppet type Blocked on A Normally Open		SV3-12*0A524A *** *00	Model Part No. Cartridge Cartridge data sheet Cavity	A524A 6021181-001 SV3-12-0 Section A C-12-2
Poppet type Blocked on B Normally Closed	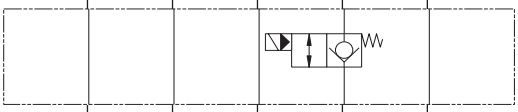	SV3-12*C A524B *** *00	Model Part No. Cartridge Cartridge data sheet Cavity	A524B 6021182-001 SV3-12-C Section A C-12-2
Poppet type Blocked on B Normally Open	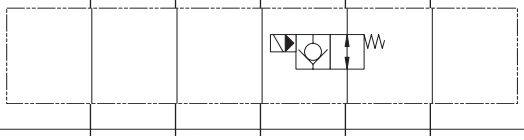	SV3-12*0 A524B *** *00	Model Part No. Cartridge Cartridge data sheet Cavity	A524B 6021182-001 SV3-10-0 Section A C-12-2
Poppet type Load Holding on A & B Normally Closed	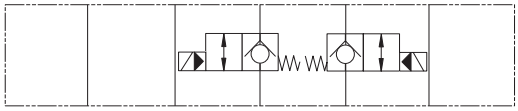	SV3-12*C A524W *** *00	Model Part No. Cartridge Cartridge data sheet Cavity	A524W 4998379-001 SV3-12-C qty 2 Section A C-12-2 qty 2
Poppet type Load Holding on A & B Normally Closed	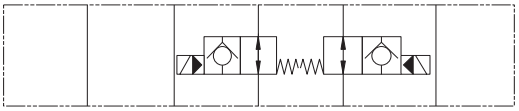	SV3-12*0 A524W*** *00	Model Part No. Cartridge Cartridge data sheet Cavity	A524W 4998379-001 SV3-12-0 qty 2 Section A C-12-2 qty 2
Poppet type Load Holding on A Normally Closed	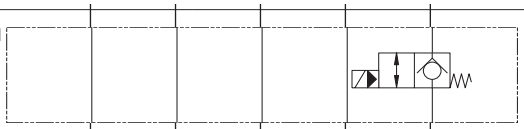	SV3-12*C A514A *** *00	Model Part No. Cartridge Cartridge data sheet Cavity	A514A 6021288-001 SV3-12-C Section A C-12-2
Poppet type Load Holding on A Normally Open		SV3-12*0 A514A *** *00	Model Part No. Cartridge Cartridge data sheet Cavity	A514A 6021288-001 SV3-12-0 Section A C-12-2
Poppet type Load Holding on B Normally Open	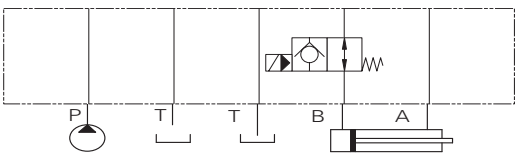	SV3-12*0 * A514A ***00	Model Part No. Cartridge Cartridge data sheet Cavity	A514A 6021288-001 SV3-10-0 Section A C-12-2

Where measurements are critical request certified drawings. We reserve the right to change specifications without notice.

⚠ Caution

Sandwich valve flow ratings are limited by the ratings of individual cartridges. Consult cartridge valve literature.

Function	Functional symbol	Model code	Housing kit	
Poppet type Load Holding on B Normally Closed	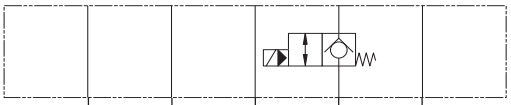	SV3-12-C A514B *** *00	Model Part No. Cartridge Cartridge data sheet Cavity	A514B 6021273-001 SV3-12-C Section A C-12-2
Poppet type Load Holding on B Normally Open	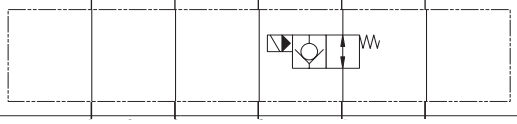	**SV3-12*0 A514B *** *00**	**Model Part No. Cartridge Cartridge data sheet Cavity**	**A514B 6021273-001 SV3-12-0 Section A C-12-2**
Poppet type Load Holding on A & B Normally Closed	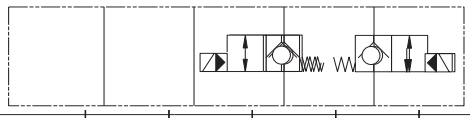	**SV3-12*C A514W *** *00**	**Model Part No. Cartridge Cartridge data sheet Cavity**	**A514W 4998388-001 SV3-12-C qty 2 Section A C-12-2 qty 2**
Poppet type Load Holding on A & B Normally Closed	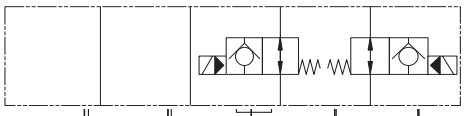	**SV3-12*0 A514W*** *00**	**Model Part No. Cartridge Cartridge data sheet Cavity**	**A514W 4998388-001 SV3-12-0 qty 2 Section A C-12-2 qty 2**
Poppet Bi-Directional Load Holding on A Normally Closed	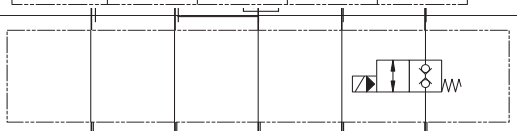	SBV11-10*C A514A *** *00	Model Part No. Cartridge Cartridge data sheet Cavity	A514A 6021181-001 SBV11-12-C Section A C-12-2
Poppet Bi-Directional Load Holding on A Normally Open		SBV11-10*0 A514A *** *00	Model Part No. Cartridge Cartridge data sheet Cavity	A514A 6021181-001 SBV11-12-0 Section A C-12-2
Poppet Bi-Directional Load Holding on B Normally Closed	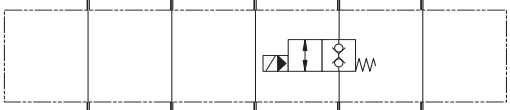	SBV11-10*C A514B *** *00	Model Part No. Cartridge Cartridge data sheet Cavity	A514B 6021273-001 SBV11-12-C Section A C-12-2
Poppet Bi-Directional Load Holding on B Normally Open	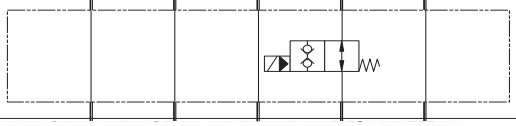	SBV11-10*0 A514B *** *00	Model Part No. Cartridge Cartridge data sheet Cavity	A514B 6021273-001 SBV11-12-0 Section A C-12-2
Poppet Bi-Directiona Load Holdinc on A & B Normally Clc	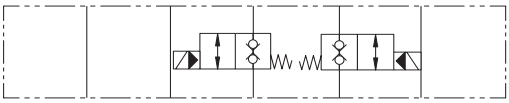	SBV11-12*C A514W *** *00	Model Part No. Cartridge Cartridge data sheet Cavity	A514W 4998388-001 SBV11-12-C qty 2 Section A C-12-2 qty 2
Poppet Bi-Directional Load Holding on A & B Normally Open	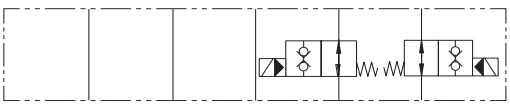	SBV11-12*0 A514W *** *00	Model Part No. Cartridge Cartridge data sheet Cavity	A514W 4998388-001 SBV11-12-0 qty 2 Section A C-12-2 qty 2
Poppet Bi-Directional Blocked A and B Normally Closed		SBV11-12*C A518W *** *00	Model Part No. Cartridge Cartridge data sheet Cavity	A518W 6021277-001 SBV11-12-C Section A C-12-2
Poppet Bi-Directional Blocked A and B Normally Open		SBV11-12*0 A518W *** *00	Model Part No. Cartridge Cartridge data sheet Cavity	A518W 6021277-001 SBV11-12-0 Section A C-12-2
Solenoid 3-Way Selector on P	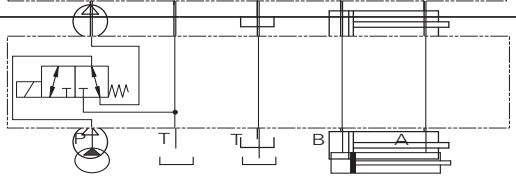	SV11-12*3 A526P *** *00	Model Part No. Cartridge Cartridge data sheet Cavity	A526P 6021329-001 SV11-12-3 Section A C-12-3

Where measurements are critical request certified drawings. We reserve the right to change specifications without notice.

Load control functions

⚠ Caution
Sandwich valve flow ratings are limited by the ratings of individual cartridges. Consult cartridge valve literature.

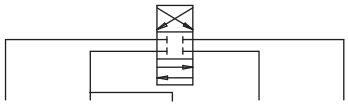

Function	Functiona slymbol	Model code	Housing kit
Overcenter in A Pilot from B	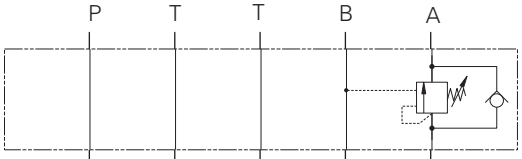	1CE90 * A523AA 20S/*B20S/** **	Model A523A Part No. 6021282-001 Cartridge 1CE90 Cartridge Data Sheet Section F Cavity A12336
Overcenter in A & B Cross Piloted	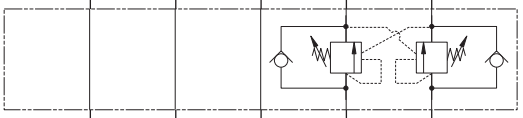	1CE90 * A523WA 20S/*B20S/** **	Model A523W Part No. 5999906-001 Cartridge 1CE90 qty 2 Cartridge Data Sheet Section F Cavity A12336 qty 2

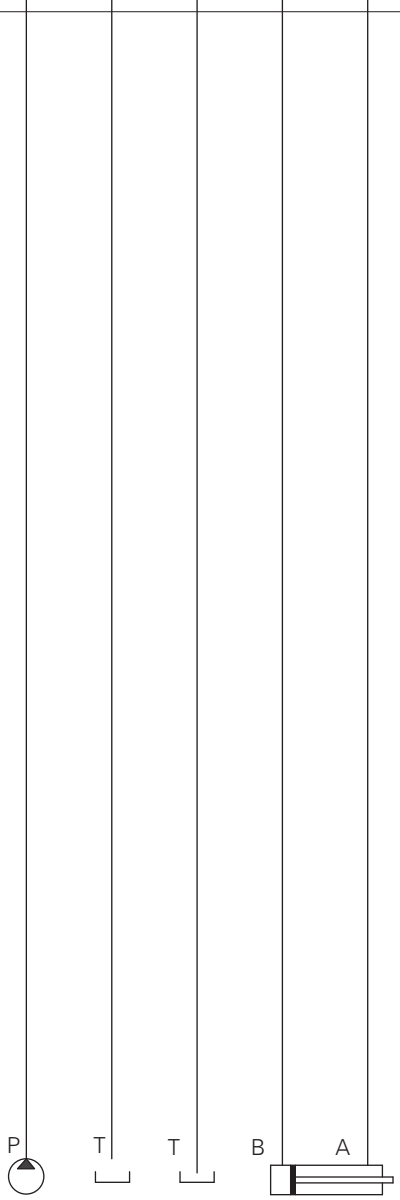

Where measurements are critical request certified drawings. We reserve the right to change specifications without notice.

Blanking and linking plates

⚠ Caution
Sandwich valve flow ratings are limited by the ratings of individual cartridges. Consult cartridge valve literature.

Note: O-Rings to be ordered separately.

Function	Functional symbol	Part number
Blanking Plate	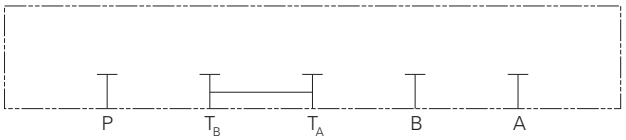	6030861-001 Buna N O-Ring Kit 9900941-000 Viton O-Ring Kit 9900942-000
Linking Plate P to A with B & T Blocked	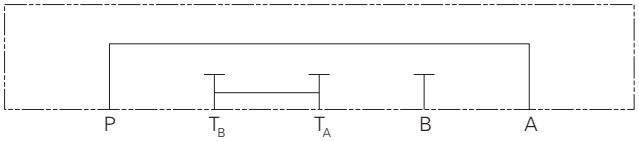	6030883-001 Buna N O-Ring Kit 9900941-000 Viton O-Ring Kit 9900942-000
Linking Plate P to A & B to T	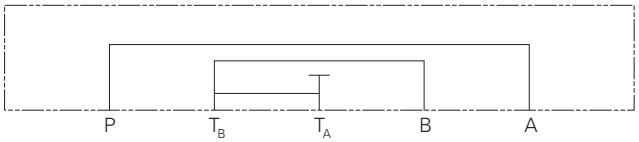	6030885-001 Buna N O-Ring Kit 9900941-000 Viton O-Ring Kit 9900942-000
Linking Plate P to B & A to T	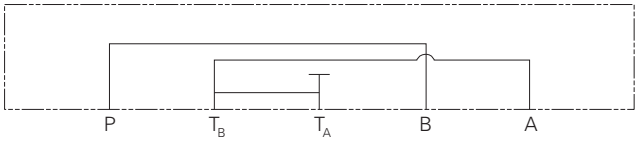	6030887-001 Buna N O-Ring Kit 9900941-000 Viton O-Ring Kit 9900942-000
Linking Plate P to T with A & B Blocked	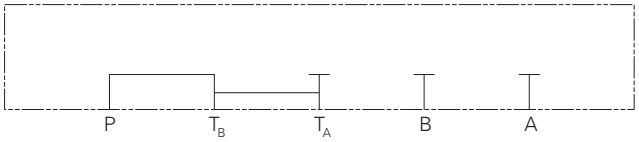	6030889-001 Buna N O-Ring Kit 9900941-000 Viton O-Ring Kit 9900942-000
Linking Plate A to B with P & T Blocked	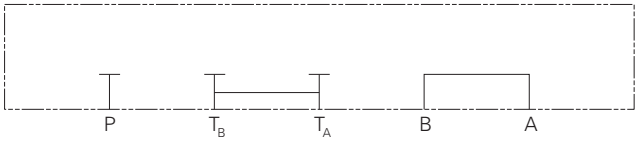	6030891-001 Buna N O-Ring Kit 9900941-000 Viton O-Ring Kit 9900942-000
Linking Plate P to B with A & T Blocked	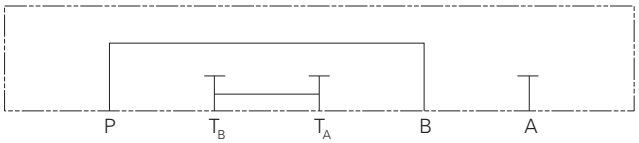	6030893-001 Buna N O-Ring Kit 9900941-000 Viton O-Ring Kit 9900942-000
Linking Plate P to A & B with T Blocked	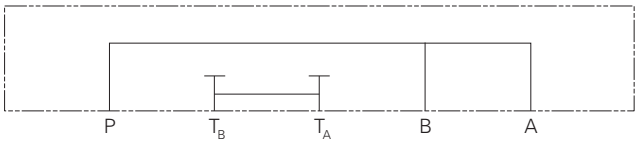	6030895-001 Buna N O-Ring Kit 9900941-000 Viton O-Ring Kit 9900942-000

Viton® is a registered trademark of E.I.DuPont

Model codes

For sandwich valve
assemblies with two valves

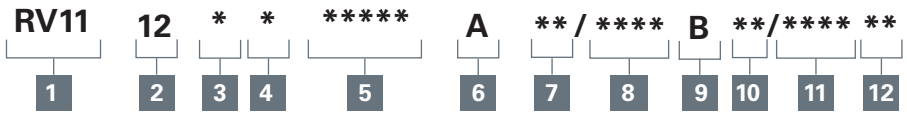

1 Function
RV11 - Relief valve

2 Size
12 - 12 Size

3 Seals
N - Buna-N
V - Viton

4 Adjustment
C - Cap
K - Knob
S - Screw

5 Housing kit
A512W - Dual A & B to T relief
A521W - Cross port relief

6 A port acted upon

7 Cracking pressure range
15 - 10-100 bar (150-1500 psi)
30 - 17-210 bar (250-3000 psi)

8 Pressure setting
User requested setting in psi

9 B port acted upon

10 Cracking pressure range
15 - 10-100 bar (150-1500 psi)
30 - 17-210 bar (250-3000 psi)

11 Pressure setting
User requested setting in psi

12 Special features
00 - None

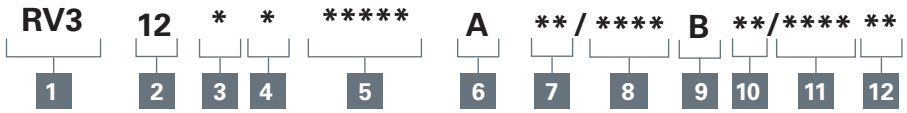

1 Function
RV3 - Relief valve

2 Size
12 - 12 Size

3 Seals
N - Buna-N
V - Viton

4 Adjustment
C - Cap
F - Factory Set
K - Knob
S - Screw

5 Housing Kit
A512W - Dual A & B to T relief
A521W - Cross port relief

6 A port acted upon

7 Cracking pressure range
2.5 - 3.4 to 17 bar (50-250 psi)
8.5 - 13-55 bar (200-850 psi)
22 - 20-150 bar (300-2200 psi)

8 Pressure setting
User requested setting in psi

9 B port acted upon

10 Cracking pressure range
2.5 - 3.4 to 17 bar (50-250 psi)
8.5 - 13-55 bar (200-850 psi)
22 - 20-150 bar (300-2200 psi)

11 Pressure setting
User requested setting in psi

12 Special features
User requested setting in psi

L

Where measurements are critical request certified drawings. We reserve the right to change specifications without notice.

Model codes

For sandwich valve assemblies with two valves

RV1A	10	*	*	A511W	A	**/****	B	**/****	**
1	2	3	4	5	6	7	8	9	10	11	12

1 Function
RV1A - Relief valve

2 Size
10 - 10 Size

3 Seals
N - Buna-N
V - Viton®

4 Adjustment
C - Cap
I -Internal
F - Fixed
K - Knob
S - Screw

5 Housing kit

6 A port acted upon

7 Cracking pressure range
3 - 3.5-20 bar (50-300 psi)
9 - 7-62 bar (100-900 psi)
18 - 17-124 bar (250-1800 psi)
30 - 34-210 bar (500-3000 psi)

8 Pressure setting
User requested setting in psi

9 B port acted upon

10 Cracking pressure range
3 - 3.5-20 bar (50-300 psi)
9 - 7-62 bar (100-900 psi)
18 - 17-124 bar (250-1800 psi)
30 - 34-210 bar (500-3000 psi)

11 Pressure setting
User requested setting in psi

12 Special features
00 - None

1CE90	*	A323W	A	20	S	/	*	B	20	S	/	**	**
1	2	3	4	5	6	7	8	9	10	11	12

1 Pilot ratio/function
1CE30 - Overcenter

2 Adjustment
F - Screw
N - Fixed

3 Housing kit

4 A port acted upon

5 Pressure range
20 - 70-225 bar. Standard setting 100 bar
Setting made at 4.8 L/min.

6 Seals
S - Buna-N
SV - Viton®

7 Pilot ratio
4- 4:1
8- 8:1

8 B port acted upon

9 Pressure range
20 - 70-225 bar. Standard setting 100 bar
Setting made at 4.8 L/min.

10 Seals
S - Buna-N
SV - Viton®

11 Pilot ratio
4- 4:1
8- 8:1

12 Special features
00 - None

L

Where measurements are critical request certified drawings. We reserve the right to change specifications without notice.

Model codes

For sandwich valve assemblies with two valves

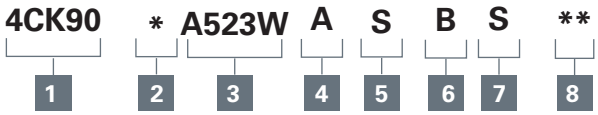

1 Function
4CK90 - Check Valve

2 Pilot port size
1 - Internal

3 Housing kit

4 A port acted upon

5 Adjustment
S - Buna-N
SV - Viton®

6 B port acted upon

7 Seals
S - Buna-N
SV - Viton®

8 Special features
00 - None

L

Where measurements are critical request certified drawings. We reserve the right to change specifications without notice.

Dimensions
mm (inch)

Cavity porting

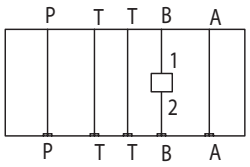

Torque cartridge in housing
108-122 Nm (80-90 ft. lbs)

A507A Housing kit
Part Number 6021185-001

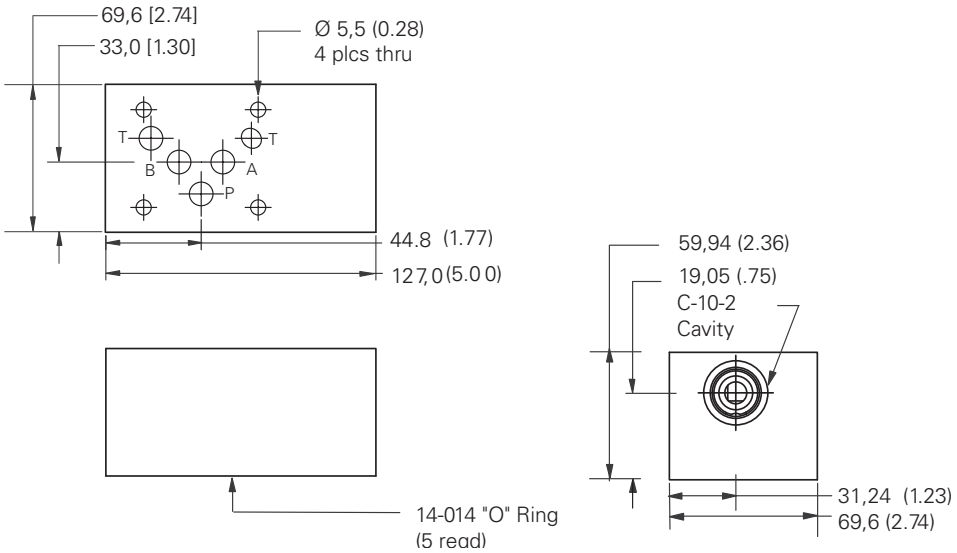

Typical Cartridges	Function
CV3-10	Check valve on A, free flow out

Dimensions
mm (inch)

Cavity porting

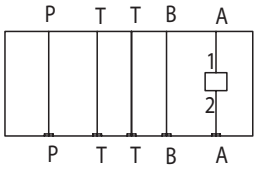

Torque cartridge in housing
81 - 93 Nm (60-70 ft. lbs)

A514A Housing Kit
Part Number 6021288-0 01

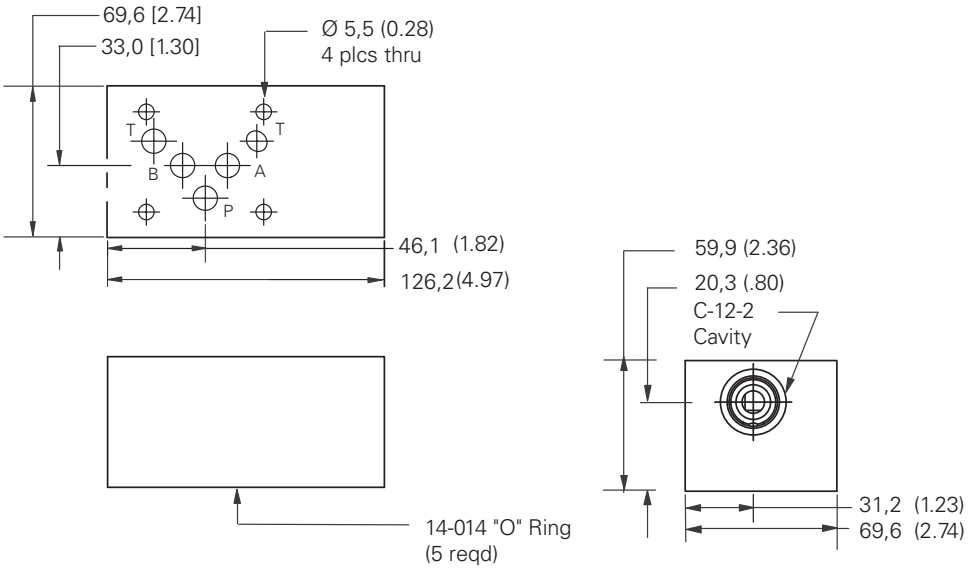

Typical Cartridges	Function
CV11-12	Check valve on A, Free Flow Out
FAR1-12	Flow regulator pressure compensated and check, Meter in A
SBV11-12-C	Solenoid 2-way poppet type bi-directional load holding on A, normally closed
SBV11-12-O	Solenoid 2-way poppet type bi-directional load holding on A, normally open
SV3-12-C	Solenoid 2-way poppet type load holding on A, normally closed
SV3-12-O	Solenoid 2-way poppet type load holding on A, normally open

Where measurements are critical request certified drawings. We reserve the right to change specifications without notice.

Dimensions

ISO 05/D05/NG 10/CETOP5 Housing kits

Dimensions

mm (inch)

Cavity porting

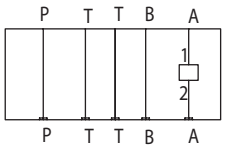

Torque cartridge in housing
81 - 93 Nm (60-70 ft. lbs)

A514B Housing Kit

Part Number **6021273-0 01**

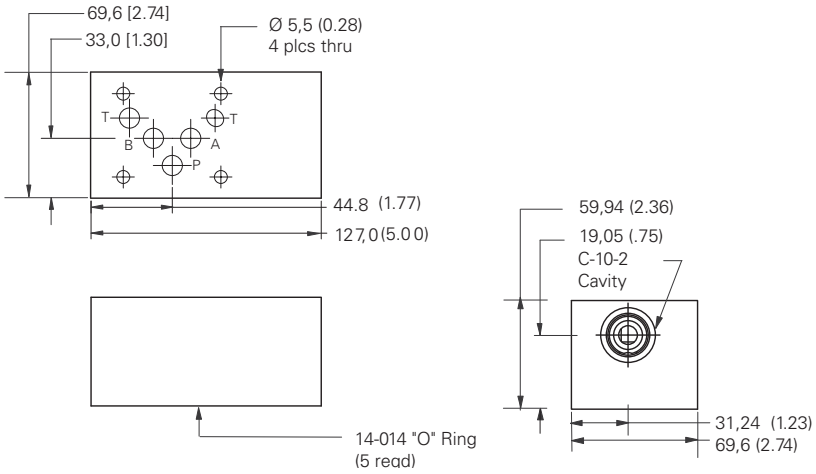

Typical Cartridges	Function
CV11-12	Check valve on B, Free Flow Out
FAR1-12	Flow Regulator pressure compensated and check, Meter in B
SBV11-12-C	SBV11-12-C Solenoid 2-way poppet type bi-directional load holding on B, normally closed
SBV11-12-O	SBV11-12-O Solenoid 2-way poppet type bi-directional load holding on B, normally open
SV3-12-C	Solenoid 2-way poppet type load holding on B, normally closed
SV3-12-O	Solenoid 2-way poppet type load holding on B, normally open

Dimensions

mm (inch)

Cavity porting

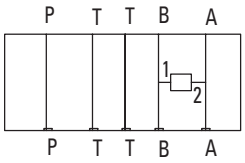

Torque cartridge in housing
81 - 93 Nm (60-70 ft. lbs)

A518W Housing kit

Part Number **6021277-001**

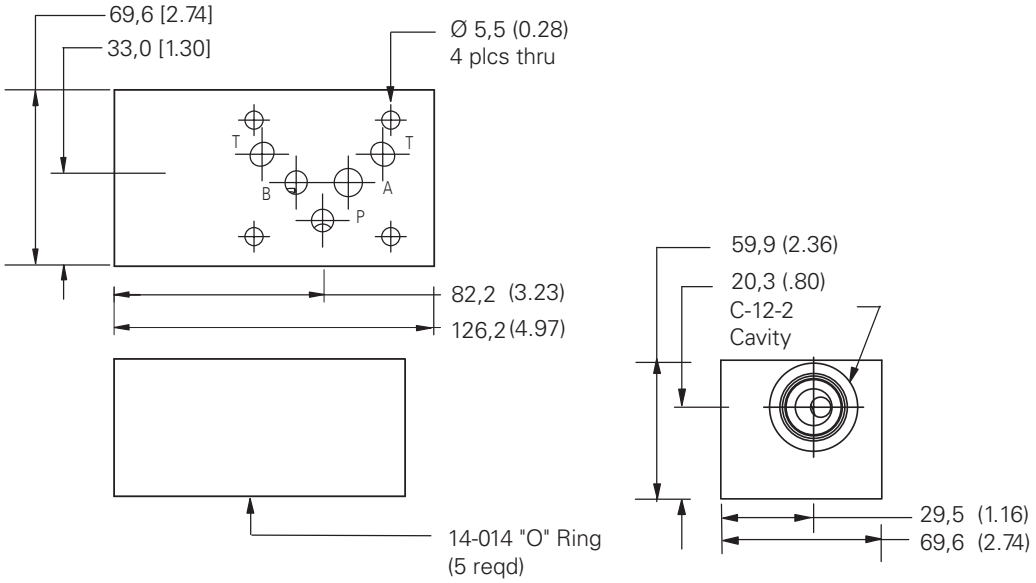

Typical cartridges	Function
SBV11-12-C	Solenoid 2-way poppet type bi-directional load holding on A-B & B-A, normally closed
SBV11-12-O	Solenoid 2-way poppet type bi-directional load holding on A-B & B-A, normally closed

L

Dimensions

mm (inch)

Cavity porting

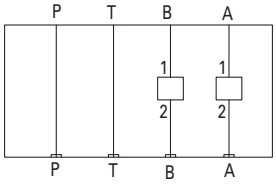

Torque cartridge in housing-
81-93 Nm (60-70 ft bls)

A514W Housing kit

Part Number **4998388-001**

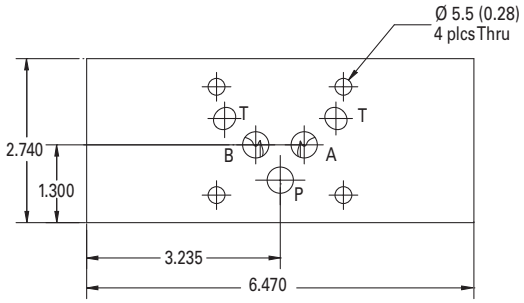

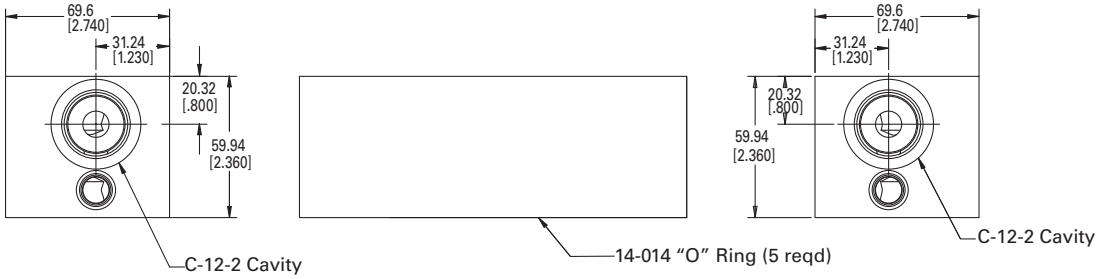

Typical cartridges	Function
FAR1-12	Flow regulator pressure compensated and check, Meter in A
SBV11-12-C	Solenoid 2-way poppet type bi-directional load holding on A, normally closed
SBV11-12-0	Solenoid 2-way poppet type bi-directional load holding on A, normally open
SV3-12-C	Solenoid 2-way poppet type load holding on A, normally closed
SV3-12-0	Solenoid 2-way poppet type load holding on A, normally open

Where measurements are critical request certified drawings. We reserve the right to change specifications without notice.

Dimensions

ISO 05/D05/NG 10/CETOP5 Housing kits

Dimensions

mm (inch)

Cavity porting

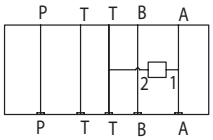

Torque cartridge in housing
81 - 93 Nm (60-70 ft. lbs)

A521A Housing kit

Part Number **6021299-0 01**

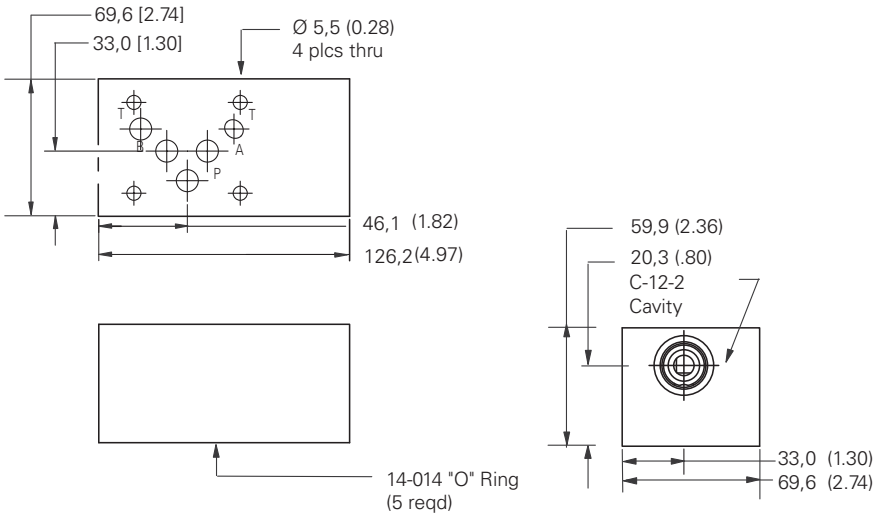

Typical cartridges	Function
RV1-12	Relief valve A-T
RV11-12	Relief valve A-T

Dimensions

mm (inch)

Cavity porting

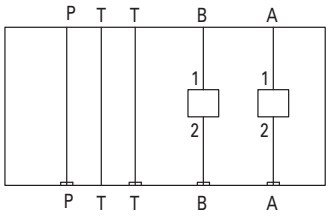

Torque cartridge in housing-

A524W Housing Kit

Part Number **4998389-001**

Typical cartridges	Function
FAR1-12	Flow regulator pressure compensated and check, Meter in B
SV3-12-C	Solenoid 2-way poppet type load holding on B, normally closed
SV3-12-O	Solenoid 2-way poppet type load holding on B, normally open

Where measurements are critical request certified drawings. We reserve the right to change specifications without notice.

Dimensions
mm (inch)

Cavity porting

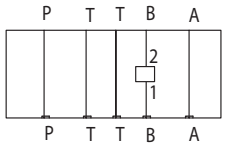

Torque cartridge in housing
81 - 93 Nm (60-70 ft. lbs)

A524B Housing kit
Part Number 6021282-0 01

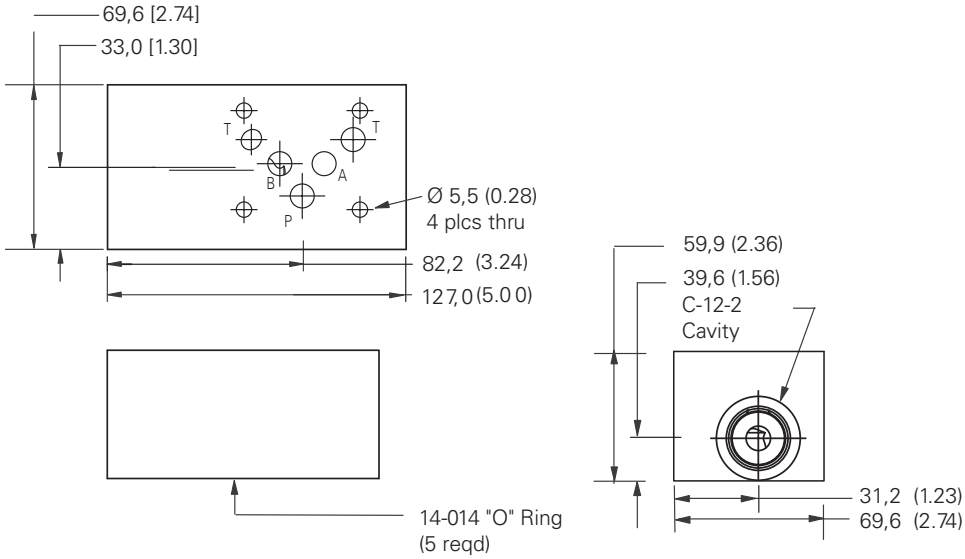

Typical cartridges	Function
FAR1-12	Flow regulator pressure compensated and check, Meter in B
SV3-12-C	Solenoid 2-way poppet type load holding on B, normally closed
SV3-12-O	Solenoid 2-way poppet type load holding on B, normally open

Dimensions
mm (inch)

Cavity porting

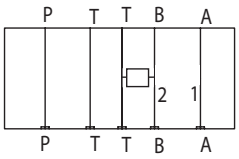

Torque cartridge in housing
81 - 93 Nm (60-70 ft. lbs)

A521B Housing kit
Part Number 6021295-0 01

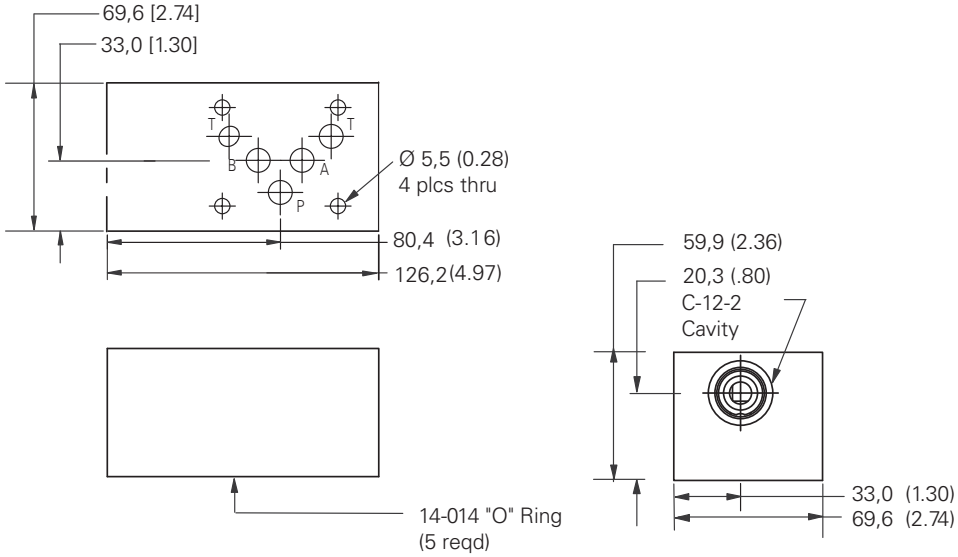

Typical cartridges	Function
RV1-12	Relief valve B-T
RV11-12	Relief valve B-T

Where measurements are critical request certified drawings. We reserve the right to change specifications without notice.

Dimensions

ISO 05/D05/NG 10/CETOP5 Housing kits

Dimensions

mm (inch)

A521P Housing kit

Part Number 6021302-0 01

Cavity porting

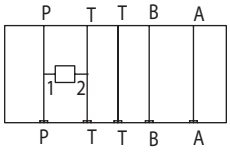

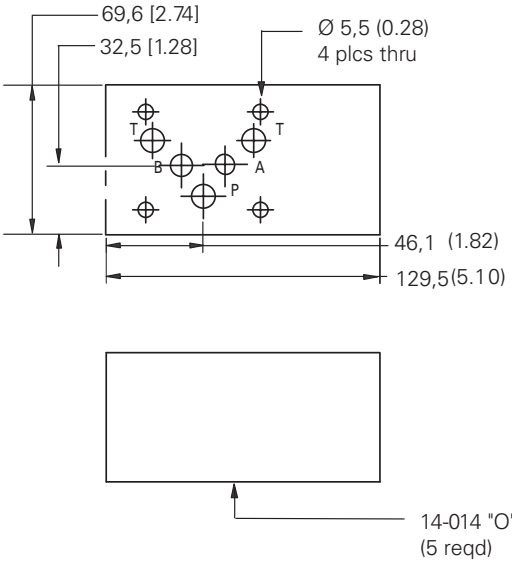

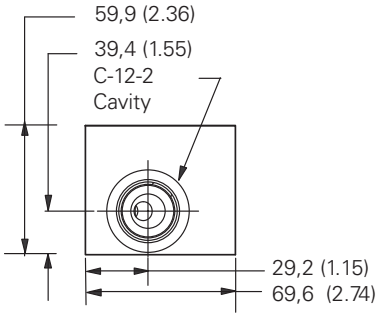

Torque cartridge in housing
81 - 93 Nm (60-70 ft. lbs)

Typical cartridges	Function
RV1-12	Relief valve P-T
RV11-12	Relief valve P-T

Dimensions

mm (inch)

A524P Housing kit

Part Number 6021186-001

Cavity porting

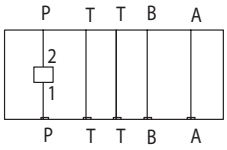

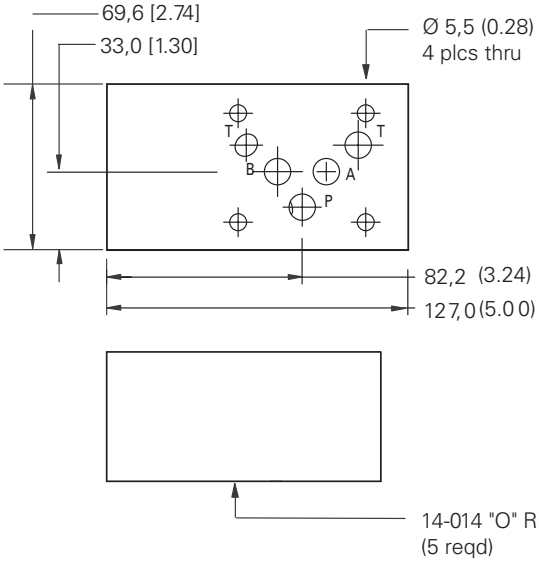

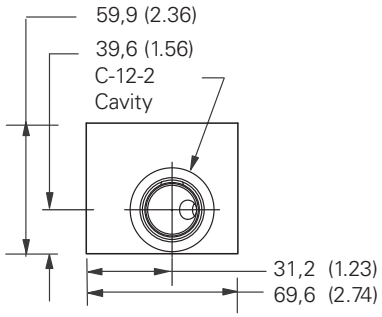

Torque cartridge in housing
81 - 93 Nm (60-70 ft. lbs)

Typical cartridges	Function
CV11-12	Check vavle on P
FAR1-12	Flow regulator pressure compensated, meter in P

L

Where measurements are critical request certified drawings. We reserve the right to change specifications without notice.

Dimensions
mm (inch)

A525P Housing kit
Part Number 6021293-0 01

Cavity porting

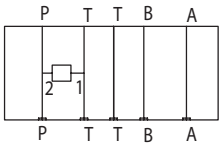

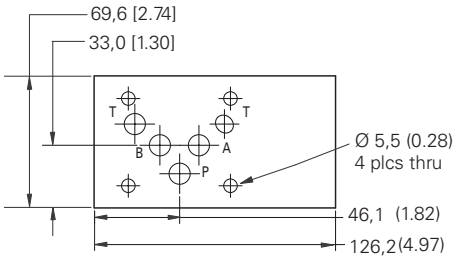

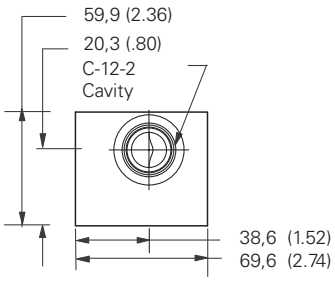

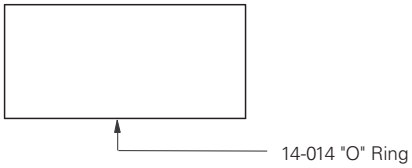

Torque cartridge in housing
81 - 93 Nm (60-70 ft. lbs

Typical cartridges	Function
SV3-12-C	Solenoid 2-way poppet type P-T, normally closed
SV3-12-O	Solenoid 2-way poppet type P-T, normally open

Dimensions
mm (inch)

A511W Housing kit
Part Number 4998388-001

Cavity porting

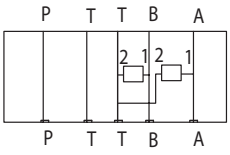

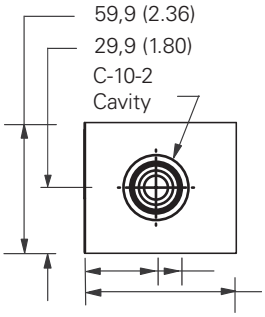

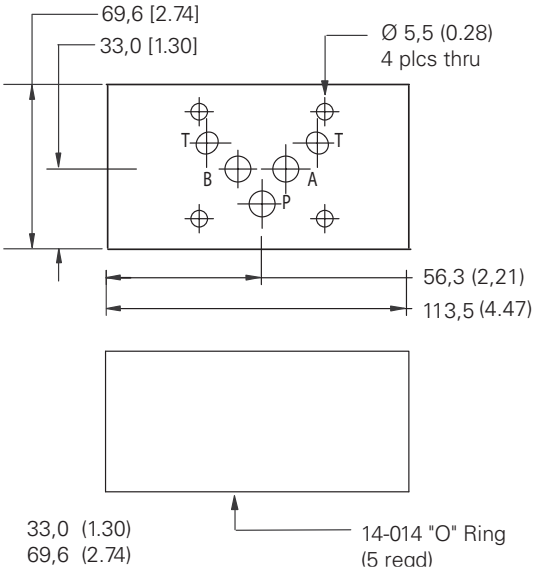

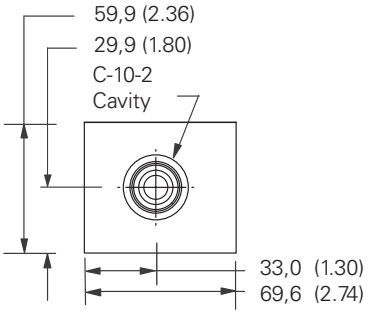

Torque cartridge in housing
81 - 93 Nm (60-70 ft. lbs)

Typical cartridges	Function
RV1-10	Dual relief valve A-T, B-T

Where measurements are critical request certified drawings. We reserve the right to change specifications without notice.

Dimensions

ISO 05/D05/NG 10/CETOP5 Housing kits

Dimensions
mm (inch)

A512W Housing kit
Part Number 6021184-001

Cavity porting

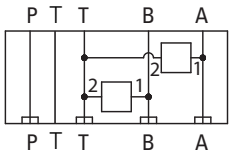

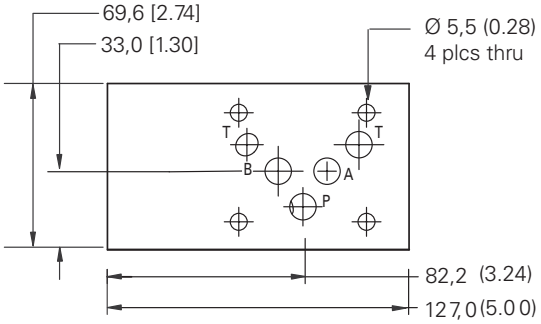

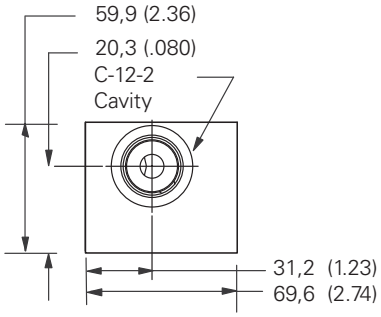

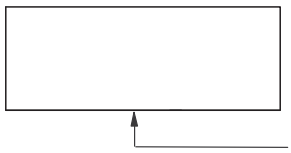

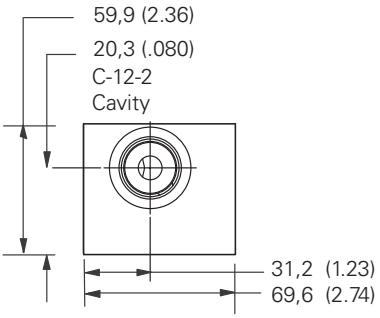

Torque cartridge in housing
81 - 93 Nm (60-70 ft. lbs

Typical cartridges	Function
RV1-12	Dual relief valve A-T, B-T
RV11-12	Dual relief valve A-T, B-T

Dimensions
mm (inch)

A526P Housing kit
Part Number 6021158-0 01

Cavity porting

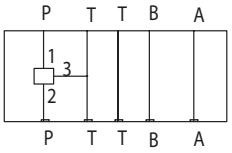

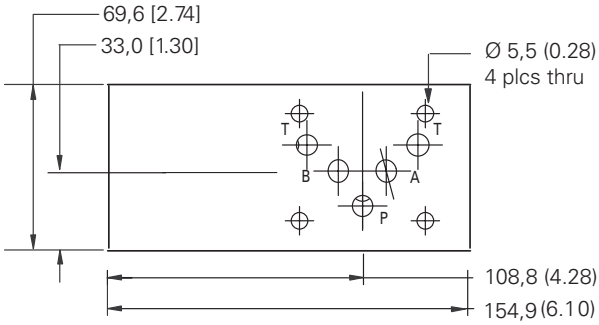

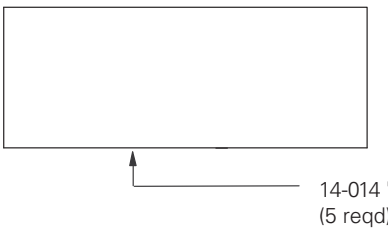

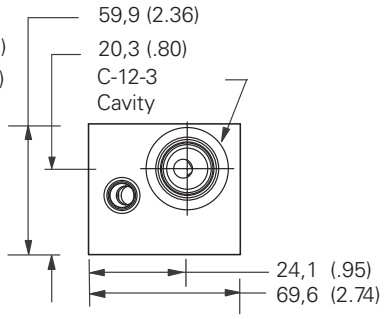

Torque cartridge in housing
81 - 93 Nm (60-70 ft. lbs)

Typical cartridges	Function
PRV12-12	Reducing valve (P) drained to T
SV11A-12-3	Solenoid 3-way selector P

L

Where measurements are critical request certified drawings. We reserve the right to change specifications without notice.

Dimensions
mm (inch)

Cavity porting

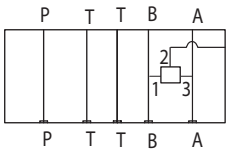

Torque cartridge in housing
8.1 -13.6 Nm (6-10 ft. lbs)

A509W Housing kit
Part Number 6021189-001

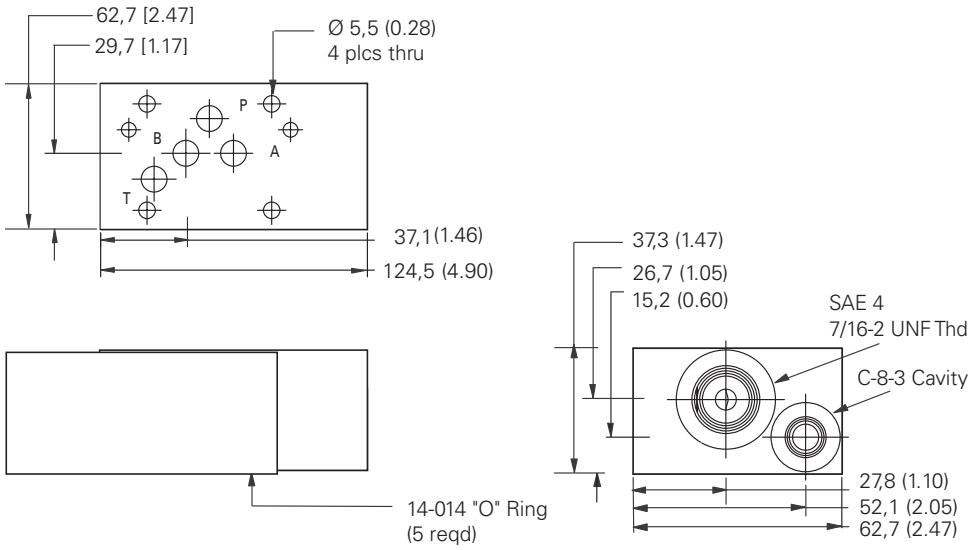

Typical cartridges	Function
DSV2-8-B-0	Shuttle valve A & B Output external

Dimensions
mm (inch)

Cavity porting

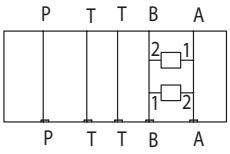

Torque cartridge in housing
81 - 93 Nm (60-70 ft. lbs)

A521W Housing kit
Part Number 6021158-0 01

Typical cartridges	Function
RV3-12	Cross port relief valve A& B
RV11-12	Cross port relief valve A& B

Where measurements are critical request certified drawings. We reserve the right to change specifications without notice.

Dimensions

ISO 05/D05/NG Housing kits

Dimensions
mm (inch)

A510B Housing kit
Part Number 6021352-0 01

Cavity porting

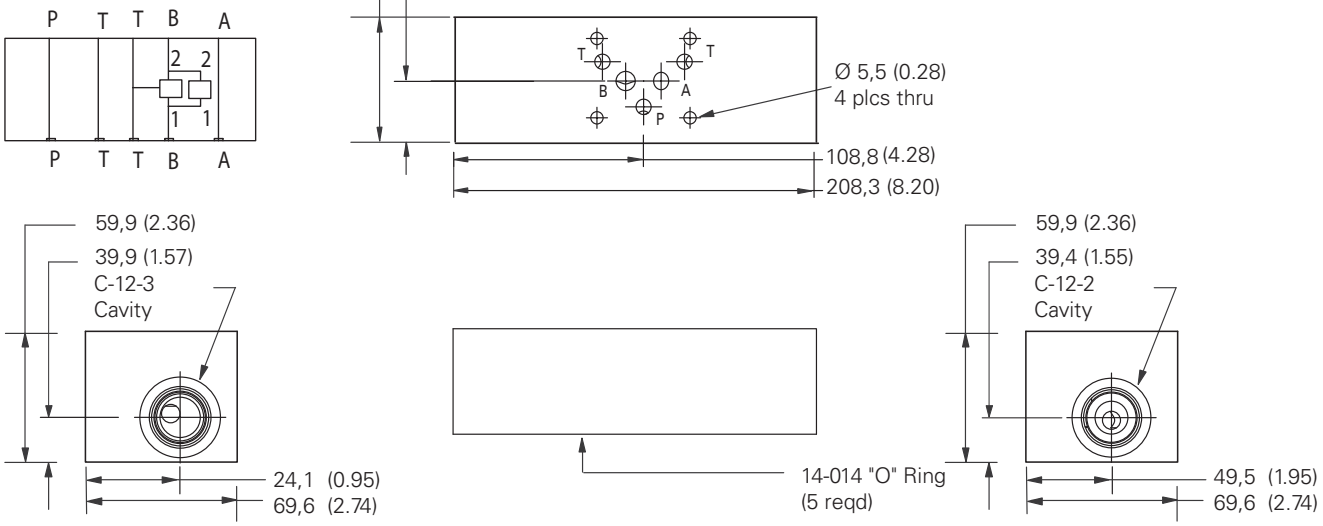

Torque cartridge in housing
81 - 93 Nm (60-70 ft. lbs)

Typical cartridges	Function
PRV12-12/CV11-12	Reducing valve (B) drained to T, reverse free-flow check

Dimensions
mm (inch)

A523W Housing kit
Part Number 5999906-0 01

Cavity porting

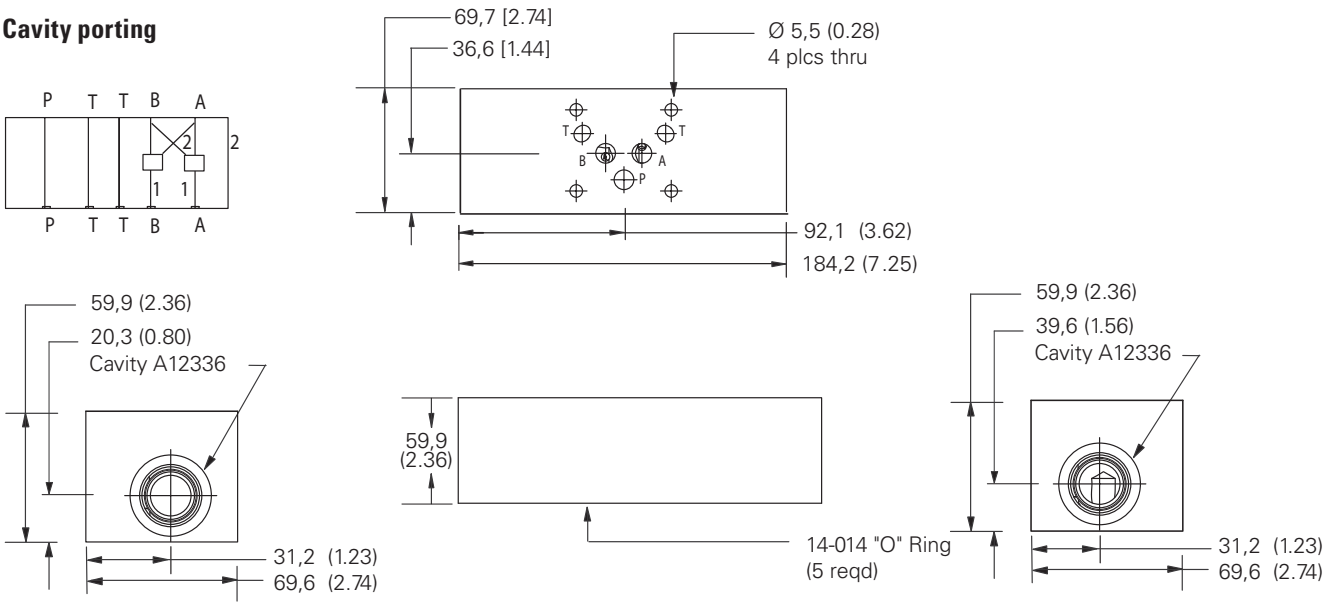

Torque cartridge in housing
81 - 93 Nm (60-70 ft. lbs)

Typical cartridges	Function
4CK90	Check in A and B Cross Piloted
1CE90	Overcenter in A and B Cross Piloted

Where measurements are critical request certified drawings. We reserve the right to change specifications without notice.

Dimensions
mm (inch)

A523A Housing kit
Part Number 6021282-0 01

Cavity porting

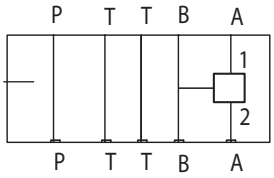

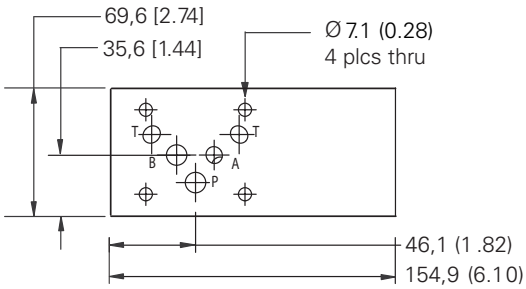

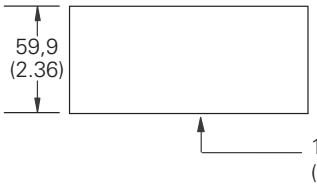

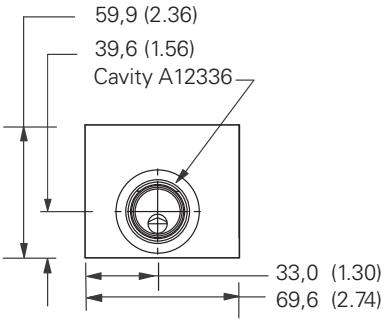

Torque cartridge in housing
81 - 93 Nm (60-70 ft. lbs)

Typical cartridges	Function
4CK90	Check in A and Piloted from B
1CE90	Overcenter A and Piloted from B

Dimensions
mm (inch)

A514W Housing kit
Part Number 4998388-001

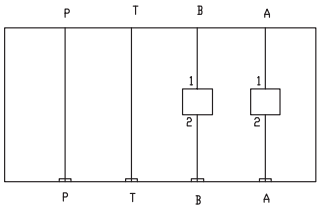

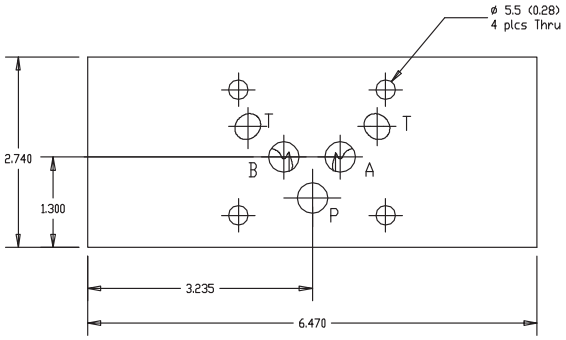

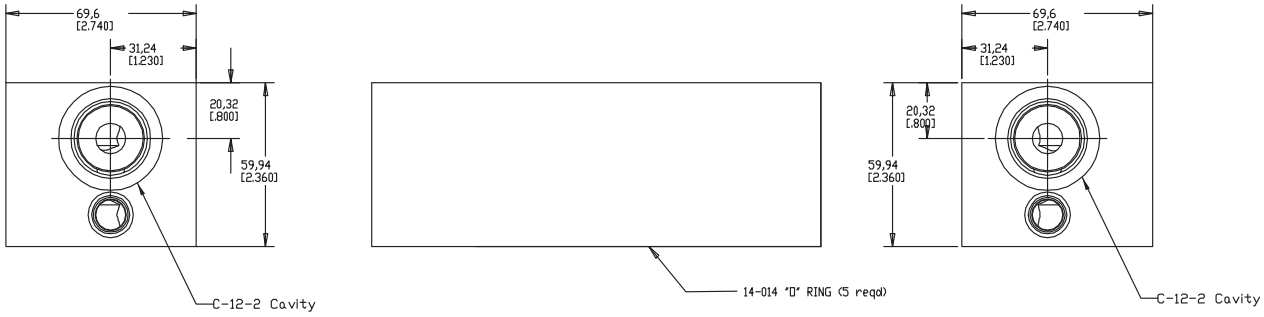

Torque cartridge in housing
81 - 93 Nm (60-70 ft. lbs)

Typical cartridges	Function
4CK30	PO Check Valve on A and Pilot from B
1CE30	Counterbalance Valve on A and Pilot from B

L

Dimensions

ISO 05/D05/NG 10/CETOP5 Housing kits

Dimensions

mm (inch)

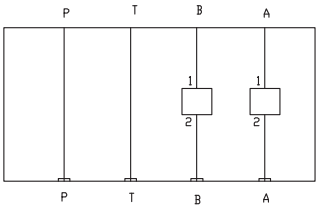

A524W Housing kit

Part Number 4998389-001

Torque cartridge in housing
81 - 93 Nm (60-70 ft. lbs)

Typical cartridges	Function
4CK90	PO Check Valve on A and Pilot from B
1CE90	Counterbalance Valve on A and Pilot from B

L

Technical reference

HIC manifold design guidelines, tooling, torque specifications, port and cavity dimensions



Powering Business Worldwide

Technical reference

GENERAL GUIDELINES FOR HYDRAULIC INTEGRATED CIRCUITS (HIC) M-4
PREFERRED TOOLING FOR MACHINING OF CUSTOM MANIFOLDS M-7
PREFERRED TOOLING FOR MACHINING CUSTOM MANIFOLDS M-8
TORQUE SPECIFICATIONS M-9
PORT INFORMATION M-10
CAVITY TOOLS M-12
C–**–2(P) M-14
C-**-2 CAVITY DIMENSIONS M-15
C-**-3 CAVITY DIMENSIONS M-16
C-**-3S CAVITY DIMENSIONS M-17
C-**-4 CAVITY DIMENSIONS M-18
C-**-4U CAVITY DIMENSIONS M-19
C-**-5S CAVITYDIMENSIONS M-20
CARTRIDGE CAVITIES M-21
TC CAVITY M-34

General guidelines for hydraulic integrated circuits (HIC)

Reviewing circuit

All designs begin with a schematic circuit design inspired by the application. Before the planning stage, review the design utilizing the following steps:

- Match schematic symbols to model codes.
- Note size and cavity of each valve and write it on schematic.
- Note port numbers of the valves and write them on schematic.
- Note manifold port types and sizes specified by customer.
- Note pressure, flow and material of manifold block (steel or aluminum).

Circuit questions should be answered by the customer before beginning a design. It is also recommended that schematic hydraulic regions or networks be color coded using color pens. Regions or networks may be broken down in individual colors (pressure, tank, pilot, etc.) but it may be easier to design if regions are broken down into sub-regions such as pressure from port one of a solenoid valve to port two of a relief valve. Colored layers may be assigned later to match schematic circuit coloring.

Initial design

Once the circuit is fully understood, it is advisable to lay the design out by hand first. Things to consider while planning the design are:

- Block size is often specified by customer.
- Specify an overall envelope size, in addition to the specified block size. Overall envelope size includes block size and any valves or fittings protruding from the manifold block.
- Restrictions specified for a mounting surface of the manifold block. Valves and ports may be restricted from a particular surface.
- Specify mounting holes, threaded holes and thru holes (if necessary).
- Arrange valves in a logical manner. Valves and ports in the same regions should be located in close proximity to each other.
- Eliminate as many turns in the regions as possible to reduce the number of cross drill holes or construction lines. This helps keep pressure drops (DP) and manufacturing costs down.

Material sizes

To obtain an optimal cost manifold it is desirable to select a standard material size for the manifold, compare the block size with the standard material size table. See Standard Material Sizes (page M-5). If a standard size is not available, a cut plate may be used.

Hydraulic schematic

If a schematic is desired on the assembly, it may be created from existing symbols. As an alternative, the entire circuit may be created outside of an assembly and imported as a symbol (block). All of the Vickers screw-in cartridge valves have schematic symbols which can be found in the SICV Cartridge Valve Library of Symbols CD, used in conjunction with AutoCad software. Schematic symbols not found in the library may be created on an "as needed" basis.

Accurate design

All dimensions on CAD design must be accurate and to scale in order to be utilized by CAM software in conjunction with CNC machine tools. Manually or interactively modified dimension cannot be tolerated.

Note: Failure to ensure that CAD dimensions are accurate and to scale may result in improper machinery by CNC Machine Tools.

Datum point

The datum point or origin point (0,0,0) on machining drawings is the upper left corner when facing the front view.

Assembly dimensioning

Dimension all ports, mounting holes and overall envelope size.

External clearances

Allow enough room for clearance around solenoid coils, handknobs, levers and wrench clearance for fittings. If 90° elbow fittings are to be used, some may be required to swing a full 360 arc.

Assembly notes

Notes are added for standard or special assembly, handling, or shipping instructions, as well as special stampings.

Port table

Include a port table with names and sizes of all ports.

Standard tooling

In order to obtain fast turnaround on designs, limit the tooling used to that listed in the standard tooling table. See Preferred Tooling for Machining Manifolds (page M-6).

⚠ Warning

This information is designed to assist the engineering professional in the design of manifold blocks and related hydraulic systems. It is the designer's responsibility to verify the adequacy of the design through approporate verifications, review and testing of the final design.

M

Where measurements are critical request certified drawings. We reserve the right to change specifications without notice.

Datum Point Example in orthographic third angle projection:

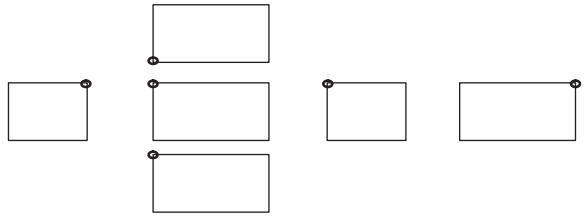

Squaring up the block

Always "square up" the raw block before machining the cavities, ports and holes. This is to eliminate any potential "drill walk" which leads to scrapped manifolds. When squaring up a block, remove approximately 0.015" of material from each face for Aluminum blocks and 0.030" of material from each face for steel blocks. This is done to ensure that all six faces are parallel or perpendicular. Finished machining should reflect the squared up dimensions. See Standard Material Sizes (Table 1).

Example: 4.0" x 5.0" x 6.0" (101.6 mm x 127 mm x 152.4 mm) block will be dimensioned to 3.97" x 4.97"x 5.97" (100.8 mm x 126.2 mm x 151.6 mm).

Creation of machining table

Create a machining operation table or bore chart. Machining depths are given from the surface of the block. List all drill depths, mills, taps and form tools in the machining table. Call out drill depths at the shoulder depth of the drill, not to the drill point depth.

Machining depths

All machining depths are to the corner of the full diameter as opposed to the drill point. All depths are measured from the face plane (surface) of a manifold block.

Avoid any drill depths greater than 25 diameters.

Additional line lengths may result in increasing pressure drops.

Machining notes

Machining notes are to be added for standard or special machining, handling and shipping instructions.

Drillings

Drillings that go completely through a cavity port area should be on the center axis of the cavity wherever possible; see Figure (a). Otherwise it should intersect the cavity tangent to the outside diameter of the bore it connects with; see Figure (b).

Note: Breaking into a cavity at some point in between these recommended areas will lead to drill walk and can result in a high scrap rate, as well as premature drill breakage.

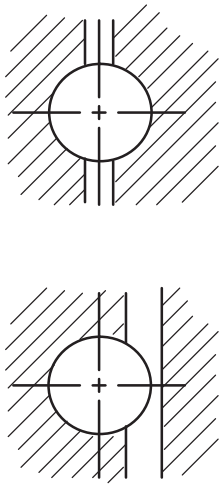

Spotface depths

All SAE ports and cavities have spotface depths of .031" (.8 mm) unless otherwise specified. BSPP ports have spotface depths of .060" (1.5 mm) unless otherwise specified.

Counterbores

In counterbore cases, the actual cavity spotface is located at the depth of the counterbore. When counterbore depths are greater than 0.125", the following diameters should be used:

Valve Series	Counterbore	
	Inch	Metric (mm)
8	1.38"	35,0
10	1.38"	35,0
12	1.75"	44,5
16	2.00"	50,8
20	2.56"	65,0

Use of expander plugs and zero leak gold sae o-ring plugs

On small HIC packages, expander plugs can be used to block off construction drilling at the surface of a face. Larger than a 12mm expander plug are not recommended in aluminum. Any construction drillings larger than 0.4" (10 mm) are plugged with zero leak gold SAE O-Ring plugs (internal hex type). The machining callout for these plugs can be either the industry standard SAE straight thread O-ring boss port configuration or the straight thread O-ring boss short port configuration. Refer to Port Dimensions (page M-9 and M-10).

Surface treatments

Any manifold face that calls for a surface mounted (gasket mounted) valve such as a DG4V type directional control valve, or a pump or motor interface, should have a minimum roughness callout of 63 microinches (.0016mm) and a flatness callout of .002" (.05mm). See examples below.

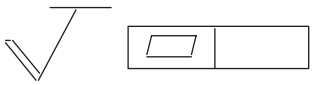

To prevent corrosion, steel manifolds are oil dipped or coated with rust protective fluid, unless otherwise specified. To prevent oxidation, aluminum manifold blocks are gold anodize, unless otherwise specified. Aluminum manifolds where the internally grounded coil is used should not be anodized. Prototypes are supplied without surface treatment.

M

General guidelines for hydraulic integrated circuits (HIC)

Wall thickness

For pressures up to 3000 psi (210 bar), aluminum may be used, for pressures above 3000 PSI (210 bar). Dura-Bar cast iron manifold material is recommended.

Larger cavities or bores require a greater wall thickness. The table below shows recommended minimum wall thicknesses for Aluminum and Dura-Bar.

⚠ Warning

Failure to follow the recommended wall thicknesses may lead to manifold failure.

⚠ Life cycle of manifold blocks

Be aware that designing to these general guidelines will not guarantee the manifold will survive any finite number of cycles. The only way to properly assure a specified life is to run a thorough testing of both burst and endurance in the actual application circuit.

Creating bill of material – BOM

Develop a BOM that includes quantity, model codes, part numbers and descriptions of the HIC. Model codes of some valves require pressure settings. A machining operation table or bore chart should be created. All plugs, orifice plugs, disks, check valves, pistons, and any other part should be included in the BOM.

Drill size/cavity bore diameter		Wall thickness	
Inch Ø	**Metric (mm) Ø**	**Inch**	**Metric (mm)**
.250″	6,35	.125	3,18
.250″ up to .500″	6,35 up to 12,7	.250	6,35
.500″ up to .750″	12,7 up to 19,05	.375	9,53
.750″ up to 1.000″	19,05 up to 25,4	.500	12,70
1.000″ up to 1.312″	25,4 up to 33,34	.600	15,24

Table 1
Standard material sizes

Standard 6061-T6 aluminum bar stock sizes

Size	Size	Size
2 x 2	2.5 x 4.5	4 x 4
2 x 3	3 x 3	4 x 4.5
2 x 4	3 x 3.5	4 x 5
2 x 5	3 x 4	4 x 6
2 x 6	3 x 4.5	4.5 x 4.5
2.5 x 2.5	3 x 5	5 x 5
2.5 x 3	3.5 x 3.5	5 x 6
2.5 x 3.5	3.5 x 4	5.5 x 5.5
2.5 x 4	3.5 x 4.5	6 x 6

Where measurements are critical request certified drawings. We reserve the right to change specifications without notice.

Preferred tooling for machining of custom manifolds

Preferred tooling for machining manifolds

Spot drill	Jobber length drill	Screw machine length drill	
Size	**Size**	**Size**	**Size**
1" x 90	#38 (.1015)	5/32"	1/2"
Dexport C-16 spot face	#29 (.136)	11/64"	37/64"
Dexport C-16 short spot face	D (.246)	3/16"	43/64"
1/4" spot drill	R (.339)	#1 (.228)	45/64"
	R (.339)	F (.257)	51/64"
	U (.368)	3/8"	13/32"
	59/64"	27/64"	1-7/32
		7/16"	

Drill size inches	Size inches	Size inches	Rougher	
1/8" (3-1/2" flute length)	11/32" (6" flute length)	11/16" (6" flute length)	C-4-2	C-12-3
1/8" (6" flute length)	3/8" (6" flute length)	3/4" (6" flute length)	C-4-3	C-12-3S
3/16" (6" flute length)	3/8" (8" flute length)	51/64" (6" flute length)	C-7-3	C-12-4
#7 (.201) (6" flute length)	13/32" (6" flute length)	13/16" (6" flute length)	C-8-2	C-16-2
7/32" (6" flute length)	7/16" (6" flute length)	7/8" (6" flute length)	C-8-3	C-16-3
1/4" (3-1 / 2" flute length)	7/16" (8" flute length)	15/16" (6" flute length)	C-8-4	C-16-3S
1/4" (6" flute length)	31/64" (6" flute length)	31/32" (6" flute length)	C1-8-2	C-16-4
1/4" (8" flute length)	1/2" (6" flute length)	1" (6" flute length)	C-10-2	C-20-2
9/32" (3-1 / 2" flute length)	1/2" (8" flute length)	1-3/32" (6" flute length)	C-10-3	C-20-3
9/32" (6" flute length)	17/32" (6" flute length)	1-1/8" (6" flute length)	C-10-3S	C-20-3S
5/16" (3-1 / 2" flute length)	9/16" (6" flute length)	1-1/4" (8" flute length)	C-10-4	C-20-4
5/16" (6" flute length)	39/64" (6" flute length)	1-3/8" (6" flute length)	C-12-2	
5/16" (8" flute length)	5/8" (6" flute length)	1-13/32" (6" flute length)		
11/32" (3-1 / 2" flute length)	43/64" (6" flute length)	1-1/2" (6" flute length)		

Finish tool		Flat bottom drill size	Reamer size	Reamer size	Slot cutter	Ball end mill	End mill
C-4-2	C-12-3S	7/16"	.1285"	5mm	#3 T	9/32"	1/2"
C-4-3	C-12-4	13/32"	.485"	7mm	#5 T	11/32"	3/8"
C-8-2	C-16-2	1/2"	.562" (flat bottom)	8mm	C-12-2UT		7/16"
C-8-3	C-16-2 (undersized)	17/32"	.6255" (flat bottom)	9mm	#6 T		13/32"
C-8-4	C-16-3	43/64"	1.1255" (flat bottom)	10mm			13/16"
C2-8-2	C-16-3S	39/64"	1.437" (flat bottom)	12mm			7/8"
C-10-2	C-16-4	1-3/32"		14mm			15/16"
C-10-2 (undersized)	C-20-2	1-13/32"		16mm			1"
C-10-3	C-20-2 (undersized)						1-13/16"
C10-3S	C-20-3						1-3/8"
C-10-4	C-20-3S						1-1/2"
C-12-2	C-20-4						2"
C-12-3							2.562"

M

Where measurements are critical request certified drawings. We reserve the right to change specifications without notice.

Preferred tooling for machining custom manifolds

Preferred tooling for machining manifolds continued

Port tool					
SAE #2	Dexport #8	Dexport #24	SP-05	SP-16	BSPP-75-8225
SAE #3	Dexport #10	Waukesha #20	SP-06	BSPP-13-8221	BSPP-125-8227
SAE #4	Dexport #12	SP-02	SP-08	BSPP-25-8222	
SAE #5	Dexport #14	SP-03	SP-10	BSPP-38-8223	
SAE #6	Dexport #16	SP-04	SP-12	BSPP-50-8224	

Sense check took	Counter sink	Drill	Center drill	Press tap
SC-4-2-75	2" x 90	1/4" x 90	#5	#6-32 X
SC-4-2-88	2" x 5"			#10-24 X
	1/4" x 90			1/4"-20 X

Tap				Pulley tap
1/4"-20	5/8"-11	1/8"-28 BSPP	1/2"-14 NPTF	1/4" - 20
5/16"-18	5/8"-18	1/4"-19 BSPP	3/4"-14 NPTF	5/16" - 24
5/16"-24	3/4"-16	3/8"-19 BSPP	1"-11 1/2 NPTF	7/16" - 20
3/8"-16	7/8"-14	1/2"-14 BSPP	M10 x 1.5 Metric	9/16" - 18
3/8"-24	1"-14	3/4"-14 BSPP	M10 x 1.25 Metric	3/4" - 16
7/16"-14	1-1/16"-12	1"-11 BSPP		
7/16"-20	1-3/16"-12	1/16"-27 NPTF		
1/2"-13	1-5/16"-12	1/8"-27 NPTF		
1/2"-20	1-5/8"-12	1/4"-18 NPTF		
9/16"-18	1-7/8"-12	3/8"-14 NPTF		

Where measurements are critical request certified drawings. We reserve the right to change specifications without notice.

Installation torque: cartridge into cavity

Cartridge Size	For application pressure <210 bar (3000 psi) Aluminum cavity Nm (ft. Lbs)	For application pressure 210 bar (3000 psi) to 350 bar Steel cavity Nm (ft. Lbs)
4 Series	8.2 - 13.6 (6 - 10)	8.2 - 13.6 (6 - 10)
8 Series	34.0 - 40.8 (25 - 30)	34.0 - 40.8 (25 - 30)
10 Series	47.6 - 54.4 (35 - 40)	68.0 - 75.0 (50 - 55)
12 Series	81.6 - 95.2 (60 - 70)	102.0 - 115.0 (75 - 85)
16 Series	108.8 - 122.4 (80 - 90)	136.0 - 149.6 (100 - 110)
20 Series	128 - 155 (95 - 115)	163.0 - 183.0 (120 - 135)

Installation torque: plugs and fittings into aluminum or steel manifolds

Nominal size		Installation torque Nm (ft. Lbs)
SAE 2		4.6 - 5.6 (3.4 - 4.1)
SAE 3		6.8 - 9.5 (5 - 7)
SAE 4	1/4" BSPP	8.2 - 13.6 (6 - 10)
SAE 5		13.6 - 20.4 (10 - 15)
SAE 6	3/8" BSPP	20.4 - 27.2 (15 - 20)
SAE 8	1/2" BSPP	34.0 - 40.8 (25 - 30)
SAE 10	5/8" BSPP	47.6 - 54.4 (35 - 40)
SAE 12	3/4" BSPP	81.6 - 95.2 (60 - 70)
SAE 14		108.8 - 122.4 (80 - 90)
SAE 16	1" BSPP	136.0 - 149.6 (100 - 110)
SAE 20	1.1/4" BSPP	149.6 - 163.2 (110 - 120)

Installation torque: miscellaneous

	Installation torque Nm (ft. Lbs)
1/2-20 Retaining nut, short or long, used on standard solenoid valves	5.4 - 8.2 (4 - 6)
1/2-20 Large retaining nut used on explosion proof solenoid coils	9.5 - 13.6 (7 - 10)
1/2-20 Cap not used on RV, FC, ETC.	9.5 - 13.6 (7 - 10)
10-24 Set screw used on Knobs	4.1 - 5.4 (3 - 4)
7/8-24 Nut used on SV1-16-3-*-** solenoid valves	13.6 - 20.4 (10 - 15)

Where measurements are critical request certified drawings. We reserve the right to change specifications without notice.

Port information

SAE and BSPP Ports

Port dimensions

Key dimensions in standard housings – mm (inch)

SAE sizes

SAE size	Thread size	Minimum spotface ø	Minimum full thread depth
4	0.437"-20 UNF-2B	21,1 (0.82)	11,5 (0.45)
6	0.563"-18 UNF-2B	24,7 (0.96)	12,7 (0.50)
8	0.750"-16 UNF-2B	30,2 (1.18)	14,2 (0.56)
10	0.875"-14 UNF-2B	34,2 (1.34)	16,6 (0.65)
12	1.062"-12 UN-2B	41,3 (1.62)	19,0 (0.75)
16	1.312"-12 UN-2B	48,6 (1,91)	19,0 (0.75)

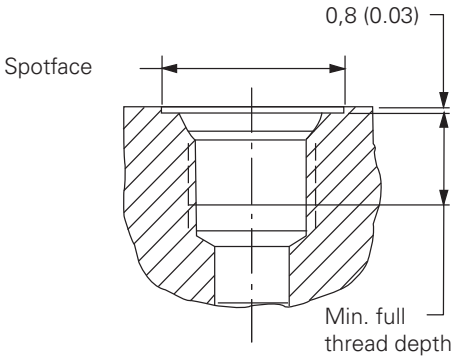

BSPP sizes

BSPP thread size	Minimum spotface ø	Minimum full thread depth
1/4"	24 (0.94)	12,2 (0.48)
3/8"	27 (1.06)	12,2 (0.48)
1/2"	33 (1.29)	15,0 (0.59)
3/4"	42 (1.65)	16,3 (0.64)
1"	47 (1.85)	19,1 (0.75)

M

Where measurements are critical request certified drawings. We reserve the right to change specifications without notice.

Port dimensions

Short port – Straight thread O–Ring boss – SP–**

Note: To be used for SAE plugged construction holes only. Not intended to be used for external porting with standard fittings.

Dash No.	Nominal tubing	Millimeter	Thread size	J full	K	
	O.D.d	mm (inch)	SAE J475 ISO R725 inch	Thd depth min.	+0.4 –0.0 mm	(+0.015 –0.000) (inch)
02	0.125″	–	5 /16 –24UNF–2B	.31″	1.9	(0.07)
03	0.1875″	4 (0.1575)	3 /8 –24UNF–2B	.31″	1.9	(0.074)
04	0.250″	6 (0.235)	27/16 –20UNF–2B	.35″	2.4	(0.093)
05	0.3125″	8 (0.3150)	1/2 –20UNF–2B	.36″	2.4	(0.093)
06	0.375″	10 (0.3937)	9/16 –18UNF–2B	.38″	2.5	(0.097)
08	0.500″	12 (0.4724)	3/4 –16UNF–2B	.45″	2.5	(0.100)
10	0.625″	16 (0.6299)	7/8 –14UNF–2B	.50″	2.5	(0.100)
12	0.750″	–	1-1/16 –12UN–2B	.59″	3.3	(0.130)
16	1.000″	25 (0.9842)	1-5 /16 –12UN–2B	.59″	3.3	(0.130)

a Diameter U shall be concentric with thread pitch diameter within 0.0005 in. (0.13mm) FIR, and shall be free from longitudinal and spiral tool marks. Annular tool marks up to 100 mu in. max. are allowed.

b If face of boss is on a machined surface, dim. Y and S need not apply.

c Tap drill depths given require use of bottoming taps to produce the specified full thread lengths. Where standard taps are used, the tap drill depths must be increased accordingly.

d Nominal tubing O.D. is shown for the standard inch sizes and the conversion to equivalent to mm sizes. Figures are for reference only, as any boss can be used for a tubing size, depending upon other design criteria.

Dash no.	O		P[c]	S[b]	U Dia.[a]		Y	Z
	Min. mm	Dia. inch	Min. inch	Min. inch	+0.005 –0.000 inch	+0.13 –0.0 mm	inch	± 1°
02	0.438	11	0.468″	0.0312″	0.358	9.1	0.439″	12
03	0.500	13	0.468″	0.0312″	0.421	10.7	0.531″	12
04	0.563	15	0.438″	0.0312″	0.487	12.4	0.594″	12
05	0.625	16	0.438″	0.0312″	0.550	13.9	0.656″	12
06	0.688	18	0.515″	0.0312″	0.616	15.6	0.719″	12
08	0.875	22	0.563″	0.0312″	0.811	20.6	0.906″	15
10	1.000	26	0.625″	0.0312″	0.942	23.9	1.031″	15
12	1.250	32	0.719″	0.0312″	1.148	29.2	1.281″	15
16	1.500	38	0.906″	0.0312″	1.398	35.5	1.562″	15

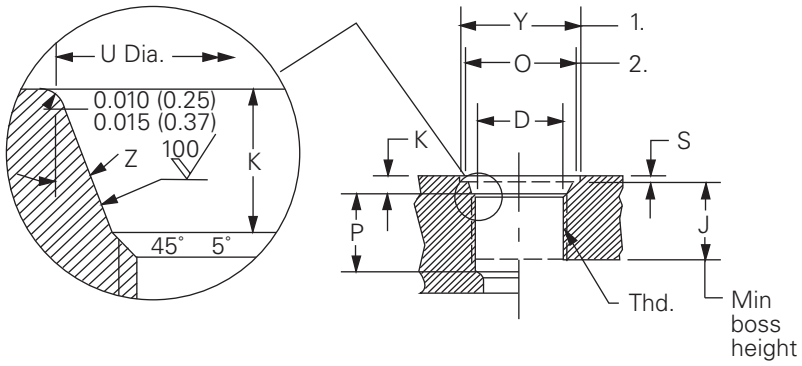

Cavity tools

Roughing tools

Roughers are basically step drills which leave .030" per cutting diameter and .015" above all radii for the finishing reamer, with an additional .015" depth in the cavity bottom as clearance. The roughing tool is necessary to prepare the cavity for the finishing reamer, which has not been designed for the primary forming or bottom cutting.

Cavity	For material	Model code	Part number
2–Way			
C-4-2	Aluminum / Steel	RT-4-2-AS-8306	02-173997
C–8–2	Aluminum / Steel	RT1–8–2–AS–8028	02–165580
C–10–2	Aluminum	RT–10–2–A–8030	889509
C–10–2	Steel	RT–10–2–S–8035	889510
C–12–2	Aluminum / Steel	RT–12–2–AS–8213	02–160625
C–16–2	Aluminum	RT–16–2–A–8031	889515
C–16–2	Steel	RT–16–2–S–8036	889516
C–20–2	Aluminum	RT–20–2–A–8032	565822
C–20–2	Steel	RT–20–2–S–8037	889519
3–Way			
C-4-3	Aluminum / Steel	RT-4-3-AS-8304	02-173271
C–8–3	Aluminum / Steel	RT1–8–3–AS–8291	02–162384
C–10–3	Aluminum	RT–10–3–A–8038	889511
C–10–3	Steel	RT–10–3–S–8043	889512
C–12–3	Aluminum / Steel	RT–12–3–AS–8217	02–153261
C–16–3	Aluminum	RT–16–3–A–8039	565825
C–16–3	Steel	RT–16–3–S–8044	889517
C–20–3	Aluminum	RT–20–3–A–8041	02–165581
C–20–3	Steel	RT–20–3–S–8046	566706
3–Way short			
C–10–3S	Aluminum	RT–10–3S–A–8099	565824
C–10–3S	Steel	RT–10–3S–S–8209	566703
C–12–3S	Aluminum / Steel	RT–12–3S–AS–8220	02–113178
C–16–3S	Aluminum	RT–16–3S–A–8040	02–165582
C–16–3S	Steel	RT–16–3S–S–8045	566704
C–20–3S	Aluminum	RT–20–3S–A–8042	889520
C–20–3S	Steel	RT–20–3S–S–8047	566705
4–Way			
C–8–4	Aluminum / Steel	RT–8–4–AS–8292	02–172803
C–10–4	Aluminum	RT–10–4–A–8072	889513
C–10–4	Steel	RT–10–4–S–8073	889514
C–12–4	Aluminum	RT–12–4–A–8313	02-176377
C–16–4	Aluminum	RT–16–4–A–8074	889518
C–16–4	Steel	RT–16–4–S–8075	565828
C–20–4	Aluminum	RT–20–4–A–8076	565829
C–20–4	Steel	RT–20–4–S–8077	566707
5–Way short			
C–12–5S	Aluminum	RT–12–5–A–8350	02-187301
C–12–5S	Steel	RT–12–5–S–8358	02-187309
C–16–5S	Aluminum	RT–16–5–A–8352	02-187303
C–16–5S	Steel	RT–16–5–S–8360	02-187311
C–20–5S	Aluminum	RT–20–5–A–8354	02-187305
C–20–5S	Steel	RT–20–5–S–8356	02-187307

Where measurements are critical request certified drawings. We reserve the right to change specifications without notice.

Finishing tools

These finishing tools have been designed as precision reamers for finishing operations only. They are not intended for primary forming or bottom cutting operations. Vickers recommends that a finishing tool only be used in a properly roughed hole. Failure to conform to this practice will produce unsatisfactory size and finishes and possibly break the tool.

Cavity	For material	Model code	Part number
2–Way			
C–4–2	Aluminum	FT–4–2–A–8297	02–182339
C–8–2	Aluminum / Steel	FT1–8–2–AS–8070	02–112933
C–10–2	Aluminum / Steel	FT–10–2–AS–8048	566235
C–12–2	Aluminum / Steel	FT–12–2–AS–8214	02–162162
C–16–2	Aluminum / Steel	FT–16–2–AS–8078	565832
C–20–2	Aluminum / Steel	FT–20–2–AS–8079	565833
3–Way			
C–4–3	Aluminum	FT–4–3–A–8275	02–172006
C–8–3	Aluminum / Steel	FT–8–3–AS–8295	02–171292
C–10–3	Aluminum / Steel	FT–10–3–AS–8050	565834
C–12–3	Aluminum / Steel	FT–12–3–AS–8244	02–163001
C–16–3	Aluminum / Steel	FT–16–3–AS–8080	565836
C–20–3	Aluminum / Steel	FT–20–3–AS–8082	889358
3–Way short			
C–10–3S	Aluminum / Steel	FT–10–3S–AS–8210	566708
C–12–3S	Aluminum / Steel	FT–12–3S–AS–8242	02–162998
C–16–3S	Aluminum / Steel	FT–16–3S–AS–8081	889356
C–20–3S	Aluminum / Steel	FT–20–3S–AS–8083	889359
4–Way			
C–8–4	Aluminum / Steel	FT–8–4–AS–8296	02–171291
C–10–4	Aluminum / Steel	FT–10–4–AS–8052	565838
C–12–4	Aluminum / Steel	FT–12–4–AS–8312	02-175596
C–16–4	Aluminum / Steel	FT–16–4–AS–8084	566571
C–20–4	Aluminum / Steel	FT–20–4–AS–8085	889360
.5–Way short			
C–12–5S	Aluminum	FT–12–5–A–8351	02-187302
C–12–5S	Steel	FT–12–5–S–8359	02-187310
C–16–5S	Aluminum	FT–16–5–A–8353	02-187304
C–16–5S	Steel	FT–16–5–S–8361	02-187312
C–20–5S	Aluminum	FT–20–5–A–8355	02-187306
C–20–5S	Steel	FT–20–5–S–8357	02-187308

Finishing form tools speed & feed for aluminum 6061–T6 (T651)

This information is recommended as a good starting point. Speeds and/or feeds may be increased or decreased depending on actual machining conditions.

Note: Finish form tools may require 1/2 to 1 1/2 second dwell to obtain necessary finish.

CNC Machine tool

Tool size	RPM	IPM
C–10–2	600	4
C–10–3	600	4
C–10–4	600	4
C–16–2	600	4
C–16–3	600	4
C–16–4	500	3
C–20–2	500	3
C–20–3	500	3
C–20–3S	500	3
C–20–4	500	3

Bridgeport / lagun type machines

Tool size	RPM	IPM
C–10–2	800-1000	5-6
C–10–3	800-1000	5-6
C–10–4	800-1000	5-6
C–16–2	800-1000	5-6
C–16–3	800-1000	5-6
C–16–3S	250	2 1/2
C–16–4	250	2 1/2
C–20–2	250	2 1/2
C–20–3	250	2 1/2
C–20–3S	250	2 1/2
C–20–	250	2 1/2

Where measurements are critical request certified drawings. We reserve the right to change specifications without notice.

C–**–2(P)

Dimensions

mm (inch)

Cavity bores can be machined accurately in aluminum or steel. The necessary UNF, or UN threads may be machined using standard small tools, possibly already in your machine shop or from a local tool supplier.

Either you, our customer, or Eaton can design and manufacture customized manifolds or housings dedicated to individual applications. We call the resulting valve packages Hydraulic Integrated Circuits (HIC). Cartridges selected for your application can be accommodated in one or more HICs, according to your requirements.

⚠ Warning

For EPV-10 & CV16-10, the cavity should be machined to the 14,29 (0.562) max diameter (dimension X) and to the maximum depth of 36,0 (1.417) (dimension J)

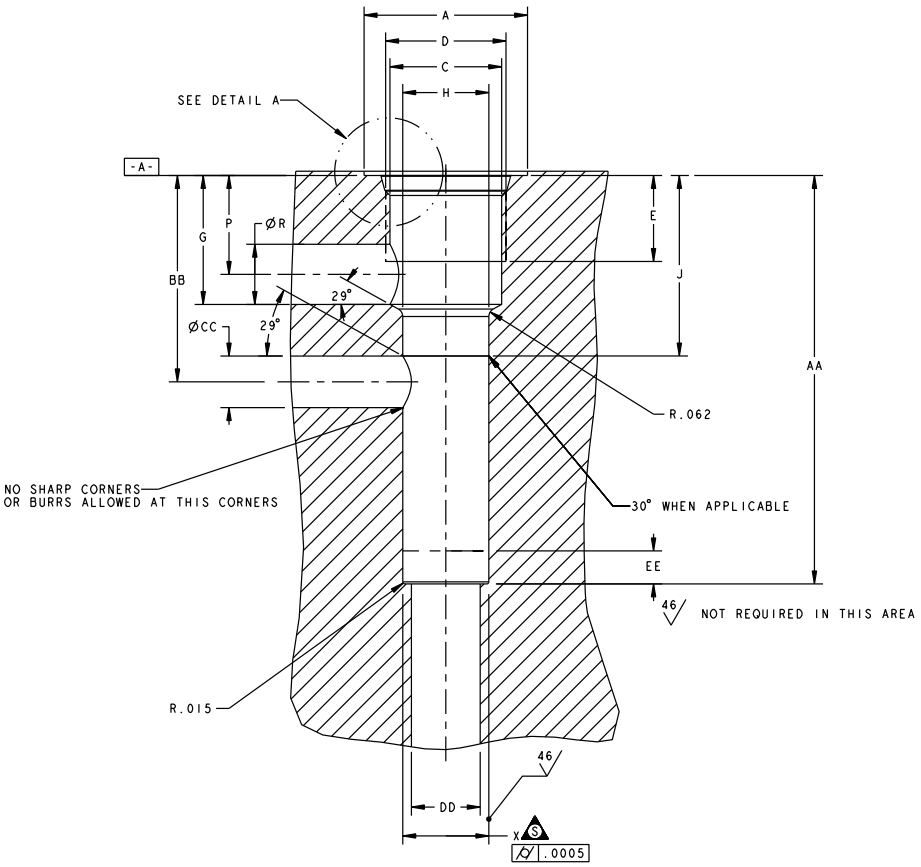

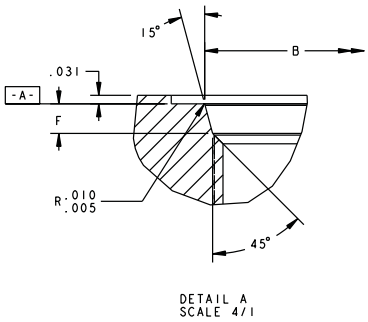

CAVITY	A REF.	B REF.	C REF.	D REF.	E REF.	F REF.	G REF.	H REF.
C-8-2P	1.188	0.813	0.688	0.750	0.500	0.108	0.750	0.501
C-10-2P	1.188	0.945	0.812	0.875	0.625	0.108	0.937	0.626
C-12-2P	1.500	1.148	0.975	1.063	0.875	0.138	1.375	0.938
C-16-2P	1.750	1.401	1.234	1.313	0.875	0.138	1.344	1.127
C-20-2P	2.270	1.716	1.540	1.625	0.813	0.140	1.750	1.439

J REF.	P REF.	R REF.	X	AA	BB	CC	DD	EE
1.188	0.578	0.344	0.501/0.502	2.295	1.328	0.344	0.312	0.24
1.312	0.719	0.438	0.625/0.626	2.969	1.500	0.375	0.500	0.26
1.825	1.100	0.500	0.937/0.9385	3.220	2.000	0.500	0.750	0.24
1.844	0.969	0.750	1.125/1.1265	4.219	2.219	0.750	0.875	0.50
2.312	1.219	1.000	1.437/1.438	5.094	2.844	1.000	1.063	0.63

Where measurements are critical request certified drawings. We reserve the right to change specifications without notice.

Dimensions

mm (inch)

Cavity bores can be machined accurately in aluminum or steel. The necessary UNF, or UN threads may be machined using standard small tools, possibly already in your machine shop or from a local tool supplier.

Either you, our customer, or Eaton can design and manufacture customized manifolds or housings dedicated to individual applications. We call the resulting valve packages Hydraulic Integrated Circuits (HIC). Cartridges selected for your application can be accommodated in one or more HICs, according to your requirements.

⚠ Warning

For EPV-10 & CV16-10, the cavity should be machined to the 14,29 (0.562) max diameter (dimension X) and to the maximum depth of 36,0 (1.417) (dimension J)

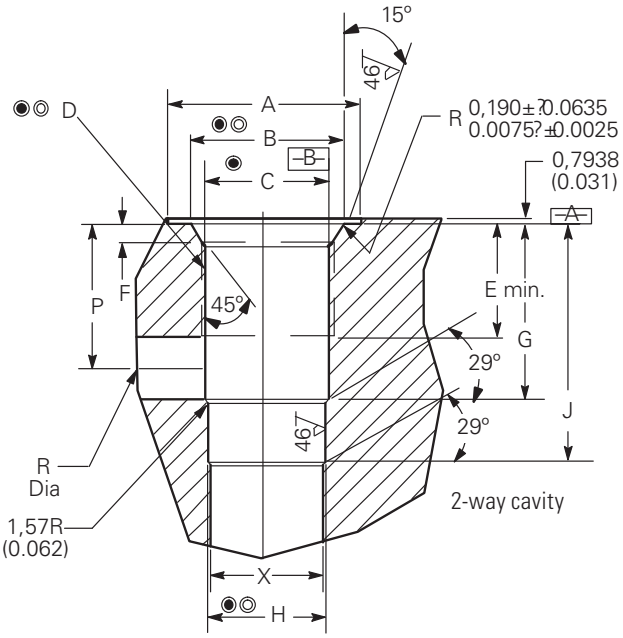

2-way cavity with undercut (u)

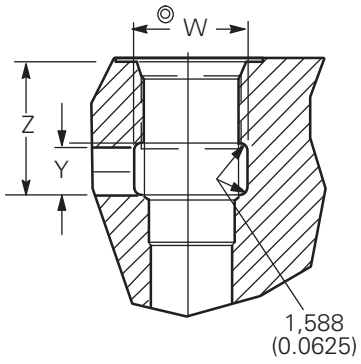

◉ These diameters | 0,051mm (.002 inch) | B | unless otherwise specified

◎ These diameters | ⊥ | 0,025mm (.001 inch) | A | unless otherwise specified

Cavity	A	B	C	D	E	F	G	H	J	P	R	X
mm (inch)	Spotface	+0,051 (+0.002)	±0,051 (±0.002)	Thread	Full thread			±0,0254) (±0.001)		Max. Dia.	Max. Dia.	
C-4-2	21,03 (0.828)	12,37 (0.487)	9,80 (0.386)	.4375"—20	9,53 (0.375)	2,36-2,74 (0.093-0.108)	15,49 (0.610)	8,74 (0.344)	23,37 (0.920)	9,93 (0.391)	6,35 (0.250)	6,35 (0.25)
C-8-2	30,16 (1.188)	20,65 (0.813)	17,47 (0.688)	.750"—16	12,70 (0.500)	2,54-2,92 (0.100-0.115)	19,05 (0.750)	12,72 (0.501)	30,17 (1.188)	14,68 (0.578)	8,74 (0.344)	11,11 (0.438)
C-10-2	30,16 (1.188)	24,00 (0.945)	20,62 (0.812)	.875"—14	15,88 (0.625)	2,54-2,92 (0.100-0.115)	23,81 (0.937)	15,90 (0.626)	33,32 (1.312)	18,23 (0.718)	11,11 (0.437)	14,29 (0.562)
C-12-2(U)	38,10 (1.500)	29,15 (1.148)	24,76 (0.975)	1.062"—12	22,22 (0.875)	3,30/3,68 (0.130-0.145)	34,92 (1.375)	23,82 (0.938)	46,35 (1.825)	27,94 (1.100)	12,70 (0.500)	22,22 (0.875)
C-16-2	44,45 (1.750)	35,58 (1.401)	31,34 (1.234)	1.312"—12	22,22 (0.875)	3,30/3,68 (0.130-0.145)	34,14 (1.344)	28,62 (1.127)	46,84 (1.844)	24,60 (0.968)	19,05 (0.750)	19,05 (0.750)
C-20-2	57,66 (2.270)	43,59 (1.716)	39,12 (1.540)	1.625"—12	20,64 (0.812)	3,35/3,73 (0.132-0.147)	44,45 (1.750)	36,55 (1.439)	58,72 (2.312)	30,96 (1.218)	25,40 (1.000)	30,16 (1.188)

Cavity	W	Y	Z
mm (inch)			
C-12-2U (only)	30,82 (1.214)	12,70 (0.500)	34,29 (1.350)

Where measurements are critical request certified drawings. We reserve the right to change specifications without notice.

C-**-3 Cavity dimensions

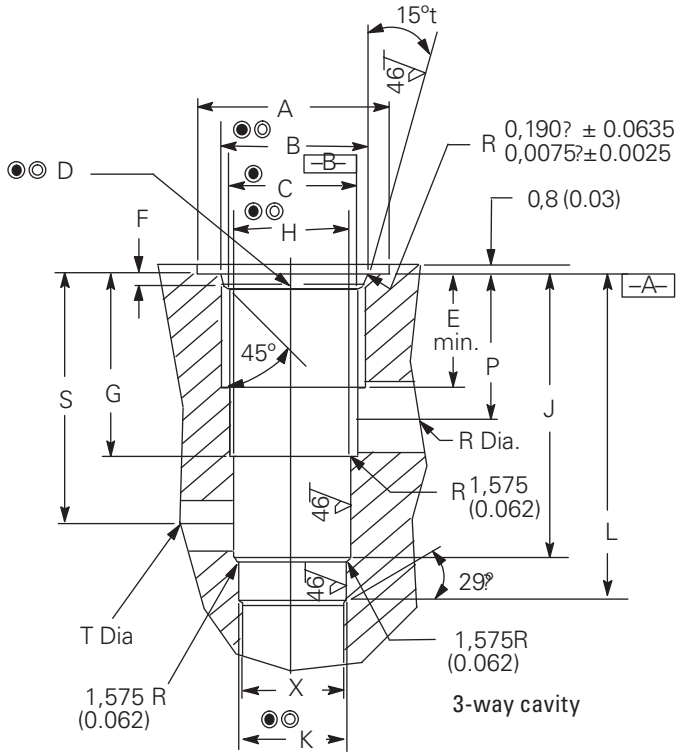

These diameters

↗	0,051mm (.002 inch)	B

unless otherwise specified

These diameters

⊥	0,025mm (.001 inch)	A

unless otherwise specified

Cavity	A	B	C	D	E	F	G	H
mm (inch)	Spotface	±0,051 (±0.002)	±0,051 (±0.002)	Thread	Full thread			(±0,0254) (±0.001)
C-4-3	21,03 (0.828)	12,37 (0.487)	9,80 (0.386)	.4375"—20	9,53 (0.375)	2,36-2,74 (0.093-0.108)	15,49 (0.610)	8,74 (0.344)
C-8-3	30,16 (1.188)	20,65 (0.813)	17,47 (0.688)	.750"—16	12,70 (0.500)	2,54-2,92 (0.100-0.115)	18,23 (0.718)	15,90 (0.626)
C-10-3	30,16 (1.188)	24,00 (0.945)	20,62 (0.812)	.875"—14	15,87 (0.625)	2,54-2,92 (0.100-0.115)	21,59 0.850)	17,50 (0.689)
C-12-3	38,10 (1.500)	29,15 (1.148)	24,76 (0.975)	1.062"—12	22,22 (0.875)	3,30-3,68 (0.130-0.145)	34,92 (1.375)	23,82 (0.938)
C-16-3	44,45 (1.750)	35,58 (1.401)	31,34 (1.234)	1.312"—12	22,22 (0.875)	3,30-3,68 (0.130-0.145)	34,13 (1.344)	28,62 (1.127)
C-20-3	57,66 (2.270)	43,59 (1.716)	39,12 (1.540)	1.625"—12	20,64 (0.812)	3,35-3,73 (0.132-0.147)	44,45 (1.750)	36,55 (1.439)

Cavity	J	K	L	P	R	S	T	X
mm (inch)		(±0,0254) (±0.001)			Max. Dia.		Max. Dia.	Max. Dia.
C-4-3	30,05 (1.183)	7,95 (0.313)	38,10 (1.500)	9,93 (0.391)	6,35 (0.25)	24,61 (0.969)	6,35 (0.25)	7.14 (0.281)
C-8-3	33,25 (1.270)	14,30 (0.563)	43,25 (1.703)	14,68 (0.578)	5,94 (0.234)	28,98 (1.141)	5,94 (0.234)	12,70 (0.500)
C-10-3	38,10 (1.500)	15,90 (0.626)	47,62 (1.875)	18,26 (0.719)	6,35 (0.250)	34,13 (1.344)	6,35 (0.250)	14,27 (0.562)
C-12-3	57,78 (2.275)	22,25 (0.876)	69,21 (2.725)	27,94 (1.100)	12,70 (0.500)	50,80 (2.000)	12,70 (0.500)	20,62 (0.812)
C-16-3	62,71 (2.469)	27,02 (1.064)	75,39 (2.968)	24,60 (0.969)	15,88 (0.625)	53,18 (2.093)	15,88 (0.625)	19,05 (0.750)
C-20-3	85,72 (3.375)	33,38 (1.314)	100,02 (3.938)	30,96 (1.218)	25,40 (1.00)	71,44 (2.812)	25,40 (1.000)	30,16 (1.188)

Where measurements are critical request certified drawings. We reserve the right to change specifications without notice.

Dimensions

mm (inch)

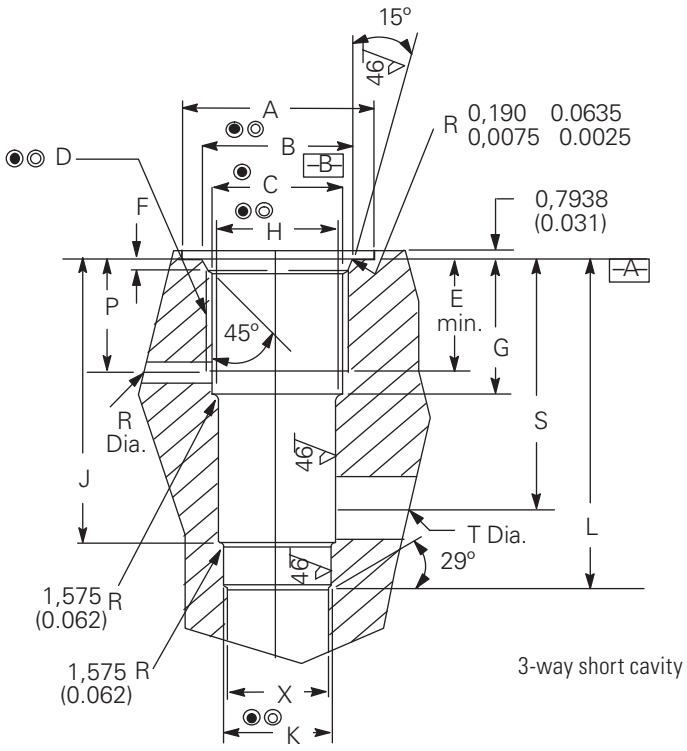

These diameters | 0,051mm (.002 inch) | B | unless otherwise specified

These diameters | 0,025mm (.001 inch) | A | unless otherwise specified

Cavity	A	B	C	D	E	F	G	H
mm (inch)	Spotfac	±0,051 (±0.002)	±0,051 (±0.002)	Thread	Full thread			±0,0254 (±0.001)
C-10-3S	30,16 (1.188)	24,00 (0.945)	20,62 (0.812)	0.875"—14	14,29 (0.562)	2,54-2,92 (0.100-0.115)	16,51 (0.650)	19,08 (0.751)
C-12-3S	38,10 (1.500)	29,15 (1.148)	24,76 (0.975)	1.062"—12	22,22 (0.875)	3,30-3,68 (0.130-0.145)	25,40 (1.000)	23,82 (0.938)
C-16-3S	44,45 (1.750)	35,58 (1.401)	31,34 (1.234)	1.312"—12	17,46 (0.687)	3,30-3,68 (0.130-0.145)	20,62 (0.812)	28,62 (1.127)
C-20-3S	57,66 (2.270)	43,59 (1.716)	39,12 (1.540)	1.625"—12	20,64 (0.812)	3,35-3,73 (0.132-0.147)	23,82 (0.938)	36,55 (1.439)

Cavity	J	K	L	P	R	S	T	X
mm (inch)		±0,0254 (±0.001)	Max. Dia.				Max. Dia.	Max. Dia.
C-10-3S	38,48 (1.515)	17,50 (0.689)	47,62 (1.875)	14,29 (0.562)	3,18 30,96 (0.125)	13,49 (1.218)	15,88 (0.531)	(0.625)
C-12-3S	48,26 (1.900)	22,25 (0.876)	59,69 (2.350)	22,22 (0.875)	4,82 41,27 (0.190)	12,70 (1.625)	20,62 (0.500)	(0.812)
C-16-3S	46,02 (1.812)	25,45 (1.002)	55,58 (2.188)	16,67 (0.656)	6,35 37,31 (0.250)	15,88 (1.468)	19,05 (0.625)	(0.750)
C-20-3S	64,29 (2.531)	33,38 (1.314)	77,77 (3.062)	19,84 (0.781)	6,35 50,00 (0.250)	25,40 (1.968)	30,16 (1.000)	(1.188)

Where measurements are critical request certified drawings. We reserve the right to change specifications without notice.

C-**-4 Cavity dimensions

Dimensions

mm (inch)

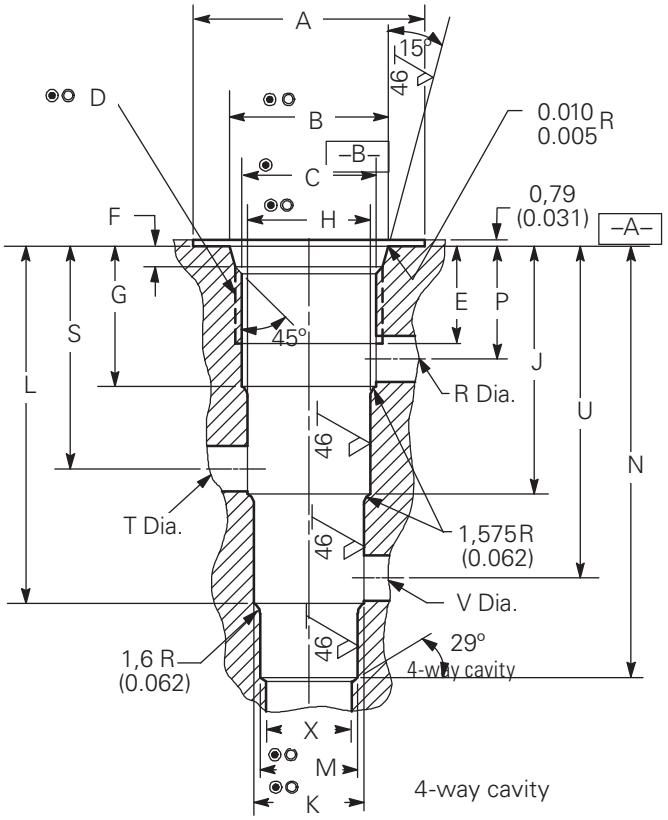

◉ These diameters

↗	0,051mm (.002 inch)	B

unless otherwise specified

◎ These diameters

⊥	0,025mm (.001 inch)	A

unless otherwise specified

Cavity	A	B	C	D	E	F	G	H	J	K
mm (inch)	Spotface	±0,051 (±0.002)	±0,051 (±0.002)	Thread	Full thread			±0,0254 (±0.001)		±0,0254 (±0.001)
C-8-4	30,16 (1.188)	20,65 (0.813)	17,47 (0.688)	0.750"—16	12,70 (0.500)	2,54-2,92 (0.100-0.115)	18,24 (0.718)	15,90 (0.626)	32,26 (1.270)	14,30 (0.563)
C-10-4	30,16 (1.188)	24,00 (0.945)	20,62 (0.812)	0.875"—14	15,88 (0.625)	2,54-2,92 (0.100-0.115)	22,22 (0.875)	19,08 (0.751)	38,10 (1.500)	17,50 (0.689)
C-12-4	38,10 (1.500)	29,15 (1.148)	24,76 (0.975)	1.062"—12	22,22 (0.875)	3,30-3,68 (0.130-0.145)	34,92 (1.375)	23,82 (0.938)	57,78 (2.275)	22,25 (0.876)
C-16-4	44,45 (1.750)	35,58 (1.401)	31,34 (1.234)	1.312"—12	22,22 (0.875)	3,30-3,68 (0.130-0.145)	34,14 (1.344)	28,62 (1.127)	62,71 (2.469)	27,02 (1.064)
C-20-4	57,66 (2.270)	43,59 (1.716)	39,12 (1.540)	1.625"—12	20,64 (0.812)	3,35-3,73 (0.132-0.147)	44,45 (1.750)	36,55 (1.439)	85,72 (3.375)	33,38 (1.314)

Cavity	L	M	N	P	R	S	T	U	V	X
mm (inch)		±0,0254 (±0.001)			Max. Dia.		Max. Dia.			Max Dia.
C-8-4	46,48 (1.830)	12,72 (0.501)	56,13 (2.210)	14,68 (0.578)	5,94 (0.234)	28,98 (1.141)	5,94 (0.234)	43,25 (1.703)	5,94 (0.234)	11,13 (0.438)
C-10-4	53,98 (2.125)	15,90 (0.626)	63,50 (2.500)	18,26 (0.718)	6,35 (0.250)	34,13 (1.343)	6,35 (0.250)	50,00 (1.968)	6,35 (0.250)	14,29 (0.562)
C-12-4	80,64 (3.175)	20,65 (0.813)	92,07 (3.625)	27,94 (1.100)	12,70 (0.500)	50,80 (2.000)	12,70 (0.500)	73,66 (2.900)	12,70 (0.500)	19,05 (0.750)
C-16-4	91,29 (3.594)	25,45 (1.002)	103,99 (4.094)	24,60 (0.968)	15,88 (0.625)	53,16 (2.093)	15,88 (0.625)	81,76 (3.218)	15,88 (0.625)	19,05 (0.750)
C-20-4	127,00 (5.000)	31,78 (1.251)	141,27 (5.562)	30,96 (1.218)	25,40 (1.000)	71,44 (2.812)	25,40 (1.000)	112,71 (4.437)	25,40 (1.000)	30,16 (1.188)

Where measurements are critical request certified drawings. We reserve the right to change specifications without notice.

Dimensions

mm (inch)

⚠ For use with VCB1-10/12 Cartridge Only

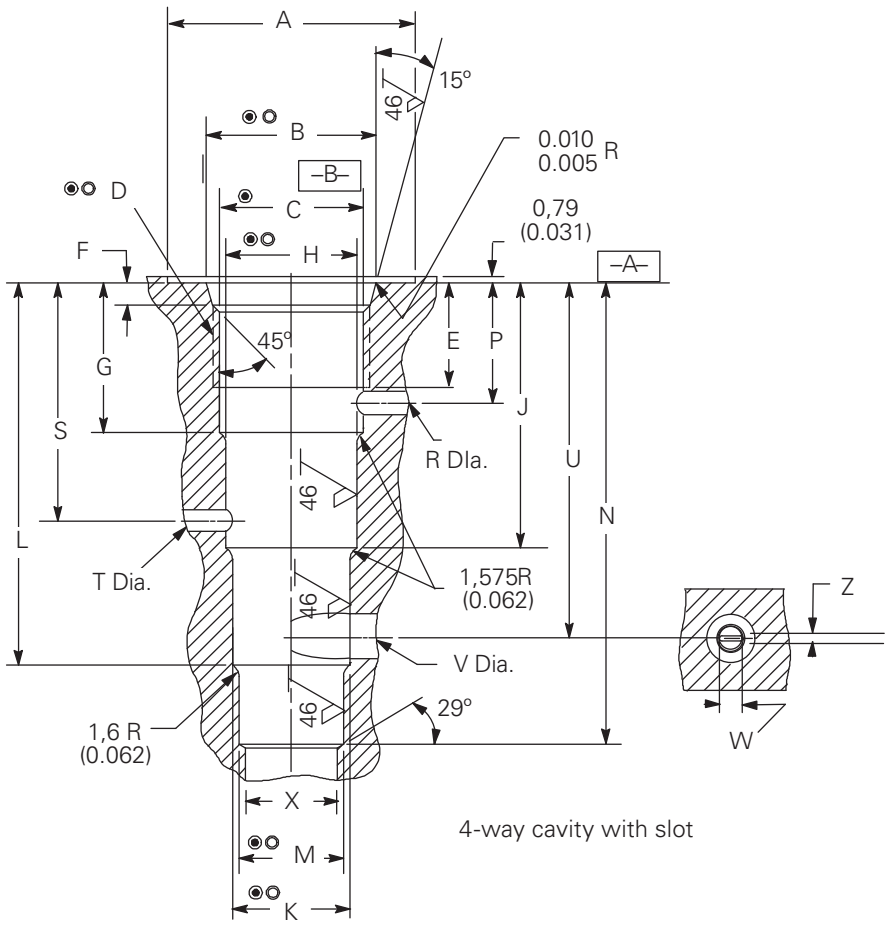

◉ These diameters

0,051mm (.002 inch)	B

unless otherwise specified

◎ These diameters

⊥ 0,025mm (.001 inch)	A

unless otherwise specified

Cavity	A	B	C	D	E	F	G	H	J	K
mm (inch)	Spotface	±0,051 (±0.002)	±0,051 (±0.002)	Thread	Full thread			(±0,0254) (±0.001)		±0,0254 (±0.001)
C-10-4	30,16 (1.188)	24,00 (0.945)	20,62 (0.812)	0.875"—14	15,88 (0.625)	2,54-2,92 (0.100-0.115)	22,22 (0.875)	19,08 (0.751)	38,10 (1.500)	17,50 (0.689)
C-12-4	38,10 (1.500)	29,15 (1.148)	24,76 (0.975)	1.062"—12	22,22 (0.875)	3,30-3,68 (0.130-0.145)	34,92 (1.375)	23,82 (0.938)	57,78 (2.275)	22,25 (0.876)

Cavity	L	M	N	P	R	S	T	U	V	X
mm (inch)		±0,0254 (±0.001)			Max. Dia.		Max. Dia.			Max. Dia.
C-10-4U	53,98 (2.125)	15,90 (0.626)	63,50 (2.500)	19,83 (0.781)	3,17 (0.125)	10,31 (0.406)	3,17 (0.125)	51,58 (2.031)	6,35 (0.250)	14,29 (0.562)
C-12-4U	80,61 (3.175)	20,64 (0.813)	92,04 (3.625)	27,93 (1.100)	12,70 (0.500)	50,78 (2.000)	12,70 (0.500)	73,63 (2.900)	12,70 (0.500)	19,04 (0.750)

Cavity	Thread	W	Z
mm (inch)			
C-10-4U	All	15,9 (0.625)	ø 6,3 (0.25)
C-12-4U	SAE12	22,4 (0.88)	ø 12,6 (0.50)
	1/2" BSPP	17,5 (0.68)	

Where measurements are critical request certified drawings. We reserve the right to change specifications without notice.

C-**-5S
CavityDimensions

Dimensions

mm (inch)

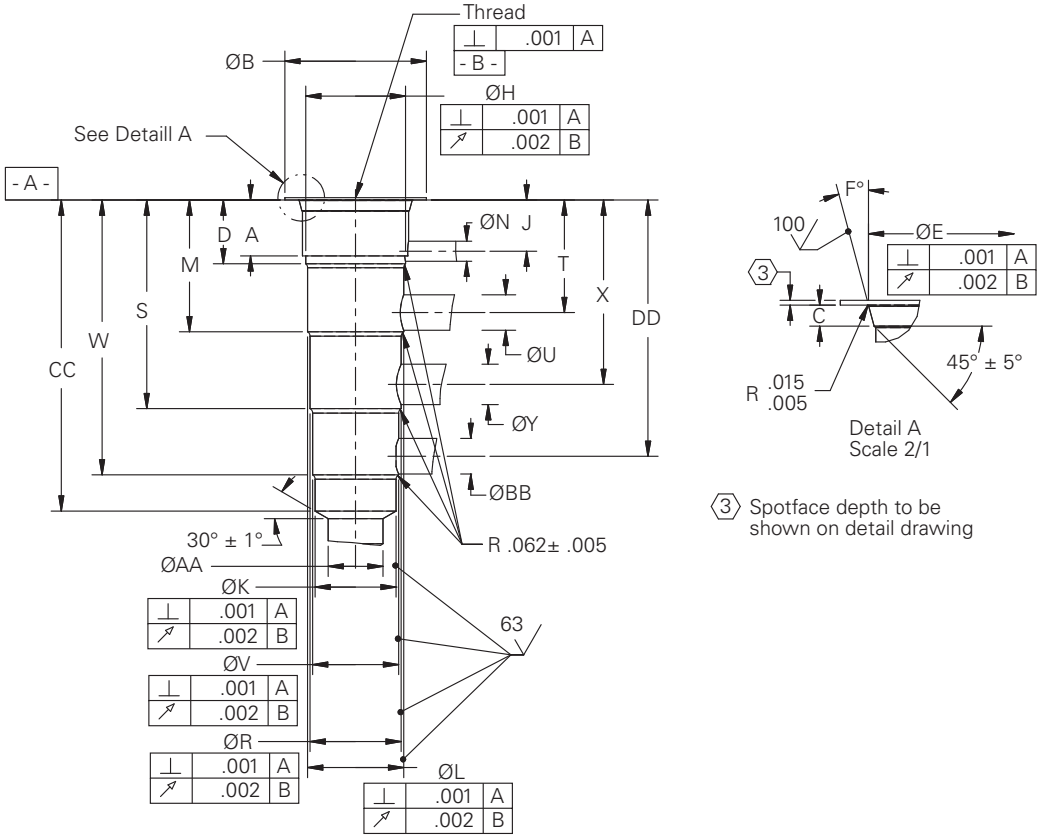

Cavity		A	B	C	D	E	F	H		K	L	M	N
	Thread	±0,13 (±0.005)	±0,13 (±0.005)	+0,38 (+0.005) (-0.0)	±0,13 (±0.005)	±0,05 (±0.002)	±1°	Min	Max	±0,03 (±0.001)	±0,03 (±0.001)	±0,13 (±0.005)	Max
C-8-5S	0.75"—16	12,70 (0.500)	30,16 (1.188)	2,54 (0.100)	14,48 (0.570)	20,65 (0.813)	15	17,42 - 17,52 (0.686-0.690)		11,13 (0.438)	15,90 (0.626)	29,51 (1.162)	3,81 (0.150)
C-10-5S	0.875"—12	15,88 (0.625)	30,16 (1.188)	2,54 (0.100)	22,09 (0.870)	24,00 (0.945)	15	20,57 - 20,67 (0.810-0.814)		14,30 (0.563)	19,08 (0.751)	38,10 (1.500)	6,76 (0.266)
C-12-5S	1.0625"—12	17,53 (0.690)	38,10 (1.500)	2,54 (0.100)	19,79 (0.779)	29,21 (1.150)	15	24,69 - 24,79 (0.972-0.976)		19,08 (0.751)	23,83 (0.938)	38,84 (1.529)	4,78 (0.188)
C-16-5S	1.3125"—12	17,53 (0.690)	44,45 (1.750)	3,30 (0.130)	20,02 (0.788)	35,59 (1.401)	15	31,29 - 31,39 (1.232-1.236)		25,45 (1.002)	30,20 (1.189)	41,40 (1.630)	6,35 (0.250)
C-20-5S	1.625"—12	17,53 (0.690)	57,66 (2.270)	3,35 (0.132)	20,02 (0.788)	43,59 (1.716)	15	39,12 - 39,29 (1.543-1.547)		33,38 (1.314)	38,16 (1.502)	44,45 (1.750)	6,35 (0.250)

Cavity	J	R	S	U	T	V	W	Y	X	AA	BB	CC	DD
	±0,13 (±0.005)	±0,03 (±0.001)	±0,13 (±0.005)	Max	±0,13 (±0.005)	±0,03 (±0.001)	±0,13 (±0.005)	Max	±0,13 (±0.005)	Max	±0,13 Max	±0,13 (±0.005)	(±0.005)
C-8-5S	12,19 (0.480)	14,30 (0.563)	43,79 (1.724)	5,94 (0.234)	26,41 (1.040)	12,72 (0.501)	58,04 (2.285)	5,94 (0.234)	40,64 (1.600)	9,91 (0.390)	5,94 (0.234)	66,80 (2.630)	54,86 (2.160)
C-10-5S	18,26 (0.719)	17,50 (0.689)	53,98 (2.125)	6,75 (0.266)	33,78 (1.330)	15,90 (0..626)	69,85 (2.750)	6,76 (0.266)	49,78 (1.960)	13,00 (0.512)	6,76 (0.266)	79,38 (3.125)	65,79 (2.590)
C-12-5S	15,88 (0.625)	22,25 (0.876)	59,44 (2.340)	9,53 (0.375)	33,32 (1.312)	20.65 (0.813)	78,51 (3.091)	11,13 (0.438)	53,19 (2.094)	17,45 (0.687)	9,53 (0.375)	88,14 (3.470)	73,03 (2.875)
C-16-5S	16,08 (0.633)	28,63 (1.127)	65,56 (2.581)	11,18 (0.440)	35,36 (1.392)	27,03 (1.064)	86,33 (3.399)	12,70 (0.500)	57,94 (2.281)	19,05 (0.750)	11,18 (0.440)	97,69 (3.846)	80,52 (3.170)
C-20-5S	16,00 (0.630)	36,55 (1.439)	70,10 (2.760)	36,83 (0.562)	36,83 (1.450)	34,98 (1.377)	94,23 (3.710)	15,09 (0.594)	61,47 (2.420)	25,40 (1.000)	14,22 (0.560)	106,69 (4.200)	86,61 (3.410)

Where measurements are critical request certified drawings. We reserve the right to change specifications without notice.

Valve	Cavity	Page number
1CE120, 1CEB120, 4CK120, 5CK120	A877	M-21
1CLLR100	A878	M-21
1DR2, 1DR30, 3CA20, 3CP2 S207, S217 (A, H), PDR21A	A879	M-21
1DS30, 1DS100, 1PS100, 1PSC100, 1UPS100, 1PA100	A880	M-21
1AR100, 1ARC100, 1UAR100, 1GR30, 1GR100	A881	M-22
1SB10	A893	M-22
1LR300	A1126	M-22
1PUL200	A3145	M-23
1VR100, 1UL60	A3146	M-23
S229, PPD2 2A	A3531	M-23
1SB304	A5302	M-23
1CE30, 1CER30, 1CEB30, 1CEL30 4CK30, 5CK30, 1PSC30	A6610	M-24
PFR2 4A, PFR21H	A6701	M-24
1CEBD120, 1CPBD120	A6726	M-24
1CE300, 1CEB300, 4CK300, 5CK300	A6935	M-25
2CFRC60, 2CR80	A7447	M-25
1PUL60	A12088	M-26
1CEBD90, 1CPBD90	A12196	M-26
1CE90, 1CEB90, 1CER90, 1CEL90, 4CK(D)90	A12336	M-26
1HP7, 1CLLR50	A12370	M-26
S520(H), S521(H), S525, S526	A12743	M-27
S541, S542, 2CFD50, 4CKKT50	A12744	M-27
1CEBD300, 1CPBD300	A13098	M-27
LE402, 3CA300	A13245	M-28
1VR200, 1PA200, 1PS200	A16102	M-28
1SH10	A16927	M-28

Where measurements are critical request certified drawings. We reserve the right to change specifications without notice.

Cartridge cavities

Index

Valve	Cavity	Page number
1CE140, 1CER140, 1CEL140	A20081	M-28
1CPBD30	A20530	M-29
1RDS702	A21145	M-29
LEV402	A21773	M-29
1CE20	A22903	M-29
1GR60	CVA-20-01-0	M-30
1DS60, 1PS60	CVA-22-06-0	M-30
2CFP60	CVA-27-04-0	M-30
2CFD200	CVB-42-04-0	M-31
1SH60	C-I-M18-3	M-31

Our cavities have been designed to achieve standardization based on each thread size to reduce the amount of tooling required to cover the valve range. All new designs of cartridge are made to fit the ISO recommendations for standard cavities. The diagram below shows the sequence of tooling using tools specified in the following pages.

Note: a pilot drill may be required before the form drill.

Great care must be taken to ensure that the tools are inserted along the same machining axis to maintain correct concentricities, hence bodies should not be moved between operations.

Operation 1
form drill

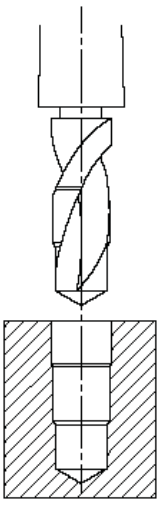

Operation 2
form reamer

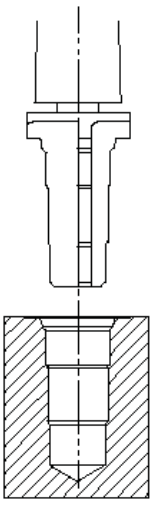

Operation 3
plug tap

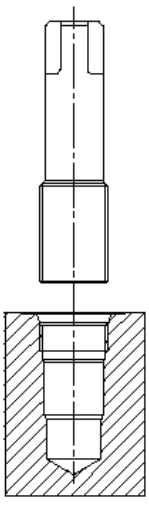

M

Where measurements are critical request certified drawings. We reserve the right to change specifications without notice.

Cavity A877

Cavity tools

Form Drill	A1161
Form Reamer	A1162
Plug Tap	1 5/16-12 UNF

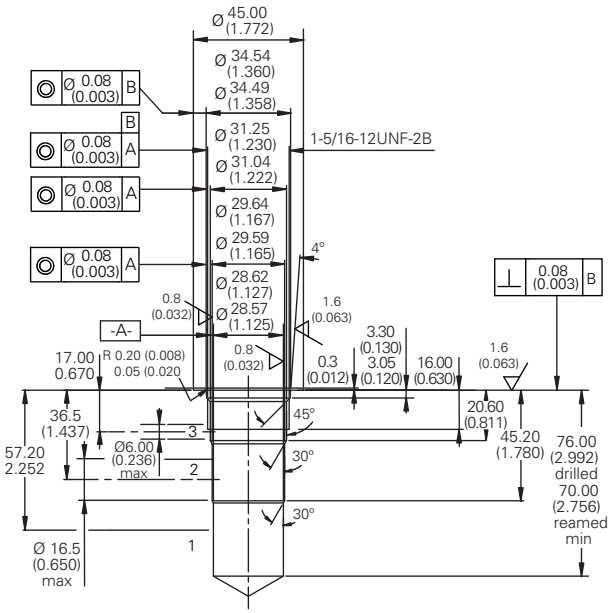

Cavity A878

Cavity tools

Form Drill	A885
Form Reamer	A1173
Plug Tap	7/8-14 UNF

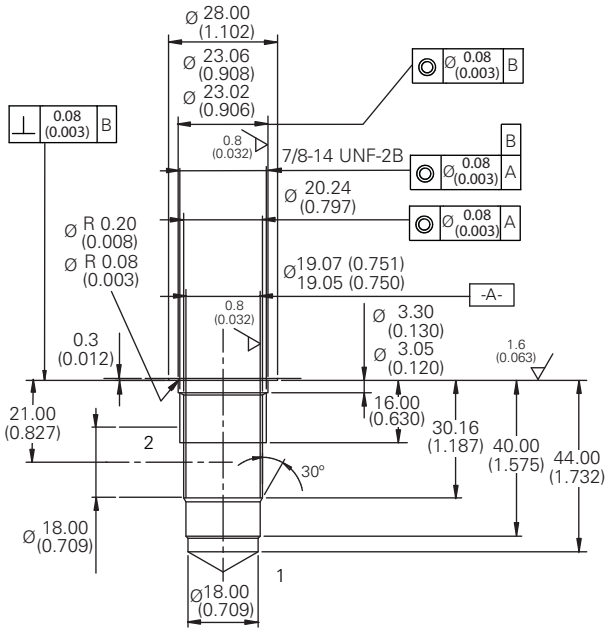

Cavity A879

Cavity tools

Form Drill	A1040
Form Reamer	A1041
Plug Tap	3/4-16 UNF

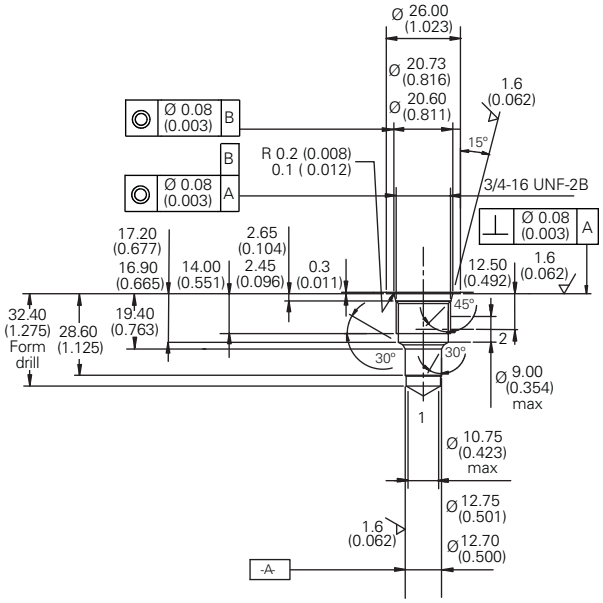

Cavity A880

Cavity tools

Form Drill	A1302
Form Reamer	A1303
Plug Tap	1-14 UNS

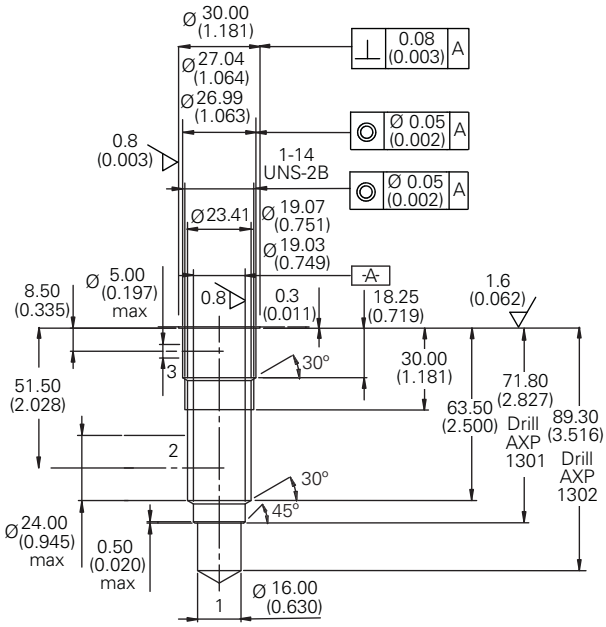

Note: These cavity dimensions are for installation purposes only.

Where measurements are critical request certified drawings. We reserve the right to change specifications without notice.

Cartridge cavities

Cavity A881

Cavity tools

Form Drill	A1183
Form Reamer	A1036
Plug Tap	1 -14 UNF

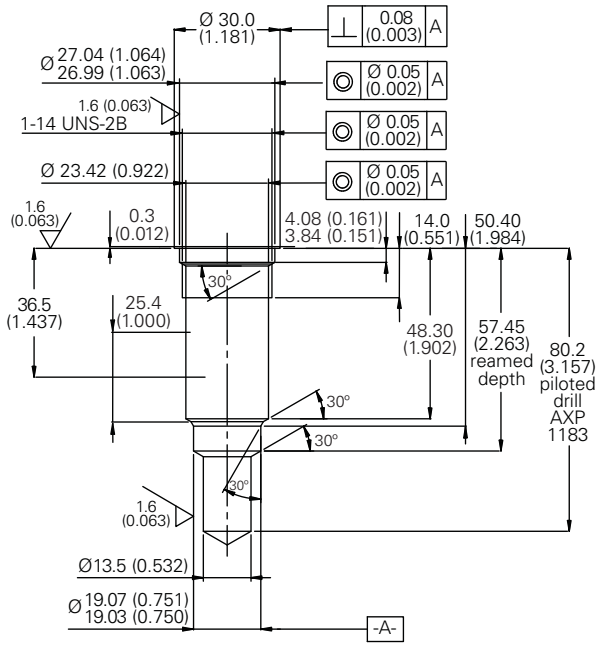

Cavity A893

Cavity tools

Form Drill	A894
Form Reamer	AT491
Plug Tap	7/8-14 UNF

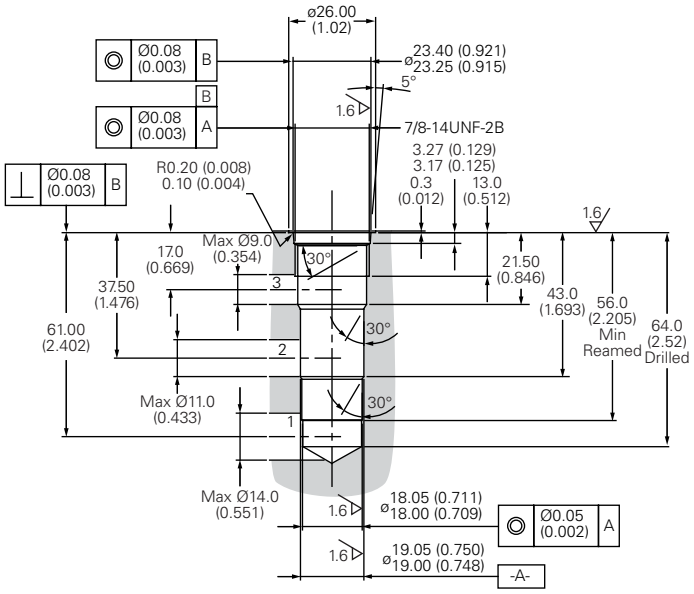

Cavity A1126

Cavity tools

Form Drill	AT422
Form Reamer	AT488
Plug Tap	1 5/8-12 UNF

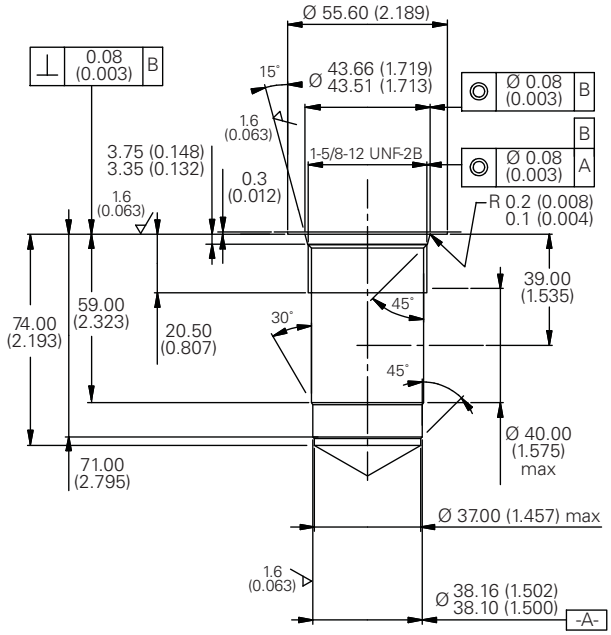

Note: These cavity dimensions are for installation purposes only.

Where measurements are critical request certified drawings. We reserve the right to change specifications without notice.

Cavity A3145

Cavity tools

Form Drill	A3226
Form Reamer	A3227
Plug Tap	1 5/16-12 UN

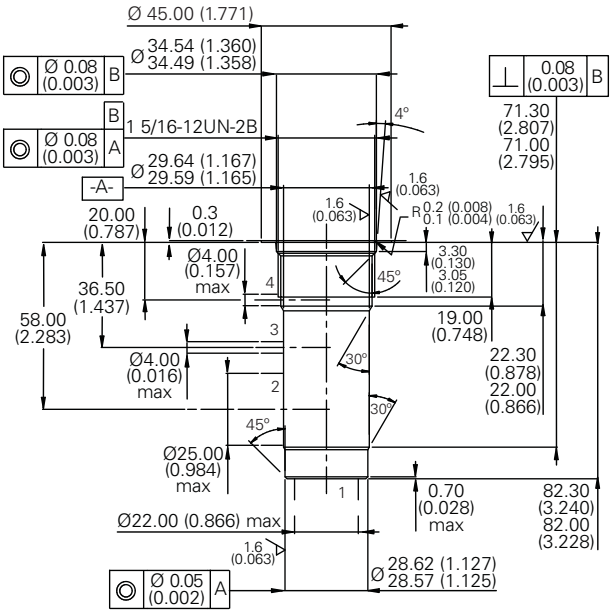

Cavity A3146

Cavity tools

Form Drill	A3315
Form Reamer	A3316
Plug Tap	1 1/8-12 UNF

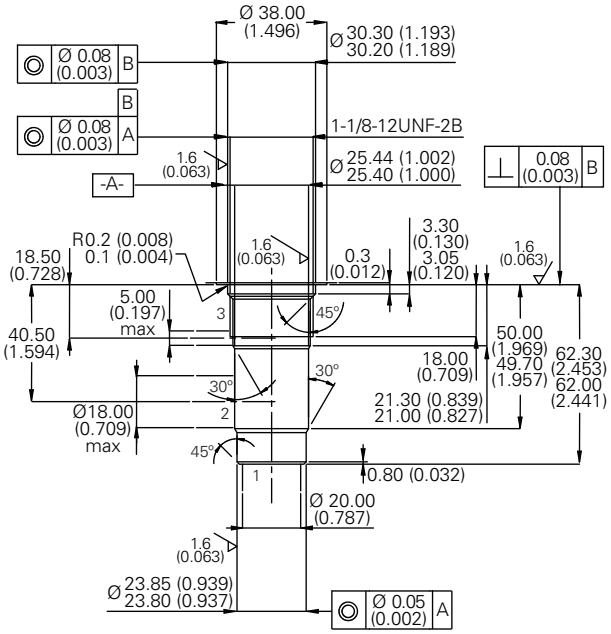

Cavity A3531

Cavity tools

Form Drill	A3538
Form Reamer	A3539
Plug Tap	3/4-16 UNF

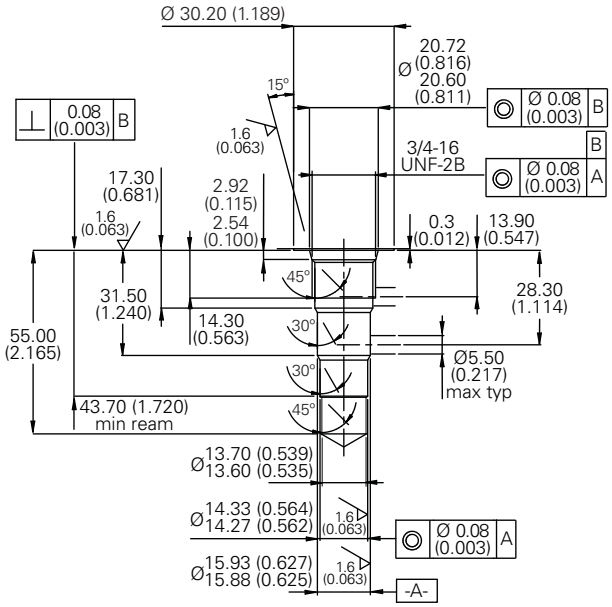

Cavity A5302

Cavity tools

Form Drill	A5668
Form Reamer	A5669
Plug Tap	7/8-14 UNF

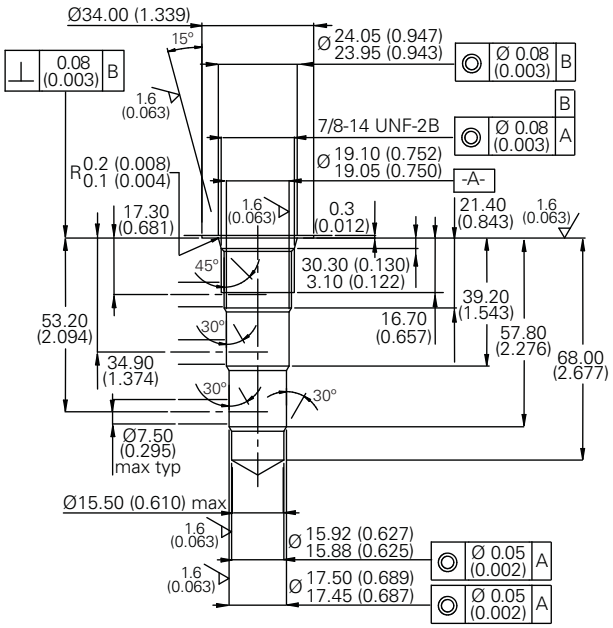

Note: These cavity dimensions are for installation purposes only.

Where measurements are critical request certified drawings. We reserve the right to change specifications without notice.

Cartridge cavities

Cavity A6610

Cavity tools

Form Drill	AT447
Form Reamer	AT448
Plug Tap	M20 x 1.5

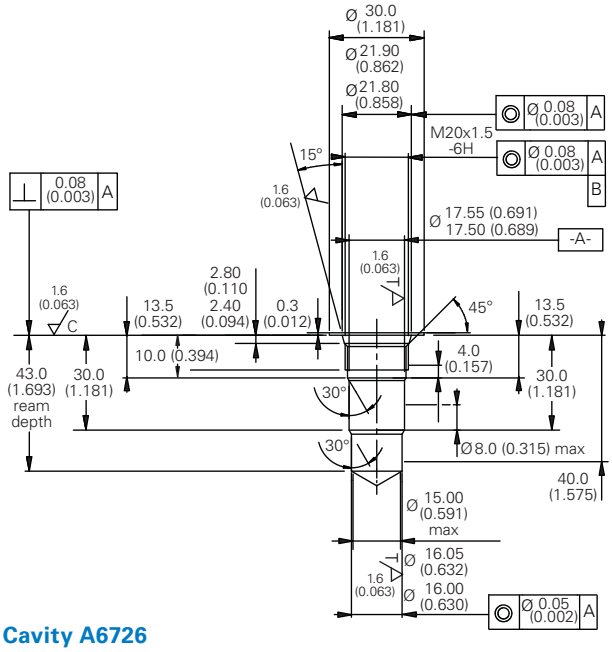

Cavity A6701

Cavity tools

Form Drill	AT482
Form Reamer	AT483
Plug Tap	3/4-16 UNF

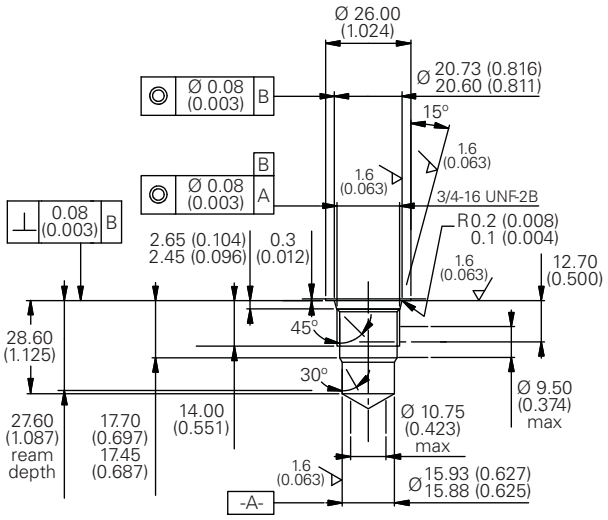

Cavity A6726

Cavity tools

Form Drill	A6933
Form Reamer	A6934
Plug Tap	1 5/16-12 UNF

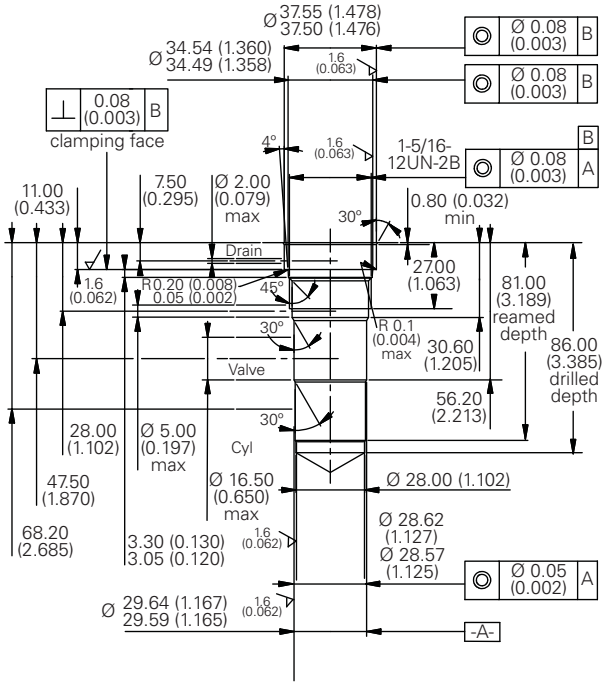

Note: These cavity dimensions are for installation purposes only.

Where measurements are critical request certified drawings. We reserve the right to change specifications without notice.

Cavity A6935

Cavity tools

Form Drill	AT501
Form Reamer	AT502
Plug Tap	1 5/8-12 UN

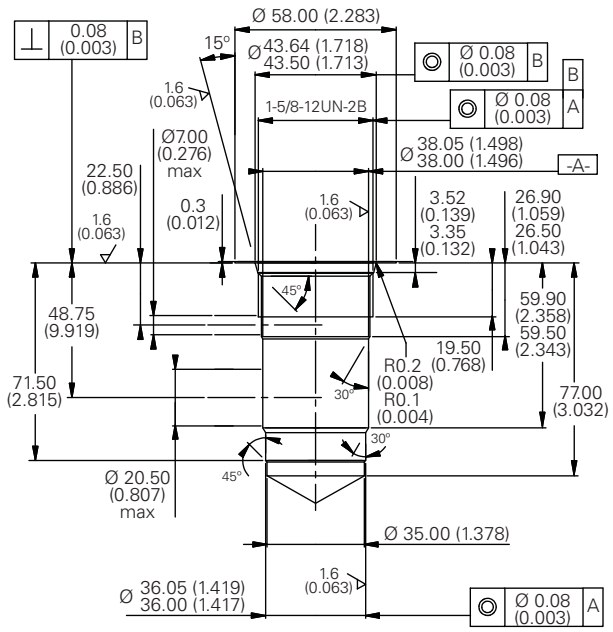

Cavity A7447

Cavity tools

Form Drill	A8115
Form Reamer	A8117
Plug Tap	M27 X 2

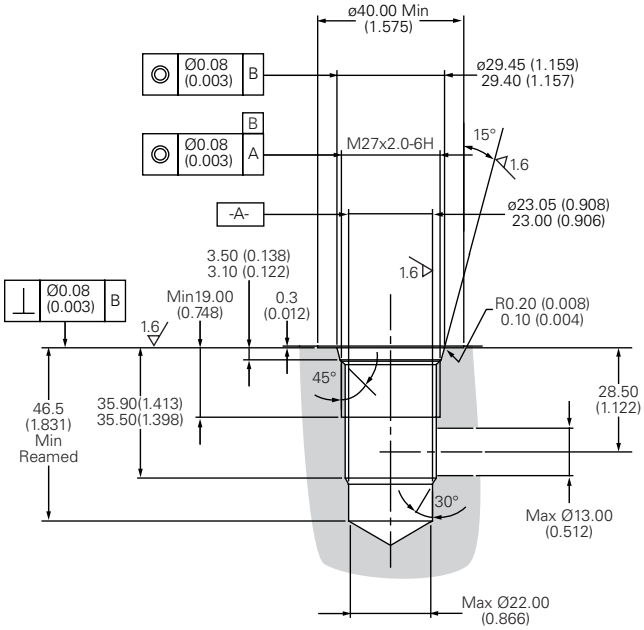

Note: These cavity dimensions are for installation purposes only.

Where measurements are critical request certified drawings. We reserve the right to change specifications without notice.

Cartridge cavities

Cavity A12088

Cavity tools

Form Drill	A3315
Form Reamer	A3316
Plug Tap	1 1/8-12 UNF

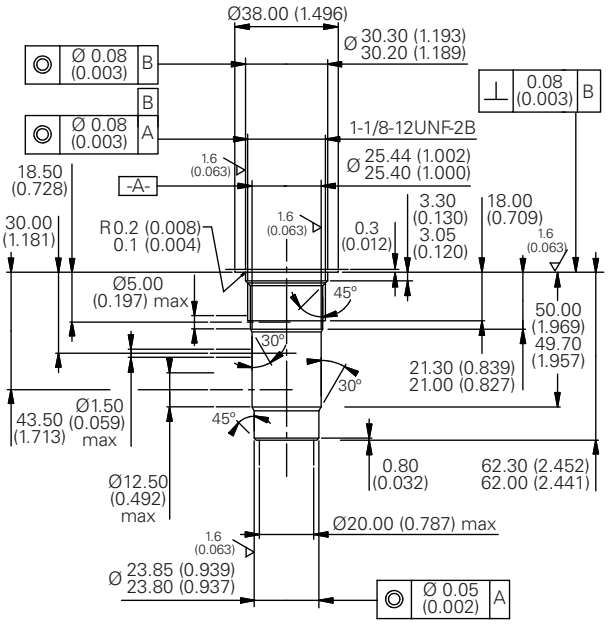

Cavity A12196

Cavity tools

Form Drill	A12197
Form Reamer	A12198
Plug Tap	M27 X 1.5

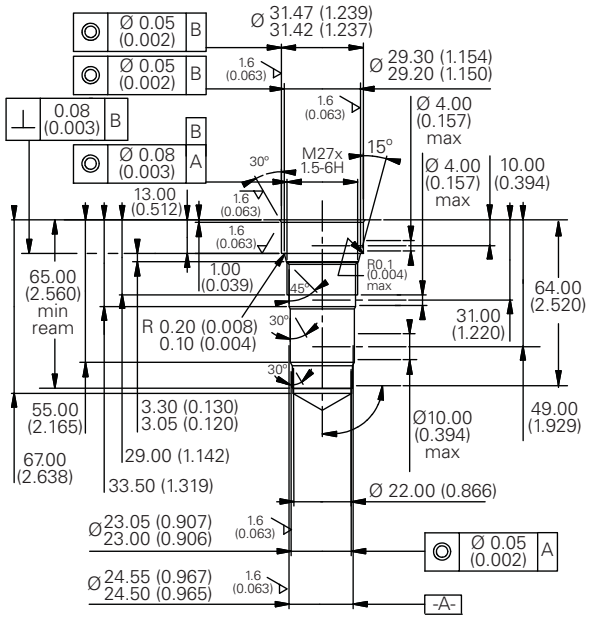

Cavity A12336

Cavity tools

Form Drill	A12337
Form Reamer	A12338
Plug Tap	M27 X 1.5

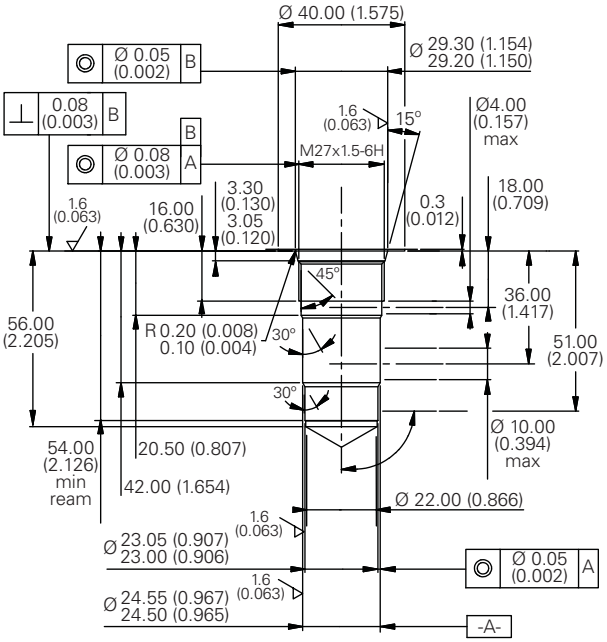

Cavity A12370

Cavity tools

Form Drill	A12439
Form Reamer	A12440
Plug Tap	7/8-14 UNF

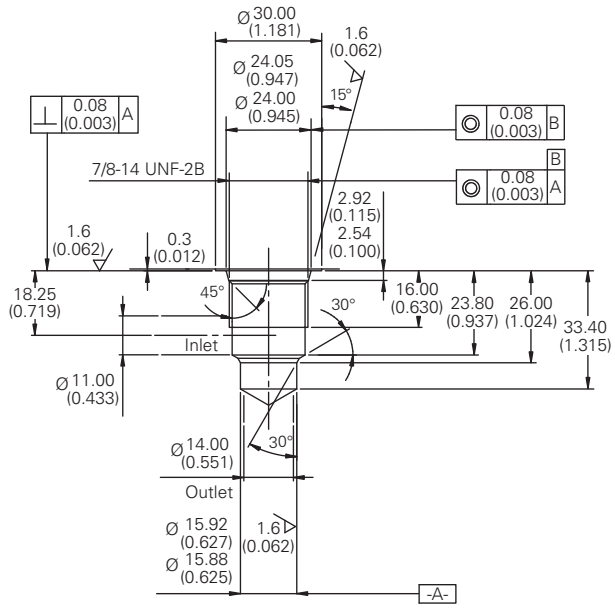

Note: These cavity dimensions are for installation purposes only.

Where measurements are critical request certified drawings. We reserve the right to change specifications without notice.

Cavity A12743

Cavity tools

Form Drill	A12802
Form Reamer	A12803
Plug Tap	7/8"-14 UNF

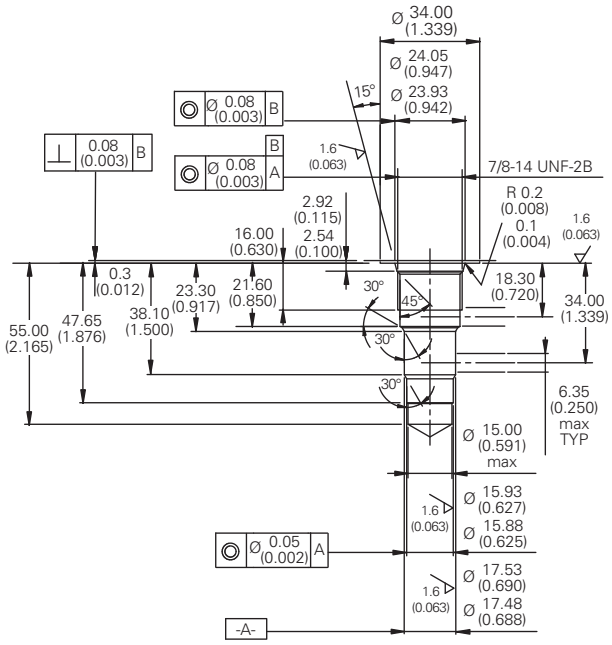

Cavity A13098

Cavity tools

Form Drill	A13099
Form Reamer	A13100
Plug Tap	1 5/8"-12 UN

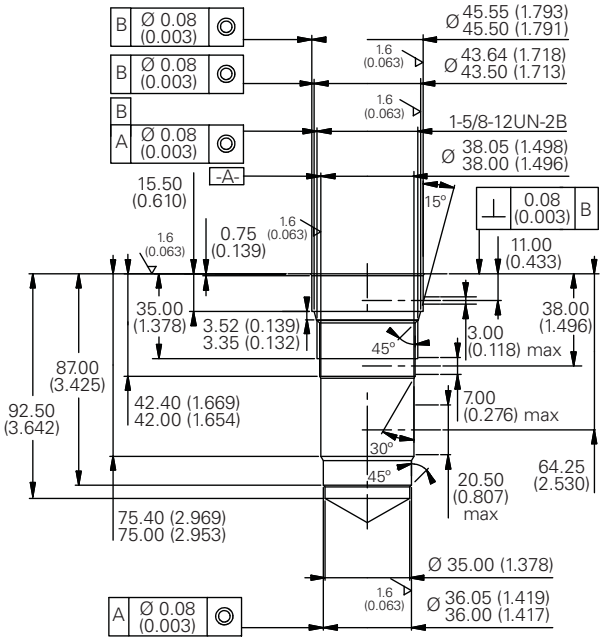

Cavity A12744

Cavity tools

Form Drill	A12804
Form Reamer	A12805
Plug Tap	7/8-14 UNF

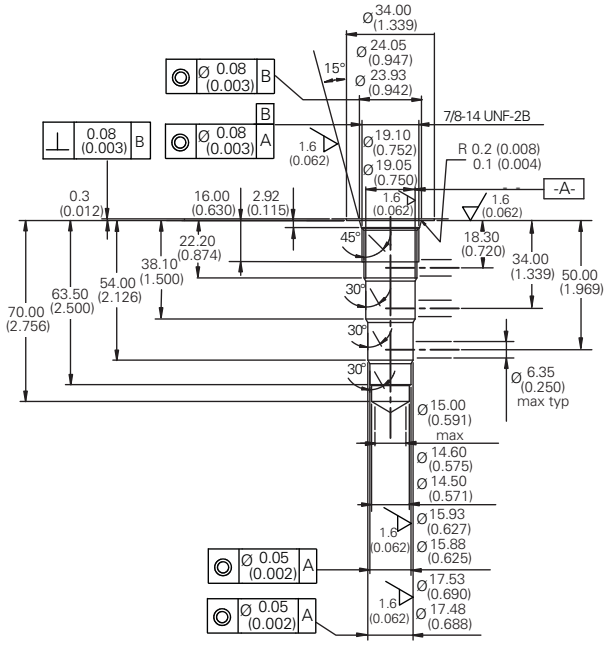

Note: These cavity dimensions are for installation purposes only.

Where measurements are critical request certified drawings. We reserve the right to change specifications without notice.

Cartridge cavities

Cavity A13245

Cavity tools

Form Drill	A13246
Form Reamer	A13247
Plug Tap	1 5/8"-12UNF-2B

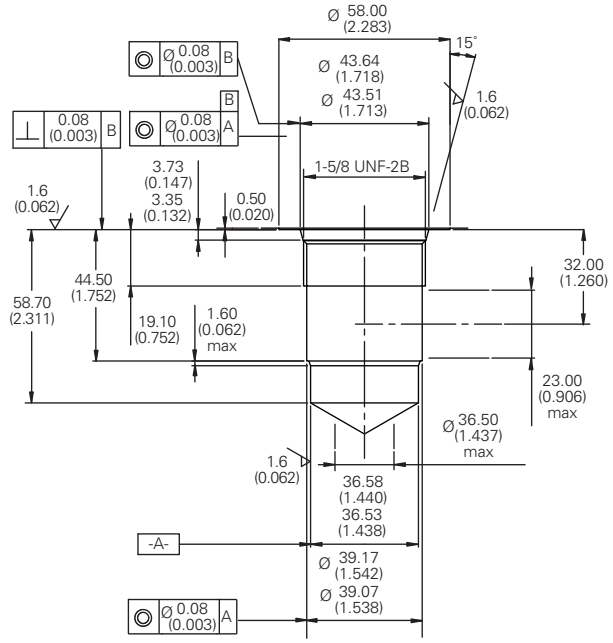

Cavity A16102

Cavity tools

Form Drill	A3226
Form Reamer	A3227
Plug Tap	1 5/16-12UNF-2B

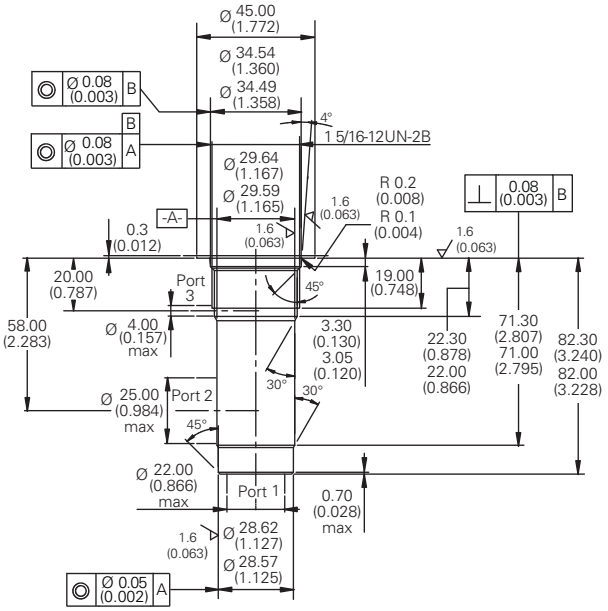

Cavity A16927

Cavity tools

Form Reamer	AT1097
Plug Tap	M10 x 1.0

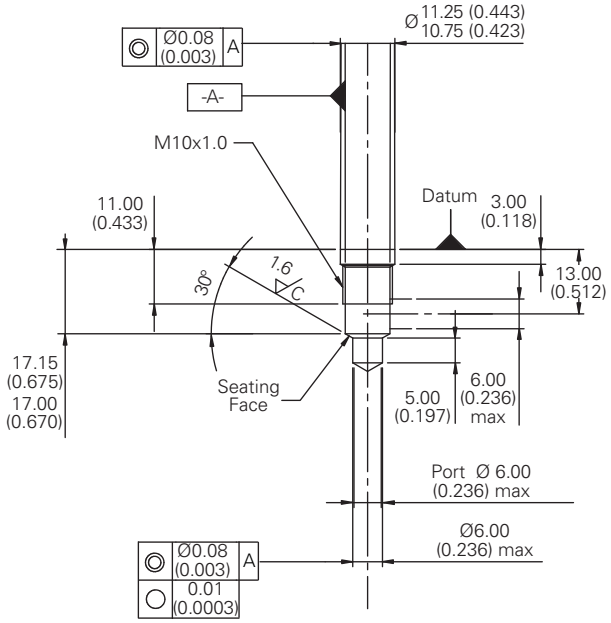

Cavity A20081

Cavity tools

Form Drill	AT2369/1
Form Reamer	AT2369/2
Plug Tap	M38 x 2-6H

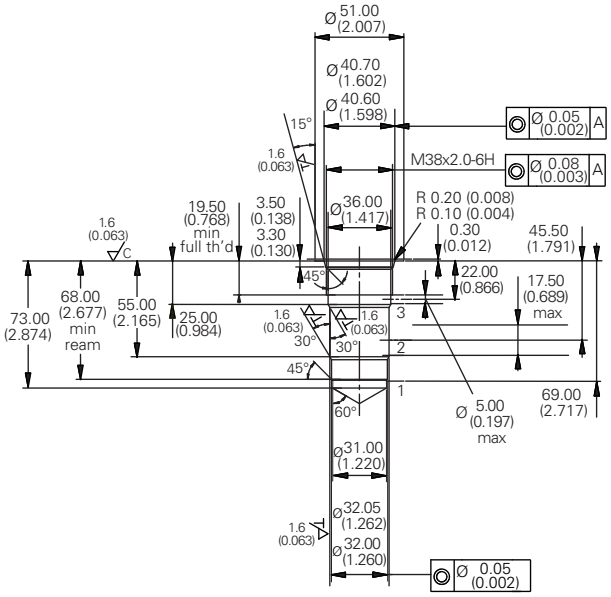

Note: These cavity dimensions are for installation purposes only.

Where measurements are critical request certified drawings. We reserve the right to change specifications without notice.

Cavity A20530

Cavity tools

Form Drill	AT2573
Form Reamer	AT2574
Plug Tap	M20 x 1.5 6H

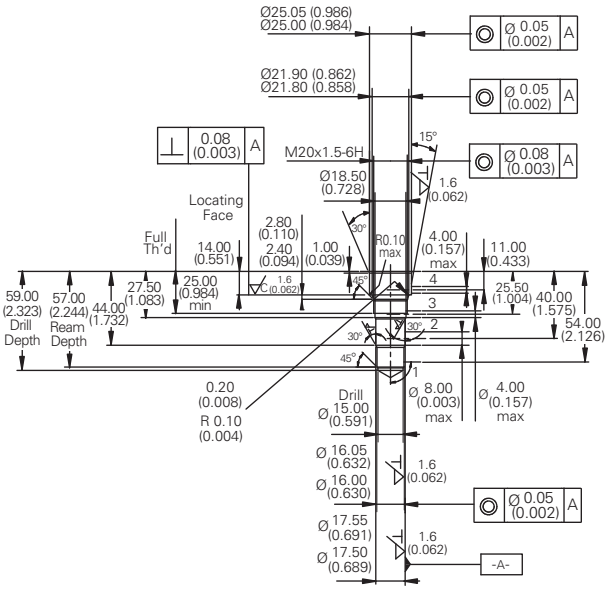

Cavity A21145

Cavity tools

Form Drill	AT2962
Form Reamer	AT2963
Plug Tap	1 1/16 12 UN - 2B

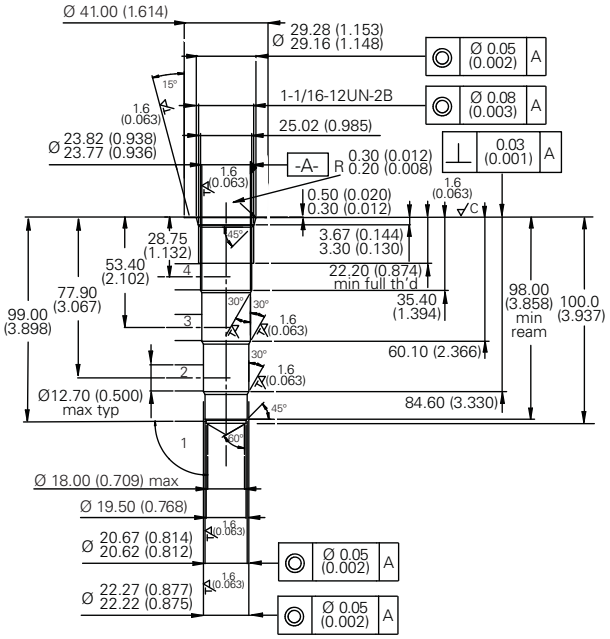

Cavity A21773

Cavity tools

Form Drill	AT3308
Form Reamer	AT3309
Plug Tap	1 5/8"-12UNF-2B

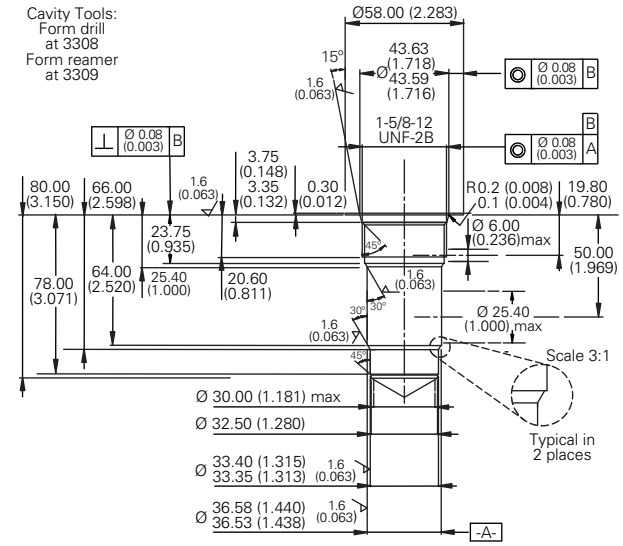

Cavity A22903

Cavity tools

Form Drill	AT3616
Form Reamer	AT3617
Plug Tap	M18x1.5-6H

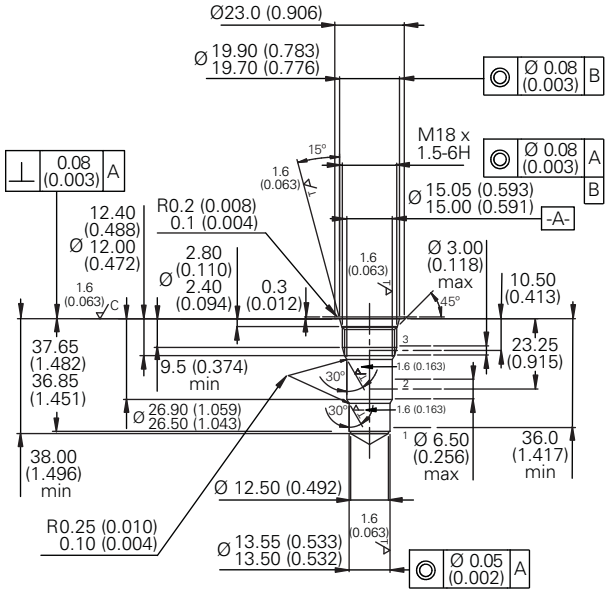

Note: These cavity dimensions are for installation purposes only.

Where measurements are critical request certified drawings. We reserve the right to change specifications without notice.

Cartridge cavities

Cavity CVA- 20- 01- 0

Cavity tools

Form Drill	A8961
Form Reamer	A8962
Plug Tap	M20 X 1.5

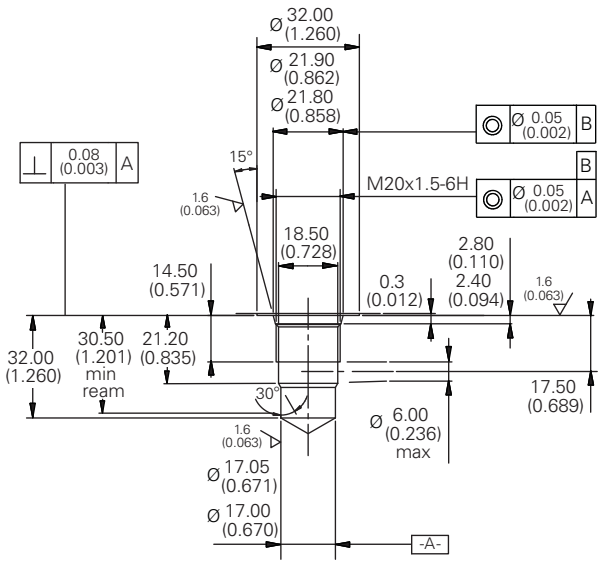

Cavity CVA- 22- 06- 0

Cavity tools

Form Drill	A8966
Form Reamer	A8967
Plug Tap	M22 X 1.5

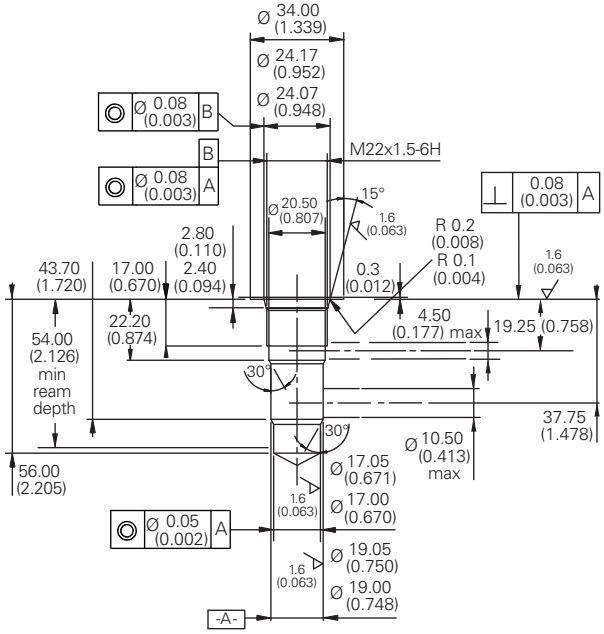

Notes: These cavity dimensions are for installation purposes only.

Cavity CVA- 27- 04- 0

Cavity tools

Form Drill	A12784
Form Reamer	A496
Plug Tap	M27 X 2

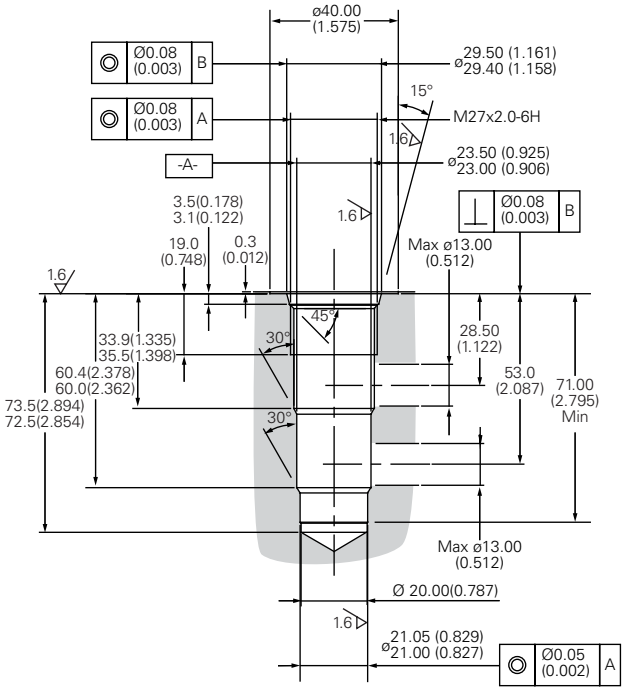

Cavity C-I-M18-3

Cavity tools

Form Drill	---
Form Reamer	---
Plug Tap	---

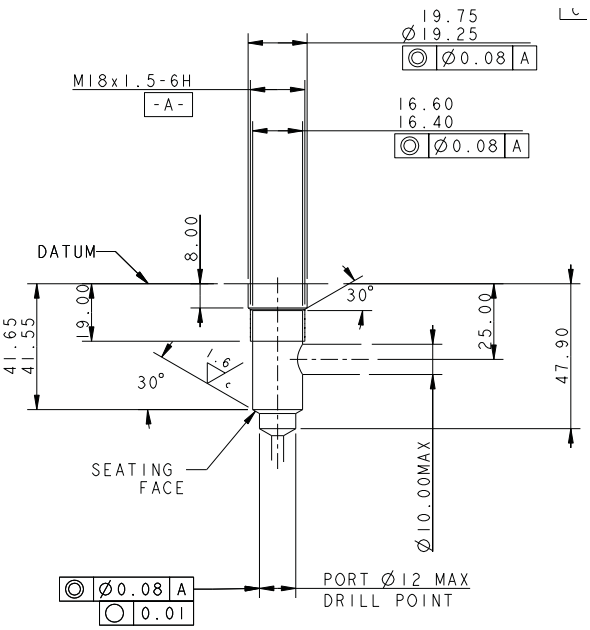

Where measurements are critical request certified drawings. We reserve the right to change specifications without notice.

Cavity CVB- 22- 06- 0

Cavity tools

Form Drill	A8966
Form Reamer	A8967
Plug Tap	M22 X 1.5

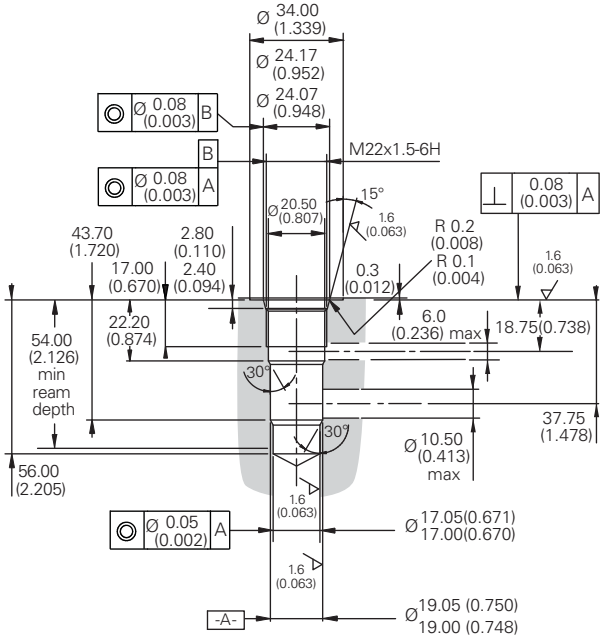

CVB- 42- 04- 0

Cavity tools

Form Drill	BT499
Form Reamer	AT498
Plug Tap	M42 X 2

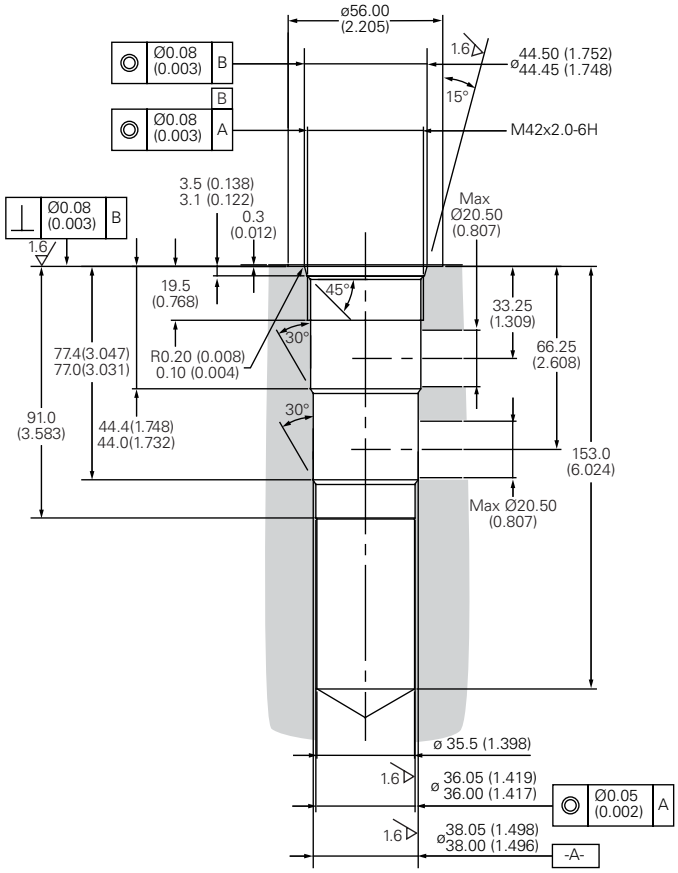

Note: These cavity dimensions are for installation purposes only.

Where measurements are critical request certified drawings. We reserve the right to change specifications without notice.

TC Cavity

Where measurements are critical request certified drawings. We reserve the right to change specifications without notice.

Versatile, Proven, Best Value

Sectional Design for Multiple Configurations

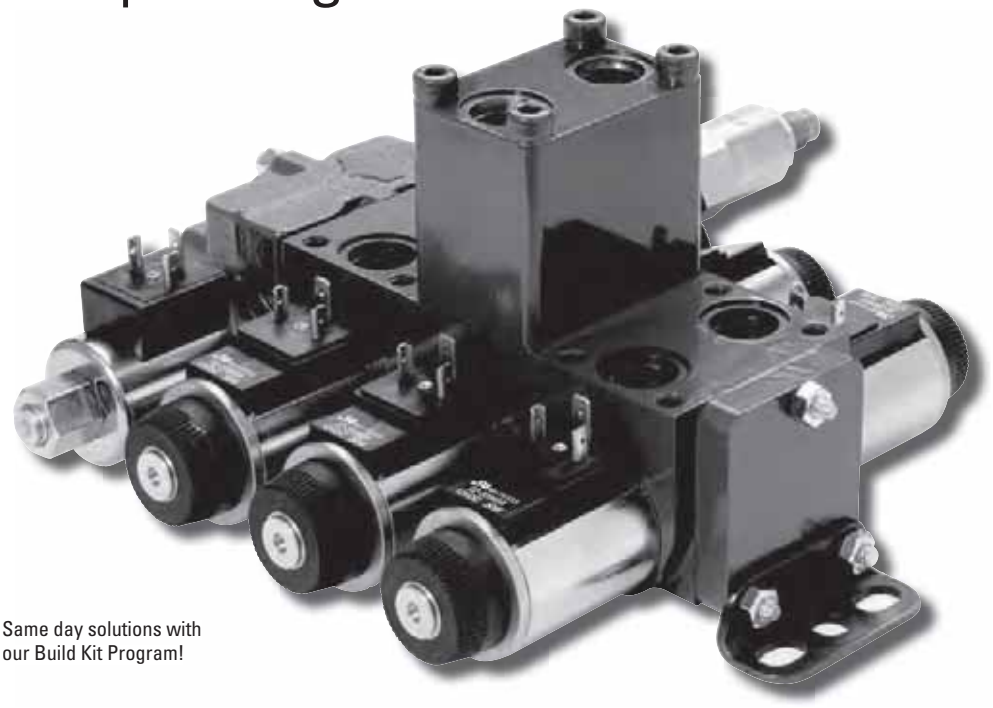

Same day solutions with our Build Kit Program!

EATON
Powering Business Worldwide

MDG Mobile Valve

Eaton's MDG mobile directional control valve uses a modular, versatile design based on our proven Vickers® DG4V3 design.

Eaton® MDG valves, truly designed for mobile applications, offer the traditional benefits of a stackable mobile valve and provide further value as circuit options for mobile manifold systems. This same versatility and flexibility applies to system applications, making it your best value for customized, multi-functional circuits.

For more information, contact your local Eaton distributor, call us at 800-547-7805 or visit us on the web at: www.eaton.com/hydraulics.

Where measurements are critical request certified drawings. We reserve the right to change specifications without notice.

Appendix

Articles of interest and index by model code



Powering Business Worldwide

Appendix

POWERS OF ATTRACTION N-4
KEEPING THINGS IN PROPORTION N-8
OVERCENTER VALVES N-11
BOOMLOC VALVES (DESIGNED & TESTED TO ISO8643) N-15
RELIEF VALVES N-17
HIGHWAY HYDRAULICS N-20
ATTACHMENT VALVES N-23
MAINTAINING EQUILIBRIUM N-25
INDEX N-29
NOTES N-32

Powers of attraction

Article of interest

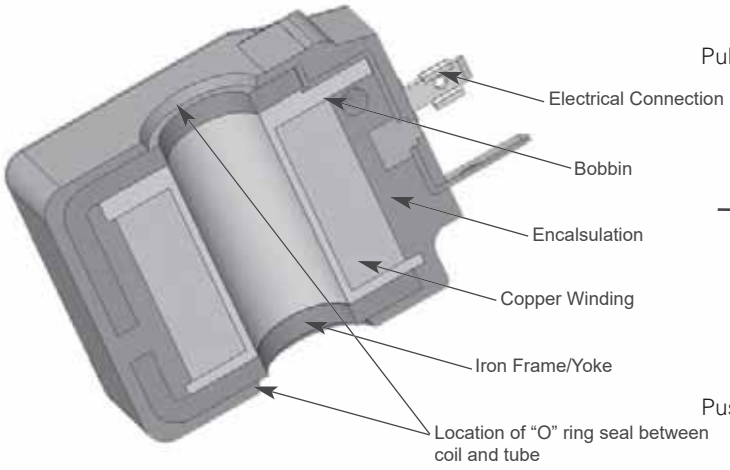

Figure 1. Component parts of a typical solenoid coil

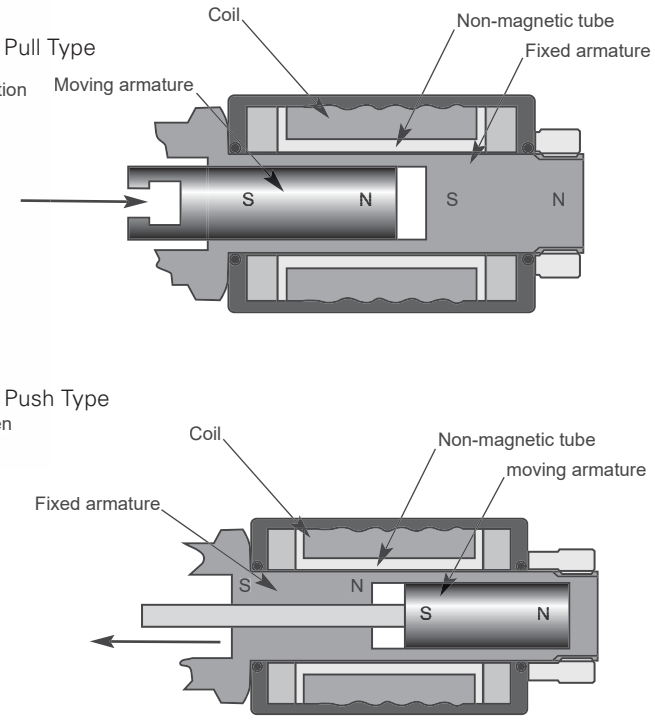

Figure 2. Pull and push type actuators

Electromagnetic force is responsible for practically all phenomena encountered in daily life they maintain the relationship between atoms so every action whether push or pull relies on these invisible forces to create movement.

The use of these forces both magnetic and electrical has a huge impact on our lives. Man has learned to harness them in many ways - generating electricity by movement of magnets or creating magnetism by using electrical current. It is the latter that we rely on the operation of numerous hydraulic valves. We call these solenoid valves where by an electromagnetic actuator provides a force or movement to a hydraulic control element which in turn controls the fluid in a system.

Typically a solenoid valve uses an electromagnetic actuator (see Figure 1), consisting of coils of copper wire wound around a bobbin enclosed in an iron yolk, which is encapsulated in a heat resistant thermosetting plastic.

Various types of connector can be molded into the assembly to give varying degrees of water and dust resistance commonly known as the "IP" rating.

This coil assembly fits over a non-magnetic tube which contains fixed and moving ferrous armatures. When a current is applied to the coil the flux magnetizes the armatures which are attracted together. The level of attraction is dependent on the design and the level of the current.

There are two main types of electromagnetic actuator (Figure 2), the pull version and the push version. Both rely on attraction to work, the only difference being the layout of the fixed and moving armatures and the way they are connected to the part being actuated. (Reversing the polarity of the voltage in a simple coil will not change function of the actuator.)

With clever design of the tube and armature the force exerted by the coil can be made to be roportional to the current applied. This allows us to produce proportional directional, pressure and flow control valves.

The shape of the pole ends between the fixed and moving armatures along with the design of the non-magnetic in-fill allows the tube designer to change the force displacement characteristic produced by the combination of the coil and the tube. You can therefore have tubes designed to give proportional movement and those to give proportional force over a small movement. The latter of these designs is typically used for pressure control and the former for flow regulation or directional control.

The design of the hydraulic section of the valve enables the oil to pass from port to port due to the movement or force created by the effect of the electromagnetic flux on the two armatures and subsequently on the poppet or spool.

N

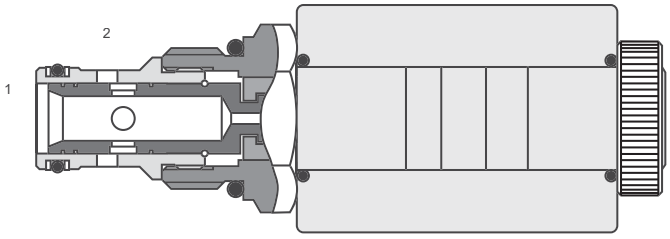

Figure 3. S510A Simple two position, two port directional control valve (using pull type solenoid)

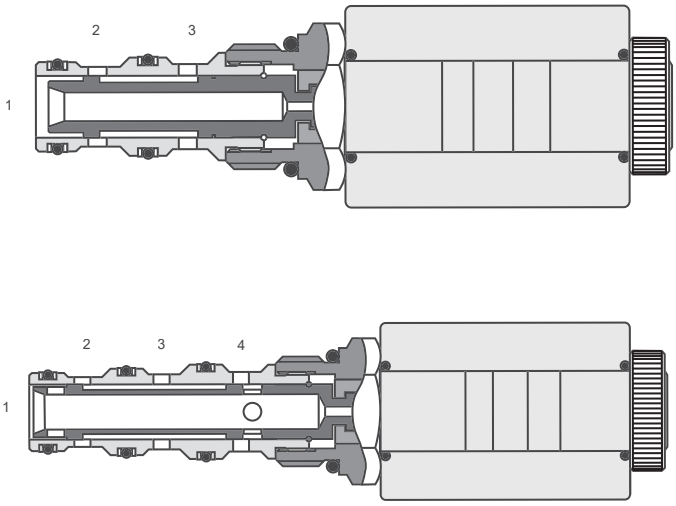

Figure 4. S525 & S542 still two position, but now three and four port directional control valves (again using pull type solenoid)

The simplest device is a two positioned, two ported valve made up of a spool and sleeve connected to the armature (Figure 3). The armature pulls or pushes the spool within the sleeve either closing or opening a ring of holes in the sleeve that connects one port to the other.

More ports and a more complicated sleeve/spool assembly can create two position three or four ported valves (Figure 4).

By using two coils on a common tube a three positioned valve with four ports can be achieved. There are various designs but common layouts use either one fixed and two moving armatures or two fixed and one moving armature, the example below uses the former. (Figure 5)

The poppet valve (Figure 6) consists of a poppet that is forced onto a seat against a spring in the case of a normally open valve and pulled away from a seat against a spring for a normally closed valve. (Poppet valves give minimal internal leakage compared to spool valves.) The balance between the working pressure, the spring force and the magnetic force is very important and in order for the poppet valve to pass higher flows it is necessary to operate the valve in two stages. The armature will force a pilot poppet onto a seat contained within a larger poppet so that when the pilot poppet is opened a flow is created across an orifice allowing the pressure difference to act to open the bigger poppet. By doing this you can control very large flows using a small pilot solenoid valve.

When specifying a solenoid valve there are several important characteristics of the assembly the machine designer must take into account.

All coils will come with a rating that indicates the voltageß and the power consumption in Watts. Establishing the requirement for a machine seems straightforward but there are pitfalls that must be avoided.

Most coils are advertised as continuously rated provided they are working within set parameters. When a solenoid is energized it will generate heat, the amount of heat experienced by the coil will depend on the power being

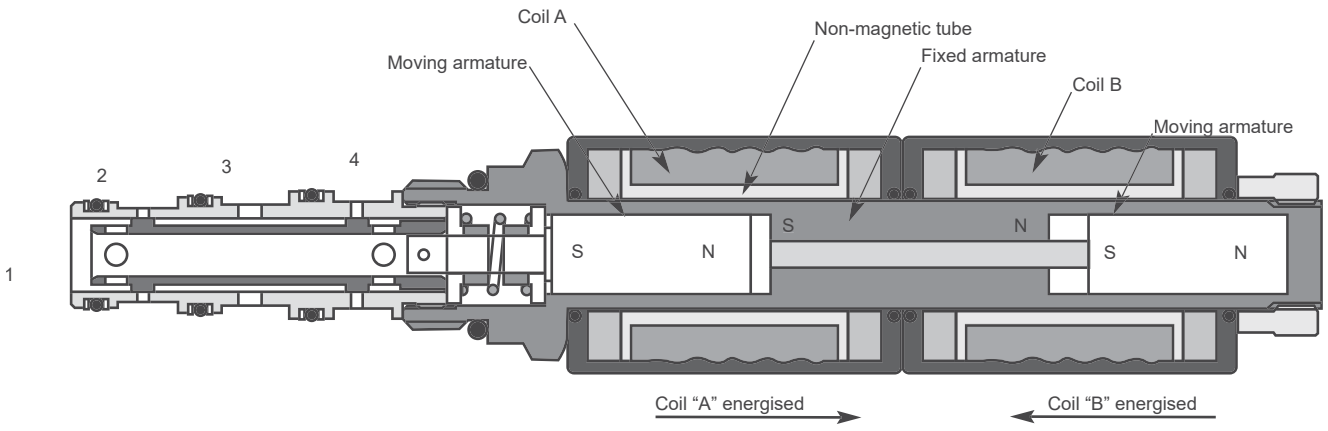

FIgure 5. S570 Two solenoids on a common tube to give a three position four port directional control valves

N

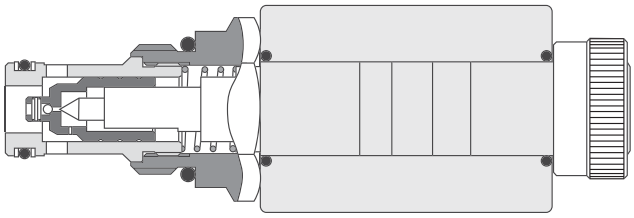

Figure 6. S501 A typical pilot operated poppet valve - good flow characteristics and minimal internal leakage (using push type solenoid)

applied, the design of the coil and any cooling effects. The temperature of the valve is important because it affects the performance of the encapsulating material. The materials used will have a class given to them.

For example Class 'H' guarantees the material up to 180° C while class 'F' up to 155° C. If the ambient temperature plus this increase in coil temperature rises above the rating of the insulation and encapsulation material then failure will occur. Most catalogs will indicate an ambient temperature of between -20° C and +40° C.

Change in temperature also affects the resistance of the coil and hence the force it will exert, but more of that later.

The second most important consideration is the application and the exposure of the coil to the elements. Coils and tube assemblies are designed to withstand different levels of water ingress. This is called the 'IP' rating. The connectors used will carry their own IP rating such as DIN 43650 at IP65, most Deutsch connectors are IP67. The level of water ingress protection increases with the higher number. Details can be found in BS EN 60529. Some manufacturers also seal the coil/tube joint with an "O" ring to prevent corrosion and possible weakening of the tube.

On machinery where the valve is mounted a long way from the power source voltage loss along the wires has to be accounted for. The coil is rated to give a performance to a valve specified with a tolerance on the voltage. Typically +/- 10% of the nominal voltage. If the voltage at the coil drops then full performance from the valve will not be achieved. Proportional valves in particular require the availability of a constant current to operate effectively and predictably. And it should be remembered that as the coil warms up the resistance will change affecting the voltage and so the reaction of the valve to change in input signal. Utilizing Pulse Width Modulation (PWM) will minimize these adverse effects. Hysterisis within the valve can also be reduced by applying PWM to the signal. Feedback loops within the electronic control can also make the valve more accurate.

Most hydraulic companies will specify a performance figure for their valves that is available at a percentage of the maximum power usage. This is to allow good operation when the coil heats up and there is a resultant loss of magnetic force, therefore when testing a machine it is important to verify the valve function at stabilized temperature/most extreme service conditions.

A coil is an inductor – it stores energy and resists change, so when switched off it will generate a brief high voltage signal which potentially can damage other electronics devices on the vehicle or system.

To protect against these, coils or connectors can be fitted with diodes to permit the energy to dissipate safely.

As yet there are not generally recognized standards as to how response times should be measured, some manufacturers will quote figures from the time when the power is switched to the point where the armature reaches the end of its stroke, others from the time the power is switched to the point where the hydraulic fluid reacts. When looking at different manufacturer's products it is important to compare like for like.

Note: Response times are usually different for switching the power on or off.

With mechanical valves the performance is often based on the pressure drop across the valve at a set flow. With electrically operated valves it is more likely that the balance between the solenoid force, the internal spring force and the flow forces will dictate the working envelope of the valve.

Force on valve components due to pressure is usually straightforward but forces are also generated by the fluid passing over the surface of the valves components, these flow forces can either act with the coil force to help the valve to stay in its operated



condition or act against the coil force. There have been occasions where they have caused a valve to switch back to its original position as soon as the flow force overcomes the magnetic force causing an actuator to change direction in the middle of its stroke. Performance data often indicates that a valve will allow more flow in one direction than the other. This can be directly attributed to the flow forces within the valve.

In the case of most solenoid valves the pressure limitation will be determined by the tube design and the factor of safety



A simple proportional 2 port restrictive style pressure compensated flow control valve. Type PFR24A

employed by the manufacturer. But in some cases over pressurization of the valve may cause the valve to open, as the force created overcomes the magnetic force exerted by the coil.

A typical example of good hydraulic design using electrical operation is shown in Figure 7. This valve is used on a pilot line to provide a pressure compensated flow at all times with the ability to switch from one pressure to another by energizing the solenoid. The armature compresses a spring within the valve that increases the force on the poppet increasing the setting of the valve.

Figure 8 shows a bi-directional poppet valve for flows up to 90 liters/min To give bi-direction to the poppet and so the flow two very small shuttle valves are situated in the poppet. These direct the flow through the opening orifice from the high pressure side of the valve. When the valve is de-energized the poppet is balanced and offset closed by light spring.

Figure 9 shows a proportional pressure reducing valve, where with no current applied, the regulated port is connected to tank. As the current increases the pressure in the regulated port will rise to balance the increasing solenoid force.

Pressure in the regulated port acts on the spool tending to close it against the force of the solenoid. As pressure in the regulated port increases (with a constant current applied to the solenoid) the spool will shift, restricting the inlet, equilibrium is then achieved and a reduced constant outlet pressure held. Varying the current will alter the force applied to the spool and hence the pressure in the regulated line.

Solenoid operated valves are used on most machines and effectively control the required functions. Proportional controls are becoming more common as the cost of the technology is reducing and the advantages of digital control are realized. The variety of solenoid operated valves is wide because of the ingenuity of the design engineers to solve complex and often conflicting demands.

A solenoid valve can give electrical control to almost any hydraulic function. This reduces pipe work, removes most hydraulic lines from the vicinity of the operator, adds flexibility and functionality and ultimately adds to the competitiveness of the machine in which they are used.



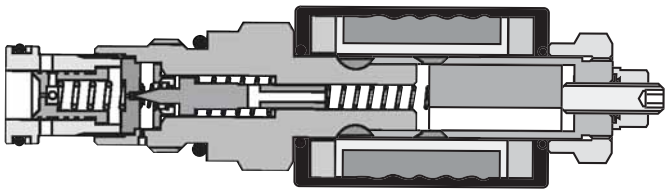

Figure 7. A pressure compensated flow control with pressure switching

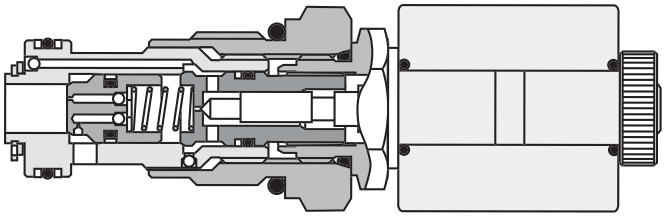

Figure 8. S717 High flow bi-directional poppet valve

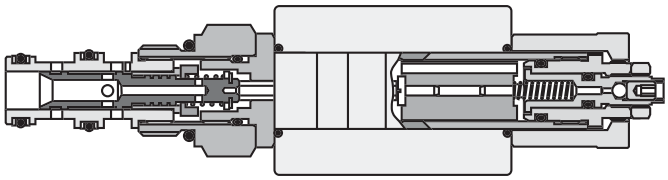

Figure 9. PPD22A Proportional pressure reducing valve

Keeping things in proportion

Article of interest

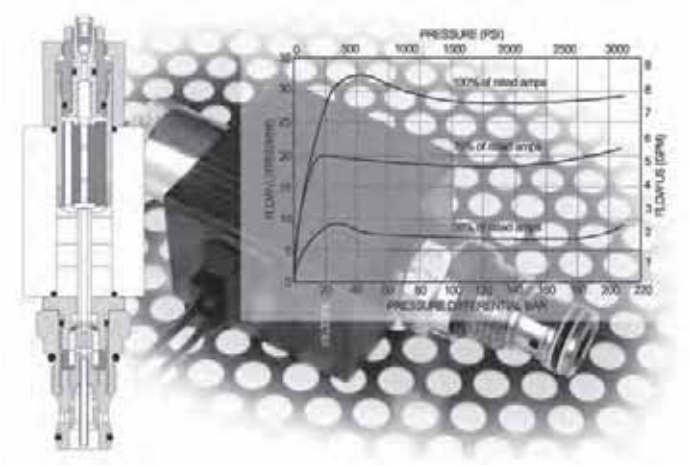

Electronic control of solenoid operated valves is becoming commonplace in many different types of machines. Traditionally proportional valves have been applied to industrial applications such as machine tools but increasingly mobile machine manufacturers are accepting the improvement in machine performance despite a reticence to adopt black box type technology provided by electronic control cards.

To the layman proportional control can be a little daunting but with the help of electrical and electronic engineers the technology is not so frightening.

For the successful introduction of proportional control technology a new language has to be understood. It is not necessary to understand the underlying electronics but the function, application and benefits of each term will make for a smooth application.

Proportional control can be applied to pressure, flow or directional control valves. By altering the current applied to the coil you can change the force exerted by the electro magnet. This can be done in a linear way so that the change in current produces a proportional change in pressure, flow or position of any valve. Innovative valve design can give smooth linear control with low hysteresis while using a simple standard coil.

Electro-magnetic force is proportional to the current flowing through the windings of copper within the coil so if a constant current is not maintained the performance of the valve will alter. This means that if you are running from a battery and the voltage falls due to loss of battery charge then the current will also fall causing the solenoid force to decrease. If the running or ambient temperature of the coil rises then the resistance will increase thus causing the current to fall subsequently affecting the performance of the valve. It is necessary to try to maintain a constant current irrespective of changes in voltage or resistance. This is why electronic control circuits are important.

The electronic card or controller introduces the ability, not only to control the current but to provide other advantages. The input signal can be from a Joystick or potentiometer (manually controlled), or from a feed back from elsewhere in the system.

This signal can be controlled to introduce such things as Ramp, where there is a controllable linear increase in the signal over a period of time regardless of how violently the operator moves the joystick, this allows smooth operation of the machine without rapid changes in force or speed and Dither, rapid small current oscillation that keeps a spool moving to prevent it sticking due to silt or small contaminant.

As we have said, the force produced by a given coil is determined by the current applied, the current can be quite high so an amplifier card is used to increase a low input signal (governed by the joystick or potentiometer) to that required to operate a hydraulic valve, the amount of increase is called Gain or I-Max and is simply defined as the output signal/input signal. One could, of course, drive a hydraulic valve directly from the joystick but this would require the potentiometers on the joystick to dissipate a lot of heat and as the current available in a machine varied the performance of the hydraulics would vary. An amp card can pass the currents required but it will, again, produce a fair amount of heat. The solution to this is a technique called Pulse Width Modulation (PWM). PWM effectively produces a variable output signal by switching the full current on and off very quickly, typically at 100 to 400Hz. If the current is on for 75% of the time the average current output will be 75% of the full current available, if on for 50% the out put will be 50% and so on. This reduces the heat generated and power consumed. At low frequencies it will naturally produce dither but the level of dither produced will depend on the output current required, the maximum will be at 50% dropping off to zero at 0 and 100% output. These figures may not suit a particular valve so higher frequency PWM and deliberately generated dither may be preferable but, typically the higher the frequency the higher the cost of the card. The input to the amplifier card can be analogue (from joystick or potentiometer) or digital (from a PLC Controller). Using a PLC, functions can be programmed to give automatic sequential control to a machine or system.

There are many different types of Proportional valve from the very sophisticated with on-board electronics complete with positional feed back to the more simple device that work in open loop systems, probably relying on the operator as feed back to the controller through a Joystick. These valves can be inexpensive but at the same time give infinite control to the operator. The electronics can control the input to prevent the machine from going out of control under rapid change of input signal.

Hysteresis can be improved by introducing a low frequency PWM signal producing dither within the moving components of the valve. If the loop is closed electronically then even a crude proportional valve can give accurate performance.

Legislation now dictates that high pressure hydraulic lines are not acceptable in the cab environment so electronic proportional valves enable the machine operator to retain the feel afforded by direct, lever operated valves and to work in a safer environment.

A typical example is a pavement sweeper. As the operator moves around he has to make constant adjustments to both the height and speed of the brushes. To do this he employs proportional pressure reducing valves to raise the brush and proportional flow controls to govern its speed.

A proportional pressure-reducing valve used for this application is shown in Figure 1. The PPD2 2A is a self contained cartridge that can be installed in a manifold

along side of other control elements. The valve has a maximum rated flow of 20 liters per minute and controls the output pressure relative to the current supplied to the coil. The hysteresis without PWM is around 16% maximum but comes down to 5% with PWM at around 200Hz. The 'dead band' is around 16% of the rated current. This means that the control begins after 16% of the rated current is applied. Adjusting the minimum current, L/min, on the electronic card can accommodate this. The operator will then not have to move the joystick far before he gets a reaction from the valve.

The valve has a maximum inlet pressure rating of 210 bar and an outlet pressure from 0 to 28 bar.

In this application the cylinders controlling the height of the brushes are single acting. The weight of the brush will drive it into the ground so the proportional valve is used to raise the brush to a position most suitable for the ground conditions, during sweeping. The control in the cab is a simple potentiometer.

Figure 2 shows a proportional flow regulator that is used to control the speed of the brushes. This valve has a flow range of 0-28 L/min with a compensation accuracy of around 10% on the set flow with change in regulated pressure from 20-210 bar. The valve is capable of compensating in both directions. The response time is around 300ms to change from one flow to another and the hysteresis with a PWM of around 200Hz is about 4%.The internal leakage prior to the valve opening is 200cc/min with 210 bar difference between the two ports. While this is not the most sophisticated proportional valve design it is very competitively priced and gives accuracy and repeatability that is well within the requirements of most mobile machine applications.

On the same machine this valve is used to control the fan speed providing the suction that draws up the waste into the hopper. It is important that the valve gives reliable operation because excessive speed on this kind of fan can be dangerous due to the inertia generated by the heavy steel fan.

In some cases on other applications any excess flow needs to be diverted to tank to limit heat generation. A by-pass style pressure compensated flow regulator is required. This cartridge can be used in conjunction with a standard compensator and a pilot relief valve to give the complete circuit controlling the regulated flow, bypassing the excess flow to tank at working pressure and supplying a system relief limiting the pressure in the regulated line. Figure 3 shows a typical manifold.

Another area where a simple proportional valve can provide benefits far beyond expectation is by using it as the control element in a much larger cartridge valve.

A simple proportional pilot relief cartridge can be used in conjunction with normally open or normally closed logic

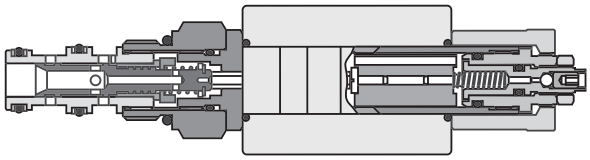

Figure 1. PPD22A Pressure reducing cartridge

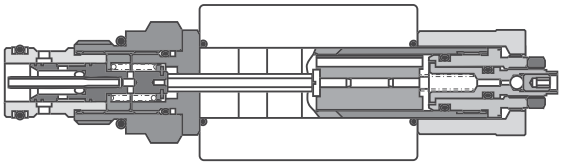

Figure 2. PFR24A Flow control

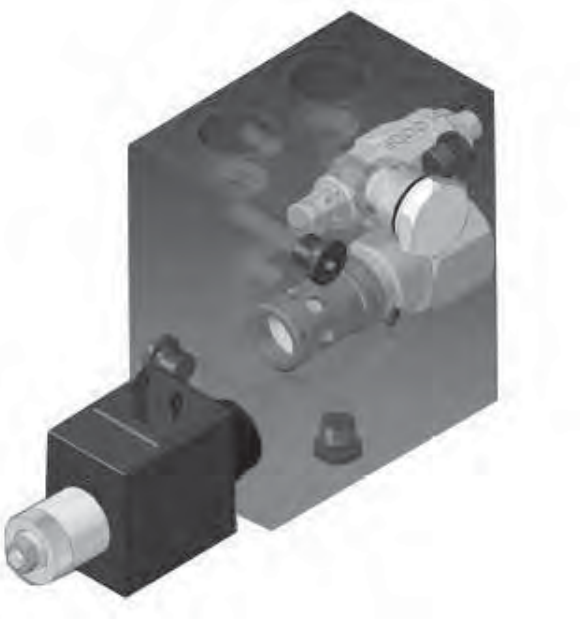

Figure 3. Proportional pressure compensated flow control HIC.

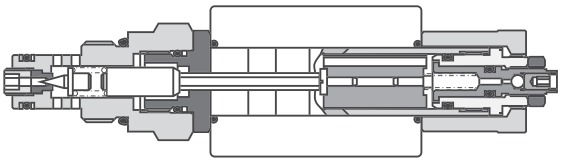

Figure 4. PDR2 pressure relief cartridge

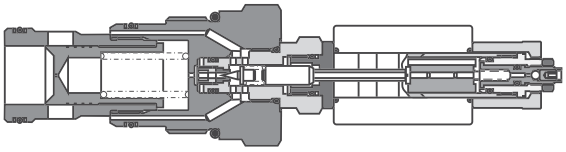

Figure 5. 400 L/min proportional pressure relief valve

N

Keeping things in proportion

Article of interest

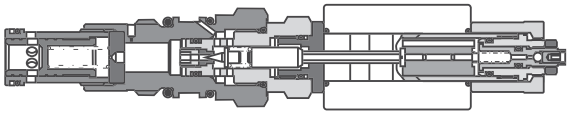

Figure 6. 100 L/min proportional pressure reducing valve

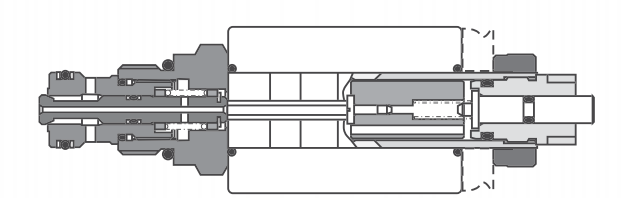

Figure 7. Proportional flow control poppet cartridge

elements to give high flow relief function or pressure reducing functions. Fig 4 shows a typical proportional relief cartridge which has several pressure ranges between 7 bar and 350 bar. The maximum rated flow is 2 L/min; this is adequate for use as a pilot control valve. Hysteresis is around 7% with PWM at 200Hz with a dead band of 7%.

Figure 5 shows the cartridge fitted into the back of a normally closed logic element. The valve now becomes a 400ltr/min pilot operated relief valve proportionally controlled. This valve has been used on large earth moving equipment giving different pressure control for the different functions. Using a PLC this is done automatically. On operating each function a signal is sent to the relief valve to alter the pressure setting.

Figure 6 shows the cartridge fitted into a normally open logic element. Some cooling fan applications demand pressure control to limit the speed as opposed to flow controls. The pilot cartridge can give suitable control to the logic element with flows in excess of 100 L/min. Within the machine a temperature sensor will signal the fan to start running governing the speed depending on the temperature. This signal is received by the pilot relief cartridge automatically adjusting the current feed to adjust the pressure setting of a normally open logic element. The fan speed is proportional to the pressure. The valve will control this pressure irrespective of potential changes in inlet pressure.

Figure 7 shows a proportional valve that would not be considered as the most accurate and sophisticated valve in hydraulics but is very competitive and ideal for the applications it was designed for. The valve shown provides load holding by virtue of its poppet design and a proportional speed control. The valve has been designed so that under heavy load conditions the valve reduces the speed slightly giving a form of compensation. The dead band is around 45% of the maximum rated current due to the poppet design but with electronic adjustment of minimum current the operator never notices this quirk. The feed back on this system is the operator who will drive the machine at a speed that he feels comfortable.

Proportional valve technology need not be expensive and very sophisticated. Often the valves are over designed for the real machine requirement. A hysteresis of 1% compared with 5% will increase the cost of the valve significantly but the operator of most mobile equipment would not notice. A response time of 10ms against 300ms would not be a problem given the excellent response of human reflexes. A good valve is one that is suitable for the application at the correct price. Electronics can improve the performance of any valve making the performance indistinguishable to that of more sophisticated devices.

Even simple electronics can give the operator enough confidence to enjoy the benefits of proportional valve technology. The valves and electronics can be cost effective and give the operator the benefit of smooth reliable control and added security as he goes about his working life.

N

Figure 1: 1CE Standard overcenter valve

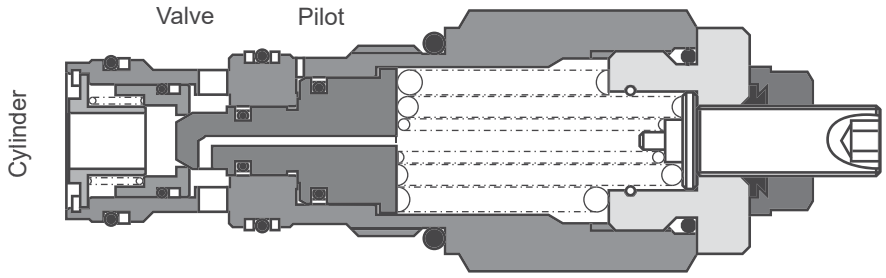

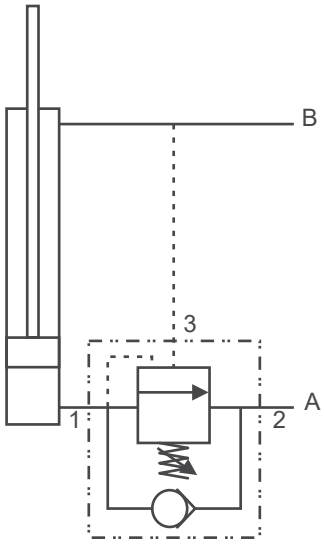

Figure 2

There are two basic designs, each with several variants. The direct acting design, is ideal for flows up to 200 L/min whereas the differential area design, is suitable for flows up to 300 L/min.

There are now many types of overcenter or motion control valves available to the designer of hydraulically operated machines, each one has its own place and specific benefits to the user. The function of these valves can be divided into three basic groups.

1. Load Holding; where the overcenter valve prevents the movement of a load when the directional valve is in the neutral position. Permitting the use of open center directional valves and negating leakage past the spool of closed center directional valves.
2. Load Control; where the overcenter valve prevents the actuator running ahead of the pump due to the load induced energy thereby eliminating cavitation in the actuator and loss of control.
3. Load Safety. In the case of hose failure an overcenter valve mounted onto or into an actuator will prevent uncontrolled movement of the load. When a boom is used as a crane then hose failure protection is vital as the loss of load control could cause damage to people or property.

Each of these functions is applicable to linear or rotary motion.

The standard overcenter valve (fig 1) can be described as a pilot assisted relief valve with an integral free flow check. The difference between this design of valve and a pilot check is that the check valve will open fully as soon as the pilot pressure is sufficient to open the valve because the only resistance to opening is the pressure locked in to the cylinder port. With an overcenter valve the pilot pressure has to overcome the force of the spring which is reduced by load pressure. This ensures a gradual opening and a metering of the flow as it passes the poppet. Integrated Hydraulics overcenter valves consist of a poppet that seals flow from an actuator, a check element, which permits free flow to the actuator and a pilot section that opens the poppet allowing flow from the actuator at a controlled rate. There are two basic designs, each with several variants. The direct acting design, whereby the pressure in the actuator acts on the full area of the nose of the poppet, is ideal for flows up to 200 L/min whereas the differential area design, whereby the pressure acts on an annular area, is suitable for flows up to 300 L/min. Being of poppet type both designs exhibit excellent leakage characteristics with maximum leakage of up to 0.5 ml/min for valves up to 200 L/min capacity and up to 4ml/min for valves with 300 L/min capacity.

The cartridge has three ports, a cylinder port (1), a valve port (2) and a pilot port (3). If pressure, above the setting of the valve is applied to the cylinder port it will open as a relief. When applied to the valve port pressure will open a low pressure check allowing free flow into the cylinder port. Pressure applied to the pilot port acts over a larger area on the poppet than the area referenced to the cylinder port, so the valve will open at a low pressure.

For most applications the relief setting should be approximately 1.3 times higher than the maximum load induced pressure. This ensures that with the maximum load on the actuator the valve will remain closed until pilot pressure is applied. The pilot pressure required to open the valve will depend on the pilot ratio that is the ratio between the relief area and the pilot area. The pilot pressure can be calculated:

$$\text{Pilot pressure} = \frac{\text{Valve Setting - Load Pressure}}{\text{Pilot Ratio}}$$

A typical application would entail mounting the overcenter valve in or on the end cap of a cylinder (fig 2). The cylinder port of the valve being connected to the full bore area of the cylinder, the valve port to the directional control line A and the pilot connected to the annulus inlet, line B and so to the directional control line B. As soon as the pressure rises in the inlet port of the annulus (line B) to retract the rod to a point where it reaches the required pilot pressure the actuator will begin moving at the flow at which the pressure setting was made. If the load causes the flow to

increase then the inlet will be starved of oil and the pressure will begin to drop at this port. The reducing pressure will be sensed at the pilot allowing the spring to begin to close the valve preventing load run-away. In this way the valve will continually meter, controlling the load throughout its movement. When the pressure needed to move the load is higher than the pilot pressure needed to fully open the valve the only restriction produced is the pressure drop due to flow in the fully open condition.

With the standard overcenter the spring chamber is vented through the poppet to the valve port which creates a problem if there are varying or high back pressures. Pressure in the valve port increases the effective setting of the valve by a factor equivalent to the pilot ratio plus one. This means that if there is a standing back pressure of 50 bar with a pilot ratio of 5:1 the effective relief setting would be increased by 300 bar. This creates problems if the application demands a closed center directional valve and the utilization of service line reliefs. The relief valves will operate to limit inlet pressure but will not act if there is an external load which needs to be limited. The overcenter will not allow oil past the seat due to the back pressure created by the service line relief valves. To overcome this problem the part balanced 1CER series was created (fig 3).

Any back pressure therefore, does not affect the setting of the valve or the amount of pilot pressure needed.

The 1CER series overcenter valve performs in the same way as the standard valve under most conditions. But the relief section of the valve is not affected by back pressure.

The poppet is designed to balance back pressure over two areas on the poppet. The first is a annular area between the seat (dia a) and the center seal (dia b) on the poppet which acts to open the valve and the second at the spring end of the spool (dia c) acting to close the valve. These areas are the same, the poppet is therefore balanced and so pressure in the valve line will not affect the relief performance of the valve. It must be noted that the pilot pressure required to open the valve is still affected on a one to one ratio by any back pressure.

The advantage of this design is the ability to use the valve on closed center directional valve systems allowing service line relief valves to operate as normal. Most other valves of this type on the market have an atmospheric vent which limits their use in corrosive atmospheres and are prone to leakage.

The 1CER valve does have some draw backs in certain applications. Because the pilot pressure is affected by back pressure the valve can not be used in regenerative circuits on the annular port of the cylinder. Also if used with a meter out proportional system the constantly varying backpressures can cause both the part balanced and the standard valve to go unstable. For this is the reason the fully balanced version, 1CEB series (fig 4) is available. In this case the spring chamber is vented to atmosphere or to a separate drain port.

Any back pressure therefore does not affect the setting of the valve or the amount of pilot pressure needed.

For the standard, Part Balanced and Balanced valves there are various pilot ratios available to the system designer, which is best for his circuit? A general rule is that high pilot ratios are suitable for constant, stable loads and low pilot ratios for unstable and varying loads. The pilot ratio does not necessarily affect the working pressure by much given that the normal working pressure of a system is often much higher than the pilot pressure required to fully open the valve. If this is the case then the piloted open pressure drop will determine the systems efficiency.

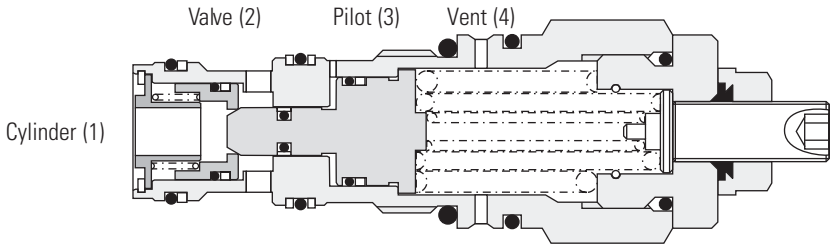

1CEB Fully Balanced Overcentrevalve

Figure 3

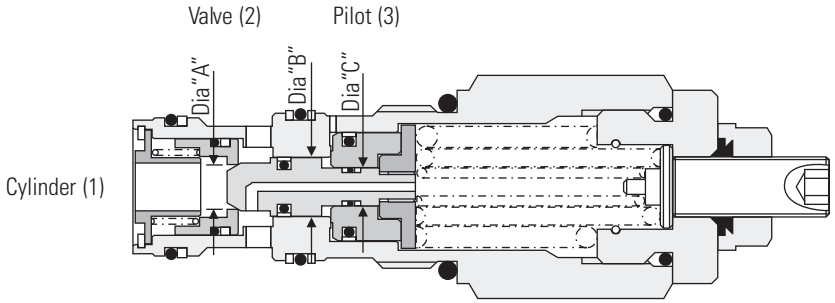

1CER Part Balanced Overcentrevalve

Figure 4

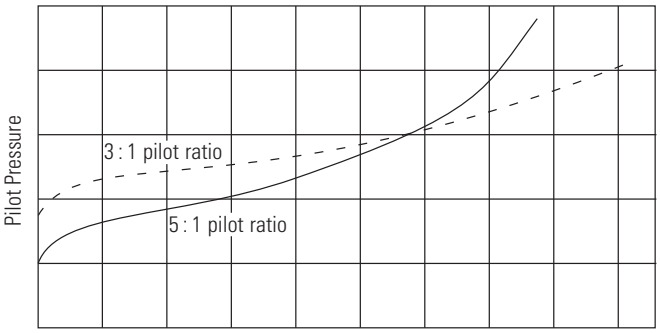

The Effect of Pilot Ration on Flow

Graph 1

Graph 1 shows the pressure drop curves of two valves with different pilot ratios. The higher pilot ratio valve is more restrictive than the low pilot ratio valve. This shows that above a certain pressure the lower pilot ratio valve is more efficient than the higher pilot ratio valve. It is important that the total performance is taken into account before specifying an overcenter valve.

The two stage overcenter valve, 1CEL (Fig 5) has been developed to overcome a problem which has been a continual nuisance to designers of machines incorporating long unstable booms. Instability problems affect many machines, most noticeably those with high capacity cylinders particularly in conjunction with slender booms that are subject varying frictional forces. The best example is the Telescopic Handler that usually has a long cylinder to extend or retract its boom. At the end of its stroke the pressure of the oil within a cylinder rises to the setting of the main relief valve for that part of the system and by its nature, the motion control valve re-seat locks in that pressure (irrespective of any load induced pressure). When the operator lowers the load, this stored energy gives the valve the message that a heavy load is on the cylinder; therefore it takes less pilot pressure to open. As a result, the valve opens very quickly and allows the stored energy to dissipate causing a momentary runaway condition, this causes a rapid acceleration of the load that is then checked by the motion control valve and brought under control. The consequence of this is an initial instability as a boom is retracted; the number of jerks will depend on the stiffness of the system at the time of lowering. This instability can sometimes continue through the whole of the cylinder's stroke, its magnitude, in extreme cases, can cause severe operator insecurity or even the loss of a load.

The 1CEL valve uses two springs to control the poppet, only the outer spring being effected by the pilot piston, leaving the inner to generate a counterbalance pressure. The two-stage valve has overcome many instability problems by preventing the total decay of the stored energy in the cylinder and stopping the valve over reacting. It allows the pressure to fall to the counterbalance setting, which can be adjusted dependant upon the severity of the application. This back pressure can also help to stiffen the boom during its movement further through its stroke, for example when wear pads on the box sections of a telescopic boom create changing frictional forces. This works well but with some systems, the backpressure created by this valve causes problems due to the reduction in available force. On certain machines, when for instance a crowd cylinder is bottomed, the oil from a slave cylinder has to be forced across a relief valve; the boom cylinder creates an induced pressure by virtue of its downward force. It is possible that an unloaded boom will not lower due to the counterbalance pressure. Also in the fully piloted open position the valve still generates a backpressure heating the oil and creating inefficiency.

To overcome these problems another variant is available in which the counterbalance pressure is reduced as the pilot pressure increases. This design has a second pilot ratio, which acts to reduce the backpressure applied by the center spring. Indeed the valve can be piloted fully open, eliminating the counterbalance pressure altogether so improving the efficiency of the system. With a primary pilot ratio of 4:1 and a secondary ratio of 0.5:1 the initial unloading of the stored pressure happens at a low pilot pressure

It is important that the total performance is taken into account before specifying an overcenter valve.

followed by a more gentle reduction as the pilot pressure increases. The overall setting of the valve is a combination of the outer and the inner spring forces divided by the seat area.

The practical application of either of these valves involves the establishing a range of acceptable settings. For example, the requirement is for the valve to be set at 200 bar (3000psi) with a counterbalance pressure between 35 and 70 bar (500-1000psi) - there are two springs within the valve, the outer one is fixed and the inner adjustable. For this application the outer spring would be set to give 165 bar (2400psi) and the inner adjustable between 35 and 70 bar (500-1000psi). This would give the valve an adjustable range of 165-235 bar (2400-3400psi). Given a pilot ratio of 6:1 or 4:1 depending on the type this extra pressure setting would have little effect on the pilot pressure needed to open the valve during normal operation.

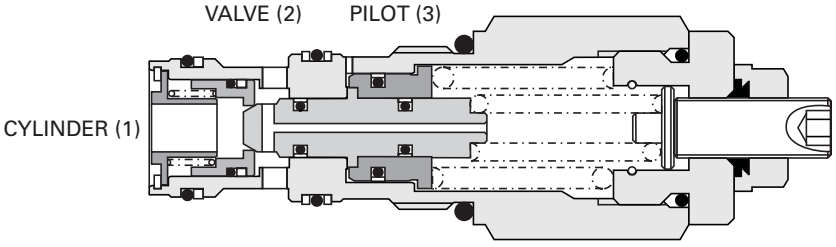

1CEL COUNTERBALANCED OVERCENTRE VALVE

Figure 5

N

Overcenter valves

Article of interest

Graph 2 shows a typical recorded instability picking up machine frequencies and getting worse and Graph 3 shows the counterbalanced overcenter valves preventing the problem getting worse, dampening out the initial instability and the counterbalance pressure falling as the pilot pressure increases.

The zero differential range of load control valves 1CPB (fig 6) have been designed with 'BoomLoc' hose rupture valve applications in mind. Typically the valve is piloted open from the hydraulic remote control operating the main directional spool valve. By setting the overcenter to open just after the main valve it will control the flow rate at low speed but as the overcenter opens more rapidly than the directional valve the directional valve will control the flow rate at higher speeds. It is a pilot operated metered poppet valve. The poppet seals against a tapered seat, as the pilot pressure increases the poppet will move off the seat. Flow is dependant upon the axial movement of the poppet which in turn is dependant upon the force exerted by pilot pressure balanced by that exerted by the spring. The poppet is hydraulically balanced so this valve is unaffected by valve line AND cylinder pressure but it will not provide any relief function. If over pressure, shock or thermal relief are required a second relief element is required.

The successful application of motion control valves, particularly in areas that are demanding involves the anticipation and resolution of numerous factors only some of which can be discussed in this article. Motion control valves are adjustable, are available in several pressure ranges with many pilot ratio options. Most of the valves fit in a common cavity (the exception being the fully balanced, 1CEB and zero differential, 1CPB versions when required with an external rather than an atmospheric vent) and are available

in sizes from 30 to 300 L/min. The flexibility of cartridge valve technology can therefore be easily applied to bring stability. The standard range of valves described here can be used to solve the vast majority of motion control problems and we are constantly developing new valves that will further improve stability and load control.

The standard range of valves described here can be used to solve the vast majority of motion control problems.

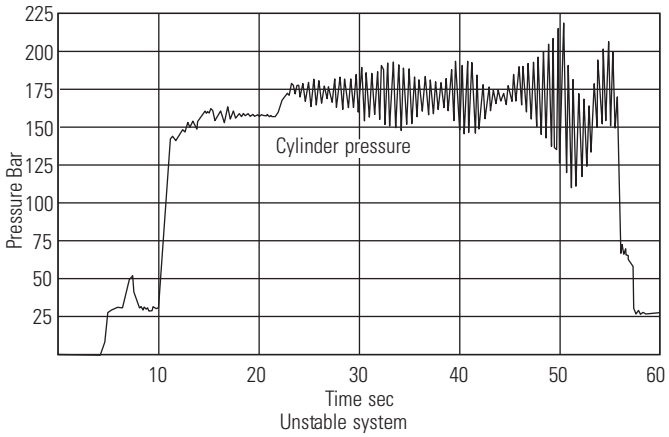

Graph 2

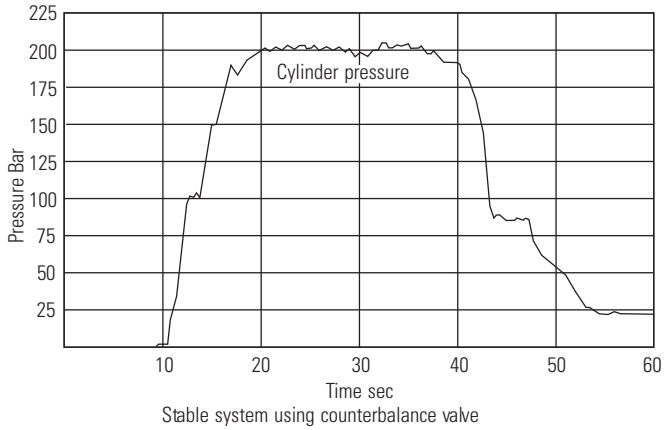

Graph3

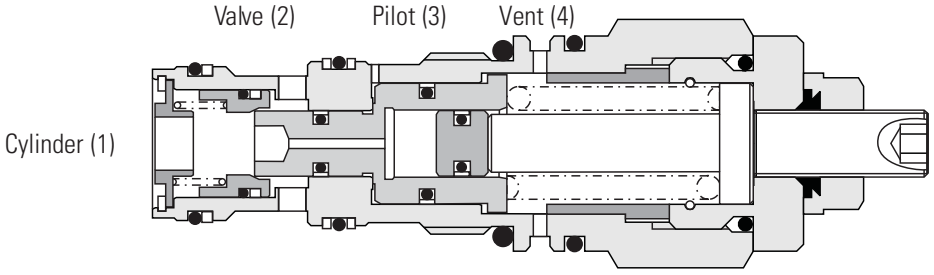

1CPB(D) Zero Differential Overcentre Valve

Figure 6

N

BoomLoc valves (designed & tested to ISO8643)

Article of interest

The requirement for hose rupture protection on mobile plant is enshrined in law in many territories and likely to become so in many others. ISO8643 requires that, in the event of a hose failure while lowering a boom it should not accelerate to more than twice its original speed with the control lever held in the same position. Additionally the valves introduced to achieve this should not unduly effect the operation of the machine to which they are fitted. (The current 100% maximum increase may be reduced to 75% in the future). If a hose were to fail while a boom is lifting or static the load should be held in position. We have developed a range of hose rupture valves, designated "BoomLoc", that are designed to meet the stipulations of ISO8643 and can be applied to numerous different machines.

BoomLoc valves are reliable because they make use of standard off the shelf components that have been field proven, in most cases for many years. All our cartridge valves are manufactured to a high standard with moving parts hardened and precision finished to give a long trouble free service life. Their performance is predictable so set up and development times can be dramatically reduced even when applied to a new system. In service the valves perform as intended with cartridges having been tested to over 1,000,000 cycles in our development department and having been used for many years in the field. When operating under normal circumstances, i.e. with hoses intact, BoomLoc valves offer high efficiency, as the hydraulic fluid is free to pass through the valve to the cylinder with negligible pressure loss. And by selecting the most appropriate package to match the performance of any given directional valve pressure losses in the return direction can be kept to an absolute minimum.

BoomLoc valves can provide a very compact solution. The valve should be mounted on the cylinder, either directly onto its port or connected to the port by rigid tube, so space can be quite restricted. Using Integrated Hydraulics Boomloc valves unique design potential to the full, transfer plates, commonly employed to permit the fitting of more bulky valves can often be eliminated. The block can be designed to suit the customer's installation and can even be done away with if the cartridge valves are incorporated into cylinder end caps thus dramatically reducing the space requirement and the cost of the overall package. Furthermore additional features can be incorporated in the block making the machine more versatile.

To achieve the desired protection without adversely effecting the operation of the machine it requires the accurate balancing of the hose rupture valve and the main directional valve. In order to work effectively the opening of the hose rupture valve should, ideally, lag behind that of the directional valve and the difference in pressure drop should remain constant throughout the operating flow range. To achieve this the hose rupture valve should be matched to the system in which it is employed, a set up that works on one type of machine would not necessarily work on another.

Due to the unique seat and poppet arrangement in the 1CPB series cartridges used in their "BoomLoc" range and the flexibility of the cartridge valve design "BoomLoc" valves can be tailored to suit most directional valves and so provide exceptionally fine control. A level of control that is particularly desired for levelling and grading, which can reduce (if not eliminate) the "washer board" effect frequently found when other valves are used. This fine control also has the benefits of enabling the operator to accurately position loads during craning operations.

"BloomLoc" valves are designed to meet the stipulations of ISO8643 and can be applied to numerous different machines.

Reduced installation costs can be realised using these "BoomLoc" valves as they use a simple direct SAE mounting to cylinder. In order to minimise stock requirements we have, where possible designed the cylinder port face to be suitable for both SAE3000 and 6000 flanges. A pilot bleed port is available on most valves simplifying installation further. Service costs are also minimal, in the unlikely event of a BoomLoc valve being damaged, repair usually just involves the replacement of one or two self-contained cartridges. What is more there is rarely any need to remove the block from the cylinder when changing the cartridges - reducing the risk of the ingress of contaminants and the down time of the machine. Spares inventory is frequently reduced as the same two, standard, off-the shelf cartridges (albeit set differently) are often used on a wide range of machines.

Operation: Free flow to cylinder

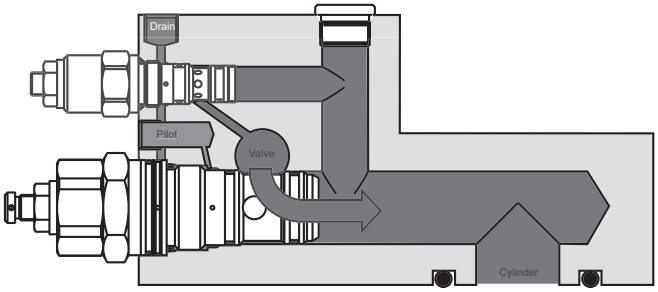

Upon operating the control to raise a boom, pilot pressure from the hydraulic remote control unit operates the appropriate spool in the main directional valve, permitting flow to the cylinder. At the cylinder the flow passes through our Hose Rupture Valve (HRV) check sections with minimal pressure loss and enters the cylinder. (The fluid from the other end of the cylinder flows directly to tank via the main control valve).

N

Load Holding

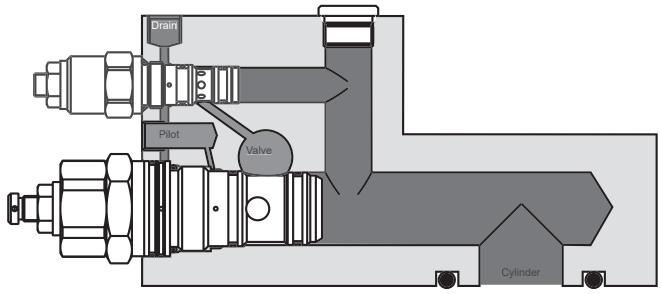

When the control lever is returned to neutral, the check valves in the HRV close and any return flow is blocked, the load is now locked in position.

Relieving

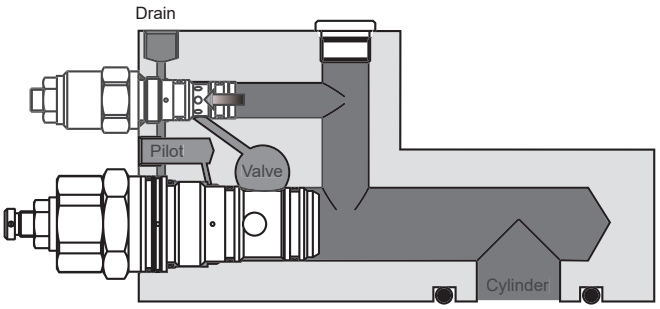

Cavitation and excessive pressure in the boom cylinder, (bottom end circuit), is prevented by an overload relief and make up check, located in the HRV. Flow being returned to tank via the main control valve port relief.

Controlled lowering

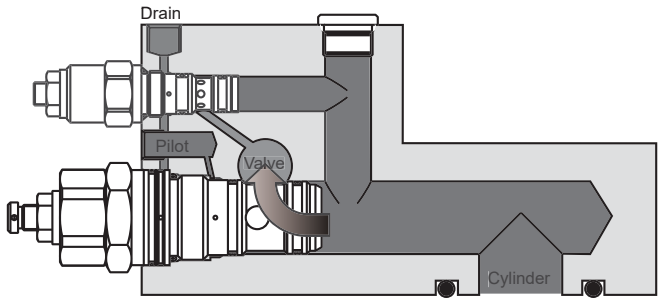

When the control lever is pushed forward to the boom lower position, pilot pressure from the hydraulic remote control unit operates the appropriate section of the main directional valve, opening flow from the cylinder return line to tank. At the same time the pilot pressure opens the main poppet of the HRV, thus allowing oil to flow from the bottom end of the cylinder to the return line. The rate at which the boom descends is dependent on the position of the poppet in the HRV and the spool in the main directional valve, So in the event of a total hose failure the HRV will prevent the boom accelerating above twice its original speed. As the flow rate is now dictated by the pressure drop across only the BoomLoc valve. Releasing the control lever will permit the poppet in the BoomLoc HRV to close stopping the boom from further descent.

BoomLock valves set-up procedures

For reasons of safety it is recommended that ALL adjustments to the Hose Rupture Valve be carried out with the bucket rested on the floor.

Unless otherwise requested the cartridges are preset to 350 bar (relief cartridge) and 10 bar (pilot catridge, part number 1CPB** or 1CPBD**). The pilot valve will normally require adjustment, but the relief setting of 350 bar is generally suitable for most applications and ensures the maximum protection of the cylinders. Check the maximum pressure of the system and adjust the relief valve if required. Prior to all adjustment ensure pilot line has been fully bled. This can be achieved by operating the joystick to either roll in or lower the respective cylinder and opening the bleed port on the Hose Rupture Valve. In cases where no "BLEED" port is provided, disconnect the pilot hose from the Hose Rupture Valve and running it to a suitable container should suffice.

Relief Valve setting: The relief setting of 350 bar has been calculated to meet most systems but can be adjusted to individual requirements. It is advised that the setting be between 10 and 20% higher than the main control valve. To increase setting, screw the adjuster clockwise to increase pressure at a rate of approximately 65 bar per full turn. To decrease setting, screw the adjuster anti-clockwise to decrease pressure at the same rate.

Pilot Cartridge setting: To successfully set the pilot cartridge pressure, two 400 bar and one 50 bar gauges need to be used. On the Hose Rupture Valve, connect one 400 bar gauge to the "E" port where provided (or the cylinder port if no “E” port) and the other 400 bar gauge in the valve inlet line “V”, and connect the 50 bar gauge in the pilot line "P".

The procedure can be related to both the Arm cylinder and the Boom cylinders but for the ease of explanation, the following procedure is for Boom cylinders only.

1 Fully swing out Arm cylinder. Raise Boom to full extension and at the end of its stroke record the pressure in the valve and cylinder gauges.

2 To check setting, slowly move joystick to lower Boom. When the gauge in the valve line starts to fall, it is a signal that the main control valve has started to open, at this point note the setting in the pilot line, typically 8 bar.

3 Continue to slowly operate the joystick and note the reading in the pilot line when the gauge in the cylinder line starts to fall. This indicates the setting of the pilot cartridge (1CPB(D), typically 10 bar.

It is recommended that the Pilot Cartridge should dwell between 1.5 and 2 bar behind the Main Control Valve. If the pilot valve is set too low, pressure at "E" falls before "V" - adjust pilot valve clockwise.

If the difference between 2 and 3 above is greater than 2 bar - adjust the pilot valve anti-clockwise.



Our brave new world of Hydraulics provides technology to industry that is ever improving and more complex. The demand for machines that think for themselves reducing human error have inspired the engineering fraternity to ever greater feats of hydraulic ingenuity.

The simple directional valve has become an electronically controlled mechanism that provides fine control to the movement of machinery. The pump has become more efficient by adding feed back controls in the form of pressure compensation and load sensing, providing stable controlled flow to a pre-determined level to reduce energy losses. Even some actuators have built in transducers to provide position feed back completing the loop.

It is a shame that when using this modern technology the simpler and most important valve in a system can be as crude as a ball on a seat. The humble relief valve takes a back seat to the point where great effort is made not to allow this valve its rightful roll in providing the ultimate system protection. "Don't let it operate because it is noisy" or "we can not guarantee that the pressure control will be consistent". "The valve opens too soon and does not close quickly enough".

From the main system relief to the safety relief there are valves available that are equally advanced in their innovation and technology as the higher profile pumps, directional control valves and actuators. The problem is that many engineers do not understand the reasons for the different designs and their individual applications or how to assess the performance. This article will attempt to throw some light on what is available and where to apply the different designs.

It is true that the simplest relief valve is a ball sitting on a seat with a spring keeping it closed until the pressure over the area of the seat is high enough to allow the valve to open and allow flow to pass. The flow capacity is limited by the size of the seat and the pressure difference across the opening. To get more flow across the valve the ball has to move further back against the spring increasing the force and therefore the required pressure. A basic relief valve curve will look like Graph 1.

Graph 1 is based on a poppet style direct acting relief. The cracking pressure is the point "A" at which the pressure over the area of the seat is the same as the spring force. The initial opening characteristic "B" depends on the cone angle of the poppet, the second section of the curve "C" depends on the relationship between the design of the poppet and its movement which is effected by the rate of the spring, generally the higher the spring rate the steeper the gradient. As more flow passes through the valve the relief curve will meet the orifice curve "D".

The performance of a direct acting relief valve can be altered by innovative poppet design.

By using the flow forces to help open the valve the effect of a high rate spring can be reduced and the gradient be kept relatively flat.

Figure 1 shows a section through a typical relief valve where the poppet design allows for a relatively low pressure rise due to increase in flow. A problem with this type of valve is that too much flow can cause the valve to have a negative pressure rise causing the valve to go unstable with fluctuating pressure.

The re-seat and repeatability of the valve depends upon the hysterisis. Internal seals cause friction against the bore as the valve tries to close. If a seal is under pressure then the hysterisis increases, graph 2.

Graph 1. Basic relief curve

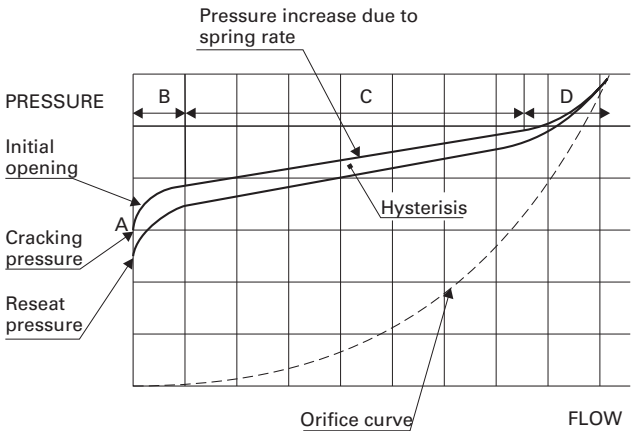

Figure 1. 1DR30 Direct acting poppet

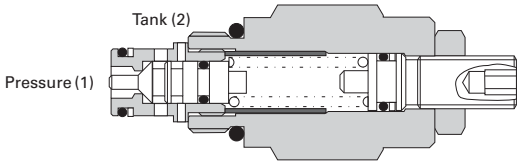

N

Graph 2. Relief Curve showing the effect of hysterisis

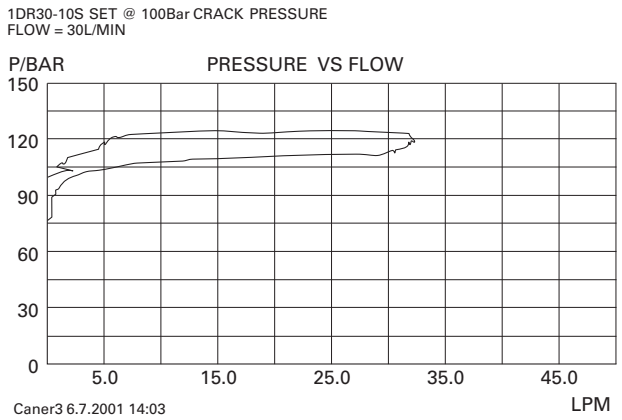

Figure 2. 1AR100 pilot operated spool

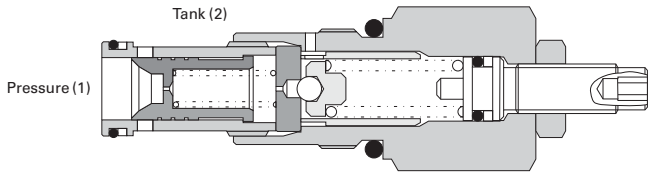

A poppet valve should not leak more than 1/3 cc/min up to the cracking pressure allowing it to be placed in a line where low leakage is important, and performing duties such as a service line relief.

A simple relief valve like this will give cost effective relief protection to small systems or where the valve is not the main pressure control but a pressure limiting device.

They are not generally suitable for high flows because the spring would have to be of excessively high rate which would give an unacceptably steep relief curve.

Figure 2 shows a typical pilot operated, spool type relief valve that gives good control over varying flows. This valve, due to its design, allows a high flow to pass with very little rise in inlet pressure. The valve has a good re-seat and good repeatability due to there being no internal seals. A pilot operated relief valve is suitable as a main pressure control but due to the two stage design it is not suitable for safety applications where speed of operation is important. In the case of a rapid increase in inlet pressure the system will be subject to a longer pressure spike than if a direct acting valve where used.

Increasing the flow capacity of a direct acting valve by reducing the area over which the pressure acts is possible, figure 3 shows a differential area poppet type relief valve that has the capability of very fast action and a high flow capacity for its size. The internal seal is subject to inlet pressure so the valve will display relatively poor re-seat characteristics.

Graph 3. Comparison of Pilot and direct acting differential area type opening curves

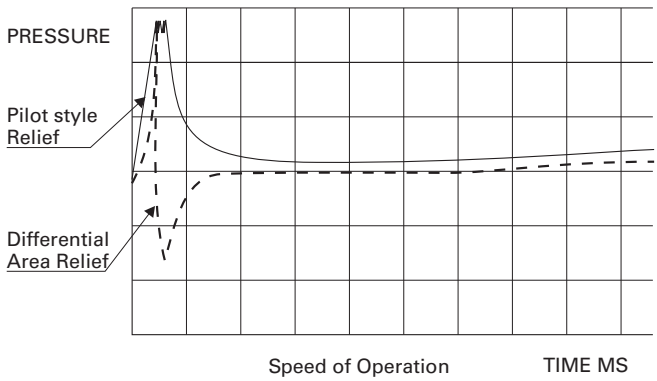

Figure 3. 1LR100 direct acting differential area

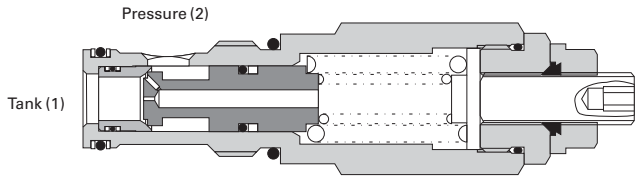

Graph 4. Opening characteristics of pilot style relief

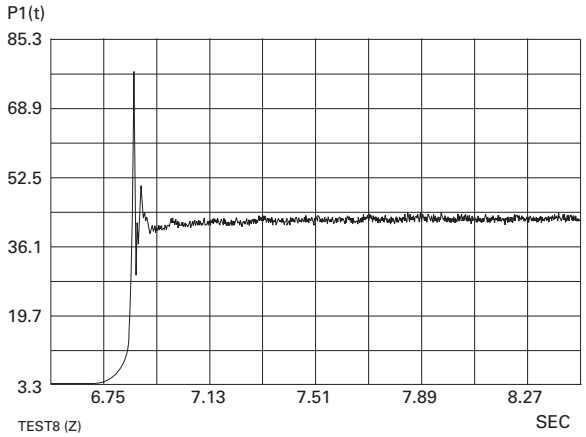

Figure 4. 1GR60 Direct acting spool

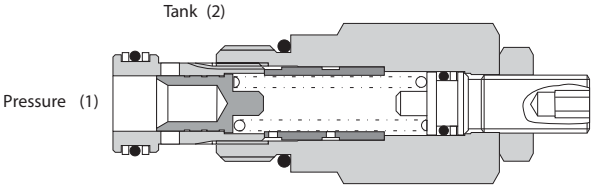

The design of the poppet is such that as the valve begins to open the flow past the poppet draws oil from the spring chamber (by venturi effect over the small holes in the poppet annulus) causing initial over opening. This removes most of the pressure spike. The valve is therefore highly suitable as protection for actuators.

Graph 3 shows a comparison between the typical opening characteristics of a pilot style valve and a differential area direct acting valve with the special poppet described above. The difference between the opening characteristics of a pilot style relief valve and a direct acting spool type relief valve are shown in graph 4 & 5 respectively, graph 4 clearly illustrating the pressure spike permitted by the pilot style valve.

Figure 4 shows a spool type direct acting relief valve. These are suitable for low pressure systems where stable or constant operation is required. They provide quiet operation even with fluctuating pressures. The spool opens up a ring of holes in the sleeve that gives a more gradual increase in flow area than a poppet valve.

Spool valves will give between 50 and 100cc/min leakage before they open.

The four main types of relief valve as detailed above cover most applications but there are many variations on a theme that give flexibility to a systems design.

Ventable relief valves, figure 5, are used to provide an unloading function, presenting an ability to be remotely operated and the possibility of switching between more than one pressure.

Unloading relief valves or 'kick down' valves, figure 6, provide an off load of pressure when the setting is reached, the valve remains fully open until the pressure falls to zero. This removes any force created by an actuator that could cause mechanical damage within a system.

In order to simplify the design of a circuit and reduce its cost system designers frequently require a valve to perform additional functions, two such valves are shown below, figure 7 a relief valve in conjunction with bypass check and figure 8 a cross line relief valve.

When designing hydraulic systems it is important to consider the performance of the minor components such as relief valves. These may be minor in cost but they have a major impact in terms of value. A poor relief valve can effect the efficiency and life of a complete machine

From overall pressure control to actuator protection the relief has to be of the correct type to ensure sound performance and component integrity.

There are also electrically controlled proportional valves available that tie in with electronic systems. That is another subject but they should never be allowed to replace the humble mechanical relief valve, the correct application of which can permit a machine to operate to its optimum performance over a long period.

Graph 5. Opening characteristics of direct acting relief

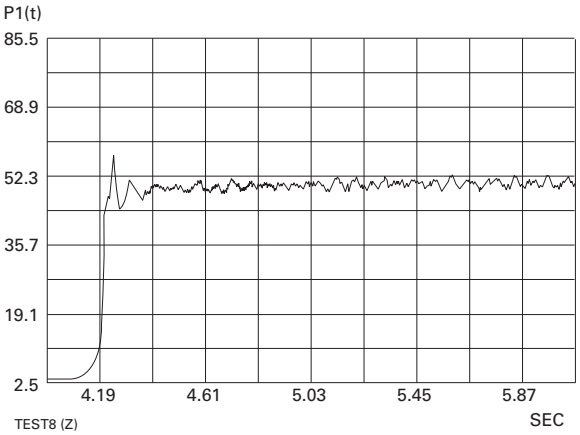

Figure 5. 1VR100 Ventable relief

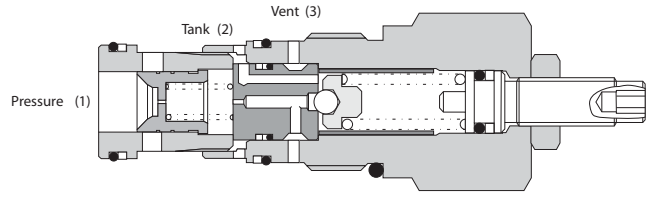

Figure 6. 1UAR100 Unloading relief

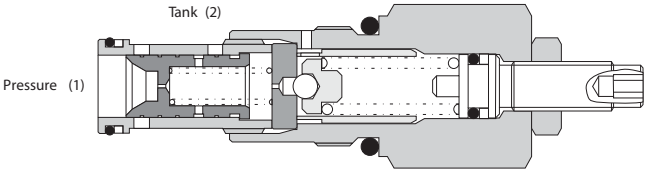

Figure 7. 1ACR100 Relief combined with by-pass check

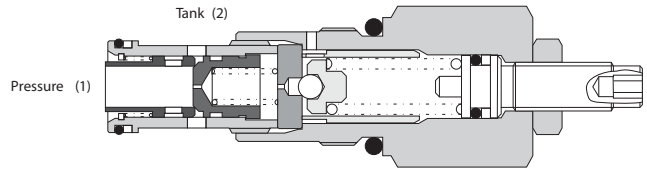

Figure 8. 1CLLR50 Dual relief

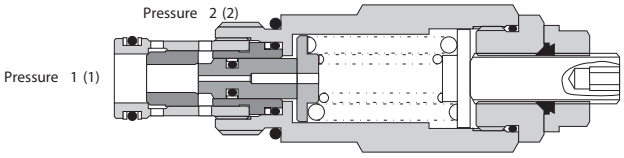

N

Highway hydraulics

Article of Interest

Anyone who has attempted a long journey in a car will notice that the flow of traffic affects how quickly and safely you arrive at your destination. There are various ways that highway agencies seek to control these two elements. Speed cameras slow drivers down to enhance safety, variable speed limits keep the traffic flow at a constant and diversions limit the weight of traffic on any road. Some of these measures are more effective than others.

It would be great if we could accurately predict the time it takes to get from 'A' to 'B'. Unfortunately due to restrictions and accidents our journeys become more difficult and less efficient. Thankfully we do not have to deal with the random variables caused by human frailties when utilising hydraulics within a machine provided the designer uses the best available flow control valves within his system.

In hydraulics it is important to control the flow of oil to augment the safety and efficiency of a machine. The results will vary depending on the accuracy and repeatability of the valves used. It is important to understand the function and operation of the different types of flow regulator before applying them; from the simple needle valve to the proportional pressure compensated priority device. Each type has its place and there are applications that warrant the differing complexity.

We understand that flow takes place from high pressure to low pressure and the amount of flow is dictated by the pressure difference. By introducing restrictions into the line we can control the flow provided the excess flow is given a means of escape.

With a needle valve the flow will not be controlled until the inlet pressure reaches a point at which an upstream relief valve opens or a pump compensator operates to reduce the inlet flow and maintain a balance. The flow across a needle valve depends on the pressure difference across it so changes in outlet pressure will have an impact on the controlled flow. To overcome this problem compensators of various guises are introduced into the system.

There are three main types; Restrictive style, By-pass style and Priority style. The restrictive style flow control consists of a needle valve and compensator element. The compensator can be situated after the needle valve (See figures 1 & 4). Fluid pressure at the high-pressure side or inlet to the needle valve is sensed on one end of the compensating spool and pressure at the lower pressure side or outlet is sensed by the other end of the same spool. This spool is usually offset to the open position by a spring. The flow through the valve is determined by the position of the needle as the compensator will always ensure that pressure drop across the needle is constant, usually 7 bar. Opening the needle will permit the flow to rise until the pressure drop exceeds the setting of the compensator causing it to shift closing a ring of holes in its sleeve and thus limiting the flow.



Figure 1. Restrictive type flow regulator

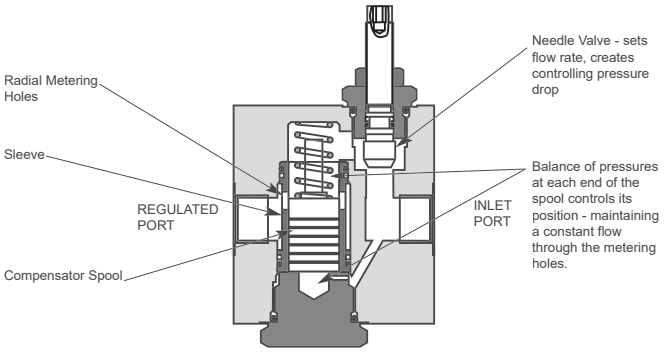

Figure 2. By-pass type flow regulator

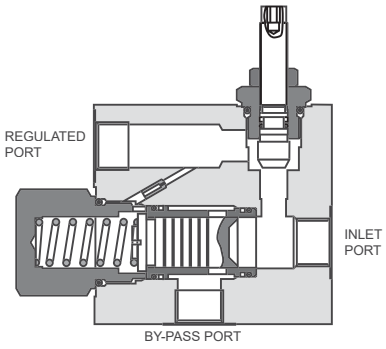

Figure 3. Priority type flow regulator

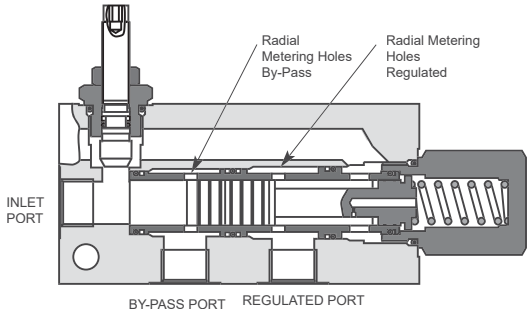

N

As the flow through the valve will be lower than the flow being delivered by the pump the inlet pressure will rise to a point where an upstream relief will open feeding excess flow to tank or a pump compensator backs off reducing the inlet flow to that required to satisfy the flow setting of the flow regulator.

The by-pass style of flow control (Figure 2 & 5.) again consists of a needle valve and compensator element but has a third port to allow the excess flow to pass to tank at working pressure as opposed to maximum relief valve setting in the case of the restrictive style. The compensator spool is biased closed by a spring, inlet pressure acts to open the spool against the action of the spring and pressure downstream of the needle valve acts to close the spool in the direction of the spring. Flow through the compensator spool goes to tank. As the pressure drop increases across the needle valve the pressure difference is sensed across the compensator spool until it moves to open the inlet to the tank port. Increase in outlet pressure will tend to reduce the flow across the needle valve but the co-responding change in pressure drop will cause the compensator to restrict the line between the inlet and the tank line. In this way the spool will meter the bypass flow to maintain a constant controlled flow that relates to the force exerted by the spring and the orifice size created by the needle valve. With this type of flow regulator it is important that the tank line pressure is kept to a minimum as this may increase the flow through the regulated line above that required.

The priority style flow control (Figure 3 & 5.) is similar to the bypass style except that it allows the excess oil to be used for other functions even if the working pressure for this function is higher than the controlled flow pressure.

The flow from the pump enters the inlet port and passes across the needle valve, then on through the sleeve, past the compensating spool and out through the regulated port. The passage of oil across the needle valve creates a pressure difference which is sensed across the compensating spool. When the flow is sufficient to create a 7 bar pressure difference across the needle valve the compensating spool will begin to move uncovering the radial holes in the sleeve and opening up a path to the bypass port. Oil will therefore begin to pass to the bypass line. If the flow tries to increase across the needle valve, and so to the regulated port, there will be an increase in pressure difference sensed by the compensating spool causing it to move further against the spring, open further the line to the bypass port and limiting the flow to the regulated line. If the inlet flow falls below the setting of the valve the pressure difference across the needle valve will drop below the 7 bar needed to keep the bypass line open therefore the priority line is always satisfied before the bypass line opens. Changes in operating pressure on either of the two outlets will alter the inlet pressure to the higher of the two pressures (plus the control pressure which is 7 bar). If the working pressure in the regulated line is higher than that in the bypass line then the tendency would be for the flow to try to take the easy way out and flow down the bypass line. This would detract from the flow passing across the needle valve lowering the pressure difference causing the compensating spool to shift, increasing the restriction to the flow to the by-pass and reducing the restriction of the flow to the regulated line. In this way the compensating spool will maintain the regulated or priority flow at a constant level.

Figure 4. Restrictive type cartridge flow regulator

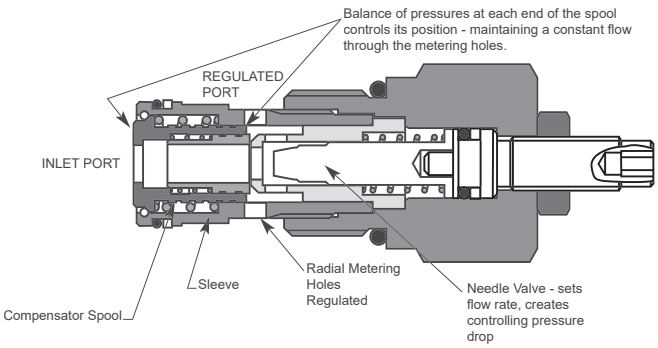

Figure 5. Priority type cartridge flow regulator also used for by-pass operation.

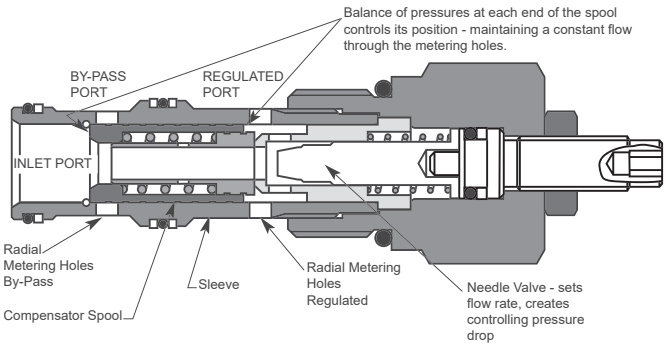

Figure 6. Restrictive type cartridge flow regulator

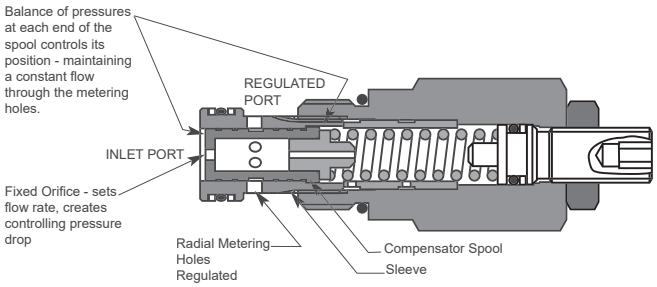

If the working pressure in the bypass line is higher than that in the regulated line then there would be a tendency for the flow to increase through the regulated line, increasing the flow would increase the pressure difference across the needle valve and cause the compensating spool to meter the regulated line.

If this is not successful then either an overcenter valve around the motor or a sequence valve before or after the actuator is necessary.

In today's environment electronic control requirements are becoming more common. To achieve this, the needle valve can be replaced with an electro-proportional valve. With electronic speed feed back, errors in the compensation can be corrected by adding electronic metering. Typical applications include salt or fertiliser spreaders where a relationship between the vehicle speed and the density of spread is required. For high flows it is sometimes necessary to use an electro-proportional pressure reducing valve to pilot open a separate orifice of some kind (figure 8.). This circuit uses a pilot operated poppet valve to provide the proportionally controlled orifice. Integrated hydraulics' zero differential valves benefit from having a shrouded seat which gives superior flow control as the poppet opens. The poppet is hydraulically balanced so it will open proportionally upon the application of pilot pressure up to 25 bar regardless of system or induced pressure.

Accurate regulation of flow is vital to the safe and efficient operation of hydraulic systems and therefore the machines on which they are used. Each application is different and will demand different control solutions and pressure compensated flow control devises, either mechanically or electronically operated, are designed to offer that accurate, cost effective, reliable and repeatable control.

Figure 7. Priority flow control with sequence valve (and unloading circuit)

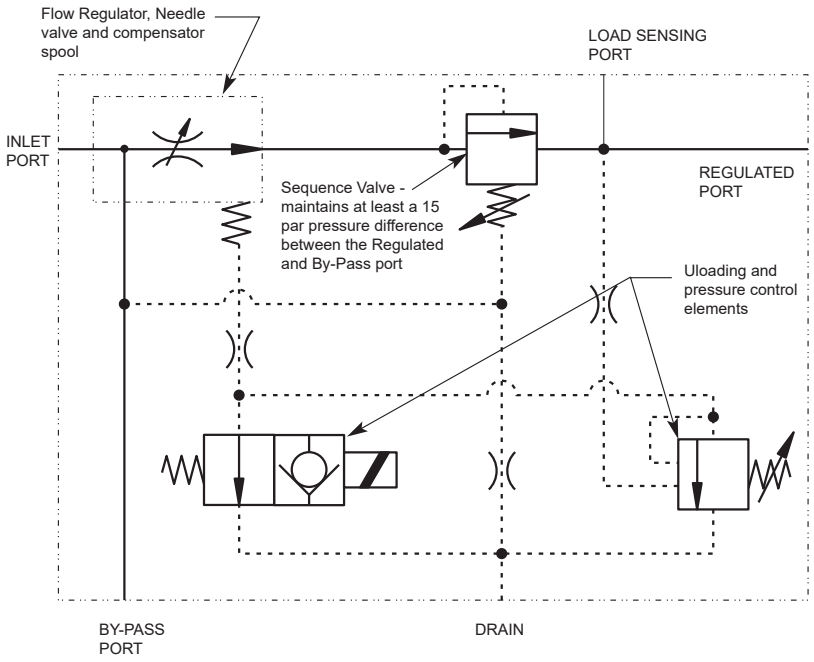

Figure 8. Proportional restrictive type flow control

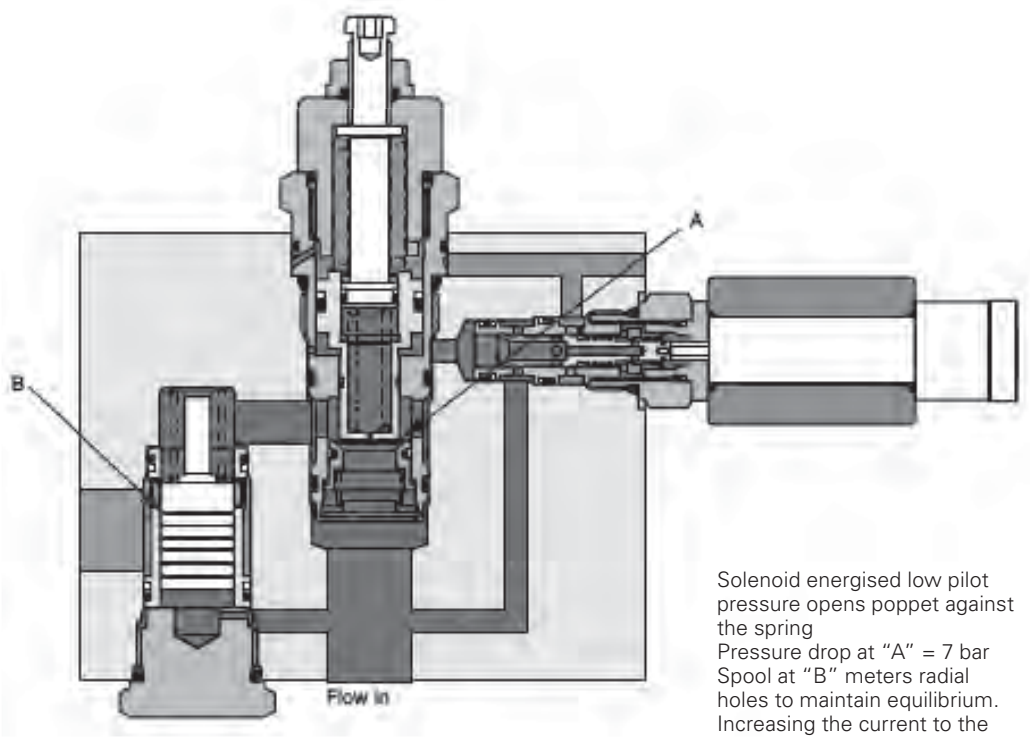

Pressure Compensated proportionally controlled flow to directional valve

Solenoid energised low pilot pressure opens poppet against the spring
Pressure drop at "A" = 7 bar
Spool at "B" meters radial holes to maintain equilibrium.
Increasing the current to the coil increases the pilot pressure which opens the poppet valve, increasing flow at which 7 bar pressure drop is generated.

N

In order for users of mobile plant to operate auxiliary equipment from the hydraulic system of the carrier so avoiding the need for an auxiliary power source accurate control of the flow and pressure is vital. The requirements of various attachments will differ both by type and manufacturer and the carriers operating system will also vary.

The following article charts the progress of several variants that solve the problem of differential pressure requirements whilst at the same time offering additional benefits. The standard Priority Flow Regulator (2FP) is the basis for a range of valves designed to provide priority flow and a bypass flow which can be used at different pressures. The setting is controlled by a simple needle valve with a compensating spool restricting the flow to the port working at the higher pressure thus maintaining the controlled flow from the regulated port. Before describing the variations in design and application it is necessary to understand the workings and performance of the standard priority style flow regulator as the normal operation of the variants (2FPH series) are the same.

2FP series priority flow regulator

The flow from the pump enters the inlet port and passes across the needle valve, then on through the sleeve, past the compensating spool and out through the regulated port. The passage of oil across the needle valve creates a pressure difference which is sensed across the compensating spool. When the flow is sufficient to create a 7 bar pressure difference across the needle valve the compensating spool will begin to move uncovering the radial holes in the sleeve and

The standard Priority Flow Regulator (2FP) is the basis for a range of valves designed to provide priority flow and a bypass flow which can be used at different pressures.

opening up a path to the bypass port. Oil will therefore begin to pass to the bypass line. If the flow tries to increase across the needle valve, and so to the regulated port, there will be an increase in pressure difference sensed by the compensating spool causing it to move further against the spring, open further the line to the bypass port and limiting the flow to the regulated line. If the inlet flow falls below the setting of the valve the pressure difference across the needle valve will drop below the 7 bar needed to keep the bypass line open therefore the priority line is always satisfied before the bypass line opens. Changes in operating pressure on either of the two outlets will alter the inlet pressure to the higher of the two pressures (plus the control pressure which is 7 bar). If the working pressure in the regulated line is higher than that in the bypass line then the tendency would be for the flow to try to take the easy way out and flow down the bypass line. This would detract from the flow passing across the needle valve lowering the pressure difference causing the compensating spool to shift, increasing the restriction to the flow to the by-pass and reducing the restriction of the flow to the regulated line. In this way the compensating spool will maintain the regulated or priority flow at a constant level.

If the working pressure in the bypass line is higher than that in the regulated line then there would be a tendency for the flow to increase through the regulated line, increasing the flow would increase the pressure difference across the needle valve and cause the compensating spool to meter the regulated line.

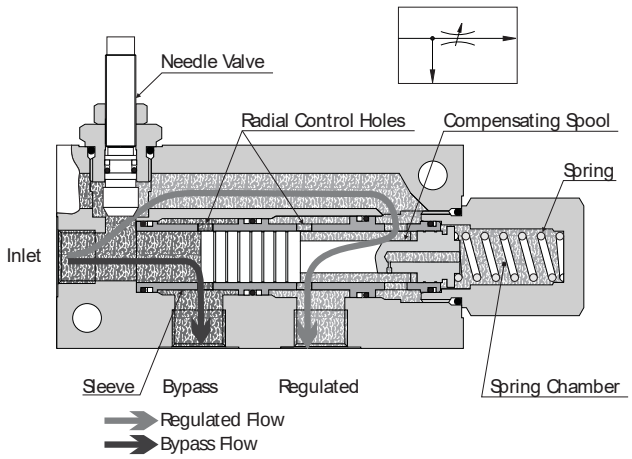

During the normal operation of any system utilizing this type of valve both the regulated and the bypass pressures will be constantly altering causing the compensating spool to meter. The valve will maintain the priority flow within +/- 10% of its setting throughout its range. The largest movement in flow will occur when pressure differential is transitional, the higher pressure varying between the bypass and regulated ports, this causes the compensating spool to move from metering one ring of holes in the sleeve to the other.

(See graph)

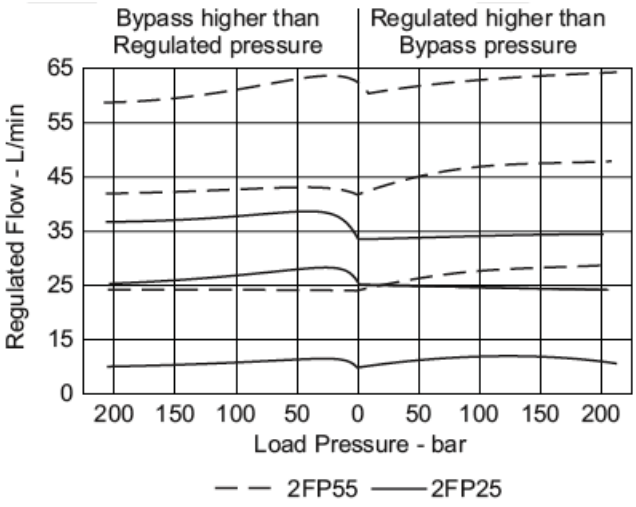

2FPH55, 95 & 195

The 2FPH series of flow regulators are based around the standard priority flow controls but with the addition of a pressure control and a solenoid vent both causing all of the flow to pass to the bypass port.

This type of flow regulator lends it's self to attachment circuits where a piece of ancillary equipment needs a controlled flow with a pressure limitation which is lower than the maximum working pressure of the carrier.

("A" in Fig 2) the compensator spool reacts by cutting ALL flow to the Regulated port, only when the pressure in the by-pass port drops below the setting of the relief will normal flow be resumed. When using this type of valve with a hammer it is an advantage to have the hammer turn off if the operator decides to put too much pressure on down stroke in an attempt to increase the speed of operation. In this way potential damage to the hammer is avoided. Energizing the Solenoid valve ("B" in Fig 2)

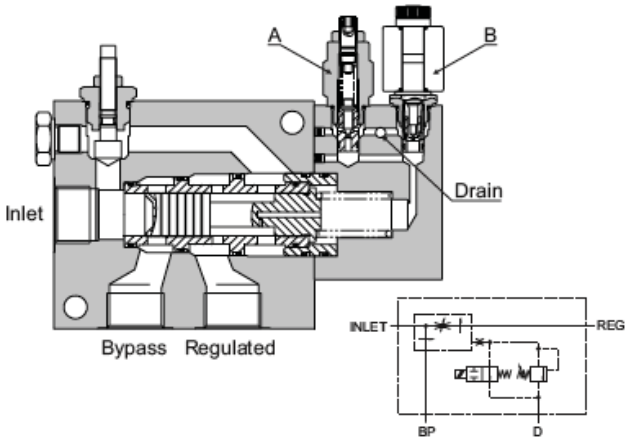

Figure 2. Priority type pressure compensated flow regulator with pressure control and overide- 2FPH55/95/195

They were originally developed for Hammer circuits where the hydraulic hammer requires a constant flow for efficient operation. There was also a pressure limit for safe operation which was well below the normal working pressure of Excavators. It was also necessary to maintain the other functions on the carrier to enable movement of the arm and the pecking action needed to fire the hammer into life. This was achieved by control of the spring chamber pressure in the standard priority flow regulators. The dampening orifice in the spool on these valves enabled the use of pilot valves which were mounted directly into the spring housing giving a very neat, compact solution. In normal operation these valves behave just as the 2FP range but if the pressure in the bypass circuit exceeds the setting of the relief valve has the same effect, venting one side of the compensator spool and causing it to block flow to the regulated port.

The range included three sizes which corresponded to the three larger sizes of priority flow regulator with rated regulated flows of 55, 95 and 195 L/min. At the time this covered the majority of the applications.

2FPH250/350

It was not long before the operators of Excavators realized that a power take off provided by this sort of valve enabled the use of more varied attachments without the extra power source and the associated pipe work. The disadvantage with the original valves was that the pressure sense for limiting the regulated pressure was referenced to the inlet. This meant that if the inlet pressure rose higher than the setting of the attachment then the valve would switch all of the flow to the bypass starving the attachment of oil. The valve therefore became limited to hammers and other high pressure attachments. The other alternative was to set the pressure control valve in the flow regulator high and fit an external relief valve on the regulated line.

Developments in Excavator control systems and also in the attachments demanded that a new design of valve was necessary. The two new additions to the range have been designed to accommodate the attachments which may require the bypass pressure to work higher than the regulated pressure while maintaining the function of the attachment. The pressure limit to the regulated line is achieved by using a pilot unloading valve ("A" in Fig 3) which senses pressure from the regulated line only. This allows the bypass pressure to rise above the regulated setting without affecting the operation of the attachment. Again in normal operation these valves behave just as the 2FP range but if the pressure in the regulated line rises above the setting of the unloading valve it will vent the spring chamber causing the compensator spool to shift cutting the flow to the regulated port. The resultant lack of flow will cause the pressure to drop, the unloading valve to close and the compensator to open the regulated port again. In practice this all happens smoothly and balance is maintained. By operating the pilot solenoid valve ("B" in Fig 3) and venting the spring chamber to tank, all of the flow will pass to the bypass port. While the valves will work perfectly adequately with hammers it will also work with generators, compactors, crushers and flail mowers. With this design it was also felt that increases in regulated flow were desirable hence the 250 and 350 L/min regulated flow rating.

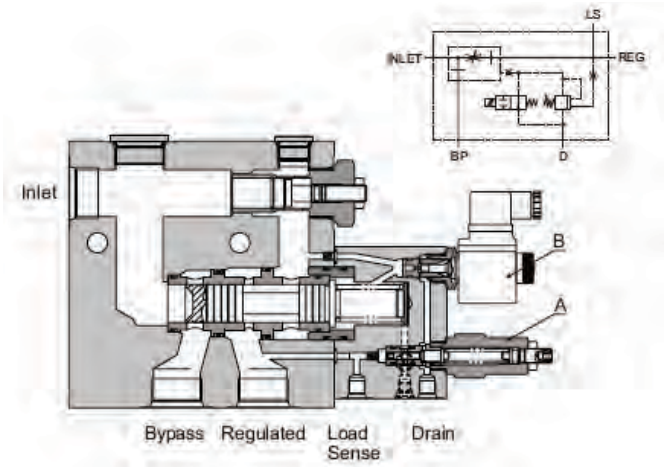

Figure 3. Priority type pressure compensated LS flow regulator with pressure control on the regulated port and overide - 2FPH250/350

In Hydraulics there is a loose rule that oil under pressure will take the easy way out! A little bit like human nature. If given the choice of an easy or difficult job most people will take the easy route. There are ways of encouraging people to be more balanced in their approach by applying a restriction to the easier task thus encouraging an equal work flow both for the difficult and the simple. This is not dissimilar to Hydraulics.

In a hydraulic system flow takes place from high to low pressure, pressure being the result of restriction to the movement of the oil. If one actuator provides less restriction than another then the former will move first. If the pressure to move the first actuator rises due to more restriction caused by the increasing flow then the second actuator may start to move but more slowly.

This can cause problems when two or more independent cylinders are required to move together. If they are unequally loaded then the cylinder that provides the least amount of resistance will move first.

There are many machines that have this problem both in linear and rotary movement including transmission circuits.

There are a number of answers to the problem but one of the simplest and most cost efficient is the humble spool type flow divider. Unfortunately misapplication of these valves can cause more system problems than solutions. In the first place it is important to understand how these valves work. Fig 1 shows a section through a typical unit.

The valve functions as a flow divider and combiner by maintaining equal pressure

There are a number of answers to the problem but one of the simplest and most cost efficient is the humble spool type flow divider.

drops through metering orifices situated in the two spools that are linked in this case by two 'lugs'. In the division mode the oil enters the valve through port '2', passing through both spools and out of ports '1' and '3'. The oil passes through the control orifices in the spools and if the flow is equal the spools remain in the central position as shown. If due to a change in outlet pressure there is a tendency for more oil to pass through one side than the other then the pressure drop rises in that side causing it to drag the other spool across eventually restricting the outlet of the higher flow side while keeping the lower flow side open.

As soon as the pressure drop through the control orifice in both spools is equal the assembly will maintain a metering position keeping the flow from both legs equal. Any change in the outlet pressures will cause the spool to move accommodating the change by metering the oil through the path of least resistance.

When the valve is being used as a combiner the spools will be pushed together as shown in 'Figure 2'. The oil then flows through the same orifices in the other direction combining out of port '2'. When there is a change in equilibrium the spools push each other to restrict the line of least resistance.

The accuracy of the valve depends on the size of the two orifices, the spring force and the leakage across the spools. If the tolerances on these items are kept to a minimum then accuracies of +/- 3% can be achieved.



N

Maintaining equilibrium

Article of Interest

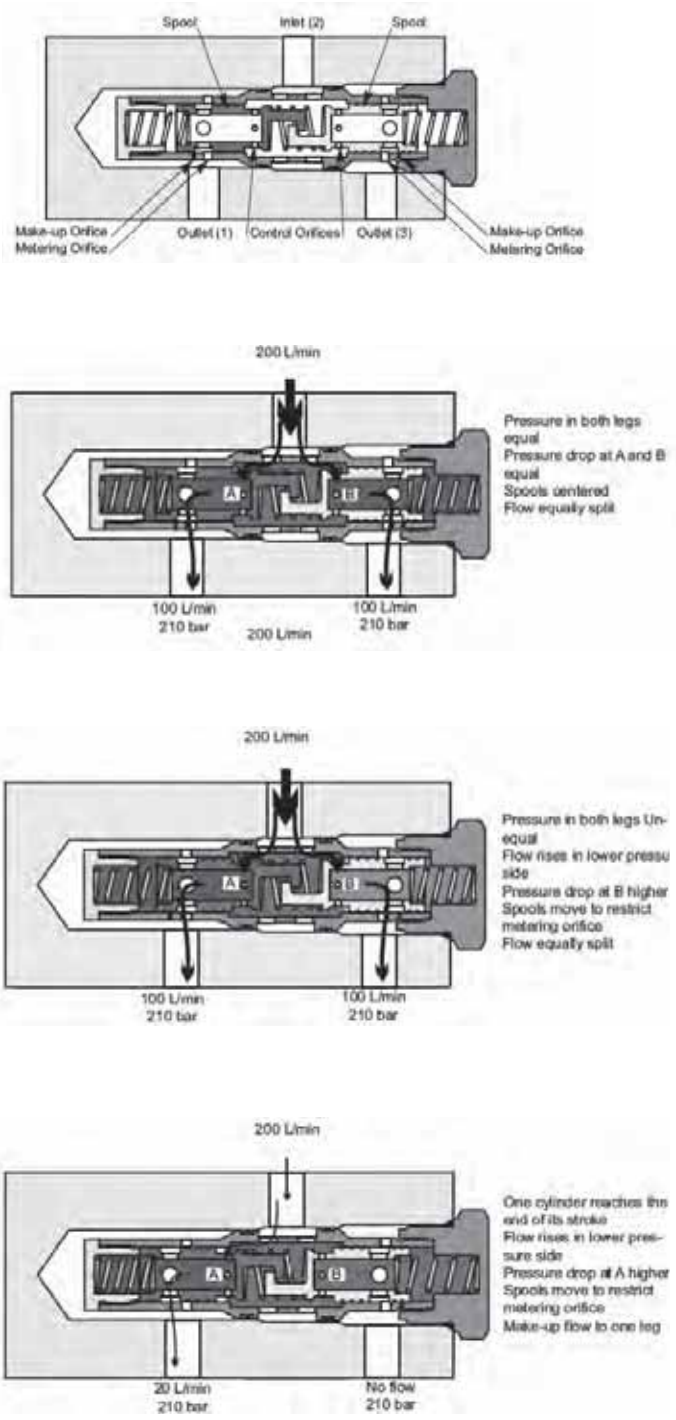

Figure 1. Flow Divider

Most production valves state an accuracy of +/- 10% on inlet flow. In some applications this can cause a problem when the cylinders are not flexible enough to accommodate this inaccuracy.

With this kind of design there is also a minimum flow at which the valve will operate. The relationship between the orifice diameter and the spring force opposing the movement of the spool means that there is a minimum flow before the spool will move and start to compensate.

If for some reason the flow from either leg is restricted then the spools will react to the offset pressure drops causing the spools to move to one end of the cartridge blocking off both outlets. This can be overcome by placing relief valves down stream of the flow divider to allow the flow to continue through a blocked or restricted outlet.

In cylinder applications the cylinders may not reach the end of stroke together. There will be a small make up flow but if relief valves are used the slower leg will catch up at 50% of the inlet flow. There are versions of flow divider that have extra holes to increase the make up flow. These however, are less accurate as the pressure difference between the two legs increases.

It is not necessary to fit flow dividers of this type on the inlet and outlet lines. The flow divider combiner will maintain equal division in both directions but care must be taken to size the flow divider to suit the outlet flow if it is in the full bore side of the cylinder as the flow will be increased by the rod/bore ratio of the cylinder.

It is not practical to cascade these valves to control more than two cylinders because the inaccuracy of the valves will be additive so you could end up with 20 to 30% difference in the flow.

It is also important that the valves are not over flowed. When in the dividing mode the pressure drop through the spools acts directly on the 'lugs', to rip the two spools apart. The normal factor of safety is 4:1 on ultimate tensile strength and as pressure drop through an orifice raise as the square of the increase in flow, so putting twice the rated flow through the valve will produce 4 times the pressure drop and probably break the 'lugs' The normal and most common division ratio is 50/50 but it is possible, by having different diameter orifices in the opposing spools, to produce offset ratios. The ratio of the orifice area in each spool will determine the offset flow ratio.

In spite of these draw backs there are many applications where the performance is good enough and therefore provide a cost effective solution to the problem of providing effective division of flow despite varying pressures in each actuator.

The accuracy of the valve depends on the size of the two orifices, the spring force and the leakage across the spools.

N

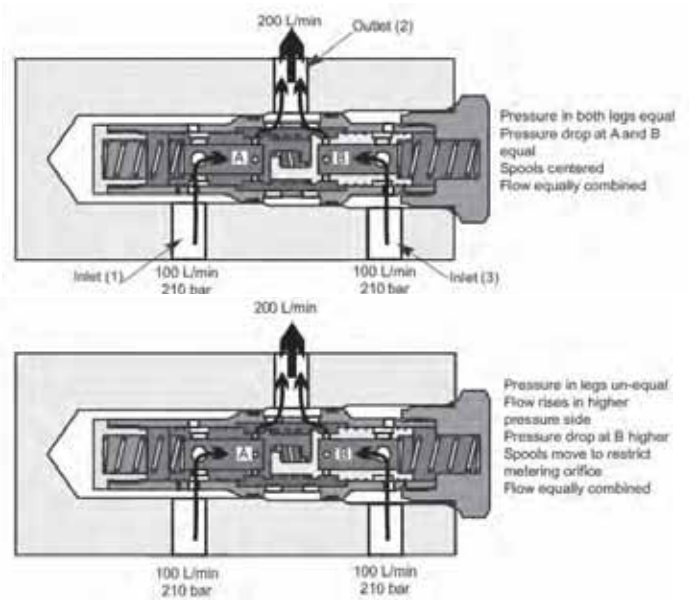

Figure 2. Flow combiner

A typical example is on the arms of a tarpaulin cover for tipping trucks. The arms, either side of the lorry, have to extend together first and then rotate together to unroll the tarpaulin and stretch it over the insecure load in the skip.

One of the most common applications for flow dividers is for wheel motors in transmission circuits to give an element of 'Diff-lock'. The flow divider will ensure that there is always traction to both wheels even when one of them is over soft or slippery ground.

Figure 3 shows a typical circuit where the flow divider is switched in when needed. The flow divider works on pressure drop so is intrinsically inefficient, even though the pressure drop is low. In a transmission circuit this pressure drop would create excessive heat so it is necessary to have a system to select the diff-lock when required.

In a closed loop transmission circuit this can be achieved by using logic elements around each side of the flow divider. They are vented when the difflock is not required. This will work in both directions because the charge pump pressure is sufficient to keep the logic element vented allowing the flow to pass backwards through the valve.

The bypass can be achieved by using pilot operated spool valves or solenoid valves. By using one of these options there is no loss of flow through the vent line however there is a limit to the flow rate that these kinds of valves can handle.

Most of these machines are required to go round corners so one wheel has to go faster than the other. As previously described this would cause problems to the flow divider. It is also true that it is not necessary to maintain a perfect division under conditions requiring diff-lock. A limited slip differential is acceptable.

It has become common place to fit an orifice across the two legs of the flow divider to allow flow to pass from one side to the other when the vehicle is turning. As the differential pressures go up due to the extra load on the inner wheel a controlled flow can pass from one side to the other. The size of this orifice depends on the turning circle of the machine. In this way one wheel will be able to move faster than the other but pressure and therefore torque will remain on both of the wheels.

There are a number of different designs of flow divider on the market including valves that have a wider range of flow. This can be an advantage if the inlet flow varies from very low to the maximum rating of the valve but at low flows there is still an inaccuracy. Some designs can cope with very low flows but as with all flow dividers they are not 100% accurate and they can cause more problems than they solve. At low flows the standard spool type flow divider will function as a simple "T" connector and it is sometimes preferable to use this feature at low flow rates and the gain their benefits at higher rates.

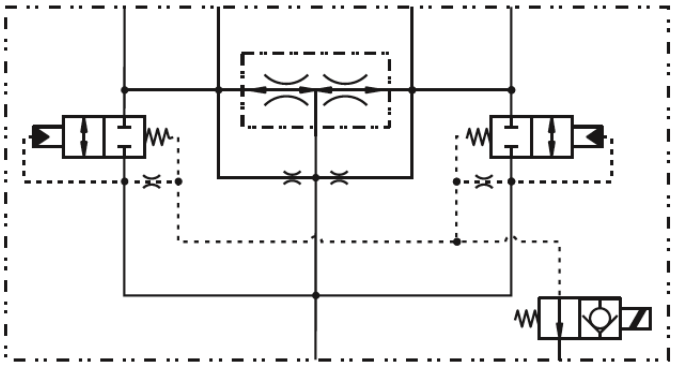

Figure 3. Difflock valve circuit

N

Maintaining equilibrium

Article of Interest

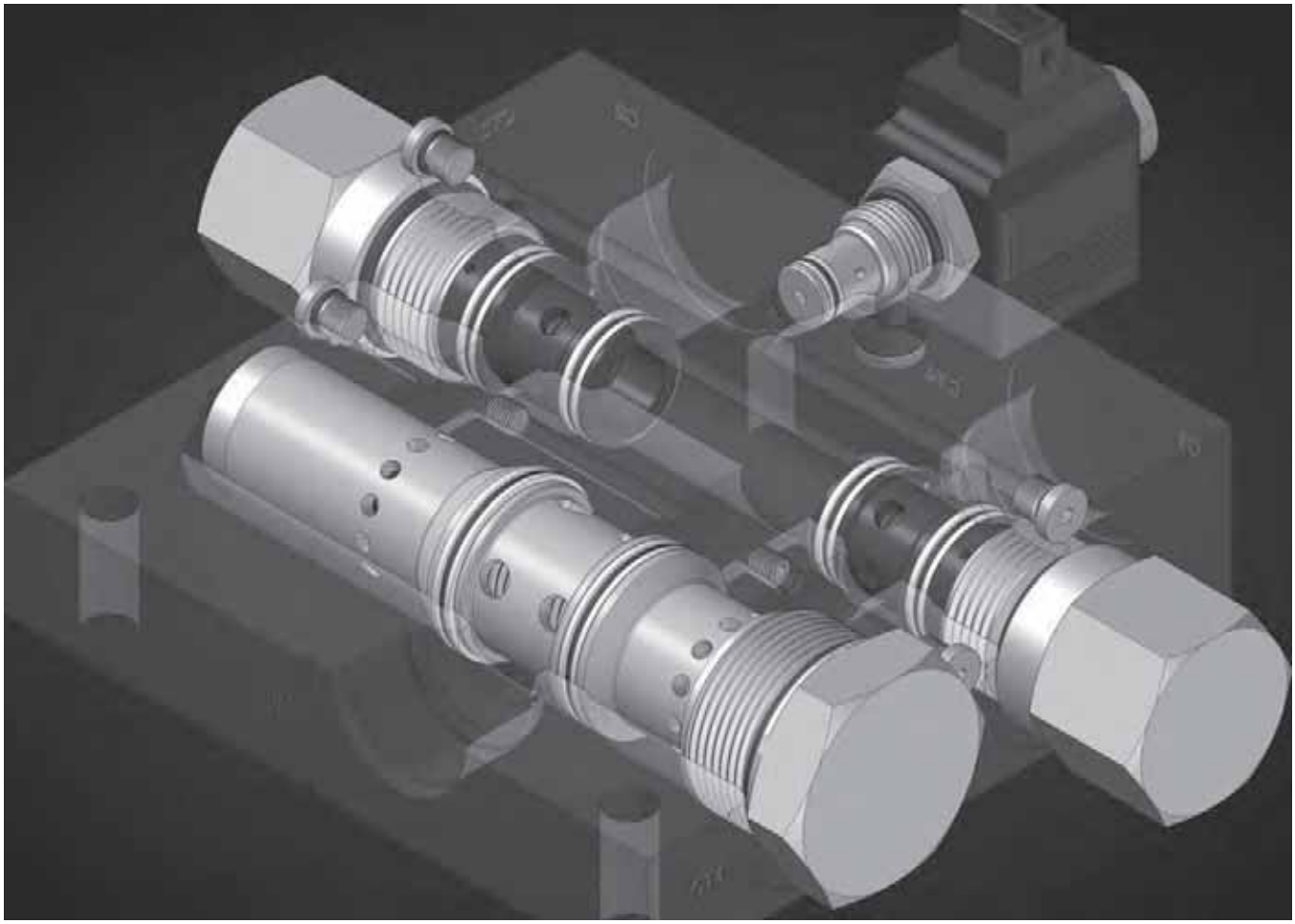

Figure 3. Diff-Lock valve including by-pass solenoid selector valves

Gear flow dividers are also available. These do not work in the same way, they are essentially two gear pumps/motors working in parallel on the same shaft. Each section will rotate at the same speed so the outlet flows remain constant from each leg. The accuracy of these depends on the leakage across the gears so is much better than the spool type. It is very important that relief valves are fitted to the outlet legs because if one leg meets a restriction the other legs will transmit their torque to the stalled line and intensify the pressure. If the gear flow divider has two sections then the pressure could double in the stalled line. If three sections are used then this pressure will triple. They do not suffer from the same pressure drop problem but are significantly more expensive.

Another way of maintaining equal movement on cylinders is the use of slave cylinders in which a number of double acting cylinders are securely and rigidly connected together at both rod and barrel and have a common inlet. Each outlet is connected individually to the inlet of the main working cylinders. (Obviously some provision for filling and maintaining the oil in the main cylinders has to be made.) As oil enters the common inlet of the slave cylinders the rods will extent together displacing fluid from each cylinder equally which operates the main working cylinders. This is a far more accurate way of controlling multiple cylinders but requires a more complicated control circuit and much more space.

A simple way of improving the accuracy and keeping the price down is to use restrictive style pressure compensated flow regulators mounted in parallel. It is important that there is always more flow available than the combined settings of the flow regulators. This solution requires the excess flow to go across a relief valve but can be used successfully with a pressure compensated pump. Each valve can be trimmed to give optimum performance.

The spool flow divider may appear to have a number of drawbacks but if we are to maintain cylinder or motor equilibrium in a cost effective manner then they are worth a look. Taking into account the point made previously proper application will give good results.

Index

Model code page references

Name	Page
02-185273	L-25
02-185274	L-25
02-185275	L-25
02-185276	L-25
02-185277	L-25
02-185278	L-25
02-185279	L-25
02-185280	L-25
02-185281	L-25
03ABCE	L-24
03ABCK	L-10
03ACE	L-24
03ACK	L-10
03BCE	L-24
03BCK	L-10
05ABCE	L-58
05ABCK	L-58
05ACE	L-58
05ACK	L-58
05BCE	L-58
05BCK	L-58
13 Type 2	A-960
13 Type 3	A-960
13 Type 4	A-960
16 Type 1	A-970
16 Type 2	A-970
16 Type 4	A-970
16 Type 6	A-970
1AR100	E-160
1ARC100	E-200
1ARD100	E-176
11CBE150	F-270
1CBE35	F-160
1CE120	F-230
1CE140	F-280
1CE20	F-100
1CE2K95/1CEE2K95	K-473
1CE30	F-110
1CE300	F-310
1CE356	F-350
1CE90	F-170
1CEB120	F-240
1CEB30	F-130
1CEB300	F-320
1CEB90	F-190
1CEBD120	F-250
1CEBD30	F-160
1CEBD300	F-330
1CEBD90	F-200
1CEBL151F4W35P	F-670
1CEBL153F4W35P	F-680
1CEBL256	F-600
1CEBL31F1/2635P	F-640
1CEBL31F3W35P	F-630
1CEBL31F4W35P	F-650
1CEBL356	F-610
1CEBL556	F-620
1CEBL91F4W35P	F-660
1CEEC150	F-510
1CEEC35	F-500
1CEEC350	F-510
1CEEC95	F-500
1CEECSH150	F-540
1CEECSH35	F-520
1CEECSH350	F-540
1CEECSH95	F-530
1CEEOMP35	K-470
1CEEOMS95	K-480
1CEESH150	F-490
1CEESH35	F-470
1CEESH350	F-490
1CEESH95	F-480
1CEESHOMP35	K-490
1CEESHOMS95	K-500
1CEH30	F-112
1CEH90	F-172
1CEHT35/1CEEHT35	K-471
1CEL140	F-300
1CEL30	F-140
1CEL90	F-210
1CEOMP35	K-470
1CEOMS95	K-480
1CER140	F-290
1CERH30	F-122
1CERH90	F-182
1CER30	F-120
1CER90	F-180
1CESH2K95/1CEESH2K95	K-420
1CESHHT35/1CEESHHT35	K-410
1CESHOMP35	K-490
1CESHOMS95	K-500
1CEH30	F-112
1CEH90	F-172
1CEHT35/1CEEHT35	K-471
1CLLR100	E-370
1CLLR50	E-360
1CLLROMP150	K-450
1CLLROMS150	K-460
1CPBD120	F-260
1CPBD30	F-150
1CPBD300	F-340
1CPBD90	F-220
1DR2	E-100
1DR30	E-110
1DR30-**-A311W	L-8
1DS100	E-500
1DS30	E-490
1DS60	E-480
1GR100	E-300
1GR30	E-290
1GR60	E-280
HP10	J-80
1HP7	J-70
1LR300	E-260
1PA100	E-630
1PA200	E-650
1PDC5	E-660
1PS100	E-520
1PS200	E-540
1PS60	E-510
1PSC100	E-560
1PSC30	E-550
1PUL200	E-350
1PUL60	E-340
1RDS702	D-560
1SB10	D-540
1SB304	D-550
1SE140	F-440
1SE30	F-360
1SE90	F-400
1SEB30	F-380
1SEB90	F-420
1SEL140	F-460
1SEL30	F-390
1SEL90	F-430
1SER140	F-450
1SER30	F-370
1SER90	F-410
1SH10	G-390
1SH60	G-392
1T162W6S	J-85
1UAR100	E-270
1UL255	K-380
1UL60	E-330
1UPS100	E-570
1VR100	E-310
1VR200	E-320
2CFD200	H-650
2CFD50	H-640
2CFP60	H-250
2CFRC60	H-160
2CR80	H-340
2FPH195	H-550
2FPH250	H-580
2FPH350	H-590
2FPH55	H-560
2FPH95	H-570
3CA20	G-110
3CA300	G-190
3CP2	D-320
4CK120	G-270
4CK30	G-240
4CK300	G-280
4CK90	G-250
4CKD90	G-260
4CKKT50	G-340
4KD25N2WS3	G-350
4SK140	G-320
4SK30	G-300
4SK90	G-310
5CK120	G-370
5CK30	G-360
5CK300	G-380
ADV1-16	E-580
C13H12/22	C-3
C16H12/19	C-4
C16H12/29	C-4
C16H24/19	C-4
C16H24/29	C-4
CBV*-10-*-2K	K-420
CBV*-10-*-H	K-410
Coils	C-1
CRV-10	K-300
CRV-16	K-310
CV11-12	G-160
CV11-16	G-170
CV1-16	G-170
CV13-10	G-140
CV16-10	G-150
CV2-20	G-180
CV3-10	G-140
CV3-10-*-P-A308T	L-10
CV3-10-*-P-A314A	L-10
CV3-10-*-P-A314B	L-11
CV3-10-*-P-A317T	L-11
CV3-10-*-P-A324P	L-10
CV3-16-*-P-A321P	L-11
CV3-4	G-120
CV3-8	G-130
CV3-8-*-P-A307A	L-10
CV3-8-*-P-A307B	L-11
CV3-8-*-P-A307P	L-10
CV3-8-*-P-A307T	L-10
CV3-8-*-P-A320T	L-11
CV6-10	G-200
CV6-16	G-210
DPC2-8	G-330
DPS2-8	I-100
DPS2-10	I-110
DPS2-12	I-120
DPS2-16	I-130
DPS2-20	I-140
DSV1-10	G-400
DSV2-4	G-410
DSV2-8	G-420
DSV2-8-*-B-A309W	L-11
DSV3-XX-B	G-430
DSV4-10	D-860
DSV4-12	D-866
DSV4-16	D-868
Eaton EN490	C-2
EFV1-10-C	B-190
EFV1-10-O	B-210
EFV1-12-C	B-200
EFV1-12-O	B-220
EFV2-12-C	B-250
EFV2-12-O	B-260
EPRV1-10	B-324
EPRV1-16	B-330
EPRV2-8	B-320
EPRV3-10	B-326
EPV10	B-104
EPV10-**-A313P	L-13
EPV16-A	B-110
EPV16-B	B-110
ERV1-10	B-290
ERV1-10-**-A321A	L-7
ERV1-10-**-A321B	L-7
ERV1-10-**-A321P	L-7
ERV1-16	B-310

N

Index

Model code page references

Name	Page
ESV1-10-C	B-140
ESV1-10-O	B-170
ESV1-12-C	B-150
ESV1-12-O	B-180
ESV1-8-C	B-130
ESV1-8-O	B-160
ESV9-10-E	B-332
ESV9-10-F	B-333
FAR1-10	H-170
FAR1-10-**-A314A	L-12
FAR1-10-**-A314B	L-12
FAR1-10-**-A314W	L-12
FAR1-10-**-A324A	L-12
FAR1-10-**-A324B	L-12
FAR1-10-**-A324P	L-12
FAR1-10-**-A324W	L-13
FAR1-12	H-180
FAR1-16	H-190
FC-1	K-100
FC-2	K-110
FC-3	K-120
FC-4	K-130
FCV11-12	H-390
FCV6-16	H-400
FCV7-10	H-380
FCV7-10-**-A314A	L-11
FCV7-10-**-A314B	L-12
FCV7-10-**-A314W	L-12
FCV7-10-**-A324A	L-11
FCV7-10-**-A324B	L-11
FCV7-10-**-A324W	L-12
FDC11-16	H-630
FDC1-16	H-620
FDC1-20	H-660
FDC3-16	H-670
FDC3-20	H-680
FPR1	G-100
FPR1/2	G-100
FPR1/4	G-100
FPR11/2	G-100
FPR11/4	G-100
FPR3/4	G-100
FPR3/8	G-100
FR1-16	H-120
FR1-20	H-130
FR2-10	H-140
FR2-16	H-150
FR5-10	H-110
FR5-8	H-100
FRC-1	K-140
FRC-2	K-150
FRC-3	K-160
FRC-4	K-170
IRV1-10	B-280
IRV2-10	B-282
LE402	I-160
LEV402	I-170
MLV9-12-A	D-292
MLV9-12-B	D-293
MLV9-12-E	D-294
MLV9-12-F	D-295
MPV1-10	D-330
MPV3-10	D-340
MRV13-10	D-110
MRV13-12	D-120
MRV13-16	D-140
MRV14-10	D-160
MRV14-12	D-170
MRV14-16	D-190
MRV15-10	D-210
MRV15-12	D-220
MRV15-16	D-240
MRV2-10	H-320
MRV2-16	H-330
MRV3-10	D-100
MRV3-10-*-3-A326P	L-24
MRV3-16	D-130
MRV4-10	D-150
MRV4-16	D-180
MRV5-10	D-200
MRV5-16	D-230
MRV6-10	D-250
MRV6-16	D-256
MRV7-10	D-260
MSV11-10	D-360
MSV11-12	D-370
MSV1-12	D-350
MSV12-12	D-390
MSV13-12	D-430
MSV14-12	D-450
MSV15-12	D-410
MSV16-12	D-470
MSV17-10	D-480
MSV17-12	D-500
MSV2-12	D-380
MSV3-12	D-420
MSV4-12	D-440
MSV5-12	D-400
MSV6-12	D-460
MSV7-12	D-490
NV1-10	H-350
NV1-10-**-A324P	L-11
NV1-16	H-360
NV1-20	H-370
NV1-8	H-342
PCB-10-*-A319P	L-9
PCC1-12	K-180
PCC1-16	K-190
PCC2-12	K-200
PCC2-16	K-210
PCR-10-*-A309P	L-9
PCS13-10	H-420
PCS13-12	H-440
PCS13-16	H-460
PCS14-10	H-490
PCS14-12	H-510
PCS14-16	H-530
PCS3-10	H-410
PCS3-12	H-430
PCS3-16	H-450
PCS3-20	H-470
PCS4-10	H-480
PCS4-12	H-500
PCS4-16	H-520
PCS4-20	H-540
PDR21A	B-270
PFR11-12	H-230
PFR11-16	H-240
PFR12-10	H-260
PFR12-12	H-260
PFR12-16	H-280
PFR15-10	H-220
PFR2-16	H-270
PFR21H	B-100
PFR24A	B-230
PFR5-10	H-210
PFR5-8	H-200
PFRD/S-12	H-290
PFRD/S-16	H-300
PFRD/S-20	H-310
PFRR-10	K-230
PFRR-16	K-240
PFRR-8	K-220
POC1-10-*-2K	K-440
POC1-10-*-H	K-430
PPD22A	B-310
PRV1-10	E-590
PRV12-10	E-610
PRV12-12	E-620
PRV2-10	E-600
PRV2-10-**-A310A	L-9
PRV2-10-**-A310B	L-9
PRV2-10-**-A326P	L-9
PRV2-16	E-640
PSV10-10	E-410
PSV1-10	E-440
PSV11-16	E-542
PSV1-16	E-530
PSV2-10	E-420
PSV2-8	E-380
PSV3-10	E-460
PSV4-10	E-430
PSV4-8	E-390
PSV5-10	E-450
PSV7-10	E-470
PSV7-10-**-A316A	L-8
PSV7-10-**-A316B	L-9
PSV7-10-**-A316P	L-8
PSV7-10-**-A319A	L-9
PSV7-10-**-A319B	L-9
PSV8-10	E-400
PTS1-10	D-570
PTS11-10	D-590
PTS11-12	D-580
PTS11-16	D-610
PTS1-16	D-600
PTS1-20	D-620
PTS12-10	D-630
PTS12-12	D-640
PTS12-16	D-660
PTS13-10	D-680
PTS13-12	D-690
PTS13-16	D-710
PTS14-12	D-730
PTS14-16	D-740
PTS15-12	D-760
PTS15-16	D-780
PTS16-10	D-900
PTS16-12	D-790
PTS16-16	D-800
PTS17-10	D-520
PTS17-12	D-530
PTS2-16	D-650
PTS2-20	D-670
PTS3-16	D-700
PTS3-20	D-720
PTS5-10	D-750
PTS5-16	D-770
PTS6-10	D-890
PTS6-16	D-790
PTS7-10	D-510
PTS9-8	D-810
PTS9-10	D-820
PTS9-12	D-830
PTS9-16	D-840
PTS9-20	D-850
PUV3-10	E-576
RGV-10	K-320
RGV-12	K-330
RLV-10	K-340
RLV-12	K-350
RV1-10	E-120
RV1-10-**-A312W	L-8
RV1-10-**-A321A	L-7
RV1-10-**-A321B	L-7
RV1-10-**-A321P	L-7
RV11-12	E-150
RV1-12	E-130
RV2-10	E-190
RV3-10	E-210
RV3-12	E-230
RV3-16	E-250

N

Index

Model code page references

Name	Page
RV3A-10-**-A321W	L-8
RV3A-10-*-2K	K-400
RV3A-10-*-H	K-390
RV4-10	E-180
RV5-10	E-140
RV5-10-**-A312W	L-8
RV5-10-**-A321A	L-7
RV5-10-**-A321B	L-7
RV5-10-**-A321P	L-7
RV5-16	E-170
RV5A-10-**-A321W	L-8
RV8-8	E-208
RV8-10	E-220
RV8-12	E-240
S207	A-280
S217A	A-130
S229	A-500
S519	A-132
S520N	A-510
S521N	A-520
S525N	A-530
S526N	A-540
S541	A-720
S542	A-700
SBV1-10-C	A-176
SBV11-10-*-0-A314A	L-16
SBV11-10-*-0-A314B	L-16
SBV11-10-*-0-A314W	L-16
SBV11-10-*-0-A318W	L-18
SBV11-10-*-C-A314A	L-16
SBV11-10-*-C-A314B	L-16
SBV11-10-*-C-A314W	L-16
SBV11-10-*-C-A318W	L-18
SBV11-10-C	A-180
SBV11-10-O	A-350
SBV11-12-C	A-210
SBV11-12-O	A-380
SBV1-12-C	A-206
SBV11-8-C	A-140
SBV11-8-O	A-310
SBV12-8-C	A-120
SBV2-8-C	A-116
SCR-1	K-360
SPC2-10	G-230
SPC2-8	G-220
SRV-10	K-260
SRV-10-*C-S-A322P	L-8
SRV-10-*-O-S-A322P	L-8
SRV-12	K-270
SRV-16	K-280
SRV-20	K-290
SRV-8	K-250
SV1-10-*-3-A326P	L-24
SV1-10-3	A-550
SV1-10-4	A-690
SV1-10-C	A-146
SV11-10-3	A-560
SV11-10-4	A-710
SV11-10-C	A-150
SV1-16-C	A-220
SV11-8-3	A-480
SV11-8-4	A-660
SV11A/B-10-3	A-570
SV11A/B-12-3	A-600
SV12-10-C	A-160
SV12-8-4	A-680
SV12A/B-12-3	A-620
SV12A/B-12-4	A-800
SV13-10-C	A-172
SV13-10-O	A-340
SV13-12-C	A-200
SV13-12-O	A-370
SV13-16-C	A-230
SV13-16-O	A-400
SV13-20-C	A-244
SV13-20-O	A-420
SV13A/B-12-4	A-820
SV14-10-O	A-460
SV14-8-C	A-260
SV14-8-O	A-440
SV14-10-C	A-276
SV14A/B-12-3	A-640
SV15-10-O	A-330
SV15-8-C	A-110
SV15-8-O	A-300
SV15A/B-12-4	A-840
SV17A/B-10-4	A-780
SV17A/B-12-4	A-860
SV1-8-3	A-470
SV1-8-4	A-650
SV1A/B-12-3	A-590
SV2-10-4	A-730
SV2-20-C	A-240
SV2-8-4	A-670
SV2A/B-12-3	A-610
SV2A/B-12-4	A-790
SV3-10-*-0-A314A	L-15
SV3-10-*-0-A314B	L-15
SV3-10-*-0-A314W	L-15
SV3-10-*-0-A315A	L-17
SV3-10-*-0-A315B	L-17
SV3-10-*-0-A317T	L-18
SV3-10-*-0-A324A	L-14
SV3-10-*-0-A324B	L-14
SV3-10-*-0-A324W	L-14
SV3-10-*-0-A325P	L-13
SV3-10-*-C-A314A	L-15
SV3-10-*-C-A314B	L-15
SV3-10-*-C-A314W	L-15
SV3-10-*-C-A315A	L-17
SV3-10-*-C-A315B	L-17
SV3-10-*-C-A317T	L-18
SV3-10-*-C-A324A	L-13
SV3-10-*-C-A324B	L-14
SV3-10-*-C-A324W	L-14
SV3-10-*-C-A325P	L-13
SV3-10-4	A-740
SV3-10-C	A-170
SV3-10-O	A-320
SV3-12-C	A-190
SV3-12-O	A-360
SV3-16-O	A-390
SV3-20-O	A-410
SV3-8-C	A-168
SV3-8-O	A-318
SV3A/B-12-4	A-810
SV4-10-*-0-A315A	L-17
SV4-10-*-0-A315B	L-18
SV4-10-*-0-A317T	L-18
SV4-10-*-0-A318W	L-24
SV4-10-*-0-A324A	L-14
SV4-10-*-0-A324B	L-14
SV4-10-*-0-A324W	L-15
SV4-10-*-0-A325P	L-13
SV4-10-*-3-A326P	L-24
SV4-10-*-C-A315A	L-17
SV4-10-*-C-A315B	L-17
SV4-10-*-C-A317T	L-18
SV4-10-*-C-A318W	L-24
SV4-10-*-C-A324A	L-14
SV4-10-*-C-A324B	L-14
SV4-10-*-C-A324W	L-15
SV4-10-*-C-A325P	L-13
SV4-10-3	A-580
SV4-10-4	A-750
SV4-10-C	A-270
SV4-10-O	A-450
SV4-8-3	A-490
SV4-8-C	A-250
SV4-8-O	A-430
SV4A/B-12-3	A-630
SV5-10-4	A-760
SV5-10-O	A-322
SV5-8-C	A-100
SV5-8-O	A-290
SV5A/B-12-4	A-830
SV7-10-4	A-770
SV7A/B-12-4	A-850
SV9-10-A	A-876
SV9-10-B	A-877
SV9-10-E	A-878
SV9-10-F	A-879
SV9-8-A	A-873
SV9-8-B	A-872
SV9-8-E	A-870
SV9-8-F	A-871
SV9A-10-A	A-913
SV9A-10-B	A-912
SV9A-10-E	A-910
SV9A-10-F	A-911
SV9A-10-G	A-930
Type M	A-981
Type P	A-980
Type R	A-981
Type S	A-980
UV2-10	K-370
VF1-10	H-600
VF11-10	H-600
VF1-16	H-610

N

Notes

Notes

Notes

Notes

Notes

Notes

Eaton
Hydraulics Group USA
14615 Lone Oak Road
Eden Prairie, MN 55344
USA
Tel: 952-937-9800
Fax: 952-294-7722
www.eaton.com/hydraulics

Eaton
Hydraulics Group Europe
Route de la Longeraie 7
1110 Morges
Switzerland
Tel: +41 (0) 21 811 4600
Fax: +41 (0) 21 811 4601

Eaton
Hydraulics Group Asia Pacific
Eaton Building
No.7 Lane 280 Linhong Road
Changning District, Shanghai
200335 China
Tel: (+86 21) 5200 0099
Fax: (+86 21) 2230 7240

Eaton
1000 Eaton Boulevard
Cleveland, OH 44122
United States
Eaton.com

Eaton
© 2018
All Rights Reserved
Printed in USA
Publication No. E-VLSC-MC001-E6
January 2018

Eaton is a registered trademark.

All other trademarks are property
of their respective owners.

Powering Business Worldwide